WHRU REPLACEMENT PROJECT

VOLUME – III

OIL AND NATURAL GAS CORPORATION LIMITED
INDIA

MAIN INDEX

File No.	Volume No.	Section	Description
I	Volume II	Section 1	Background And General
		Section 2	Basic Bid Work (Scope of Work)
		Section 3	Design Criteria
		Section 4	Offshore Suggested Vendor List & List of Agencies
II	Volume III	Volume- IIIA	Functional Specifications: (General, Piping, Structure & Mechanical)
III		Volume-IIIB	Functional Specifications: (Instrumentation & Electrical)
			Inspection Requirement Table (IRT)
			Commissioning Procedure
IV	Volume IV	-	Drawings, PFDs, P&IDS, Layout, Flow Schemes

INDEX

File No.	Volume No.	Section	Description	Page No.
II	Volume III	Volume-IIIA	Functional Specifications: (General, Piping, Structure & Mechanical)	1
III		Volume-IIIB	Functional Specifications: (Instrumentation & Electrical)	910
			Inspection Requirement Table (IRT)	1284
			Commissioning Procedure	1558

WHRU REPLACEMENT PROJECT

VOLUME – IIIA

OIL AND NATURAL GAS CORPORATION LIMITED
INDIA

INDEX

VOLUME III A

Volume No.	Section	FUNCTIONAL SPECIFICATIONS	Page No.
Volume III	IIIA	GENERAL	4
		PIPING	67
		STRUCTURAL	371
		MECHANICAL	526

General Functional Specification

WHRU REPLACEMENT PROJECT

VOLUME – IIIA

OIL AND NATURAL GAS CORPORATION LIMITED
INDIA

INDEX

S/N	Document No.	Functional Specification	Revision
1	1050	General Specification For Definition	0
2	1060	General Specification For Vendor Data Requirements	0
3	2009F	Specification for “Welding & NDT”	8

GENERAL SPECIFICATION

FOR

DEFINITION

OIL AND NATURAL GAS CORPORATION LTD.
INDIA

Note: Reproduced from Rev. 0 issued earlier.

J.S.M.		**ISSUED FOR BID**	**7**	**13.01.2005**	**0**
J.S.M.	**-**	**ISSUED FOR BID**	**7**	**20.11.2001**	**0**
BY	**APPD**	**REMARKS**	**NO. OF PAGES**	**DATE**	**REV.**

CONTENTS

1.0 SCOPE

2.0 CODES AND STANDARDS

3.0 LAYOUT AND OPERABILITY

4.0 MANUFACTURERS AND VENDORS

5.0 WARRANTIES

6.0 MATERIALS OF CONSTRUCTION AND METALLURGY

7.0 SAFETY PROVISIONS

1.0 SCOPE

Specifications referred to as "General" for a specific category indicate a minimum standard of quality for materials, fabrication and/or erection of the proposed equipment. Responsibility for the proper interpretation of these specifications shall rest with appointed representatives of the Contractor and the Company. It will be Contractor's responsibility to obtain clarification from Company's representative, which in all cases shall be final and binding.

Individual specifications and/or drawings, when furnished, are to be used with the general specifications. If conflict exists, the individual specifications and/or drawings shall govern.

All equipment and materials supplied or installed under these specifications shall be installed in accordance with sound engineering principles and good fabrication and construction practice. No omission from these specifications shall relieve the Contractor from this responsibility.

2.0 CODES AND STANDARDS

All equipment and materials fabricated and installed under these specifications shall conform to the latest editions of the applicable codes and standards cited in the bid documents. No omission in the project instructions shall be construed as relieving the Contractor of his responsibility to ascertain these requirements, to perform work and furnish material in accordance with the codes specified.

3.0 LAYOUT AND OPERABILITY

The facility shall be laid out and constructed for convenience and safety of operation and maintenance. Similar equipment shall be grouped together as much

as possible so as to best conform with good engineering practice and fulfil accepted standards of process simplicity, safety and economy. All equipment shall be oriented to permit servicing in such a way as to require a minimum of dismantling. For offshore platform facilities, conservation of space shall also be taken into account.

Contractor shall provide adequate design measures to handle all predictable occurrences resulting from weather, process upsets or operational failures, or interruption of utilities. All such features shall be provided unless brought to Company's attention and a specific agreement is reached to forgo such measures.

4.0 MANUFACTURERS AND VENDORS

Evaluation and selection of Vendors shall be done from the viewpoint of both supply and maintenance, and all suppliers must be willing and capable of providing service for their goods.

No provision of these specifications shall imply rejection of a Vendor's standard designed and purchased equipment, provided this equipment is equivalent to or better than that specified and approved by Company.

All equipment shall be of proven design. Prototypes new designs, or extensive modifications of standard designs are unacceptable.

Unless otherwise specified, the naming of a specific manufacturer's product indicates, in general, a standard of quality only. An "equivalent" specification may be substituted according to the practice of the industry; however, such substitutions shall be approved in writing by Company.

5.0 WARRANTIES

5.1 Contractor shall -

Warrant all material and equipment to be free from defects in design, material and workmanship.

Warrant that all equipment will satisfy the requirements of the intended use and be suitable for the application.

Agree to repair or replace any equipment under this warranty which proves to be defective within a period of 12 months after being placed in operation, but no exceeding 18 months from the date of shipment.

Assume responsibility for obtaining manufacturer's performance warranty for all equipment purchased.

5.2 Where materials of construction or the application of equipment recommended by Contractor do not conform with the manufacturer's recommendations, the Contractor shall assume the equivalent of the equipment manufacturer's warranty and in the event of malfunction or damage resulting from this misapplication, the Contractor will not be released from this warranty.

6.0 MATERIALS OF CONSTRUCTION AND METALLURGY

Unless other wise specified, all materials and equipment shall be new. All materials supplied under these specifications shall be adequate for the proposed service. Proper consideration shall be given to their function with regard to corrosion, chemical attack and other process hazards and precautions to avoid these hazards shall be taken. Such precautions shall include but not be limited to the following.

6.1 Selection – Adequate to meet process requirements, together with foreseeable contingencies.

6.2 Heat treatment – Suitable treatment of materials to minimize corrosion, prevent hydrogen embrittlement, and for strength considerations per applicable codes.

6.3 Protective coating – Suitable as required to preserve the utility, efficiency, and appearance of the equipment under offshore operating conditions where applicable.

6.4 Corrosion allowance and safety factor – Within good engineering practice with a minimum as stated in the relevant General Specifications.

Particular attention shall be given to the metallurgy and arrangement of equipment in contact with fluid and which is likely to be exposed internally and externally to corrosive media. All phases of the process and mechanical design of the facility must be thoroughly checked to assure that unsatisfactory conditions such as freezing, plugging and /or undesirable chemical reactions will not occur.

7.0 SAFETY PROVISIONS

It is the intent of the Company that operational hazards be reduced to a mini-mum. Contractor shall use sound engineering judgment to complete an installation that will perform the required process function without compromising this aim. The platform shall be designed in accordance with API RP 14C. Recommended Practice for Analysis, Design, Installation and Testing of Basic Surface Safety Systems on Offshore Protection Platforms, latest edition.

GENERAL SPECIFICATION

FOR

VENDOR DATA REQUIREMENTS

OIL AND NATURAL GAS CORPORATION LTD.

INDIA

NOTE: Reproduced from earlier issued revision

JSM	-	ISSUED FOR BID	12	14.01.200	0
-	-	ISSUED FOR BID	-	-	0
PREPD BY	APPROVED BY	REMARK	TOTALPAGE	DATE	REV No.

CONTENTS

PROFORMA

SPECIAL NOTES TO VENDORS

Note: Contractor to complete the attached Vendor Data Requirements form as required. Contractor shall include the requirements for approval before furnishing this to Vendors. Minimum8 No. sets of dossier shall be included for the Purchaser/Consultant.

Vendor shall furnish the following data in the number of copies indicated with proposal/after purchaser order. Number of weeks indicated are following receipt of Purchase Order.

S. No.	Data/ Drawings	No. of Prints With proposal	Certified information after Purchase Order					
			For Approval			For Dossier		
			Repro-ducibles	Prints (No. of) Copies	Date needed (Weeks)	Repro-ducibles	Prints (No. of) Copies	Date needed (Weeks)
1	2	3	4	5	6	7	8	9

1. Manufacturing Schedule
2. Monthly Progress Report
3. Leaflets/ Catalogues (Main Equip. & Aux. Equip.)
4. Catalogues for Components in Vendor's scope

5. Deviation list (s)

6 Completed Data Sheets (Main/ Aux. Equip.)

7 . Auxiliary Equipment Sheet (s)

S. No.	Data/ Drawings	No. of Prints With proposal	Certified information after Purchase Order					
			For Approval			For Dossier		
			Repro-ducibles	Prints (No.of) Copies	Date Needed (Weeks)	Repro-ducibles	Prints (No.of) Copies	Date needed (Weeks)
1	2	3	4	5	6	7	8	9

7A Data & Drgs. for Couplings, Gear Boxes, Heat Exchangers, Lube Oil Tanks ect.

8. Motor Data Sheet (s) (Main & Aux.)

9. Performance Curves

10. Motor Characteristic Curves

Utility Requirements (Characteristics & Quantity)

12. Lubricants List with Specifications

13. Main P& ID'S & Bill of Materials

14. Auxiliary System (s) P&ID's & Bill of Materials, (such as lube/ seal oil, cool-ing water, Inst. air/gas diag., fuel system. unloading comp., seal, flushing/ quenching, wash water, flushing/ quenching, wash water. Fire system etc.).

15. G. A. Drawing including auxi-liary all piping including valving & Other accessories, and purchasers piping connect-ion at battery limits (Separate G. A. drgs. for Auxiliaries & aux. systems also to be give).

16. Loading Data (Main Equipment & Auxiliaries).

17. Design details of Structural base.

18. Parts list with Cross Sectional Drawings giving critical clearances for main & aux. equipments

19. Component out-Line Drawings.

20. Component cross-sectional Drawings includ-ing mech. seals.

21. Assembly draw-ings including Auxiliary Eqpt. Assembly Drawings.

22. Sub-vendor drg. with complete Bill of Materials.

23. Vessel Design Calculations.

24. Vessel Fabri-cation drawings.

25. Allowable forces and moments on nozzles.

26. Piping Bill of Material.

27. Purchaser's piping connect-ions (with flange details).

28. Complete Instru-ment and Annunciator List

29. Instrument Data Sheet with sizing Calculations.

30. Instrument Dimensional Drgs. with Mounting Details.

Instrument Tubing, Wiring & Junction Box Schedule.
Control Sche-matic including: Alarms. Trips & Interlocks Logic Diagrams with Description: Alarms, Trips & Interlocks Wiring Diagram. For all panels).

33. Impulse piping hook up with Bill of Materials.

34. Local Panel G. A. Drgs. with Fixing Details.

35. Local Panel/ Remote Panel Wiring Diagram identifying external connections.

36. Remote Control Panel G. A. Drawing with Fixing Details.

37. Dimensional Semigraphic Flow Plans.

38. Terminal Details of Interface with Telemetry Equipment.

Electrical (General Arrangement & Layout Drawings.

40. Electrical Load List

41. Electrical Scheme Drawing/Writing &

Interconnect-
ion Diagram.

42. Terminal Box Dimensional Drawings.

42A. Write up on automatic control of Turbo-Gener-ator and the same when units are run in parallel.

43. Test Certifi-cate (Instruments).

44. Mechanical Run Layout & Procedure of Main & Aux. Equp-ments.

Performance Test Layout & Procedure (Main & Aux. Equip. Systems).

45A. String test Layout & Proce-dure (Gas Tur-bine, Gear box Generator & Motor gear box main pump).

46 Layout & Procedure

of any other test(s) specified by Company. Motor gear box main pump).

46A. Layout & Procedure of any other test(s) specified by Company Motor gear box main pump).

46B. Layout & Procedure of any other test(s) specified by Company).

47. Lateral and Torsional Analysis Report.

48. Mill Test Reports.

49. Record Showing Location of Heat Numbers.

50. Test Certificates/records for all non-destructive tests specified in spec. /data sheets such as radiography, ultrasonic etc.

51. Stress Relief Charts.

52. Welding Procedures.

Inspection & Test Reports. (i.e. Hydrostatic test performance test etc.)

Manufacturer's Test Certificates for suborder item's.

Final Accept-acne Testing & performance Test Reports.

Vendor quality assurance practices

Standard & Special Tools List including tools required for overhaul/ calibration.

Installation Operating Instructions.

Maintenance Instructions.

Shop Repair Manual includ-ing Assembly

showing critical clearances.

*61. Spare Parts List (for 2 years operations)

61A. List of spare parts for First overhaul.

*62. Start-up and Commissioning Spares List.

63. Mechanical Catalogue containing all items except those marked with asterisk (*)

*64. Painting Procedure

*65. Name Plate Rubbing.

*66. List of Similar Installations.

67. G. A. drg. For fire & gas detection system of power generator unit.

SPECIAL NOTES TO VENDOR

1. The Vendor shall be held accountable for furnishing all data/drawings in proper form and quantity in accordance with these requirements. The Vendor shall also be accountable for the documentation required from his sub-vendor.

2. Each Vendor data item requested above must be identified by the Purchase Order number and equipment tag number located on the cover sheet or First page of said item and in the case of engineering drawings, on each and every drawing.

3. Any additional data/drawings required as a result of issuing supplements to a purchase order or during detailed engineering shall be furnished by Vendor and handled in the same manner as the original order.

4. All drawings and literatures shall be in the English language and the Metric Measurement System.

5. The reproducible drawings, 279 mm x 432 mm (11" x 17") size and full size are to be of such quality that Clear Legible prints can be made with Osalid type reproduction facilities.

FUNCTIONAL SPECIFICATION

FOR

"Welding & NDT"

Prepared / Revised By	Reviewed By	Approved By	Total No. of Pages	Date	Rev. No.
			36	28.04.2016	8
Goutam Jana	M.R.Shete	S.C. Jain			

Revision Status Record

G.JANA	M.R.Shete	S.C.JAIN	36	28.04.2016	8
MKV/DB	PNN	CBS	36	26.05.2011	7
PDD/PNN	SKS	JSS	24	10.01.2005	6
Prepared / Revised By	**Reviewed By**	**Approved By**	**Total No. of Pages**	**Date**	**Rev. No.**

TABLE OF CONTENTS

Section	Content	Page No.
1.0	Scope	4
1.1	Regulatory Considerations	4
1.2	Abbreviations	4
1.3	Quality Assurance	5
PP2.0	PIPING & PRESSURE VESSELS	10
PP2.1	Codes & Standards	10
PP2.2	Weld Procedure Qualification & Documentation	11
PP2.3	Welder Qualification	12
PP2.4	Production Welding	12
PP2.5	NDT Techniques	14
PP2.6	NDT Procedure	15
PP2.7	Extent of NDT Coverage	16
PP2.8	NDT Operator	17
PP2.9	Advanced UT Techniques	17
PP2.10	NDT Acceptance Criteria	18
PP2.11	Heat Treatment	18
PP2.12	Repair Welding	19
ST3.0	STRUCTURAL	20
ST3.1	Codes & Standards	20
ST3.2	Welding Processes	21
ST3.3	Weld Procedure Qualification & Documentation	21
ST3.4	Welder & Welding Operator Qualification	25
ST3.5	Production Welding	25
ST3.6	NDT Techniques	27
ST3.7	NDT Procedures	27
ST3.8	Extent of NDT Coverage	28
ST3.9	NDT Acceptance Criteria	29
ST3.10	NDT Operator	29
ST3.11	Advanced Ultrasonic System	29
ST3.12	NDT Waiting Period	30
ST3.13	Inspection of Low Fatigue Joints	30
ST3.14	Repair Welding	30
PL4.0	SUBSEA PIPELINE SYSTEM	32
PL4.1	Codes & Standards	32
PL4.2	Welding Processes	32
PL4.3	Welding Consumables	33
PL4.4	Welding Procedure Qualification	33
PL4.5	Welding and Welding Operator Qualification	34
PL4.6	Production Welding	34
PL4.7	Nondestructive Testing	34
PL4.8	Repair Welding	36
PL4.9	Other Material	36

1.0. SCOPE

This specification covers the minimum technical requirements for welding & inspection of Piping, Pressure Vessels, Structural & Subsea Pipeline work. For piping, this specification covers CS, CS NACE, SS and Cu-Ni. For piping DSS material welding & NDT, Annexure I shall be referred. This specification modifies and/or supplements the referenced codes that apply to all piping, pressure vessels, structural and pipeline welding. These requirements cover welding done at Contractor's fabrication plant, Contractor's Yard, Vendor / Supplier Premises or field installation, either onshore or offshore. This specification also covers the acceptance standards to be applied to production welds inspected by various NDT Techniques like RT, UT, AUT, MPI & LPT.

1.1. Regulatory Considerations

In addition to this specification, Contractor shall also comply with all applicable regulatory and national code requirements.

1.2. Abbreviations

AISC	American Institute of Steel Construction	NDE	Non Destructive Examination
API	American Petroleum Institute	NDT	Non Destructive Testing
ASME	American Society of Mechanical Engineers	ONGC	Oil and Natural Gas Corporation Ltd.
ASNT	American Society for Nondestructive Testing	PAUT	Phased Array Ultrasonic Testing
ASTM	American Society for Testing and Materials	PCN	Personnel Certification in NDT
AUT	Automated Ultrasonic Testing	PQR	Procedure Qualification Record
AWS	American Welding Society	PWHT	Post Weld Heat Treatment
BPVC	Boiler and Pressure Vessel Code	pWPS	Preliminary / Proposed Welding Procedure Specification
CRA	Corrosion Resistant Alloy	QA	Quality Assurance
CS	Carbon Steel	RT	Radiographic Testing
CTOD	Crack Tip Opening Displacement	SMYS	Specified Minimum Yield Strength
Cu-Ni	Cupro Nickel	SS	Stainless Steel
DCN	Design Change Note	TMCP	Thermo Mechanically Controlled Process
DCR	Design Change Report	TOFD	Time Of Flight Diffraction
DNV	Det Norske Veritas	TPI	Third Party Inspection
DSS	Duplex Stainless Steel	UT	Ultrasonic Testing
ECA	Engineering Critical Assessment	WPQR	Welding Procedure Qualification Record
FCAW	Flux Cored Arc Welding	WPQT	Welding Procedure Qualification Testing
GMAW	Gas Metal Arc Welding	WPS	Welding Procedure Specification
HAZ	Heat Affected Zone	Company	Shall mean ONGC
HRC	Rockwell Hardness		
HV 10	Vicker's Hardness (10 Kg Load)		
ITP	Inspection & Test Plan		
LPT	Liquid Penetrant Testing		
MPI	Magnetic Particle Inspection		
NACE	National Association of Corrosion Engineers		
NCR	Non Conformance Report		

1.3. Quality Assurance

QA 1.3.1 Procedures/ITP:

Before commencing fabrication / installation, the Contractor shall submit a quality plan and a set of fabrication procedures to Company for review and approval. These documents shall include the following minimum requirement:

1. Welding & Consumable Control Procedures,
2. Welder Qualification Procedures,
3. PWHT Procedures and illustration of their proposed areas of application.
4. List of proposed all type of Welding Procedures and their areas of application.
5. List of Qualified all type of Welding Procedures and their areas of application.
6. Material identification & control procedure.
7. Detailed procedures for Non Destructive Testing, Technique sheet & Inspection.
8. Procedures for control of tolerances during fabrication.
9. DCN / DCR Control Procedure
10. Material handling procedure at Fabrication shop, Yard, Offshore installation separately
11. Painting/coating procedure
12. Name of fabrication/NDT agencies involved at Fabrication shop, Yard, Offshore installation with complete address of works & respective activities/job of the project and valid ISO 9001: 2008 certificate.

The quality plan shall include brief details and the sequence of all examinations that will be performed by the Contractor. The names of the individuals responsible for the implementation of all quality assurance and quality control functions shall also be included.

The contractor shall prepare a comprehensive ITP showing the role & scope of various agencies involved in inspection and same shall be submitted for Company's review and approval before commencement of fabrication / installation activity.

Contractor shall be required to do of his own QA internal audit at least 2 times at each yard/offshore activities.

QA 1.3.2 Manpower:

All personnel involved in welding related tasks shall have adequate qualifications and understanding of welding technology. The qualification level shall reflect the tasks and responsibilities of each person in order to obtain the specified quality level. The organization responsible for welding shall nominate at least one authorized welding coordinator in accordance with ISO 14731 – Welding Coordination – Tasks and Responsibilities (or equivalent) to be present on the location where welding is performed. The coordinator shall have comprehensive technical knowledge according to ISO 14731, paragraph 6.2a or equivalent.

The Contractor shall employ sufficient number of qualified inspectors. When an item is ready for inspection, the contractor QA personnel shall inspect it first and should be satisfied before offering the same to the Company inspector.

The contractor shall give tentative inspection schedules in advance so that the Company inspectors can effectively plan for the inspection.

QA 1.3.3 NDT:

In addition to visual inspection, NDT Techniques like RT, UT (Manual UT, PAUT, AUT & TOFD), MPI & LPT are required to be used for inspection. Radiography shall preferably be with X-ray.

γ **(Gamma) ray** can be used as explained below. However, use of Cobalt 60 Isotope is not allowed.

RT/PAUT as applicable for Piping & Structural welding(CS & CS NACE) is as follows:

1.The X-ray must be used till 10mm thickness joint of Piping & Structural welding.

2. RT-Gamma ray can be used without separate permission of ONGC, from 11 mm thickness till 25mm for Piping & Structural welding joint. However the "Project specific procedure qualification" is must ..

3. Beyond 10mm in case of Piping joints, beyond 19 mm in case of Structural joints , the PAUT can be done without separate permission of ONGC . However the "Project specific procedure qualification" is must.

Only personnel certified in accordance with PCN or ASNT recommended practice SNT-TC-1A shall be allowed to carry out Non Destructive Examination. PCN is the preferred qualification.

1.The technique sheet for the referred NDT shall be prepared by the LSTK contractor. The technique sheet preferably should be concise & precise in single page separately for each type of job & each type of NDT method used.

2.The technique sheet along with NDT procedure shall have approval of PCN or ASNT -Level III qualified (respective NDT method) personal of CA /ONGC.

3.The same technique sheet shall be displayed in the laboratory/workplace by the NDT operator.

4.The NDT operator of LSTK contractor must have to demonstrate/ go for the "Project specific procedure qualification" to be witnessed by ONGC/CA/TPI for the 1st time during start of NDT techniques".

This entire point referred above shall be applicable for all type of NDT method as applicable in piping, pipeline & structural application.

QA 1.3.4 Calibration of NDT instruments:

For standardisation of calibration of instruments used for referred NDT method ,it is essential to have valid calibration certificates for all NDT instruments, Portable Gas detectors, tong tester etc. from NABL accelerated laboratories (India) or from labs which are authorised by local government bodies or from the original manufacturer of the instrument.

Further for RT regarding NDT instruments (RT machine, isotope) shall require valid permission from the local government-regulatory body at the location of use"

QA 1.3.5 *Mechanical integrity* :

Mechanical integrity of all flange joints has to be ensured in proper record.

A standard checklist for the activity along with post box-up checkup should be developed & practiced. The checklist shall include the following:

a) i) Alignment of flanges

ii) Inspection of gasket surface for possible defects such as bends or greases.

iii)Inspection of mating flanges for dirt, mechanical damage and corrosion. Use suitable solvent to clean the surface. The contact area of flanges shall be free from excess pitting and radial scratches.

iv) Ensuring the gasket is properly seated

v) Ensuring that fasteners are tightened as per tightening procedures and using specific values with well maintained tools and torque wrenches.

b) Each joint shall be boxed up and tightened by only skilled technician.

c) Ensuring right type of gaskets & fasteners etc. confirming to the specifications.

d) Ensuring that the stud & nuts are free of dirt and corrosion. The studs should be straight and threads free from nicks, burr and chips etc.

e) Checking of individual joint for any leak during commissioning/ pressure testing by special tapes, soap solution or as per relevant code."

Digital radiography in lieu of film radiography can be used with the permission from ONGC on submission &approval of following documents.

1.Past track record of the technology/vendor in offshore application on similar material (Parent & welding consumable). PO copy & performance report of the user is required.

2.Complete procedure of using the technology with specification, protection of 1st image, calibration, validation of software, Technique etc. with respect to all the relevant standard.

3. The specific training & "procedure qualification "on the subject is required to be provided to ONGC/CA/TPI free of cost.

4. For storage of data a dedicated PC of sufficient memory for entire project with viewing software etc. must be provided without extra cost to ONGC..

5. Optimum nos. of re-use of film is restricted to 150 nos. or damaged whichever is earlier..

QA 1.3.6 ISO QMS certification :

ISO QMS 9001: 2008 – *valid certification of all the agencies/ subcontractors engaged (by LSTK contractors) for NDT and fabrication/welding activities shall be required."*

QA 1.3.7 Inspection of material::

It shall be the responsibility of the contractor to inspect all materials upon receipt and to ensure that the correct grade of material has been supplied and that identification, dimensions, material quality and end preparation are in accordance with the requisite standards and specifications. Different materials shall be kept in discrete sections of the storage area and all material shall be marked in a manner that allows it to be related to the original manufacturer's certification.

Procedures for the transfer of material identification marks shall be agreed with the Company prior to the commencement of fabrication. Any material which is not readily identifiable shall be removed from the worksite and quarantined until its material grade and source can be confirmed.

QA 1.3.8 Welding machines :

Welding shall not be performed when the ambient temperature is lower than zero degree C, when surfaces are wet or exposed to rain, snow or high wind velocities, when welders are exposed to inclement conditions, or when conditions prevent required inspections.

Only welding equipment that is in good working condition and that is properly grounded shall be used. All welding machines shall be calibrated prior to commencement of fabrication and calibration certificates shall be available for O N G C Q A audits. Certification shall be valid for 6 month periods, or as per manufacturer's recommendation.

All the welding machines/transformers shall be based of ***Inverter technology*** *or better one instead of conventional transformer/rectifiers based one.*

All welding machines shall be calibrated *prior to commencement of fabrication from NABL accelerated laboratories (India) or from labs which are authorised by local government bodies of from the original manufacturer of the machines.*

All the welding cables, Grinder cables shall be free from any intermittent joints and shall have proper industrial explosion proof electrical plug-top. All used pipes for Gas- cutter shall be in good conditions with armoured & quality stamped.

QA 1.3.9 Grounding of Equipment & air strikes:

- Each welding machine and panels shall be individually grounded to the platform or portion of the platform being welded.
- No machine or panels shall be grounded to floating equipment during welding on the structure.

Arc strikes should be made in weld groove. Arc strikes on the surface of base metal shall be removed by grinding, including any hardened zone beneath the strike. Any such repair shall be visually and magnetic particle inspected.

QA 1.3.10 Welding consumables :

Company shall approve all consumables including brands. Welding Consumables shall have physical, chemical, fatigue and corrosion resistance properties comparable to base metal. Manufacturer's batch test certificate shall be submitted for each batch of consumables used. Test results shall include chemical, physical (including impact), corrosion resistance (if welding material for sour service application or with NACE requirements) & fracture toughness (if welding material or WPS with CTOD Requirements). If these batch test results are not readily available (like corrosion test results, fracture toughness etc.), contractor shall carry out additional batch testing to confirm the same.

The welding consumables which shall not be in no case of a date manufacture older than one year with effect from date of starting the fabrication.

Apart from above, prior to Production welding, the contractor has to do HIC test separately for welding consumables as guided by CA or Company."

The control of Welding Consumables shall be in accordance with a well documented procedure. This procedure shall include techniques for storage, handling, recycling and re-baking of welding consumables to ensure that the diffusible Hydrogen content of weld metal is maintained at less than 5ml per 100 g of weld metal. The procedure shall, as a minimum, be in accordance with the manufacturer's recommendations. Since a variety of welding consumables may be in use at any manufacturing location, strict control shall be exercised to prevent loss of identification or the use of incorrect weld metal.

QA 1.3.11 *Miscellaneous requirement* :

The welder and weld area shall be provided with protection during periods of inclement weather and/or excessive wind conditions. The procedures shall include means of protecting electrodes, wires, fluxes, etc. Good House Keeping is essential in the job-area

Gas shielded welding processes should generally be used only for shop fabrication or in enclosed conditions. When used outdoor, suitable windshields must be provided to allow adequate gas coverage of molten puddle.

Heated quivers or rod boxes shall be placed at each welding location when low hydrogen welding electrodes are used.

The implementation of the procedures will be audited by ONGC QA team during the phase of Design, Fabrication & Installation activity at least two times par phase. Apart from audit the surprise checking also may be carried out by ONGC QA team at any time. ONGC shall be informed about the timely corrective actions taken by the fabricator as a result of any CAR/NCRs issued during such audit.

Copies of various QA procedures shall be readily available and shall be referenced in the quality plan and shall be made available during QA audit by Company.

Welders and welding operators shall be qualified as per the applicable specification. When using welding processes which have high potential for non-fusing type defects, in addition to the NDT requirements specified in the respective Codes, bend test shall also be carried out. GMAW and FCAW are regarded as welding processes with high potential for non-fusing type defects.

Welder Qualification Tests shall be witnessed by Company representative and/or by a reputed TPI agency. The Company representative shall be advised in advance that the Contractor is conducting welder qualification to enable auditing of test facilities.

Qualification test welds shall be made on test coupons prepared in accordance with the relevant standard. Certified as per QA1.3.4, the "Amp/volt tong tester" shall be available at the Contractor's establishment at all times.

The Contractor shall be responsible for all costs, including labor and laboratory testing, associated with welder qualification tests and retests.

All welders working on the project shall wear identification cards made at contractor's cost which shall contains photograph, welders name, welder no. Procedure qualified and Company's/Engineer's representative's signature. If the fabricator has a different system for welder's identity card, same can be followed after agreement.

The period of validity of welder qualification shall be in accordance with the Standard used for qualification. A qualification can be cancelled if the welder / welding operator show inadequate skill, knowledge and performance.

No wooden planks shall be used in any stage of fabrication job as platform of scaffolding.

During fabrication at yard there must have two independent escape route for workers..

QA 1.3.12 Production Records :

At all stages of fabrication, the Contractor shall maintain all relevant production records using a recording system agreed by the Company. The records shall include:

1. Material & Welding consumable certificates.
2. PWHT Records.
3. Fit-up reports.
4. Weld visual reports.
5. Painting/top coat report with surface finish report.
6. Dimensional inspection together with NDE & pressure test records.
7. Welder & welding operator qualification.
8. Approved Isometric drawings marked with unique weld numbers / NDT Drawings.
9. Authenticated copies of NDT operator's certificates.
10. Records of any agreed deviations to the fabrication standards.

Welding Procedures shall be tested to demonstrate that acceptable welds can be made by the procedure. During WPS Qualification, the quality of welds shall be determined by both non-destructive & destructive testing as per the applicable code. Additional testing requirements specified in this specification shall also be carried out. The Welding Procedure Qualification Testing (WPQT) shall be witnessed by Company representative and also by a reputed TPI agency. Only qualified and approved WPSs shall be used for production welding.

QA 1.3.13 CTOD Testing:

1. Material subjected for CTOD Testing shall be tested and shall meet or exceed CTOD value of 0.35mm.
2. Welding consumable subjected for CTOD Testing shall be tested and shall meet or exceed CTOD value of 0.25mm.
3. WPS subjected for CTOD testing shall be tested and shall meet or exceed CTOD value of 0.20 mm.
4. CTOD testing shall be done from Govt. labs or Govt. accelerated labs with prior information to ONGC.

PP2.0. PIPING & PRESSURE VESSELS

PP2.1. Codes & Standards

The following Codes shall be the minimum acceptable standards for welding and inspection during piping & pressure vessel fabrication. The latest edition, addenda, code cases and supplement available at the time of bidding will be used. Any part of any other non-listed code referred to in these listed codes as augmentation is to be considered applicable.

ASME B31.3	Process Piping
ASME B31.4	Pipeline Transportation System for Liquid Hydrocarbons and other Liquids
ASME B31.8	Gas Transmission and Distribution Piping System
ASME BPVC Sec.VIII, Div.1	Rules for Construction of Pressure Vessels
AWS A2.4	Standard Symbols for Welding, Brazing and Nondestructive Examination.
ASME BPVC Sec.IX	Welding & Brazing Qualification
NACE MR0175	Standard Material Requirements - Metals for Sulfide Stress Cracking and Stress Corrosion Cracking Resistance in Sour Oilfield Environments
NACE TM0284	Standard Test Method - Evaluation of Pipeline and Pressure Vessel Steels for Resistance to Hydrogen-Induced Cracking
NACE TM0177	Standard Test Method - Laboratory Testing of Metals for Resistance to Sulfide Stress Cracking and Stress Corrosion Cracking in H2S Environments
ASME BPVC Sec. V	Nondestructive Examination
ASME Sec. II, Part C	Specification for Welding Rods, Electrodes and Filler Metals
ASTM E164	Standard Practice for Contact Ultrasonic Testing of Weldments
ASTM E165	Practice for Liquid Penetrant Inspection Methods
ASTM E709	Practice for Magnetic Particle Examination
ASTM E94	Standard Guide for Radiographic Examination
ASTM E384	Standard Test Method for Knoop and Vickers Hardness of Materials
ISO 14731	Welding Coordination – Tasks and Responsibilities
ASNT SNT-TC-1A	Personnel Qualification and Certification in Nondestructive Testing

PP2.2. Weld Procedure Qualification & Documentation

The Contractor shall not commence production welding until appropriately qualified welding procedures have been accepted by the Company.

A. Piping

Weld procedures including brazing procedures shall be qualified as per ASME Code Section IX & ASME B31.3

The applicable WPQT (Welding Procedure Qualification Testing) was done in last 2 years for ONGC Job dated with effect from date of starting fabrication. If it is not of ONGC project, it shall be fresh WPQT for project specific."

Such previously qualified welding procedures may be considered for use for CS & CS NACE Piping, where they comply with the present document and are appropriate to the scope of work. These WPSs should have been qualified by the same fabricator in the presence of reputed TPI agencies. New, project specific WPS shall be prepared using the old WPQT as explained above of earlier qualified WPSs as supporting documents. In this exercise, good engineering practice and guidelines given in ASME Sec. IX shall be followed and using PQRs in an arbitrary manner to support a new WPS will not be acceptable.

However, for critical applications involving the welding of CRA materials (SS, DSS, Cu-Ni, Cu etc.), previously qualified procedures are not acceptable and fresh project specific WPQT & WPS is required.

Mechanical testing of WPQT coupons for CS piping shall confirm to the requirements of ASME Sec.IX / ASME B31.3. In addition to the above requirement, hardness testing shall be performed on each test coupon. Maximum hardness value shall be 325 HV10 for normal service piping. For Sour Service piping, a maximum permitted hardness of 248 HV10 (22 HRC) shall apply. CVN (Charpy V Notch) Impact Testing of Carbon Steel Pipe work shall be performed in accordance with ASME B31.3 Table 323.2.2.

For each welding process, the welding procedures shall specify all equipment settings. The Contractor's Welding Supervisor shall check daily and record machine settings for each weld procedure used during welding activities. This record shall be available for audit by the Company representative.

B. Pressure Vessels

Welding Procedures shall be qualified as per ASME Sec. IX & ASME BPVC Sec. VIII Div.I

PP2.3. Welder Qualification

Welders shall be qualified as per ASME Boiler and Pressure Vessel Code, Section IX.

Qualification on production welds is not permitted.

A welder shall not be permitted to weld on pipe work or attachments to pipe work unless they are qualified to the procedure in use and the documentary evidence has been sighted by the Company representative.

Tack welds shall be made by a qualified welder using the same type of electrode as is used for the root pass.

The Company may request a retest of any welder at any time and from time to time during the work. If a welder fails to qualify, then at the discretion of the company representative, all non- installed welds completed by that welder shall be examined by additional radiographic tests, over and above that which would normally be required or specified in the drawings for that pipe work and the same shall be charged to the Contractor's account.

Welds not identified and recorded, or welded by unqualified welders, shall automatically be rejected. It will be the Contractor's responsibility to prove that the welds conform to the applicable Specification. This may require 100% radiography.

PP2.4. Production Welding

1. The quality of piping welding shall be such that a weld efficiency factor as defined in ASME B 31.3 of 1.0 is achieved.

2. The deposited filler metal shall match the chemistry, corrosion resistance (if required) and minimum physical properties of the parent metal when similar metals are welded.

3. Circumferential welds on pipes shall be staggered at least four times the pipe wall thickness or 25 mm, whichever is greater, apart.

4. Branch connections shall be joined to their headers with full penetration welds.

5. Backing rings, back-up rings or chill rings shall not be used.

6. Back or seal welding of screwed fittings is prohibited unless specified in the drawing or is part of the approved welding procedure.

7. Oxy-acetylene torches shall not be used for pre-heating.

8. Pipes of dissimilar materials shall not be welded to each other but shall be flanged unless otherwise approved.

9. Compressor and turbine piping, including lube and seal oil piping, and other piping requiring special cleaning as shown in the drawings provided by the supplier shall have the root pass deposited by the gas tungsten arc process. The backside of the root pass shall be purged with inert gas.

10. If the bore of the pipe is different from the bore of fittings or flanges, to which it is welded, by more than 3mm (total bore diameter), the thicker member shall be bored, taper bored or ground smooth to match the specified bore. Figure 328.4.3 of ASME B 31.3 will governs the geometry of all taper boring and beveling.

11. Coupling or other weld-on type branch connection shall be located at least 80 mm away from any weld joint.

12. When socket weld fittings or valves are used, pipe shall be spaced approximately 1/16 inch to avoid “bottoming” which could result in excessive welds stress.

13. The inside of the brazed fitting and outside of the tube shall be cleaned with sand Paper. Flux paste to be evenly applied to the joint.

14. Reinforcing pads shall be added only after external and internal visual inspection of the attachment. Reinforcing pads shall be provided with ¼” tapped weep hole. Weep holes should be plugged after welding of pads is over.

15. Exposed machined and threaded surfaces shall be protected from oxidation during heat treatment.

16. Flange bolt holes shall straddle the established horizontal and vertical centerlines of the pipe except where connection to equipment dictates otherwise.

17. Cleaning of the piping after fabrication and heat treatment shall be performed externally and internally to remove all loose scale, weld spatter, sand and other foreign materials.

18. Welding shall not be done when quality of completed weld would be impaired by prevailing weather conditions, air borne moisture, blowing sand or high winds. Windshields may be used when practical.

19. Temporary attachments to the outside of surface of the pipe shall not be made without the approval of Company. Any such attachments which are permitted shall be removed by grinding or by using Oxy – Acetylene torch to 3 mm above permanent material surface, removal of the remaining 3mm shall be by grinding, followed by MPI / DPI. Company may require an ultrasonic check to establish that the remaining wall thickness is not less than the design minimum. Arc air gouging, hammering or other mechanical means shall not be used for the removal of temporary attachments.

20. Welder shall be supplied with temple stick – thermal crayons or pended gauges so that welders and inspector can check and control the temperature of element.

21. No weld shall be coated, painted, hydro tested before it has been inspected and accepted.

22. No weld is to be cooled by quenching or by any means other than natural cooling.

23. Welding for Severe Cyclic Condition: The weld reinforcement shall be smooth and shall blend smoothly with the external surface of the pipe to minimize possible stress concentration effects.

24. Field Welding

- Where field welds are designated, the prefabricated pipe shall be cut off 150 mm longer than the dimensions shown on the pipe fabrication drawings to allow for modification then precise fit-up in place.
- Additional field fit welds may be included in a spool by the Contractor for those spots which may have restricted site access or which may be cumbersome for transportation.
- The location of field welds, where not indicated on the drawings, will be the responsibility of the Contractor.

PP2.5. NDT Techniques

NDT Techniques like RT, UT, MPI & LPT shall be used for the examination of welds as per the requirements given in this specification.

Radiography:

1. Radiography will be performed for every pipe thickness and material grouping and for each welding process and procedure, progressively throughout entire job. At least one of each type and position of weld made by each welder will be examined. A record shall be kept by the Contractor of the quality and extent of each welder's work.

2. Radiography is not required for the welds on slip-on flanges or socket welds or seal welds.

3. Fluorescent intensifying screens such as calcium tungsten shall not be used.

4. For each weld found to be defective two additional welds made by the same welder who produced the defective weld will be subjected to radiographic examination. These additional examinations will be made immediately after the defective welds is found and are in addition to the minimum examination requirements for the line class as specified in the drawings or specifications.

5. Weld repairs shall be re-examined by the same method used to detect the original defect.

PP2.6. NDT Procedure

Contractor shall prepare NDT Procedures covering all aspects of the work. NDT Procedures shall be submitted to the Company representative for review and approval. Written NDT Procedures shall be qualified as per the requirements of ASME Sec. V, in the presence of Company representative. Qualification of the NDT procedures shall be required before NDT can be performed on production welds.

A. Piping

NDT Procedures shall be prepared as per the requirements of ASME B31.3, ASME Section V and the applicable ASME Code Cases.

B. Pressure Vessels

NDT Procedures shall be prepared as per the requirements of ASME BPVC Sec. VIII Div.1 and ASME Sec. V

PP2.7. Extent of NDT Coverage

A. Piping

I. Random radiography (10%) shall be performed covering on one weld in each 10 welds for each welder on the following:

1. Water (in case of carbon steel)
2. Air
3. Chemical
4. Diesel
5. Closed & Open drain
6. Relief
7. Hydraulic Oil
8. Oily water
9. Glycol & Thermoil
10. Vent gas
11. Lube oil & Seal oil

II. 100% Radiography shall be performed on size 2” and above and 10% on below 2” for the following:

1. Crude oil
2. Jet fuel
3. Fuel gas / instrument gas
4. Process gas
5. Production flow lines (well fluid)
6. Injection water
7. Hydrocarbon (process)
8. Water (in case of 90/10 Cu-Ni)
9. H.P. and L.P. Flare lines.
10. Piping system not covered under any of the above services

III. For fillet welds and brazed joints where carrying out radiography is not possible, magnetic particle test or dye penetrant test shall be carried out. The extent of inspection shall remain same as for radiography.

All the lines which are stress relieved or have design pressure more than 50 Kg/ cm2 shall be radiographed for 100% of weld joints even if not required as per I to III

Field welded joints, which cannot be leak tested due to unavoidable circumstances & reasons shall be 100 % examined by RT and MPI/LPT.

In addition to the requirements mentioned above, for welded joints of NACE material, 100 % hardness test shall also be carried out.

Welds, which cannot be radiographed because of their location, inaccessibility, excessive & impractical radiographic exposure time required or due to safety reasons, can be examined by ultrasonic and / or liquid penetrant / magnetic particle method as applicable with permission from Company. The extent of inspection shall be the same as for radiography

B. Pressure Vessels

NDT Coverage shall be as per the requirements given in ASME BPVC Sec.VIII Div.I and the design documents.

PP2.8. NDT Operator

NDT Operator Qualification & experience records shall be submitted for Company's review. NDT Operators shall be minimum Level II qualified, PCN qualification is preferred. Skill levels of NDT Operators shall be further examined by Company through practical mock tests & written examination. Contractor shall make necessary arrangements for the same with no additional cost to Company.

PP2.9. Advanced UT Techniques

PAUT (Phased Array Ultrasonic Testing) can be used for the examination of CS & CS NACE piping welded joints with thickness beyond 10 mm for which separate permission from Company is not required. However *"Project specific procedure qualification" to be witnessed by ONGC/CA/TPI for the 1st time during start of NDT techniques..*

The permission to use PAUT will be subject to satisfying the following conditions:

1. Past track record of the agency performing PAUT shall be submitted for Company's review and approval.
2. Written PAUT Procedure shall be prepared as per the applicable code and shall be submitted for Company's review and approval.
3. PAUT Procedure shall be demonstrated and qualified as per the Code requirements and to the satisfaction of the Company in the presence of Company Representative. During the demonstration, it shall be established that the scanning technique employed covers the entire weld volume and HAZ.
4. NDT Operator Qualification records (minimum level II) including experience in PAUT shall be submitted for Company's review and approval.
5. Skill levels of NDT Operators will be further examined through practical mock tests and written tests. Contractor shall make the necessary arrangements for the same with no additional cost to Company.
6. Familiarisation and interpretation Training on PAUT shall be provided to Company's inspectors as and when required with no cost to ONGC.

7. For any ambiguous indication observed in PAUT, especially in the case of volumetric discontinuities, if ONGC desires, RT of that joint shall be carried out without any additional cost to ONGC.
8. Soft copy of scan data (A-Scan, C-Scan, Sector Scan etc.) of each joint along with the software for viewing the same shall be submitted to ONGC.

PP2.10. NDT Acceptance Criteria

A. Piping

Technique	Material	Acceptance Criteria
RT	CS , SS	ASME B31.3
	CS NACE, Cu-Ni	ASME BPVC Sec.VIII Div. I, UW 51
UT	CS, CS NACE	ASME B31.3
PAUT	CS, CS NACE	ASME B31.3 & Code Case 181
MPI	CS, CS NACE	ASME B31.3
LPT	CS, CS NACE, SS, Cu-Ni	ASME B31.3

a. Internal weld protrusion in pigged lines shall not exceed 1.6 mm.
b. Orifice flange butt weld shall be internally ground smooth and flush.

B. Pressure Vessels:

ASME BPVC Sec. VIII Div.1

PP2.11. Heat Treatment

1. Preheat and post-weld heat treatment (PWHT) shall be in accordance with ASME B 31.3. ASME B31.4,ASME B31.8 or ASME BPVC Sec.VIII, Div.I, as applicable.

2. The method and equipment used in heat treatment shall be acceptable to the Company.

3. All threaded connections shall be protected from oxidation during heat treatment and be chased or gauge checked after heat treatment.

4. Exposed machined and threaded surfaces shall be protected from oxidation during heat treatment.

5. Cleaning of pipe work after fabrication and heat treatment shall be performed, externally and internally to remove all loose scale, weld spatter, sand and other foreign materials.

6. For all welds requiring PWHT, the specified inspection and NDT shall be performed after completion of PWHT process but not before the welds have cooled to ambient temperature. NDT prior to PWHT, performed in addition to mandatory NDT following PWHT, shall be at the discretion of the Contractor. However, where defects requiring repair are located by this inspection, it shall be brought to the notice of Company.

7. Machined surfaces shall be protected by a suitable paint or compound to prevent damage from scaling during PWHT.

8. After final heat treatment, the Contractor shall identify the piping as having received PWHT. The method of identification shall be recorded on the as-built isometric and P&ID together with the other recorded information.

9. A legible heat treatment chart shall be provided to the Company. This chart must show the rate of increase of temperature, the holding temperature and time and the rate of decrease of temperature.

PP2.12. Repair Welding

If the company representative considers a weld to be grossly defective, it shall be cut out and the joint re-welded and all costs associated therewith shall be the Contractor's responsibility.

Mechanical defects such as scratches and gouges may be ground smooth provided the depth of the defect does not exceed 10% of the nominal wall thickness of the pipe.

Repair welding shall only be carried out in accordance with an approved repair procedure. Minimum Pre-heat for repair welding shall be 50^0C more than that used for production welding.

After gouging to remove the defects, the area shall be ground smooth and shall be examined with MPI to ensure that the entire defect has been removed. LPT shall be used for non- ferromagnetic materials. As a minimum, completed repairs shall be examined by the same NDT methods used for the original weld.

Only two times repairs are allowed on any welded joint.

Dents or grooves who's depth is greater than 10% of the nominal pipe wall thickness shall be removed by cutting out and replacing that length of pipe in which the defect occurs. The minimum length of a cutout shall be four times the nominal diameter or 150 mm, whichever is the lesser.

Internal weld metal projecting into the pipe on weld neck orifice flanges shall be removed and ground smooth with the pipe.

ST3.0. STRUCTURAL

ST3.1. Codes & Standards

The following Codes shall be the minimum acceptable standards for welding and inspection during Structural Fabrication. The latest edition, addenda, and supplement available at the time of bidding will be used. Any part of any other non-listed code referred to in these listed codes as augmentation is to be considered applicable.

AWS D1.1	Structural Welding Code - Steel
AWS D1.3	Structural Welding Code – Sheet Steel
AWS A2.4	Standard Symbols for Welding, Brazing and Nondestructive Examination.
AISC	Manual of Steel Construction – Allowable Stress Design. Specification for Structural Steel Buildings
API RP 2A	Recommended Practice for Planning, Designing and Constructing fixed Offshore Platforms – Working Stress Design
API Spec. 2B	Specification for Fabricated Structural Steel Pipe
API RP 2X	Recommended Practice for Ultrasonic & Magnetic Particle Examination of Offshore Structural Fabrication and Guidelines for Qualification of Ultrasonic Technicians
ASME BPVC Sec. V	Nondestructive Examination
ASME Sec. II, Part C	Specification for Welding Rods, Electrodes and Filler Metals
ASTM E164	Standard Practice for Contact Ultrasonic Testing of Weldments
ASTM E165	Practice for Liquid Penetrant Inspection Methods
ASTM E709	Practice for Magnetic Particle Examination
ASTM E94	Standard Guide for Radiographic Examination
ASTM E384	Standard Test Method for Knoop and Vickers Hardness of Materials
BS7448	Fracture Mechanics Toughness Tests
EEMUA158	Construction Specification for Fixed Offshore Structures in the North Se
ASNT SNT-TC-1A	Personnel Qualification and Certification in Nondestructive Testing
ISO 14731	Welding Coordination – Tasks and Responsibilities

ST3.2. Welding Processes

Only Gas Metal Arc (GMAW), Gas Tungsten Arc (GTAW), Submerged Arc (SAW), Shielded Metal Arc (SMAW), or Flux Cored Arc (FCAW) welding process shall be used for production welding. Other welding processes shall not be used. Automatic stud welding machines can be used for welding of studs to steel (for fixing insulation etc.).

Use of GMAW process shall be limited to the following:

a) GMAW welding shall not be exposed to air drafts greater than 8 Km/h.

b) GMAW-S can be used for groove welds in materials 10 mm or less using a procedure qualified by the contractor.

c) GMAW-S can be used for fillet welds of 20 mm or less

d) GMAW-S may be used for the root pass only in combination with SAW welding, and for the root pass in non-critical joint applications.

e) Spray transfer mode of metal deposition for GMAW is limited to the flat position. f)

Weld areas shall be blasted or ground to white metal prior to welding when GMAW or GMAW-S is used.

Use of FCAW process shall be limited to the following:

a) FCAW welding with external gas shielding shall not be exposed to air drafts greater than 8 Km/h.

b) Electrode diameters greater than 3 mm are not acceptable.

c) Self – shielded flux core shall not be used as root or fill pass beneath other processes.

d) FCAW welding shall not be used at any case for piping & structural welding during installation or otherwise in offshore environment."

ST3.3. Weld Procedure Qualification & Documentation

The Contractor shall not commence production welding until appropriately qualified welding procedures have been accepted by the Company. All weld procedures to be utilized on this project shall be qualified.

Welding procedures shall be qualified in accordance with AWS D1.1 Structural Welding Code – Steel, except as modified by this specification: The essential variable list of all welding processes shall be increased to include any change in the manufacturing process for the base metal, i..e. separate procedures are required for As Rolled, Controlled Rolled, Normalized, Quench & Tempered or TMCP steel.

Welding of thin sheet shall be as per AWS D1.3 – Structural Welding Code – Sheet Steel.

Unless otherwise specified, all welds shall be full penetration multi-pass welds.

Draft / Proposed WPS shall be agreed with the Company prior to the commencement of procedure qualification.

The applicable WPQT (Welding Procedure Qualification Testing) was done in last 2 years for ONGC Job dated with effect from date of starting fabrication. If it is not of ONGC project, it shall be fresh WPQT for project specific."

Such previously qualified welding procedures may be considered for Structural Welding where they comply with the present document and are appropriate to the scope of work. These WPSs should have been qualified by the same Contractor in the presence of reputed TPI agencies. New, project specific WPS shall be prepared using the old WPQTs as explained above of earlier qualified WPSs as supporting documents. In this exercise, good engineering practice & AWS D1.1 guidelines shall be followed and using PQRs in an arbitrary manner to support a new WPS will not be acceptable.

In addition to the testing requirements specified in AWS D1.1 following tests as applicable shall also be carried out during WPS qualification.

A. Hardness Testing

Welding procedure qualification shall include a hardness traverse of the HAZ, Weld Metal and base metal.

1. Hardness testing shall be performed along the transverse shown in Fig. 1.

2. The required hardness survey shall be tested on a suitable macro section machined from the same welded test assembly made to determine other weld joint properties.
3. The hardness surveys shall be prepared and tested in accordance with ASTM E 384, Standard Test Method for Knoop and Vickers Hardness (Hv) of Materials, using an applied load of 10 kgf.

4. Indentations shall be made along all of the transverses shown for each type of weld tested, approximately 1 mm below the surface of the base metal. In the weld metal, a minimum of three equally spaced indentations along the traverse shall be made. In the heat-affected zone, the indentations shall start as close to the fusion line as practicable. A minimum of three readings shall be taken at

each weld toe. One additional reading shall be taken at least 20 mm from the fusion line at each traverse to represent unaffected base metal.

5. The maximum hardness value obtained from any indentation shall not exceed 350 Hv. If any single value exceeds 350 Hv and a retest adjacent to the failed test also produces one or more values exceeding 350 Hv, the procedure qualification test has failed these requirements and a new test weld shall be made with some planned modifications of essential variables or techniques (change heat input, increase preheat, later bead sequence, etc.) and retest.

6. A photomacrograph of the hardness test section shall be included in the PQR clearly showing the hardness impressions.

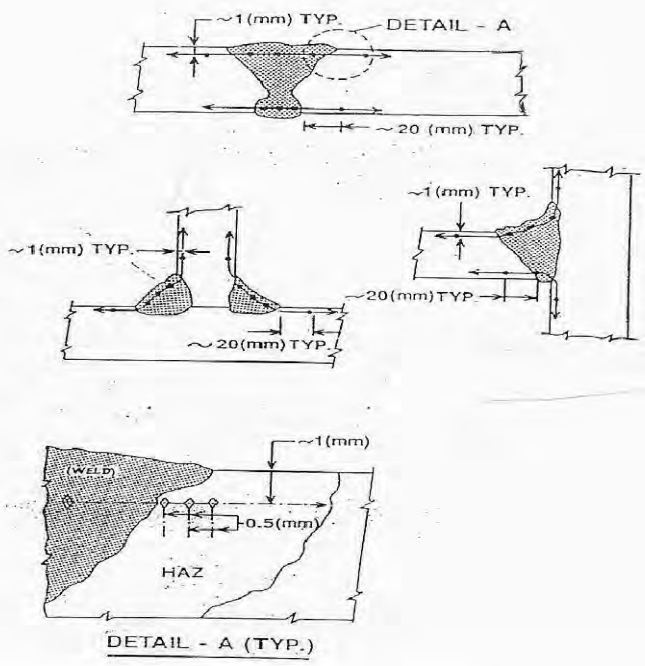

DETAIL - A (TYP.)

B. Impact Testing

All groove welding procedure qualifications for Class A ad Class B steels shall include Charpy V-notch impact testing of the deposited weld metal and the heat affected zone (HAZ). Locations for the weld and HAZ specimens shall be generally as shown in AWS D1.1, except that three sets of HAZ specimens shall be located at: (1) the fusion line (FL) (2); a position 2.0 mm into the HAZ from the fusion line (FL+2mm); and (3) a position 5.0 mm into the HAZ from the fusion line (FL+5mm) . An additional set of specimens shall also be taken from the location centred within the root pass of the weld. For acceptance the average impact energy shall meet the minimum requirement of the relevant Specification with no single value more than 6.5J lower than the average requirement. When different classes of material are to be joined the required energy level is equal to that of the lower class joined. Testing temperature shall be -10ºC.

C. CTOD Testing

CTOD testing may be used to justify an increase in the maximum thickness of material that can be welded without the application of PWHT as defined elsewhere in this Spec.

CTOD testing shall be carried out as per BS 7448/ISO15653. Each set of CTOD tests shall comprise a minimum of three valid specimens.

CTOD testing is required on full penetration test welds representing the maximum thickness of materials that are to be welded by any single process or combination of processes.

Separate tests are required to qualify single and double sided preparation.

The steel selected for performance of the test programme shall have minimum Carbon Equivalent not less than 0.02 of the maximum CE value to be used on the project. All test plates shall be welded using heat inputs representative of the highest to be used during production welding.

For each test the least values of δc, δu or δm shall be greater than or equal to 0.20mm when tested at 0^0C unless specified otherwise in the relevant drawings.

Heat Input

Charpy qualification of weld deposit and HAZ is valid only for welding procedures with heat inputs maintained with in ±25% of the tested weld. This may require more stringent tolerance on travel, speed, voltage and amperage.

In similar fashion the inter pass temperature is limited to that actually achieved and sustained during the procedure test.

ST3.4. Welder & Welding Operator Qualification

Welders shall be qualified as per AWS D1.1 Structural Welding Code – Steel. All welder qualification must have been performed on the entire weld thickness. 'Tack Welders' or 'Fillet Welders' partial qualification is not allowed. Qualification on production welds shall not be allowed.

ST3.5. Production Welding

1. **Chill rings and backing strips** can provide improved root beads on single sides welds. Their use, however is prohibited as they may cause fatigue crack initiation.

2. Unless otherwise specified, all welds shall be **full penetration multi-pass welds.** Full Penetration Welds shall be used for built-up-girders.

3. **All faying surfaces shall be seal welded**.

4. Welding shall proceed in a manner that **minimizes residual stresses or distortions**. The Contractor shall be responsible for preventing or correcting distortions. If excessive distortion becomes evident, corrective methods shall be applied as agreed with the Company Representative.

5. Welds shall **not be quenched or cooled other than by contact with the natural atmosphere. Welds shall be protected from rapid cooling caused by rain, wind, or other inclement weather.**

6. **Gas shielded welding processes (eg. FCAW, GTAW and GMAW), when used outdoor shall be provided with proper wind protection.**

7. **Pre-heat requirements**

   Welding pre-heat shall be as specified in the Qualified Welding Procedure, but shall not be less than as specified in AWS D1.1 (Table 3.2). The guidelines given in Appendix XI of AWS D1.1 shall also be taken into account and adopted as appropriate.

   If any metal is damp or less than 10°C, a minimum preheat of 38°C shall be required regardless of thickness.

Preheating shall be carried out by using Oxy-fuel bulbous type torches, induction or electric resistance heating. Oxy-Acetylene cutting torches shall under no circumstances be used for preheat application.

8. **Inter – pass temperature**

The temperature of previously deposited weld metal and surrounding base metal within 75 mm of each side of the weld and throughout the wall thickness shall meet the following requirements prior to depositing subsequent beads

Minimum – Not less than the specified pre heat.

Maximum - 200ºC or the maximum sustained and documented during procedure qualification, not to exceed 260ºC.

9. **Arc Strikes and Temporary Attachments**

Arc strikes shall be ground out and repaired. After repair, MPI shall be carried out. Temporary attachments shall be removed by grinding or by using Oxy – Acetylene torch to 3 mm above permanent material surface, removal of the remaining 3mm shall be by grinding, followed by MPI / DPI. Company may require an ultrasonic check to establish that the remaining wall thickness is not less than the design minimum. Arc air gouging, hammering or other mechanical means shall not be used for the removal of temporary attachments.

10. **Post Weld Heat Treatment**

PWHT shall be required in the following circumstances or when shown on the design drawings:

a) When fabricating tubulars with d/t ratios less than 20.

b) For nodal joints where the minimum throat thickness exceeds 40mm. c) For other areas where the minimum throat thickness exceeds 50mm.

PWHT shall be carried out for all above three cases individually for Onshore-Yard fabrication in compliance to ST 3.5-point no.11. PWHT shall be carried out for all type of non-TMCP steel. For any special steel as specified by steel manufacturer and approved by ONGC for obviating PWHT with CTOD may be considered.

However PWHT is waved off for welding during installation phase at offshore and CTOD shall be carried out with qualified PQR (fresh) per every new project & subsequent WPS (fresh) is required for structural welding. In this case (offshore) the Fracture Mechanics Assessment (FMA) , its(FMA) separate report, Crack Tip Opening Displacement (CTOD)method and its (CTOD)test report , as per BS 7448/ISO15653 shall be used to obviate the requirement for PWHT (as for all applicable cases separately for b & c only).

Fracture Mechanics Assessment Report and CTOD, as per BS 7448/ISO15653 may be used to obviate the requirement for PWHT (as per b c), if approval in writing is given by the Company. In this case CTOD test shall be carried out during the WPS qualification.

This entire clause of ST .3.5.10 shall also be applicable for welding jobs with piping.

11. **Criteria for PWHT**

All PWHT shall be performed in accordance with AWS D1.1 and the applicable welding procedure qualification.

a) The CONTRACTOR shall inform the COMPANY prior to any PWHT operation.

b) No welding shall be performed on fabrications subsequent to PWHT.

c) PWHT requirements shall be stipulated on the relevant WPS and shall comply with AWS D1.1, Section 5.8. The temperature for PWHT shall be $600^{o}C \pm 20^{o}C$ unless recommended otherwise by the steel manufacturer.

d) For all welds requiring PWHT, the specified inspection and NDT shall be performed after completion of PWHT process but not before the welds have cooled to ambient temperature. NDT prior to PWHT, performed in addition to mandatory NDT following PWHT, shall be at the discretion of the Contractor. However, where defects requiring repair are located by this inspection, it shall be brought to the notice of Company.

e) The contractor shall submit a heat treatment procedure for approval by the Company. This procedure shall define heat and cooling rate, holding time at temperature and details of temperature measurement and control methods.

f) PWHT temperature/time charts shall be clearly identified and retained for inclusion in the project records.

12. **Weld Through Primers**

Weld through primers to be used during fabrication are subject to the approval by the Company and shall be included in the weld procedure qualification. During Weld Procedure Qualification, the thickness of weld through primer shall be measured. Any increase in thickness of primer in production shall necessitate re-qualification of the affected WPS.

ST3.6. NDT Techniques

NDT Techniques which are to be used for inspection are Visual Inspection, RT, UT and LPT / MPI.

ST3.7. NDT Procedures

Contractor shall prepare detailed written NDT Procedures and shall submit the same for Company's review and approval.

Structural	Technique	Specification
Structural General	RT, MPI & LPT	ASME Sec.V & AWS D1.1
Butt & T, K, Y Joints	UT	API RP 2X
UT of Tubular – (Factory Manufactured) Long Seam	UT	ASTM E-273 or ASTM E-164 and AWS D1.1
Butt Joints	Advanced UT System	ASME Sec. V, AWS D1.1 and applicable Code Cases

NDT Procedures including equipments shall be qualified as per the requirements of AWD D1.1, API RP 2X and ASME Sec. V as applicable in the presence of Company representative.

ST3.8. Extent of NDT Coverage

NDT coverage shall be as per API RP 2A with the following modifications.

A. Structural Tubulars

Radiographic Examination shall be performed for the following welds

1. 10 % RT of Longitudinal Weld Seams (L)
2. 100 % RT of all girth welds in tubular - Circumferential Weld Seams (C)
3. 100 % RT of Intersection of long seams (L) and Circumferential Seams (C)

Inspection requirement for mill fabricated structural tubular, who are authorized to put API monogram, shall be as per the applicable code (like API 2B).

B. Tubular Joints:

1. 100 % UT & MPI of Major brace to chord welding.

2. 100% UT & MPI of Major brace to brace welding.

3. Before fit-up, UT Lamination check shall be carried out on the area of the chord where bracing will be welded to ensure that the area is free from laminations.

C. Miscellaneous Bracing

1. 10% UT & MPI of Conductor Guide Bracing

2. 10% UT & MPI of secondary bracing and subassemblies, i.e., splash zone and / or mudline secondary bracing, boat landing etc.

3. 100% UT & MPI of attachment weld connecting secondary bracing / sub assemblies to main members

D. Deck Members

1. 100 % RT of all primary full penetration welds like splices in main skid beams, main truss beams and deck beams.

2. 10 % RT of all secondary full penetration welds including secondary deck beams.

3. 100 % Visual & MPI of all partial penetration welds including fillet welds.

Chevron / Transverse crack check using UT is required for primary steel with thickness > 25 mm welded using SAW process. Scanning shall be carried out along the weld cap.

100% UT and / MPI shall be carried out on all welds in built-up girders.
Notes:

1. Partial inspection should be conducted as 10 percent of each piece, not 100 percent of 10 percent of the number of pieces. Partial inspection should include a minimum of three segments randomly selected unless specific problems are known or suspected to exist. All suspect areas (e.g., areas of tack welds) shall be included in the areas to be inspected. If rejectable flaws are found from such 10% inspection, additional inspection should be performed until the extent of rejects has been determined and the cause corrected.
2. Welds, which cannot be radiographed because of their location, geometry, inaccessibility, excessive & impractical radiographic exposure time required or due to safety reasons, can be examined by ultrasonic and / or liquid penetrant / magnetic particle method as applicable with permission from Company. The extent of inspection shall be the same as for radiography

ST3.9. NDT Acceptance Criteria

Technique	Acceptance Criteria
RT	AWS D1.1
UT – Butt & TKY Joints	API RP 2X Level C
UT – Long Seam of Mill Fabricated Tubular	API RP 2X Level A

ST3.10. NDT Operator

NDT Operator Qualification & experience records shall be submitted for Company's review. NDT Operators shall be minimum Level II qualified, PCN qualification is preferred. NDT Operators doing examination of TKY joints should have previous verifiable experience in similar job. Skill levels of NDT Operators will be further examined through practical mock tests & written examination. Contractor shall make necessary arrangements for the same with no additional cost to Company.

ST3.11. Advanced Ultrasonic Systems

Phased Array UT (PAUT)/TOFD shall be used where the thickness is beyond 19 mm, for which permission is not required from Company. However *The PAUT/TOFD used shall satisfy the following conditions which has to be established by the NDT agency during the " Project specific procedure qualification" to be witnessed by ONGC/CA/TPI for the 1st time during start of NDT techniques.*

The **PAUT/TOFD** will be used subject to satisfying the following conditions:

1. Past track record of the agency performing PAUT / TOFD shall be submitted for Company's review and approval.

2. Written UT Procedure shall be prepared as per the applicable code and shall be submitted for Company's review and approval.
3. PAUT / TOFD Procedure shall be demonstrated and qualified as per the Code requirements and to the satisfaction of the Company in the presence of Company Representative. During the demonstration, it shall be established that the scanning technique employed covers the entire weld volume and HAZ.
4. NDT Operator Qualification records (minimum level II) including experience in PAUT / TOFD shall be submitted for Company's review and approval.
5. Skill levels of NDT Operators will be further examined through practical mock tests and written tests. Contractor shall make the necessary arrangements for the same with no additional cost to Company.
6. Familiarisation & interpretation Training on PAUT / TOFD shall be provided to Company's inspectors as and when required with no cost to ONGC.
7. For any ambiguous indication observed in PAUT / TOFD, especially in the case of volumetric discontinuities, if ONGC desires, RT of that joint shall be carried out without any additional cost to ONGC.
8. Soft copy of scan data (A-Scan, C-Scan, Sector Scan etc.) of each joint along with the software for viewing the same shall be submitted to ONGC.

ST3.12. NDT Waiting Period

NDT of primary structural welded members should generally be carried out 24 hrs after completion of welding.

ST3.13. Inspection of Low Fatigue Joints

All low fatigue joints shall be inspected for acceptance to required profile and toe grinding shall be performed, if required.

Disk test shall be performed as mentioned in AWS D1.1.

ST3.14. Repair Welding

Repair welding shall be performed strictly in accordance with the qualified repair welding procedure.

<u>Removal of Defects</u>

Removal of defects for repair may be by any of the following methods: machining, grinding, chipping, or air carbon arc gouging. The method shall produce a clean uncontaminated surface for installation of the repair weld.

Gouging

Oxygen gouging shall not be used in quenched and tempered, normalized or TMCP steels. All gouges shall be ground, power wire brushed, or grit blasted to remove all traces of residual carbon and oxidation.

After gouging to remove the defects, the area shall be ground smooth and shall be examined with LPT to ensure that the entire defect has been removed.

Completed repairs shall be examined by the same NDT methods used for the original weld

Only two times repairs are allowed on any joint.

PL4.0. SUBSEA PIPELINE SYSTEM

PL4.1. Codes & Standards

The following Codes shall be the minimum acceptable standards for subsea pipeline welding and inspection. The latest edition, addenda, code cases and supplement available at the time of bidding will be used. Any part of any other non-listed code referred to in these listed codes as augmentation is to be considered applicable.

DNV OS F101	Submarine Pipeline System
BS 7910	Guide to methods for assessing the acceptability of flaws in metallic structures
ASTM E1961	Standard Practice for Mechanized Ultrasonic Testing of Girth Welds Using Zonal Discrimination with Focused Search Units
AWS A2.4	Standard Symbols for Welding, Brazing and Nondestructive Examination.
NACE MR0175	Standard Material Requirements - Metals for Sulfide Stress Cracking and Stress Corrosion Cracking Resistance in Sour Oilfield Environments
NACE TM0284	Standard Test Method - Evaluation of Pipeline and Pressure Vessel Steels for Resistance to Hydrogen-Induced Cracking
NACE TM0177	Standard Test Method - Laboratory Testing of Metals for Resistance to Sulfide Stress Cracking and Stress Corrosion Cracking in H2S Environments
ASME BPVC Sec. V	Nondestructive Examination
ASME Sec. II, Part C	Specification for Welding Rods, Electrodes and Filler Metals
ASTM E164	Standard Practice for Contact Ultrasonic Testing of Weldments
ASTM E165	Practice for Liquid Penetrant Inspection Methods
ASTM E709	Practice for Magnetic Particle Examination
ASTM E94	Standard Guide for Radiographic Examination
ASTM E384	Standard Test Method for Knoop and Vickers Hardness of Materials
ISO 14731	Welding Coordination – Tasks and Responsibilities
ASNT SNT-TC-1A	Personnel Qualification and Certification in Nondestructive Testing

PL4.2. Welding Processes

Various welding processes as given in DNV-OS-F101 can be used for production welding. If the contractor propose to use mechanized welding process, a complete description of the process including examples of previously qualified welding procedures and subsea pipeline

projects completed using proposed process shall be submitted for Company's review and approval. Mechanised and Automatic welding systems shall be subject to a detailed pre- qualification programme or documentation before they may be used. The extent and the contents of a pre-qualification programme for such mechanised welding systems shall be agreed before start up. The Contractor shall prove and document that the welding systems are reliable and that the process can be continuously monitored and controlled.

PL4.3. Welding Consumables

Welding consumables and welding processes shall give a diffusible hydrogen content of maximum 5ml / 100g of weld metal.

Cellulose coated electrodes may be used only subject to agreement for welding of Pipeline Girth welds in CS Line pipe with SMYS ≤ 450 MPa. If used, the delay between completion of root pass and the deposition of hot pass shall be simulated during welding procedure qualification. If the use of cellulosic electrode has been agreed, the following additional requirements shall apply:

1. Pre-heat shall be minimum 100^0C.
2. Delay between the completion of root pass and the start of depositing the hot pass shall be minimum 6 minutes.
3. Immediately upon completion of welding during welding procedure qualification, the test pieces shall be water quenched as soon as the temperature of the test piece is below 300^0C.
4. Non destructive testing of the test pieces shall be by Automated Ultrasonic Testing (AUT) or by Radiographic Testing and Manual Ultrasonic Testing.

Low Hydrogen Electrodes with uphill techniques shall be used for all repairs, when external lineup clamp is used, tie-in, special crossings and f**illet welds.**

PL4.4 Welding Procedure Qualification

Welding Procedure shall be qualified as per DNV-OS-F101(Submarine Pipeline Systems) except as modified by this specification. Previously qualified welding procedures are not acceptable. However, for welding of CS & CS NACE Line Pipes (Girth welds) of SMYS < 450 MPa, WPS for new production job may be based on a previously qualified WPQR (Welding Procedure Qualification Record) provided

a. The applicable WPQT (Welding Procedure Qualification Testing) was done in last 2 years for ONGC Job *dated with effect from date of starting fabrication. If it is not of ONGC project, it shall be fresh WPQT for project specific.*
b. WPQT was witnessed by a reputed TPI agency.
c. Meet all the requirements of this specification and DNV-OS-F101. d.
Match all the essential parameters as given in DNV-OS-F101.
e. Written approval shall be obtained from Company.

For new WPS, the contractor shall first submit the Preliminary WPS (pWPS) for Company's review and approval. The pWPS shall contain all the relevant information required for the applicable welding process, as given in Clause D700 of DNV-OS-F101. After getting the approval of pWPS, the contractor can go ahead with the WPS qualification as per the requirements given in

DNV-OS-F101. Qualification welding shall be performed using the type of welding equipment to be used for production welding and under conditions that are representative of the actual working environment for the work (for WPSs to be used on pipelay barges, qualification welding has to be carried out on floating vessels / barges).
WPS qualification shall be witnessed by Company Representative and a reputed TPI agency.

Repair welding procedure shall be qualified separately. Pre-heat for repair welding shall be minimum 50^0C above the minimum specified pre-heat for production welding. Re-repair welding procedure shall also be qualified separately.

In case of riser line, as it is considered part of pipeline, this WPQT & WPS is applicable till the flange joint of shutdown valve or launcher whichever is earlier. In case, this riser line is prefabricated in yard , the same WPQT & WPS is applicable. However internal/external line clamp may not be required as mentioned in clause PL4.6."

PL4.5. Welder and Welding Operator Qualification

Welders and Welding Operators shall be qualified as per the requirements of DNV-OS-F101 in the presence of Company Representative and a reputed TPI agncy. Welders shall be qualified under conditions that are representative of the actual working environment. (Pipeline welders shall be qualified on floating vessel / barge)

PL4.6. Production Welding

The type of welding Equipment and Welding Procedure shall be qualified prior to the start of installation welding.
Internal line-up clamp shall be used for pipeline of size 6" and above. Internal lineup clamp shall remain in place at least until the root pass is completed around the full circumference.

External lineup clamp shall not be removed until a minimum of 50% of root pass, uniformly spaced around the circumference, has been completed.

Arc strikes – arc shall be struck only on fusion faces and not on other areas of the pipe.

The pipelay barge shall not be moved before the first hot pass is completed.

PL4.7. Non Destructive Testing

The extent of NDT for installation girth welds shall be 100% Automated Ultrasonic Testing (AUT) or Radiographic Testing. Radiography shall be carried out using X-ray with panoramic exposure. Gama ray may be used in case of inaccessible joints with approval of ONGC (with submission of specific joint details & with AFC).
For wall thickness > 25 mm, AUT should be used. For >25mm, if RT is used, it shall be supplemented with Ultrasonic Testing.
While using GMAW (like mechainsed or semi-automatic welding) or FCAW welding process, AUT is the preferred NDT technique.

100% Ultrasonic Testing of first 10 welds shall be carried out while using GMAW or FCAW processes, when starting installation or when resuming production after suspension of welding and when radiographic testing is the primary NDT technique. If Ultrasonic Testing reveals defects not discovered by radiography, the extent of Ultrasonic Testing shall be 100% for the next 10 welds. If the results of this extended testing are unsatisfactory, the welding shall be suspended until the causes of the defects have been established and rectified.

UT lamination check shall be carried out on 50 mm wide band at the flame cut pipe ends.

For "Golden Welds" (critical welds e.g. tie-in welds that will not be subject to pressure testing, etc.) 100% ultrasonic testing, 100% radiographic testing, and 100% magnetic particle testing or 100% liquid penetrant testing of non- ferromagnetic materials shall be performed. If the ultrasonic testing is performed as automated ultrasonic testing, the radiographic and magnetic particle/liquid penetrant testing may be omitted subject to agreement.

Prior to commencement of WPS qualification, contractor shall prepare and submit NDT Procedures (RT, MPI, LPT, UT/AUT) for Company's review and approval.

NDT Procedures, Equipment qualification and Acceptance Criteria shall be as per the requirements given in Appendix D of DNV-OS-F101.

AUT Procedures, Equipment and qualification for AUT shall be as per the requirements given in Appendix E of DNV-OS-F101. Defect Acceptance Criteria shall be arrived at using ECA. AUT

shall be performed in accordance with DNV-OS-F101 Appendix E and ASTM E1961.

If the Contractor proposes to use AUT, the contractor shall arrange familiarization and interpretation training on AUT for Company inspectors as and when required without any additional cost to Company

If using AUT, Contractor shall carry out ECA to arrive at weld acceptability criteria which is subject to approval by Company. As a minimum, requirements of Appendix A of DNV-OS-F101 shall be met. Details of laboratory / agency performing ECA shall be submitted to Company for review and acceptance. The agency should have skilled personnel and previous experience to carry out ECA as per BS 7910 requirements.

The effectiveness of the AUT Procedure shall be demonstrated by a qualification programme in accordance with DNV-OS-F-101, Appendix E, Section H. The AUT system must demonstrate the ability to detect and accurately size length and vertical height of indications with a resolution compatible with the applicable acceptance criteria.

NDT Operators shall be qualified and certified in accordance with the requirements of Level II of the latest edition of SNT-TC-1A or equivalent PCN or CSWIP Level II.

Additionally, AUT operators shall have received a sufficient level of training of Automated Ultrasonic Testing, including practical and theoretical aspects applicable to the equipment and configuration to be examined. This training shall be documented and will be verified by the Company.

PL4.8. Repair Welding

Repair welding shall be performed in accordance with a qualified repair welding procedure. After grinding / gouging, Magnetic particle testing or liquid penetrant testing of non-ferromagnetic materials shall be performed to verify complete removal of defects before commencing weld repairs.
Pre-heat for repair welding shall be 50^0C more than that used for production welding.
Only two times repairs are allowed on any joint.
If the repair welding station is after the pipe tensioner, a weld repair analysis shall be carried out.
The analysis shall determine the maximum allowable excavation length and depth combinations taking in to account all stresses acting at the area of the repair. The weld repair analysis shall be subject to agreement.

PL4.9. Other Materials

For materials other than CS & CS NACE, contractor shall prepare various procedures like WPS, NDT etc. and shall submit for Company's review and approval.

ANNEXURE I

WELDING OF DUPLEX STAINLESS STEEL

			7	10/01/2005	1
PDD / PNN	SKS / MP	JSS			
PREPARED / REVISED BY	REVIEWED BY	APPROVED BY	TOTAL No. OF PAGES	DATE	REV. No.

WELDING SPECIFICATION FOR DUPLEX STAINLESS STEELS

1.0 WELDING PROCESS

Shielded Metal Arc Welding (SHAW), Gas Tungsten Arc Welding (GTAW), Submerged Arc Welding (SAW) and Plasma Arc Welding (PAW) processes are suitable for Duplex stainless steel. These Welding methods along with the related operational precautions such as cleanliness and protective gas shielding should be used for making duplex stainless steel welds. Shielding / purging gases shall be selected ensuring freedom from hydrogen.

2.0 MICROSTRUCTURE

The ferrite content of the weld metal estimated through metallographic examination, should be between 30% to 55% to obtain weld joints with the best ductility and corrosion resistance. The filler metal composition and the welding heat input should be so selected as to give the ferrite content of the weld metal between 30% to 55%.

3.0 FILLER METALS (Welding Consumables)

Table 1 enclosed herewith tentatively lists the different filler metals used for duplex stainless steels conforming to UNS S 31803. Welding consumables shall be used only after conducting consumable qualification tests. Consumables shall be degreased or baked and stored in accordance with the manufacturer's recommendations.

4.0 MECHANICAL PROPERTY REQUIREMENTS

The weld metal should have the following mechanical properties :

4.1 Tensile Strength - 680 – 880 N/mm^2

4.2 Yield Strength (0.2% Offset) - 450 N/mm^2 (Min.)

4.3 Elongation - 25% (Min.)

4.4 Impact Energy (Charpy V-notch Valves)

At + 20°C (68°F) - 100 Joules Average (72 ft. lb)
75 Joules Average (54 ft. lb)

At –30°C (-22°F) - 60 Joules Average (43.2 ft. lb)
40 Joules Average (28.8 ft. lb)

5.0 QUALIFICATION TESTS

5.1 Welding Procedure Qualification Tests

5.1.1 General

Each particular welding procedure shall be specially qualified for the job; no previous test reports shall be recognized as a qualification of the work to be performed. The welding filler metal to be used shall be of a grade, which will yield a weld metal equivalent to that of the base metal. Welding consumables shall be subjected to initial qualification testing and the consumable shall require company's approval. During Procedure Qualification, the heat input for 22% Cr Duplex steels shall be limited to 0.8 – 2.5 KJ/mm. In production welding, the heat input shall not deviate from that qualified by more than +/- 10%. P numbers shall not apply to duplex stainless steels. Each alloy designation shall be separately qualified in accordance with this specification.

5.1.2 Welding consumable qualification tests and welding procedure qualification tests shall be conducted before the start of procurement by employing an approved welding procedure in presence of the Company's Representative. The welding procedure shall be prepared by the Contractor based on the information provided by the Supplier of raw materials and/or electrodes Supplier and approved by the Company. Welding procedure shall be such that it gives maximum hardness on the outer surface of pipe.

All the mills supplying the raw material/pipes etc. shall be required to pass the tests required for procedure qualification testing. Approved procedure shall be common to all the mills.

Laboratory tests shall be performed at an official Laboratory approved by the Company. Sufficient advance notice shall allow the Company to witness all or part of the tests.

5.1.3 Test Samples

Tests mentioned below shall be performed on welded test pieces and shall include the parent metal, heat affected zone and the weld metal.

5.1.4 Procedure Qualification Tests shall be carried out as given below :

i) Chemical Composition and Microstructure Examination

The ferrite content measurement of test pieces shall be carried out by both the following methods:

a) Metallographic determination and

b) Magnegage method (According to Kotecki)

The procedure of ferrite measurement and the calibration of measuring instrument shall bear the approval of the Company before being employed.

ii) Mechanical Properties

These tests shall include tensile testing, impact strength and bend test. Bend tests shall be performed in accordance with ASTN A 370 with a plunger dia equal to 4 times the thickness. No defect shall be visible on bending.

iii) Hardness Tests

Each qualification test shall include a cross sectional hardness survey.

A complete survey of the weld, heat affected zone and the base metal shall be performed according to the following procedure :

- the test method shall be as per ASTM E 18.
- the distance between indentations shall be a maximum of 1 mm.
- The results shall not exceed RC 28.

iv) Corrosion Tests

a) Intergranular Corrosion Tests (HUEY)

The welds shall be subjected to ASTM A 162 practice C (HUEY Test). Weight loss shall not exceed 3 to 4 mils/month.

b) Chloride Stress Corrosion Cracking Test.

This type of test shall be conducted on the material at 155° C with aeration in 45% $MgCl_2$ solution as per ASTM G 36. Stress to

cause repute in 500 hours shall exceed 0.35 times the ultimate tensile strength. This test is required to be done per heat for each mill before start of procurement.

c) SSCC Test

Resistance of the material to SSCC shall be tested using :

a) NACE TM 01-77 test solution (Test temp. 24 Deg. C).Minimum stress for cracking in 720 Hrs shall be 350 N/mm2.

b) NACE TM 01-77 test solution (test temp. 90 Deg C and total pressure of H2S = 16 Bars).

Min. stress for cracking in 720 Hrs = 325 N/mm2.

v) Radiography

The welds shall be 100% radio graphed shall be as per ASME, Section – VIII, Division – I, UW – 51.

vi) Dye Penetrant / MP Testing

All fillet and groove welds other than these radio graphed shall be tested by dye penetrant testing or by magnetic particle testing method. No defect shall be accepted.

vii) Heat Treatment (if required)

Suitable heat treatment procedure shall be established for retaining the Duplex S.S. properties of welded joints which shall be approved by the Company before implementing.

5.2 Welder Qualification Tests

Welders shall be qualified at the fabrication yard / barge employing the qualified welding procedure. The test pieces of each welder shall be subjected to mechanical tests, radiographic examination, DPT/MP Test, microstructure examination and cross-sectional hardness survey with the same test procedure and acceptance criteria as mentioned in 5.1 above.

6.0 FABRICATION

6.1 No fabrication shall start until the Company has approved the chemistry of the materials, the results of welding procedure qualification tests and welders are qualified as per the approved procedure.

6.2 Working practices shall be designed to minimize contamination and before welding, internal and external surfaces shall be cleaned for a distance of at least 50mm from the fusion face.

6.2 In production welding the heat input shall be monitored and the same shall not deviate from the qualified WPS by more than +/- 10%.

6.2 Production/Fabrication Tests

Shop/Site Fabrication Tests for each weld shall include :

- Non – destructive hardness tests by portable hardness tester
- Radiography
- DPI/MP Examination
- Ferrite Measurement by either

  a) Magnegage method (extended range, according to Kotecki)

  OR

  b) Forster Probe Method.

Procedure	Supplier Commercial Name	Typical Chemical Composition in %	Comments
Plasma auto or Manual	Smitweld SW 4462 (Revised Composition)	C:0.010 Mn:1.6 Sl:0.25 P:0.20 S:0.008 Cr:23.0 Ni:8.8 Mo:3.1 N:0.012	Filler metal recommended when as welded
	Thyssem	C:0.016 Mn:1.57 Si:0.17 Cr:22.8 Ni:9.18 N:0.04	Very low nitrogen (traces) ferrite level practically identical to 22-6-31.
	Thermanit 22-09		Excellent results when welded with nitrogen in welding gas.
SAW	Thyssen Thermanit	C:0.016 Mn:1.57 Si:0.17 Cr:22.8 Ni:9.18 N:0.04	With flux SAP CN 100 – as welded condition gives ferrite range 35-65%
SMAW	Thermanit 22-09	C ≤ 0.030 Cr:22.0 to 23.0	
	Sandvik 22-9-3LR Smitweld Arosta 4462 Philips Rs 22-9-3LC Avesta 223 FAL-PW	Ni:9 to 10 Mo ≈ 3, N:0.10 to 0.15	These electrodes even with low heat input, give welds with specified ferrite range.

Piping Functional Specification

WHRU REPLACEMENT PROJECT

VOLUME – IIIA

OIL AND NATURAL GAS CORPORATION LIMITED
INDIA

INDEX

PIPING FUNCTIONAL SPECIFICATION

S/N	FS No.	Description
1	FS-2004A Rev.9	Piping Design
2	FS 2004B Rev.4	Piping fabrication and Installation
3	FS-2004D Rev.8	Piping Specialties
4	FS 2006 Rev.3	Insulation of piping and equipment
5	PMS 2008-Rev. 3	Piping Material Specification

FUNCTIONAL SPECIFICATION

FOR

PIPING DESIGN

Prepared / Revised By	Reviewed By	Approved By	Total No. of Pages	Date	Rev. No.
PS	AKM	SJ	75	09.05.16	9

REVISION STATUS RECORD

PS	SJ	AR	74	04.04.14	8
PS	GJ	GRP	78	21.07.09	7
PS	GJ	JSS	84	07.12.06	6
BLS	GJ	JSS	83	20.09.06	5
BLS	MP	JSS	83	04.02.06	4
PS	MP	JSS	83	21.06.05	3
Prepared By/Revised By	Reviewed By	Approved By	Total No. of Pages	Date	Rev. No.

CONTENTS

1. INTRODUCTION

1.1 General

1.2 Purpose of this document

1.3 Contractor's Responsibilities

2. ENVIRONMENTAL DESIGN CRITERIA AND UTILITIES

2.1 Basic Climatic Condition

2.2 Seismic and Transportation Loads

2.3 Design Life

2.4 Dimensions

3. DESIGN REQUIREMENTS

3.1 General

3.2 Design Load Cases

3.3 Design Stress

3.4 Drawings and Calculations

4. MECHANICAL REQUIREMENTS

4.1 Minimum Thickness

4.2 Corrosion Allowances

5. MATERIALS

5.1 General Specification

5.2 Sour Service Requirement

5.3 Corrosion Allowance

5.4 Carbon Steel

5.5 Stain less Steel

5.6 Duplex Stain less Steel

5.7 Incoloy /Inconel Claded piping

5.8 Cu-Ni (90-10)

5.9 Copper

5.10 GRE

5.11 PVC

5.12 CPVC
5.13 TITANIUM
5.14 Material Identification
5.15 Supports and Miscellaneous
5.16 Bolting
5.17 Gaskets
5.18 Certification Documents

6. TECHNICAL NOTES FOR PIPING COMPONENTS
6.1 Pipe
6.2 Tubing
6.3 Fittings
6.4 Branch Connections
6.5 Flanges
6.6 Bolting
6.7 Valves
6.8 Specialty Items

7. PIPING SYSTEM DESIGN
7.1 General
7.2 Pipe Routing
7.3 Pipe Supports
7.4 Pipe-ways
7.5 Piping Clearances
7.6 Flanged Connections
7.7 Threaded Pipe work
7.8 Changes in Materials
7.9 Vents, Drains & Bleeds
7.10 Corrosion Inhibition & Monitoring Pipe work
7.11 Relief Valves
7.12 Control Valves
7.13 Isolations
7.14 Fire Suppression System
7.15 Cupro-Nickel Pipe work
7.16 Copper Piping

7.17 GRE Piping Systems
7.18 Piping on the Bridge
7.19 Piping at Equipment
7.20 Piping layout requirements
8. PROTECTIVE COATINGS & INSULATION
9. PIPING SPECIFICATION INDEX
10. GENERAL REQUIREMENTS
10.1 Pre qualification criteria and tests for manufacturers (New Vendor)
10.2 Suggested Third Party Inspection Agencies
10.3 Quality Assurance
10.4 Safety Provisions
10.5 Receipt & Storage
10.6 Spares
10.7 Warranties
10.8 Documentation

GLASS REINFORCED EPOXY (Annexure-1)
1.1 Scope
1.2 Design / Operating Data
1.3 Design & Manufacture of GRE piping
1.4 Qualification & Quality Control of GRE Piping
1.5 Fabrication & Installation of GRE Piping
1.6 Certification Requirements of GRE Piping.
1.7 List of Codes & Standards for (GRE) Composite Material Piping

1. INTRODUCTION

1.1 GENERAL

This refers to the minimum and mandatory requirements of designs & materials for piping & piping components. All piping assemblies, equipment & materials supplied or installed under these specifications shall be in accordance with sound engineering principles. Any omission from this specification shall not relieve the contractor from his responsibility of furnishing equipment or materials to meet the specific process parameters, environmental parameters, safety parameters and any other applicable statutory laws or relevant codes & standards. Substitution or changes from this specification must be accompanied with sufficient information/justification and written approval shall be obtained from the Company.

All piping, piping components, piping specialties and vessels shall be painted in accordance with Spec. No. 2005.

All piping, piping components, piping specialties and vessels shall be insulated in accordance with Spec. No. 2006.

All welding and NDT shall be performed as per Spec. 2009 F.

1.2 PURPOSE OF THIS DOCUMENT

This document shall form the basis upon which the Engineering Procurement and Construction Contractor can develop a detailed specification. This document should be considered as a general specification. The Contractor should update this document with the detailed design information that is developed during the detailed design phase.

1.3 CONTRACTOR'S RESPONSIBILITIES

The Contractor shall be responsible for the selection and design of piping, including full compliance with all applicable project specifications and design Codes / Standards, including those listed in Piping Design Criteria.

The Contractor shall provide and follow detailed pipe work specifications, covering materials, classes, fittings, valves, branches and special items. These specifications shall generally comply with this Specification.

This Specification covers all pipe work on the offshore production facilities at New platforms and for modification jobs as per the bid package and approved P&ID except the following: -

a. All instrument piping downstream of the last piping block valve, as defined on the P & ID's.

The Contractor shall provide the Company with all drawings, specifications and detailed pipe stress calculations for approval.

2. ENVIRONMENTAL DESIGN CRITERIA AND UTILITIES

2.1 BASIC CLIMATIC CONDITIONS

Refer structural design criteria, Vol-II, Section-3.4 attached in bid package.

2.2 SEISMIC AND TRANSPORTATION LOADS

All equipment supports and braces, pipe supports and other support steel work, including temporary braces, shall be designed to withstand seismic loads applicable to the present location. Refer to the Structural Basis of Design for seismic design considerations.

All equipment supports and braces, pipe supports and other support steel work, including temporary braces, shall be designed to withstand the operating, lifting, transport (by road and by sea) and hydro-test loads specified in Project Specification.

2.3 DESIGN LIFE

The process facilities design life requirement is 25 years.

2.4 DIMENSIONS

S1 units shall be used. Dimensions shall be in mm and be related to the Platform datum's or reference lines.

3. DESIGN REQUIREMENTS

3.1 GENERAL

Design requirement shall be as per Cl. 4 of piping design criteria, Vol-II section 3.3.

3.2 DESIGN LOAD CASES

Pipe work, its supports and anchors, shall be designed to withstand the results of the following applicable combinations of loads and forces within the limits of stress set by ASME B31.3:

a) Hydro-test Condition (The empty weight plus weight of water to fill the piping).

b) Operating and Design Conditions (The empty weight plus the weight of operating fluid).

c) Wind loading condition

d) Dynamic Loading Condition

e) Periodic Site Test Condition

f) Any other condition that would affect the safety of the pipe work, e.g. cyclic loading and slug forces, when identified on the Data Sheet.

The pipe work shall be analyzed in its corroded state for each load combination.

3.3 DESIGN STRESS

Allowable stress shall be the maximum stresses permitted by ASME B31.3.

3.4 DRAWINGS AND CALCULATIONS

The Isometric drawings submitted by contractor shall contain information not limited to the following:

a) Material of construction.
b) Design pressure and design temperature.
c) Pressure rating of piping/piping components.
d) Hydro-test pressure.
e) Stress relieving requirements.
f) Stress analysis requirements.
g) Insulation requirements.
h) Supports details.
i) Line number.
j) NDT requirements.

Note:

In addition to above isometric drawing shall contain all pertinent information relating to the Standards, Codes and Specifications used in the design, fabrication, and inspection and testing of the pipe work, including the materials used.

The Contractor shall submit detailed calculations establishing the compliance of their design with applicable codes and standards specified in Piping Design Criteria.

All calculations shall be complete, giving all references and showing all working methods. The Contractor shall be able to provide proof of software verification for any software used. Computer printouts will not be accepted without input data and complete printout.

Wherever relevant, additional calculations shall be undertaken regarding the effects of slug forces.

Contractor to prepare the piping material specification for each class & shall provide the complete information such as pipe size, thickness, fittings, flanges branch connection tables, valve selection & tag numbers, designed pressure- temperature ratings and applicable codes/standards etc. Contractor shall submit the piping class data sheets for company's approval.

Contractor to prepare the data sheets & specifications for piping specialties based on good engineering practice & applicable codes/standards and obtain company's approval.

Approval of drawings, calculations and other documents by the Company does not relieve the Contractor of their responsibility for the correctness of the design to suit the stated conditions.

4. MECHANICAL REQUIREMENTS

4.1 MINIMUM THICKNESS

The minimum thickness of material other than carbon steel shall be based on requirements of pressure & other mechanical loading. However, the minimum thickness of high alloy steel vessels (austenitic) & their components shall not be less than 3 mm.

Contractor to provide thickness calculations for each size & piping class. Minimum wall thickness of carbon steel & low alloy pipes, including corrosion allowance, shall be as following:

- DN 40 ($1^1/_2$") or less – schedule 80
- DN 50 (2") through DN 150 (6")- schedule 80
- DN 200 (8") through DN 600 (24")- standard wall.

4.2 CORROSION ALLOWANCES

Unless otherwise specified on the Pipe Specification Index & other project specifications, carbon steel pipes shall have 3 mm corrosion allowance & carbon steel (NACE) shall have 6

mm corrosion allowance applied to all pressure retaining parts and all surfaces of non-removable internals exposed to the process fluid.

When corrosion protection is provided by a corrosion resistant metallic lining, a minimum thickness of 3 mm of lining material shall be used.

Pipe work that is subjected to erosion e.g. due to impingement by the process stream, shall be protected with extra wall thickness.

5. MATERIALS

5.1 GENERAL SPECIFICATION

Materials shall be as per ASTM, BS or API specifications referenced in Piping Design Criteria.

Materials shall be new and unused, clean and free from rust, pits and obvious defects. Material older than one year from date of manufacturing shall not be permitted.

Cast, ductile or malleable iron, aluminum, copper, or copper-bearing alloys shall not be used in hydrocarbon service.

For carbon/carbon manganese steel vessels operating below 0ºC and requiring impact testing, all pressure parts and direct attachment materials shall be manufactured with fully killed, fine grain materials.

All pipe fittings specified as galvanized shall be hot dip galvanized with a minimum of 763 grams of galvanizing material per square meter of surface area, in accordance with ASTM A123M/ASTM A153.

5.2 SOUR SERVICE REQIREMENTS

5.2.1 CARBON STEEL (NACE)

This shall be in accordance with NACE Standard MR-01-75/ISO 15156-1/2/3 and shall meet the following special requirements: -

SPECIAL REQUIREMENTS FOR MANUFACTURE, INSPECTION, TESTING AND SUPPLY OF CARBON STEEL (NACE) MATERIAL:

5.2.1.1 MANUFACTURE

The following treatments during steel making are mandatory:

a) All steel shall be fully killed and fine grained.

b) All steel shall be produced using Basic oxygen or Electro Furnace Process.

c) Steel shall be made by low sulphur and low phosphorous refining process and shall be vacuum degassed while molten by means of an approved procedure.

d) Effective sulfide shape control by calcium treatment shall be carried out if sulphur level is in excess of 0.002% for CS-NACE plate material and piping finished product fabricated from plate material.

e) Specific treatment to control non-metallic inclusions likes Aluminum oxide clusters, silicates and magnesium sulphide etc.

The manufacturer shall take particular care to control the rolling and heat treatment conditions so as to eliminate low temperature transformation microstructures associated with segregation such as bainite band or islets of martensite in order to reduce the propagation of HIC.

5.2.1.2 INSPECTION AND TESTING

The following tests shall be conducted in addition to relevant codes and standards. Test certificates shall be duly witnessed & certified by a Company approved third party inspection agency.

A. HYDROGEN INDUCED CRACKING (HIC) TESTING

This test shall be conducted only for pre-qualification of vendors who are not listed in suggested vendor list. This test shall be carried out on one finished product of each heat (material wise and type of construction wise, i.e. seamless and welded separately) irrespective of size/thickness. The test shall be carried out as per NACE-TM-02-84 standards.

HIC testing for casting is not required.

The test shall be performed on a set of three test specimens. The test shall be performed, as per NACE-TM-02-84 and the acceptance criteria shall be as Crack sensitivity ratio (CSR) < 1% & Crack Length Ratio (CLR) < 10.00%

In case any one of the above samples fails to meet the acceptance criteria, three more additional specimen from the product from which the first set of specimen were taken, shall be retested and results reported.

In case of failure of any of the samples in above, two additional products shall be selected from the same heat and size specimens shall be tested (three from each product).

In case of failure of any one of the six-samples, the particular heat will be rejected.

B. SULPHIDE STRESS CORROSION CRACKING (SSCC) TEST

This test shall be conducted only for pre-qualification of vendors who are not listed in suggested vendor list. This test shall be carried out on one finished product of each heat (material wise and type of construction wise i.e. seamless and welded separately) irrespective of size/thickness. The test shall be carried out as per NACE-TM-01-77.

Reporting of test result: Curve shall be reported as per NACE-TM-01-77 for various stress level between 72%and 90% of SMYS.

Acceptance Criteria: At72%SMYS, time of failure shall not be less than 720 hrs.
Sampling for test shall be same as indicated clause no. 5.2.1.2 A

C. HARDNESS TEST

This shall be carried out on finished product of each heat irrespective of size/thickness.

This test shall be carried out as per ASTM E-18/ ASTM E-92/ASTM E 10.

The product/heat for which hardness values are found in excess of specified value shall be rejected. Maximum hardness value shall be limited to HRC-22.

D. MICROSCOPIC TEST

This shall be carried out on finished product of each heat (material wise and type of construction wise i.e. seamless and welded separately) irrespective of size/thickness.

This test shall be carried out as per ASTM E-45 Method D. Steel shall be calcium treated for inclusion morphology control & there shall not be elongated manganese sulphide inclusions.

E. CHEMICAL ANALYSIS

This shall be carried out on finished product & raw material for each heat (material wise and type of construction wise i.e. seamless and welded separately) irrespective of size/thickness. Test results shall meet the relevant codes & standards.

The acceptable level of Sulphur is as follows:

i) 0.003 % Max for Flat rolled Products
ii) 0.01 % Max for Seamless products.
iii) 0.025 % Max for Forging.

If the Sulphur level is higher than these limits, HIC test as per clause no. **5.2.1.2 A** shall be carried out.

Carbon equivalent (CE) shall be less than 0.40 & PCM shall be less than 0.21 and shall be computed as per one of the following formulae depending upon.

a) If C $\geq$ 0.12%, CE= C + Mn/6 + (Cr+Mo+V)/5 + (Ni+Cu)/15
b) If C< 0.12%, PCM= C+ Si/30 + (Mn+Cu+Cr)/20 + Ni/60 + Mo/15 + V/10 +5B

F. MECHANICAL TEST

The mechanical properties shall be as per the specified material specification.

F. THROUGH THICKNESS TENSION TEST (FOR PLATES)

Plates 25mm and above in thickness shall be tested perpendicular to the rolled, surface with frequency and test procedure as per ASTM A 770 and determination of reduction of area as per ASTM A370. Minimum reduction area shall not be less than 35%.

G. ULTRASONIC TESTING (FOR PLATES)

Test shall be performed for thickness 12.7mm and above according to ASTM A578 level – B. No repaired welding shall be permitted on plates.

5.2.2 STAINLESS STEEL (NACE)

This shall be in accordance with NACE Standard MR-01-75/ ISO 15156-1/2/3 and test requirement as per applicable material standard.

A. INTER GRANULAR CORROSION CRACKING (IGC)

For all austenitic stainless steel Piping, Piping components and Valves, Inter-granular Corrosion Test (IGC) shall be conducted as per following ASTM A 262 practice "B" with acceptance criteria of 60 mills per year (max) for all materials- forged, rolled, wrought and casting.

5.2.3 DUPLEX STAINLESS STEEL

This shall be in accordance with NACE Standard MR-01-75/ ISO 15156-1/2/3 and test requirement as per applicable material standard.

The following tests shall be conducted in addition to relevant codes and standards. Test certificates shall be duly witnessed & certified by a Company approved third party inspection agency.

A. CHLORIDE STRESS CORROSION CRACKING TEST

This test shall be conducted only for pre-qualification of vendors who are not listed in suggested vendor list.

Either of the two tests given below can be carried out to assess the chloride Stress Cracking Resistance of the Material.

Test: 1

This test shall be conducted on the material at 155 Deg C with aeration in 45% $MgCl_2$ solution as per ASTM G36. Stress to cause rupture in 500 hours shall exceed 0.35 times the ultimate tensile strength. This test shall be carried out on one finished product of each heat irrespective of size & thickness.

Test: 2

This test shall be conducted on specimen as per ASTM G 36 at 100 degree Celsius with aeration in boiling 40% $CaCl_2$ solution & pH shall be at 6.5. Stress to cause rupture in 500 hours shall exceed 0.85 times the ultimate tensile strength. This test shall be carried out on one finished product of each heat irrespective of size & thickness.

B. PITTING CORROSION TEST

This test shall be conducted on specimen as per **ASTM G48** using ferric chloride solution (10% $FeCl_3.6\ H_2O$) as per method A at 22 ± 2^0 C for 72 hours and at 50^0 C for 24 hours. The acceptance criteria shall be no pitting shall occur on surface of tested material for the test at 22 ± 2^0 C and for the test at 50^0 C weight loss shall be reported to company for review. In addition to that, another test shall also be carried out to establish the critical pitting temperature as per method E of ASTM G 48 and report the critical pitting temperature to company for review. Preferably minimum critical pitting temperature shall be 30^0 C.

C. INTERGRANULAR CORROSION TEST (HUEY TEST)

The test shall be carried out, as per ASTM **A 262 Practice C.** weight loss shall not exceed 4 mils/month. This test shall be carried out on one finished product of each heat irrespective of size & thickness. The entire test reports shall be from the product specimen drawn from the heat bearing same number.

D. CHEMICAL TEST

This test shall be carried out on finished product of each heat irrespective of size & thickness as per relevant codes & standards with following limitation.

Pitting index (P.I) shall be computed as per following formulae.
P.I. = %Cr + 3.3(% Mo) + 16(% N_2)
The Pitting index of the material shall be greater than 35.
Carbon content shall be 0.03% (max.)
Sulpher content shall be 0.02%(max.)

E. MICRO STRUCTURAL EXAMINATION AND FERRITE MEASUREMENT

Ferrite content measurement of the material shall be carried out as per ASTM E 562 for each heat by metallographic examination. Ferrite content shall be in the range of 45% to 55%.

F. HARDNESS TEST

This test shall be carried out on finished product per heat, manufacturing method wise as per ASTM E 18 irrespective of size & thickness. Maximum hardness of the product shall be limited to HRC 25 (max.).

G. SULPHIDE STRESS CORROSION CRACKING (SSCC) TEST

This test shall be conducted only for pre-qualification of vendors who are not listed in suggested vendor list.

Resistance of the materials to sulphide stress corrosion cracking shall be tested using:

a) NACE –TM- 01-77 test solution (test temp.24° C) minimum stress for cracking in 720 hrs. is 350 N/mm^2.

b) NACE-TM-01-77 test solution (test temp. 90° C and total pressure of H_2S =16 bars) minimum stress for cracking in 720 hrs. is 325 N/mm^2.

H. MECHANICAL TEST

The following mechanical test shall be carried out: -

(I) Tensile Test

The material in solution-annealed condition shall conform to the mechanical properties requirements specified below-

a) Ultimate Tensile Strength : 680-900 N/mm^2

b) Yield Strength (0.2% offset) : 450 N/mm^2 (min)

c) Yield Strength (1.0% offset) : 500 N/mm^2 (min)

d) Elongation : 25% minimum

e) Hardness : HRC-25 (max.)

(II) Impact Test

Fracture Toughness (Charpy V-Notch Energy)

- For Wrought Materials

At +20 ^oC	(68 ^oF)	120 Joule (Avg)
		90 Joule (Min)
At -30 ^oC	(-22 ^oF)	100 Joule (Avg)
		75 Joule (Min)

- For Cast Materials

At +20 ^oC	(68 ^oF)	75 Joule (Avg)
		55 Joule (Min)
At -30 ^oC	(-22 ^oF)	60 Joule (Avg)
		40 Joule (Min)

I. CREVICE CORROSION

This test shall be conducted on specimen as per **ASTM G48** using ferritic chloride solution (10% FeCl 3.6 H2O) at 25 degree Celsius for 24 hours. The acceptance criteria shall be no crevice corrosion shall occur on surface of tested material at specific temperature. This test shall be carried out on finished product of each heat irrespective of size & thickness.

5.2.4 Incoloy 825/Inconel 625 AND Incoloy 825/ Inconel 625 CLAD CARBON STEEL PIPE MATERIALS

This shall be in accordance with NACE Standard MR-01-75 and test requirement as per applicable material standard.

A TECHNICAL REQUIREMENTS FOR CLAD PLATES

1. Clad plates shall be made by using standard practice suitable to obtain metallurgical bonding between carbon steel and corrosion resistant alloy. A detailed procedure for production of clad plates shall be submitted for company's approval and shall include the following as a minimum:

a) Material traceability system

b) Steel and plate making process
c) Heating technique, rolling reductions, and working temperatures.
d) Cladding process
e) Procedure for heat treatment
f) Ultrasonic testing of plates and bond integrity check.

2. Each finished plate shall be subjected to automatic ultrasonic examination for checking bonding integrity and soundness of carbon steel backing plate. This test shall be carried out on 100% plate surface area on both sides, in accordance with ASTM A 578 and its supplementary requirement S3. The acceptance criteria for the finished clad plates shall be as per ASTM A 578 level B besides specific technical requirements mentioned below.

3. Discontinuity, causing complete loss of back reflection, which cannot encompass within 75-mm diameter circles, shall be unacceptable.

4. Clad plates having a total area of discontinuity greater than 6,000 sq. mm. shall be rejected. Also where the lamination exceeds 6.35 mm. in length measured along the two longitudinal edges of the plate, shall be rejected. A Laminar defect in the backing plate is also unacceptable. Unbounded area, which cannot be encompassed within 25-mm. diameters circles, shall be unacceptable.

5. Acceptance criteria for integrity of bond of the cladding material shall be as per ASTM A578, level S7.

6. No defect in corrosion resistant alloy is permitted. Minor defects, if any as mentioned in (a) and (b) below may be repaired with company's prior approval by welding and shall be subsequently tested by dye-penetrant examination. This manufacturer shall submit welding procedure for company's approval prior to undertaking such repair works.

a) Finished clad plates having defects lower than 500-cm2 area and total defect area lower than 1.5% of the total plate surface area is only allowed to be repaired.

b) The plates having defects lower than 500 cm^2 area and total defects greater than 1.5% but lower than 3% of the total surface are may be repaired with company's prior approval.

c) Plates having defective area greater than 3% or single defect greater than 500 cm^2 shall be rejected.

B. TECHNICAL REQUIREMENTS FOR CLAD PIPES

1. A detailed procedure for manufacture of pipes from clad plates shall be submitted for company's approval and shall include the following as a minimum.

    a. Pipe making procedure
    b. Welding procedure specification including chemical composition of filler wire and flux
    c. Flux handling, Heat treatment
    d. Visual and dimensional checks
    e. Inspection and testing, chemical, mechanical, corrosion, microstructure etc.
    f. Non destructive testing etc.
    g. Hydrostatic testing
    h. Finishing treatment
    i. Marking

2. The tolerances on dimensions and weights of the finished clad pipes shall be as per API Spec. 5L with the following modifications:

Permissible tolerances on nominal wall thickness shall be as follows:

a) On Carbon Steel backing material + 10%, -5%
b) On Clading (Incoloy-825/Inconel-625) material + 10%, negative tolerance NIL
c) Cumulative tolerance: The cumulative tolerance resulting from all the individual variation shall be such that the maximum radial mismatches between the inside diameter of any two-pipe cross-sections is limited to 0.5mm.

3. Pipe ends shall be beveled to suit API-5L.

C. HEAT TREATMENT

After finish rolling for bonding, all clad plate produced shall be normalized at a temperature of 950 + 50 deg.C followed by air cooling and water quenching. This will be followed by tempering treatment at 620/650 deg.C followed by air cooling.

The detailed heat treatment procedure (including any alternatives proposed) shall be submitted for Company's approval.

D. PHYSICAL PROPERTIES AND TESTS

Test tabs of adequate length shall be attached to an adequate number of pipes so as to facilitate carrying out the specified mechanical and corrosion tests.

The clad pipe shall be subjected to the following tests to determine the physical properties of the finished product. The test shall be carried out on the full thickness of carbon steel, after removal of corrosion resistant alloy Incoloy-825 Inconel 625, on the finished pipe. While removing corrosion resistant alloy, care must be taken not to reduce the wall thickness of carbon steel backing metal as far as possible.

1. **MECHANICAL PROPERTIES**

The carbon steel backing metal shall meet the requirements of mechanical properties set forth in API spec. for Line pipe and shall in addition have fracture toughness of minimum 47 Joules (average)/38 Joules (individual), when subjected to Charpy V-notch test at 0 deg.C, in accordance with ASTM A370. Testing frequency shall be as required for guided bend test mentioned below. Orientation, location, and number of specimens per pipe shall be as per supplementary requirements SR 5 of API Spec.5L.

2. **WELD TENSILE TEST**

The specimen shall represent full wall thickness of carbon steel with corrosion resistant alloy removed from specimen. The ultimate tensile strength shall be higher than the minimum specified for the base material. Testing frequency shall be as required for guided bend test mentioned below.

3. **GUIDED BEND TESTS**

The guided bend test shall be carried out on specimens taken from the each of the two representative pipes of each lot. The lot shall be defined as a maximum of 50 pipes belonging to the same heat of carbon steel and manufactured with the same process.

4. **MICROSCOPIC EXAMINATION AND HARDNESS TEST**

Test specimen for microscopic examination shall be taken transverse to the longitudinal weld, from the finished pipe. The width of the specimen shall be minimum of three times the width of the weld. The specimen shall then be ground suitably and etched to reveal the microstructure. The specimen shall be visually examined using a magnification profile with smooth transition to base material. The microstructure shall also be examined at a suitable, higher magnification to ensure favorable distribution of micro-constituents. Chemical composition shall be ascertained by appropriate methods to verify that in the top 2mm of the cladding it is within the specified limits. Hardness test HV 10 according to ASTM A370 and at suitable locations as per MR 01 75/ISO 15156-2, Fig.2 (Along with hardness at Parent

material, weld metal and HAZ of Cladded layer) shall be carried out on the test pieces already submitted to micro structural examination. In the heat affected zone indentations shall start as close to the fusion line as possible. The maximum Vickers hardness value for each single point shall not exceed 248 HV 10 on carbon steel portion and 285 HV 10 corrosion resistant alloys.

E. BOND EFFICIENCY TEST

1. SHEAR TEST

Shear test shall be performed according to ASTM A265 and minimum shear strength in the longitudinal direction shall be 140 Mpa.

2. DUCTILITY TESTS

Ductility test in longitudinal direction shall be performed according to ASTM A 265. No crack and no unbounding shall be allowed.

3. CHARPY IMPACT TEST

This test shall be performed in accordance with ASTM A 370. From each finished pipe per lot representing same heat of carbon steel and manufactured with the same process, five samples shall be taken transverse to the principal rolling direction. From each sample three specimens shall be machined. The specimens shall be notched as follows: -

- Weld Metal
- Fusion line + 2MM
- Base metal

At the test temperature of 0^0.C, the fracture toughness values obtained shall be consistent with those indicated in clause C-1 above.

F. CORROSION TESTS

The specimen shall be machined only to remove the carbon steel portion and shall contain the full weld on the corrosion resistant alloy in as welded condition. Corrosion resistant alloy shall not be ground or picked and surface of specimen shall approximate the same roughness as the finished pipe. Specimen shall be machined transverse to the weld with following dimensions:-

Width (transverse to the weld)	:	50 mm
Length (parallel to the weld)	:	25 mm
Thickness	:	1.5 mm (Min.)

The following corrosion tests shall be carried out on the specimens prepared as above.

1. INTERGRANULAR CORROSION TEST

(a) For Incoloy 825, this test shall be carried out in accordance with ASTM A-262 practice C. Maximum permitted weight loss shall not exceed 0.0040 inch/month.

(b) For Inconel 625, this test shall be carried out in accordance with ASTM G28 Method A. Maximum permitted weight loss shall not exceed 0.0040 inch/month

2. PITTING CORROSION TEST

This test shall be conducted on specimen as per ASTM G48 using ferric chloride solution (10% FeCl3.6 H2O) as per method A at 22 ± 20^0 C for 72 hours and at 50^0 C for 24 hours. The acceptance criteria shall be no pitting shall occur on internal pipe surface of tested material for the test at 22 ± 2^0 C and for the test at 50^0 C weight loss shall be reported to company for review. In addition to that, another test shall also be carried out to establish the critical pitting temperature as per method C of ASTM G 48 and report the critical pitting temperature to company for review. Preferably minimum critical pitting temperature shall be 30^0 C for Incoloy 825 and 85^0 C for Inconel 625.

3. SULPHIDE STRESS CORROSION CRACKING (SSCC) TEST

This test shall be conducted only for pre-qualification of new vendors who are not listed in suggested vendor list.

Sulphide Stress Corrosion cracking test shall be carried out on the cladding alloy as follows:

a) Test as per NACE-TM-01-77 at test temperature.

i) Room/24^0C

b) Test as per NACE-TM-01-77 except that the test solution shall have H_2S partial pressure of 5bars and CO_2 partial pressure of 20bars and test temperature shall be:

i. At 90^0C

ii) At 120^0C

Note:- Test solution – 5% NaCl + 0.5% Acetic Acid

Each test result shall be evaluated based on acceptance criteria of Minimum Stress for no cracking to occur after 720 hrs equals to 95% of SMYS of cladding material used

G. HYDROSTATIC TEST

All the finished pipes shall be subject to mill hydrostatic test pressures corresponding to 90% of the specified minimum yield strength for Carbon Steel and the test pressure shall be held for at least 30 seconds. Permanent test records (Pressure time chart) shall be maintained by the manufacturer and submitted for review of Company.

H. NON-DESTRUCTIVE INSPECTION

The following non-destructive inspection shall be performed on each pipe after hydrostatic testing. A detailed non-destructive testing specification shall be developed and submitted to Company for qualification and approval.

1. RADIOGRAPHIC EXAMINATION

After hydrostatic test, the weld seams shall be checked for detection of longitudinal and transverse defects to the weld by radiographic method on the full length of the pipe. Acceptance criteria for the radiographs shall be as per ASME BPV-VIII, Division I, clause UW 51.

The film used for radiographic inspection of pipe welds shall be class 1 and 2 referring to Table –II of ASTM E-94, with film density of 1.8-3.8 that allow the sensitivity of at least 1.5% of the nominal total thickness of pipe weld bead.

2. SOUNDNESS OF BONDING

After hydrostatic test, each pipe shall be inspected by ultrasonic method for the detection of lamination and for bonding check on a circumferential band of 50mm along each side of the longitudinal weld.

No lamination and unbonding are allowed on pipes. Pipe ends of each pipe shall also be inspected by Ultrasonic examination with angle probe to detect hair line crack defects on pipe body, perpendicular to the surface, for a length at least 50 MM. No defect shall be allowed.

3. MAGNETIC PARTICLE EXAMINATION

After hydrostatic testing, all pipes shall be subject to Magnetic particle examination. This shall include full length of external surface of the weld bead of backing material to be examined by Magnetic particle method. The test procedure shall be in accordance with

ASTM E 709 and acceptance criteria shall be according to ASME Sec. VIII, Div.2 Part 7 Clause no. 7.5.6.2.

5.3 CORROSION ALLOWANCE

The corrosion allowance for various service of piping systems are shown below. MOC shall be as indicated in the P & ID.

(Wherever more than one material is indicated against the same service, the MOC shall be as per the class and grade indicated in the P&ID.)

SERVICE	Min CA (mm)	PIPES	FITTINGS	FLANGES
Hydrocarbon (Sour service) for a) Gas Lift b) Well Fluid	6.0	CS (NACE)	CS (NACE)	CS (NACE)
	1.5	SS316L (NACE)	SS316L (NACE)	SS316L (NACE)
	0.0	DSS	DSS	DSS
	0.0	CS with INCOLOY	CS with INCOLOY	CS with INCOLOY
INJECTION WATER	3.0	CS	CS	CS
PRODUCE WATER	0.0	GRE (Glass reinforce d Epoxy)	GRE	GRE
INSTRUMENT GAS	1.5	SS316L (NACE)	SS316L (NACE)	SS316L (NACE)
	6.0	CS (NACE)	CS (NACE)	CS (NACE)
CLOSED DRAIN	6.0	CS (NACE)	CS (NACE)	CS (NACE)
OPEN DRAIN	3.0	CS	CS	CS
	0.0	GRE	GRE	CS
SEA WATER a)Raw Sea Water • Utility Water	0.0	90-10Cu-Ni	90-10 Cu-Ni	90-10Cu-Ni

• Cooling Water • Fire water	0.0	GRE	GRE	Al-Bronze
b)TreatedSeaWater • Fire water	0.0	GRE	GRE	CS
	3.0	CS	CS	CS
INSTRUMENT AIR	1.5	CS(G)	CS(G)	CS(G)
CHEMICAL	0.0	SS316L	SS316L	SS316L
FERRITIC CHLORIDE CHEMICALS	0.5	TITANIUM	TITANIUM	TITANIUM
Potable Water (Drinking)	0.0	Cu	Cu	BRONZE
	0.0	GRE	GRE	BRONZE
Sodium Hypo chlorite	0.0	CPVC	CPVC	CPVC
SEWAGE	0.0	GRE	GRE	GRE
ACIDISATION	3.0	CS	CS	CS

ABBREVATIONS:

AL-NI -	ALUMINIUM NICKEL
CA -	CORROSION ALLOWANCE
CPVC -	CHLORINATED POLYVINYL CHLORIDE
CS -	CARBON STEEL
CS(G) -	CARBON STEEL (GALVANISED)
DSS -	DUPLEX STAINLESS STEEL
GRE -	GLASS REINFORCED EPOXY
MM -	MILIMETER
NACE -	NATIONAL ASSOCIATION OF CORROSION ENGINEERS
PVC -	POLYVINYL CHLORIDE
SS -	STAINLESS STEEL

5.4 CARBON STEEL

5.4.1 CARBON STEEL (NON-NACE)

Carbon Steel materials used and specified as per American specifications. Bolting shall be ASTM A193 Grade B7/194 Grade 2H and it shall be Hot dip galvanized as per ASTM 153.

PIPES:

ASTM A 106 Gr. B (seamless), API 5L Gr. B (seamless / SAW),
API 5 L Gr. X 52 (Seamless/SAW), API 5L Gr. X 60 (Seamless / SAW), ASTM 333 Gr.6 (Seamless)

FITTINGS:

ASTM A 234 Gr. WPB,
MSS SP Gr. WPHY 52
ASTM A 350 Gr. LF2
ASTM-A105,
MSS SP Gr. WPHY 60
ASTM A 420 Gr. WPL6

FLANGES:

ASTM A105,
API 6A Type 2,
ASTM A 350 Gr. LF2
ASTM A694 Gr. F52,
API6A Type 4

VALVES:

BODY- ASTM 216 GR WCB, ASTM A 105, ASTM A 350 Gr. LF2, ASTM A 352 Gr. LCC
TRIM- 11-13% CROME (MIN.)/ ASTM 182 GRADE F316

PLATE : ASTM A-516 Grade 70

5.4.2 CARBON STEEL (NACE)

Material shall be same as clause no. 5.4.1. Sour service requirement shall be in compliance with clause no. 5.2.1 of this document.

STUD BOLTS: ASTM A-193 Grade B7M, For Low temperature use ASTM A 320 Gr. L7,(22 HRC max. hardness)

NUTS: ASTM A-194 Grade 2HM, For low temperature use ASTM 194 Gr.4 (22 HRC max. hardness)

Stress relieving of rolled plates, formed heads and pipe fittings shall be in accordance with NACE Standard MR0175.

5.5 STAINLESS STEEL

5.5.1 STAINLESS STEEL (Non-NACE)

Stainless steel materials are suitable for inner/wet parts of valves, instrumentation & vessels. Only following American specifications as specified against each product are permitted. MOC of stud bolt and nut shall be same as that of CS NON-NACE (cl. 5.4.1). Necessary considerations shall be followed to avoid galvanic corrosion.

PIPES : ASTM A 312 Gr. TP 316
ASTM A 358 TP 316

FITTING : ASTM A 403 Gr. WP 316
ASTM A 182 Gr. F316

FLANGES : A 182 Gr. F 316

VALVES :
BODY : ASTMA182GRADEF316/ASTM-A-351GRCF8M SS316
TRIM : ASTM A 182 GRADE F 316/ SS 316

Note:
For all austenitic stainless steel Piping, Piping components and Valves, Inter-granular Corrosion Test (IGC) shall be conducted as per following ASTM A 262 practice "B" with acceptance criteria of 60 mills per year (max) for all materials- forged, rolled, wrought and casting.

Or

ASTM A 262 practice "E" with acceptance criteria of "No cracks as observed from 20X Magnifications" for all materials other than castings "Microscopic structure to be observed from 250-X magnification" in addition.

5.5.2 STAINLESS STEEL (NACE)

Sour service requirement shall be in compliance with clause no. 5.2.2 of this document. MOC of stud bolt and nut shall be same as that of CS NACE (cl. 5.4.2).

PIPES : ASTM A 312 Gr. TP 316 L
ASTM A 358 TP 316 L

FITTING: ASTM A 403 Gr. WP 316 L
ASTM A 182 Gr. F316L

FLANGES: A 182 Gr. F 316 L

VALVES: BODY : ASTM A 182 GRADE F 316L / ASTM-A-351 GR CF8M SS316L
TRIM : ASTM A 182 GRADE F 316L / SS 316L

5.6 DUPLEX STAINLESS STEEL MATERIAL

Two grades are indicated in this MOC. However, MOC shall be as per the class and grade indicated in the P&ID.

PIPES : a) ASTM A790 UNS S 32205
b) ASTM A790 UNS S 31803

Note:
On case to case basis for higher thickness if manufacturing of seam less pipe is not possible, ASTM A 928 Class1 & 3 may be used.

FITTINGS: a) ASTM A790 UNS S 32205,
ASTM A182 Gr. F60 UNS S 32205,
ASTM A815 Gr. WP-S/WX UNS S 32205

b) ASTM A790 UNS S 31803,
ASTM A182 Gr. F51 UNS S 31803,
ASTM A815 Gr. WP-S/WX UNS S 31803

FLANGES: a) ASTM A182 Gr. F60 UNS S 32205
b) ASTM A182 F51 UNS S 31803

BOLTING: ASTM A 453 GR 660 Class A

GASKETS: Duplex stainless steel spiral wound with CNAF, Octagonal ring duplex stainless steel UNS S 32205/ UNS S 31803; Maximum hardness 22HRC.

VALVES: BODY-DSS, TRIM –DSS

NOTES:

1. Maximum hardness shall be limited to 25 HRC. Material shall meet the requirement of NACE MR 01-75 along with additional requirements

indicated in clause no. 5.2.3 of this document. This specification is in addition to relevant codes & standards.

2. Maximum temp. Limit shall be limited to 121^0C. For max temp greater than 121^0C, company's approval shall be obtained.
3. Stub end connections are not permitted for branch connection.
4. For butt weld fittings thickness shall be same as pipe
5. DSS shall have approximately equal proportion of Austenitic & ferritic matrix phase (ferritic content: 45-55%) for DSS.

5.7 (A) INCOLOY CLAD PIPING (Incoloy 825)

PIPES: ≤ 6" Seamless Pipe as per ASTM B423 (UNS N 08825) cold finished annealed.

>6" but ≤ 12" Seamless Pipe as per ASTM B423 (UNS N 08825) hot finished annealed. SMYS of hot finished annealed pipe shall as be established considering it as unlisted component of ASME B 31.3 for the temperature range based on actual evaluation after testing.

≥ 14" – API 5L Gr. B / API 5L Gr X52, Cladding Material – Incoloy 825.

FITTING: ≤ 1 ½ " Forged ASTM B564 (UNS N 08825)

2" – 12" Butt welded fitting ASTM B366 (WP NIC MC S)

≥ 14" – from clad steel with single weld seam (joint factor 1), Cladding Material Incoloy 825.

FLANGE: ≤ 12" -- ASTM B564 (UNS N 08825)

≥ 14" -- ASTM A105 with Cladding Material Incoloy 825.

BOLTING: ASTM A453 Gr. 660 Class A.

GASKET: Spiral wound duplex stainless steel with CANF, Octagonal ring duplex stainless steel, Hardness 22HRC

VALVE: ≤ 11/2" Body Forged ASTM B 425/ASTM B 564 (UNS N08825)

Trim Incoloy -825

≥ 2" but ≤ 6" Body Incoloy 825/DSS and Trim Incoloy 825/DSS

≥ 8" Body = (ASTM A 105 + 3mm Weld overlay Incoloy 825)/Solid Incoloy 825/DSS and Trim Incoloy 825/DSS. (See note-4)

5.7 (B) INCONEL CLAD PIPING (Inconel 625)

PIPES: ≤ 12" Seamless Pipe as per ASTM B444 UNS N 06625Gr.1 annealed.
≥ 14" – API 5L Gr. B / API 5L Gr X52, Cladding Material – Inconel 625.

FITTING: ≤ 1 ½ " Forged ASTM B564 (UNS N 06625)
2" – 12" Butt welded fitting ASTM B366 (WP NC MC S) UNS N 06625
≥ 14" – from clad steel with single weld seam (joint factor 1), Cladding Material Inconel 625.

FLANGE: ≤ 12" -- ASTM B564 (UNS N 06625)
≥ 14" -- ASTM A105 with Cladding Material Inconel 625.

BOLTING: ASTM A453 Gr. 660 Class A.

GASKET: Spiral wound duplex stainless steel with CANF, Octagonal ring duplex stainless steel, Hardness 22HRC

VALVE: ≤ 11/2" Body Forged ASTM B 446 UNS N 06625
Trim Inconel -625
≥ 2" but ≤ 6" Body Inconel 625/DSS and Trim Inconel 625/DSS
≥ 8" Body = (ASTM A 105 + 3mm Weld overlay Inconel 625) /Solid Inconel 625/DSS and Trim Inconel 625/DSS. (See note-4)

NOTES:

1. The corrosion resistant alloy shall meet the requirements of ASTM B424, UNS No N 08825 or ASTM B 443, UNS N 06625 as applicable with the following additional stipulated requirements:
   (i) **For Incoloy 825**
      a) Max carbon content shall be 0.025%
      b) Minimum pitting index shall be 32.
         Pitting index = (% Cr + 3.3%Mo)
      c) The minimum cladding thickness shall be 3mm.
      d) Hardness shall be as per NACE MR-01-75/1SO-15156-3.

   (ii) **For Inconel 625**
      a) Max carbon content shall be 0.05%

b) Minimum pitting index shall be 52.
Pitting index = (% Cr + 3.3%Mo)

c) The minimum cladding thickness shall be 3mm.

d) Hardness shall be as per NACE MR-01-75/1SO-15156-3.

2. This shall be in accordance with NACE Standard MR-01-75 and test requirement as per applicable material standard along with requirements indicated below for solid Incoloy/Inconell:
   (a) Mechanical Properties Test.
   (b) Hardness Test.
   (c) Chemical Properties.
   (d) Corrosion Test as per clause No. 5.2.4, (F), (1) & (2) shall be carried out on each heat and test indicated in clause no. 5.2.4(F), (3) shall be carried out only for qualification of vendor not listed in suggested vendor list of ONGC.

3. For thickness of clad pipe and piping items only base material shall be considered.

4. MOC of valve shall be decided based on service.

5.8 CUPRO-NICKEL (90-10)

Cupro-nickel materials are suitable for firewater, seawater & salt-water services. Only following American/British specifications as specified against each product are permitted. Bolting shall be ASTM A193 Grade B7/194 Grade 2H and it shall be Hot dip galvanized as per ASTM 153.

PIPES: ASTM B 466 Copper alloy no. C-70600 or BS 2871 CN 102

FLANGE: EEMUA 145

FITTINGS: 90-10 Cu-Ni

VALVES Body - 5% Ni-AL BRONZE (BS 1400 AB2C), ASTM B 148 C 95800
Trim - MONEL K 500 for sizes up to and including 6” and K400/K500 above 6”

<u>NOTES</u>:

a) 90-10 Cu-Ni piping material thickness EEMUA PUB 144 to be decided based on 16-bar system

b) Blind flanges shall be A 105 with 3 mm 90-10 Cu-Ni overlays.

c) For composite flanges the outer flange shall be ASTM A105 (galvanized) to #150 of ASME B-16.5 up to 24” and ASME B 16.47 A for 22” and 28” &

inner flange shall be 90/10 CU-NI forged for < 2" S.O, 3" to 24" W.N.(For 3" to 24' S.O. Bossed flanges (suitable for welding)
F F material Cu Ni forged (When used with flanged valve use full faced gasket and S.O. Bossed flange).

d) Stud bolts shall be supplied with insulating sleeves and washers.

5.9 COPPER

Copper materials are suitable for potable water (drinking water) services. Only following American/British specifications as specified against each product are permitted. Bolting shall be ASTM A193 Grade B7/194 Grade 2H and it shall be Hot dip galvanized as per ASTM 153/ ASTM 123.

PIPES: Seam less hard drawn H-80/H55 regular Copper to ASTM B 42(UNS NO. C12200)

FLANGES: ISO 7005-3: ASTM B 61(Leaded tin Bronze)

FITTINGS: For less than or equal to 2" ASTM B 124 (UNS C 11000),
For 3 to 4" ASTM B42 (UNS NO C 12200)

VALVES: BODY, BONNET, TRIM – ASTM B 61(Leaded tin Bronze)
Stem, Wedge disc, Body seat ring - Forged Brass as per ASTM B 124 UNS NO. C37700 (No casting)

NOTES:

a) Stud bolts to be supplied with insulating sleeves & washers.

b) Blind flanges for Cu. piping shall be ASTM A105 with 3 mm copper overlays

c) Composite flange: Outer Flange : ASTM A 105 (Galvanized)
Inner Flange : ASTM B 124 (UNS NO. C 11000)
≤ 2" S.O.
≥ 3 to 4" W.N
For S.O. and W.N. Flange FF valves shall be used for size 2 to 4" only. FF solid slip on class 150 flange to ISO-7005-3: ASTM B 61 shall be used.

d) Threading on pipes is not allowed. Screwed are only for vents and drains.

5.10 GLASS REINFORCED EPOXY

Refer Annexure- 1

Note: Valve material for GRE piping shall be suitable to services for which GRE piping is used.

5.11 POLY VINYL CHLORIDE

PVC materials are suitable for sewage water & chemical services. Only following American specifications as specified against each product are permitted:

PIPES	:	ASTM D 1785
FLANGES	:	ASTM D 2466/ASTM D 2467
FITTINGS	:	ASTM D 2466/ASTM D 2467
VALVES	:	BODY – PVC-ASTM D 1784 TRIM – As per manufacturer Standards.

NOTES:

a) Complete piping system shall be enclosed in Galvanized carbon steel pipe for protection against mechanical damage. The size of cover shall be one size higher than the line size.

b) The hydro test pressure shall be 1.5 times the design pressure.

5.12 CHLORINATED POLY VINYL CHLORIDE

CPVC materials are suitable for sodium hypo chloride services. Only following American specifications as specified against each product are permitted

PIPES	:	ASTM F 441
FLANGES	:	ASTM F 439 up to 3”/ ASTM F 437 for Threaded fittings.
FITTINGS:		ASTM F 439 S.W up to 3”, ASTM F437 Union up to 3”/ / ASTM F 437 for Threaded fittings.
VALVES	:	Body ASTM- D-1784 Trim –As per manufacturer standards.

NOTES:

a) Complete piping system shall be enclosed in Galvanized carbon steel pipe for protection against mechanical damage. The size of cover shall be one size higher than the line size.

b) All CPVC material shall be type IV Gr. 1 complying to ASTM-D-1784 (Class-23447-B)

c) Union shall be provided on one side of SCRD valves to facilitate its removal.

d) Maximum test pressure for valve and fabrication assembly shall be 225 psi.

5.13 TITANIUM

Following American specifications as specified against each product are permitted.

PIPES	:	ASTM B 861 Grade 2/ B862 Grade2
FLANGES	:	½" to 6" # 150 ANSI , Lap Joint Flange -Inner Flange ASTM B 363 Gr WPT2, Outer Flange ASTM A 105 or ½" to 6" #150 WN, RF to ASTM B 381Gr F2 ½" TO 6" Blind Flange ASTM B 381Gr F2
FITTINGS	:	ASTM B 363 Gr WPT2 Seam less/ BW (Lap joint stub end with Neo prene insulating ring)
VALVES	:	Body/Trim: ASTM B 381Gr F2/ASTM B 367Gr C2

5.14 MATERIAL IDENTIFICATION

All piping materials (pipe, fittings, flanges, valves, piping specialties etc., shall be supplied with mill certified test reports and certificates to identify the type of steel, composition, heat number and any special testing.

The Contractor shall furnish to the Company with one (1) copy of all mill certificates for all the materials purchased by the Contractor duly certified by company approved third party inspection agency.

The contractor shall mark with double blue stripes for NACE materials.

5.15 SUPPORTS AND MISCELLANEOUS

Any material shall not be welded directly on process piping. If situation arises then prior approval of Company shall be sought during detail Engineering & shall note that the material welded directly to pressure retaining pipe work shall be of similar quality as the pipe work, including impact requirements, if any, for a length measured from the vessel wall of at least 150 mm. The material of such items beyond this point may be structural

quality A283 Gr. C. or equal/superior (contractor to substantiate with sufficient information & documentary evidence).

5.16 BOLTING

For carbon steel and stainless steel flanged piping systems, stud bolts shall comply with ASTM A193-B7 and ASME B1.1. Nuts shall be heavy hexagon semi-finished per ASTM A194-2H and ASME B18.2.2. Carbon steel studs and nuts shall be hot dip spun galvanized in accordance with ASTM A153.

For carbon steel (NACE) flanged piping systems, stud bolts shall comply with ASTM A193-B7M and ASME B1.1. Nuts shall be heavy hexagon semi-finished per ASTM A194-2HM and ASME B18.2.2. Carbon steel (NACE) studs and nuts shall be hot dip spun galvanized in accordance with ASTM A153.

Duplex stain less steel flange, studs and nut shall be ASTM A 453 Gr 660 Cl A.

5.17 GASKETS

Gasket materials must be such that the internal fluids shall have no harmful or corrosive effects on them.

Gaskets for raised face flanges shall be spiral wound, non-asbestos filled, with 316 stainless steel in accordance with ASME B16.20, with the exception that compressed fibre gaskets complying with ASME B16.21 are acceptable for cooling water service.

Full-face gaskets for flat face flanges shall be made from 3-mm (1/8") thick compressed, oil-resisting non-asbestos sheets, or neoprene. Materials shall be specified in the pipe class Data Sheets.

Ring gasket for ring type joint shall be octagonal and shall be as per ASME B 16.20.
Rings for API 5000# flanges shall conform to API 6A. Type RX rings shall be used.

5.18 CERTIFICATION DOCUMENTS

All pressure parts material certification shall be traceable to heat numbers. Certificates, including all material certificates, Mechanical test certificates, welding qualification certificates, heat treatment certificates and hydrostatic test certificates duly certified by

company recognized third party inspection agency shall be available at final inspection and for counter signature by the certification authority and stored by the Contractor for a minimum of 5 years after acceptance of the piping by the Company. Pressure retaining parts shall be clearly marked to allow verification of tractability.

6. TECHNICAL NOTES OF PIPING COMPONENTS

6.1 PIPE

Pipe dimensions shall be in accordance with ASME B36.10 for carbon steel pipe and ASME B36.19 for stainless steel pipe and BS2871 Part 2 for 90/10 Cu-Ni pipe work up to DN 500 (20”).

Nominal pipe sizes DN 30 (1¼”), DN65 (2½”), DN85 (3½”) and DN 125 (5”) shall not be used except where they are required for connections to equipment of standard design or where specific velocities must be maintained. When these sizes are used on equipments, the connecting piping shall be increased or decreased to standard sizes as close to equipment as practical.

Company approval shall be sought prior to using such components.

The minimum nominal pipe size shall be DN20 (¾”) except for air, instrument air, water and manufacturer’s standard equipment piping.
All nipples shall be made from pipe of same quality as that of parent piping

Carbon steel pipe DN40 (1½”) and smaller used for process lines and other lines carrying flammable or toxic fluids shall have wall thickness at least Schedule 80.

Galvanized pipe shall not be bent or welded. Piping requiring bending, welding or threading shall be galvanized after fabrication.

All CS Pipes shall be seamless up to 16”. Above 16” pipes shall be SAW with 100% radiography. Weld joint factor to be considered shall be as per ASME B 31.3/ASME B 31.4/ASME B 31.8 (As applicable).

All 90/10 Cu-Ni pipes shall be seamless up to 16”. Above 16” pipes shall be SAW with 100% radiography. Weld joint factor to be considered shall be as per ASME B 31.3.

All stainless steel including DSS piping up to 8" shall be seamless. Above 8" shall be EFW with 100% radiography. Weld joint factor to be considered shall be as per ASME B 31.3.

All pipes shall have bevel end for size equal to and above 2" and plain end below 2".

6.2 TUBING

All tubing, unless otherwise noted, shall be 316 SS/316L SS seamless with wall thickness appropriate for the service & piping class.
Refer to the Specification FS 3507 for Instrumentation Bulk item requirements.

6.3 FITTINGS

All unions DN25 (1") and larger shall comply with BS 3799.

No street elbows or threaded bushings shall be used in piping. Hexagonal bushings (but no flush bushings) may only be used with tubing fittings for connection to instruments, or as otherwise specifically approved by the Company.

The thickness of reducing fittings shall match the wall thickness of the higher schedule pipe wall. The fitting wall thickness shall be tapered on a 1:4 gradient to ensure that the pipefitting wall thickness matches the lower schedule pipe wall.

All 90º-weld elbows shall be long radius, unless restricted by available space. Short radius (SR) welding elbows shall not be used unless absolutely required for clearance purpose with prior approval from the company. If short radius weld elbows are used, they shall be de-rated to 80% of the calculated allowable working pressure if subject to pulsations.
Thickness for fitting shall be same as that of corresponding pipe. Short radius elbows, which have been de-rated as specified above, may require a wall thickness greater than that of the connecting pipe.

Welded fittings materials shall be compatible with the piping material.

Fittings DN40 (1-½") and smaller shall be socket weld except as dictated.

Fittings DN50 (2") and larger shall be butt welded except as dictated.

Mitred joints shall not be used.

6.4 BRANCH CONNECTIONS

Branch connections shall be in accordance with API RP 14E. Branch connections for non-ferrous materials shall be as per manufactures standard with prior approval from Company. Contractor to prepare and list the branch tables in piping class data sheets. The lists shall show requirements for branches at 90º angles to the header & branching component with sufficient details.

6.5 FLANGES

Flanges shall be in accordance with ASME B16.5 for DN50 to DN600 and with ASME B16.47 Series A for flanges DN650 and larger. They shall be raised face unless otherwise shown on the individual vessel data sheets and/or drawings. Non-standard size flanges shall be calculated in accordance with ASME Code Rules & prior approval shall be sought from company.

Flanges shall be raised face up to #600 rating and shall be RTJ above #600 rating.

API ring joint 5000-psi flanges shall comply with API 6A.

ASME ring joint (RTJ) flanges shall have octagonal grooves conforming to ASME B 16.5.

API ring joint flanges shall conform to API specification 6A.

The bolt-hole pitch circle diameter for orifice flanges DN50, DN80 and DN100 shall be 1.6 mm smaller than specified in ASME B16.5.

Flange bolt-holes shall straddle the piping vertical and horizontal centerlines.

Flanges in the piping shall be kept to a minimum. Flanges shall be installed only to facilitate construction, maintenance and inspection and in cases where process conditions dictate.

Spectacle blinds rather than spade blinds shall be provided where required. Thickness of blinds shall be calculated in accordance with ASME B31.3. Pairs of spacers and blinds shall be used instead of spectacle blinds of size DN 350 and larger.
Class 400 flanges shall not be used unless required to match nozzles of compressors, pump, turbines, etc. of standard design supplied by equipment manufacturers.

Smooth finish on flanges shall be 32-63 AARH.

Wherever face finish is not mentioned, it shall be serrated spiral/concentric

6.6 BOLTING

Flange bolting of nominal size M40 (1-½") and above shall be subject to bolt tensioning. Flange bolting shall be a full threaded alloy steel stud bolt, each with two heavy hexagonal nuts. Stud bolts shall have full continuous threads and have lengths in accordance with B16.5 with the provision that a minimum of one (1) thread and a maximum of three (3) threads outside each nut and complete with 2 nuts to facilitate bolt tensioning.

Stud bolts shall be used for all piping closures except where tapped wafer valves dictate the use of machine bolts.

6.7 VALVES

Valve bodies, seals, etc., shall be in accordance with the design pressure and design temperature of the applicable project Specification. Valves may be supplied with higher design pressure or design temperature trims in order to meet the service requirements.

Each valve shall be supplied with a stainless steel tag, attached to the gland bolting, or hand wheel, with stainless steel wire, bearing the applicable valve identification, Tag Number and Purchase Order number.

Ball valves shall comply with API 6D or BS EN ISO 17292/BS 5351 (below 2"). All ball valve body patterns shall be long pattern to ASME B16.10 and shall be quarter-turn design. Soft seals and seats for ball valves shall be suitable for the maximum applied differential pressure, the service fluid and the specified pressure and temperature ratings.

As a general philosophy, ingress of sand particle is envisaged in well fluid and injection water services unless indicated otherwise elsewhere in the bid hence all valves are required to be metal seated in well fluid and injection water service. Trim of the metal seated Ball Valves as a minimum shall be Tungsten Carbide coated. Minimum surface hardness shall be 1050 Vickers and minimum coating thickness of finished and machined surface of Tungsten Carbide shall be 150µ to 250µ. Uses of soft seated valves are allowed only when no erosive effect is envisaged due to abrasive particle. Contractor is required to establish the same during detail engineering.

Check valves shall comply with BS 1868 or BS 5352/BS EN ISO 15761 or API 602. Swing type check valves shall have bolted bonnets. Where check valves are placed in vertical runs, valves shall be equipped with flapper stops. The stops shall not be connected to bonnet taps in any way.

In pulsating, turbulent or high velocity flow, to avoid possibility of slamming in check valve tilting disc slam check valve shall be preferred.

For heavy check valves, provisions shall be available for lifting by way of lugs, eyebolts and such standard devices

Gate valves shall comply with API 600, 602 or 603 as applicable. Gate and butterfly valves shall be used in “clean” non-hydrocarbon services like firewater services only.
In hydro carbon services for #900 & above, gate valves may be used in hydrocarbon service in place of ball valves for sizes up to 1.5”.

Globe valves shall comply with API 602/ BS 1873/ BS 5352/BS EN ISO 15761.

Plug valves shall comply with BS 1873/ BS 5353.

Butterfly valves shall comply with BS 5155/BS EN 593/ API 609

Steel and alloy valves shall be designed and tested in accordance with the applicable codes as per type & class of valves are as under: -

1. ASME 150# - Designed and examined in accordance with ASME B16.34 and tested in accordance with API 598.

2. ASME 300# through ASME 2500# - Designed and tested in accordance with API 6D for ball valves & other applicable codes as per type of valves.

3. API 2000# through API 5000# - Designed and tested in accordance with API 6A.

4. All hydrocarbon valves with non-metallic seats and seals including ball valve and butterfly valve shall be fire-safe, tested in accordance with API 607, API 6FA, ISO 10497 or BS 6755 PART II. The ball valves shall be fire safe in accordance with the requirements of either API 6FA (for trunnion ball valves) or API 607/ISO 10497 (for floating ball valves). All valves shall be witnessed & certified by a company approved third-party agency.

5. Metal Seated Ball valve shall be tested as per API 6D or API 6A as applicable. Leakage rate shall not be more than Rate – "B" as per API 6D/ISO 5208.

Valves i.e. Ball, Gate, Globe, Choke and Needle used in service with more than 230ppm of H2S shall be designed for Fugitive Emission from external leakage paths of Valve stem seals and body joints/Seals. Each type of valve design shall be certified by type testing as per BS EN 1SO 15848-1. Each valve as a minimum shall comply with:

(a) Tightness Class as per Table -1 (Based on type of stem seal) and Leakage from body seals as per Table-2 of BS EN ISO 15848-1.

(b) Endurance Class - CO1 of BS EN ISO 15848-1

(c) Temperature Class – (t-RT) & (t200^{0}C) of BS EN ISO 15848-1

The type test for each design of Valve shall be witnessed and certified by ONGC approved Third Party Inspection Agency.

During production of Valves, each valves which has been type tested as per BS EN ISO 15848-1 shall be revalidated by testing for tightness class as per BS EN ISO 15848-2. Tightness class test for each Valve shall be witnessed and certified by ONGC approved Third Party Inspection Agency.

Gate, globe, angle, ball and check valves shall be supplied with replaceable seats. Where replaceable seats are not available, the valve seat shall be stellited and welded into the valve body.

Valves designated "LO" (Locked Open) or "LC" (Locked Closed) on drawings, shall be provided with locking devices. Valves shall be furnished with the locking tab hardware installed.

Open-ended valves shall be equipped with threaded plugs or blind flanges.

a) Ball shall be solid type unless otherwise specified.
b) All valves shall be forged type for 1 ½'' & below.
c) All valves shall be supplied with position indicator.
d) All trunnion mounted ball valves shall be supplied with double block & bleed arrangement

Every block valve shall be provided with a lever, handle, or hand wheel as necessary to operate the valve.

Gear operators shall be heavy-duty lubricated type and shall be completely housed in a weatherproof enclosure.

Socket-weld valves shall be bolted body or top entry design, allowing removal of seats/seals for heat protection, prior to welding, without loss of assembly orientation. Single piece valve bodies, or valves bodies assembled by screwed-together components, shall not be used with socket-weld ends.

If an overlay weld-deposit is used for the body seat ring, seating surface, the seat ring base material shall be at least equal to the corrosion resistance of the material of the shell.
All valves shall be reduced bore unless & otherwise specified. Full bore valves shall be provided for all piggable lines.

Valve body thickness shall be as per relevant valve standard, shall be in accordance with ASME B16.34.

Valve body of Cast material of Construction shall be 100% radiographed irrespective of rating in accordance with ASME B16.34 Annexure B.

Valves body other than Cast material of Construction shall be radio graphed to the following extents: -

ASME 150#, DN600 or smaller	25%
ASME 150#, DN650 or larger	100%
ASME 300#, DN400 or smaller	25%
ASME 300#, DN450 or larger	100%
ASME 600# and higher	100%
Carbon steel to NACE requirements	100%
Stainless and high alloy steel (Cast or Forged)	100%
Other alloys (Cast or Forged)	100%

UT in place of radio grapy is acceptable for forged valve in accordance with ASME B16.34.

Socket-weld-end valves with non-metallic seats or seals shall be provided with 80mm long nipples having materials and thickness equivalent to those specified in the relevant piping specifications. These nipples shall be welded to the valves on both ends before the packing, seats and seals are fitted.

Stem protection is required for all carbon steel gate and globe valves where 13% Chromium trims are specified. The stems shall be totally enclosed in sleeves, which shall be packed with grease.

By-pass requirement for gate valves shall be provided as per following. Basic design of bypass shall be MSS-SP-45 & ASME B-16.34

ASME 150 class	on sizes 26” and above.
ASME 300 class	on sizes 16” and above.
ASME 600 class	on sizes 6” and above.

ASME 900 class	on sizes 4” and above.
ASME 1500 class	on sizes 4” and above.
ASME 2500 class	on sizes 3” and above.

By-pass valve shall be a globe valve. The sizes shall be as under:

On main valve	≤ 4”	½” or more
On main valve	> 4” but <10”	¾” or more
On main valve	≥10”	1” or more.

Valves with by-pass shall have the direction of flow marked on the main valve. By-pass attachment to the main valve body shall not be screwed. All fillet welds for by-pass installation shall be 100% examined by DP/MP test.

The by-pass piping arrangement shall be such that clearance between main valve body & bypass assembly shall be the minimum possible for layout reasons.

Material of construction of yoke shall be minimum equivalent to body/bonnet material.

Stelliting / hard facing by deposition shall be minimum 1.6 mm.

Soft-seated Ball, plug & butterfly valves shall be supplied with antistatic devices.

Soft seated Ball valves shall be floating ball type/trunnion mounted type as per following:

150#	8” & below	floating ball
	10” & above	trunion mounted
300#	4” & below	floating ball
	6” & above	trunion mounted
600#	1.5” & below	floating ball
	2” & above	trunion mounted

For metal seated ball valve, trunion mounted ball valve in place of floating ball valve is acceptable. However, vise-versa is not acceptable.

Generally the valves are hand wheel or lever operated. Gear operation shall be provided as under:

VALVE TYPE	CLASS	SIZE REQUIRING GEAR OPER.
Gate valve & diaphragm	150 class	14” and larger
	300 class	14” and larger
	600 class	12” and larger
	900 class	6” and larger
	1500 class	3” and larger
	2500 class	3” and larger
Globe valve	150 class	10” and larger
	300 class	8” and larger
	600 class	6” and larger
	900 class	6” and larger
	1500 class	3” and larger
	2500 class	3” and larger
Ball/plug Valve (other than pressure balance plug valve)	150 class	6” and larger
	300 class	6” and larger
	600 class	4” and larger
	900 class	3” and larger
	1500 class	3” and larger

Where gear operator is not called for as per above but vendor recommends a gear operator, he shall highlight such cases & obtain company’s approval. For basis of finalization of gear operator vendor shall follow the guide line as mentioned below:

Torque and Gear Ratio required shall be based on guide line as indicated below:

Valve hand wheel diameter shall not exceed 750mm and lever length shall not exceed 500mm on either side. Effort shall not exceed 35 Kg at hand wheel periphery. Failing to meet above criteria vendor shall offer gear operated Valves even if valve does not fall into the category indicated in the above table

The following guide line shall be followed for gear box/hand wheel/lever:

Hand wheel -operated:
Max. Single hand forces: 200 N.
Max. Diameter of hand wheel: 750 mm.
(Max. torques 150 Nm).

Lever-operated:
Max. Force: 350 N.
Max. Length of lever: 600 mm.
(Max. torques 270 Nm).

Manual and gear operated valve shall be operated without use of any extension device. The torque/force value shall be recorded during the test. Torque value recorded shall not be more than indicated above.
Valve hand wheel/Lever shall be solid malleable Iron to ASTM A 47 (or any other applicable standard)/ Solid SS-316 material as per suitable MOC of the valve for required torque. In case of Malleable Iron, hand wheel shall be galvanized with thickness suitable to marine environment and subsequently painted as per FS 2005.

Vendor shall declare the operating torque value of each valve based on above guide line and carryout the required test as indicated in clause no. 6.7.1.1 through 6.7.1.7

6.7.1 TEST REQUIREMENTS OF VALVES

This clause elaborates minimum mandatory tests required to be carried out by the vendor at his premises, at fabrication yard of LSTK Contractor and offshore location. The tests indicated against this clause are related to the valve only, other material tests as required by relevant clause of this specification shall be complied by the vendor in addition to the tests indicated under this clause.

6.7.1.1 SHUT DOWN VALVE

(a) Material tests as per clauses no. 5 and sub clauses of FS 2004 A.
(b) Radiography of shell/body of the valve.
(c) DPT or MPT (as applicable) of the items/parts of the valve.
(d) Fire type test with respect to design of the valve.
(e) Hydrostatic Shell Test.
(f) Hydrostatic Seat Test.
(g) Pneumatic Seat Test.
(h) Check Torque of the Valve against zero differential pressure (as indicated in relevant para. of clause 6.7 of FS 2004A).
(i) Check Torque of the Valve against rated full differential pressure (as indicated relevant para. of clause 6.7 of FS 2004A).
(j) Check Torque of the Actuator as per FS 2004D.
(k) Type test of Fugitive Emission as per BS EN ISO 15848-1(If applicable).
(l) Fugitive Emission test as per BS EN ISO 15848-2 (If applicable).
(m) Check surface preparation and all the stages of protective coating as per FS 2005.
(n) Functional Test of the Valve – Shut Down Valve be pressurized to full differential rated pressure with liquid same as used for hydro test and thereafter shut down valve be operated by giving full rated pressure to actuator and rated voltage to Solenoid Valve. Full opening

and closing shall be checked. The operation of the valve shall be smooth and jerk free. This activity shall be repeated 5 times at manufacturer's location.

Sequence of operation in the entire test shall be alternate with one cycle with zero differential pressure across the valve and one cycle with full differential pressure across the valve.

Same activity shall be repeated 5 times with zero differential pressure across the valve on installation at fabrication yard and 5 times at offshore.

(o) Valve shall be API Monogrammed which are designed under API Codes and Standards, as applicable.

6.7.1.2 MOTORIZED BALL VALVE

a) Material tests as per clauses no. 5 and sub clauses of FS 2004 A.
b) Radiography of shell/body of the valve.
c) DPT or MPT (As applicable) of the items/parts of the valve.
d) Fire type test with respect to design of the valve.
e) Hydrostatic Shell Test.
f) Hydrostatic Seat Test.
g) Pneumatic Seat Test.
h) Check Torque of the Valve against no differential pressure zero differential pressure (as indicated in relevant para. of clause 6.7 of FS 2004A).
i) Check Torque the Valve against rated full differential pressure (as indicated relevant para. of clause 6.7 of FS 2004A).
j) Check Torque of the Actuator as per FS 2004D.
k) Type test of Fugitive Emission as per BS EN ISO 15848-1 (If applicable).
l) Fugitive Emission test as per BS EN ISO 15848-2 (If applicable).
m) Check surface preparation and all the stages of protective coating as per FS 2004D.
n) Functional Test of the Valve – Motor Operated Valve (MOV) shall be pressurized to full rated differential pressure with liquid same as used for hydro test and thereafter MOV shall be operated by giving full rated power to actuator. Full opening and closing shall be checked. The operation of the valve shall be smooth and jerk free. There shall be not abrupt fluctuation of current except during brake to open and Brake to close. The operation of the valve shall be smooth and jerk free. This activity shall be repeated 5 times at manufacturer's location

Sequence of operation in the entire test shall be alternate with one cycle with zero differential pressure across the valve and one cycle with full differential pressure across the valve.

Same activity shall be repeated 5 times with zero differential pressure across the valve on installation at fabrication yard and 5 times at offshore.

(o) Valve shall be API Monogrammed which are designed under API Codes and Standards, as applicable.

6.7.1.3 BALL VALVE.

(a) Material tests as per clauses no. 5 and sub clauses of FS 2004 A.
(b) Radiography of shell/body of the valve.
(c) DPT or MPT (As applicable) of the items/parts of the valve.
(d) Fire type test with respect to design of the valve.
(e) Hydrostatic Shell Test.
(f) Hydrostatic Seat Test.
(g) Pneumatic Seat Test.
(h) Check Torque of the Valve against no differential pressure zero differential pressure (as indicated in relevant para. of clause 6.7 of FS 2004A).
(i) Check Torque of the Valve against rated full differential pressure (as indicated relevant para. of clause 6.7 of FS 2004A).
(j) Not Applicable.
(k) Type test of Fugitive Emission as per BS EN ISO 15848-1 (If applicable).
(l) Fugitive Emission test as per BS EN ISO 15848-2 (If applicable).
(m) Check surface preparation and all the stages of protective coating as per FS 2005.
(n) Functional Test of the Valve – Ball Valve shall be pressurized to full rated differential pressure with liquid same as used for hydro test and thereafter shall be operated by single hand. Full opening and closing shall be checked. The operation of the valve shall be smooth. The operation of the valve shall be smooth and jerk free. This activity shall be repeated 5 times at manufacturer's location

Sequence of operation in the entire test shall be alternate with one cycle with no differential pressure across the valve and one cycle with full differential pressure across the valve.

Same activity shall be repeated 5 times with zero differential pressure across the valve on installation at fabrication yard and 5 times at offshore.

(o) Valve shall be API Monogrammed which are designed under API Codes and Standards, as applicable.

6.7.1.4 GATE VALVE.

(a) Material tests as per clauses no. 5 and sub clauses of FS 2004 A.
(b) Radiography of Shell/Body of the valve.
(c) DPT or MPT (As applicable) of the items/parts of the valve.
(d) Hydrostatic Shell Test.
(e) Hydrostatic Seat Test.
(f) Pneumatic Seat Test.

(g) Check Torque of the Valve against no differential pressure zero differential pressure (as indicated in relevant para. of clause 6.7 of FS 2004A).
(h) Check Torque of the Valve against rated full differential pressure (as indicated relevant para. of clause 6.7 of FS 2004A).
(i) Type test of Fugitive Emission as per BS EN ISO 15848-1 (If applicable).
(j) Fugitive Emission test as per BS EN ISO 15848-2 (If applicable).
(k) Check surface preparation and all the stages of protective coating as per FS 2005.
(l) Functional Test of the Valve – Gate Valve shall be pressurized to full rated differential pressure with liquid same as used for hydro test and thereafter shall be operated by single hand. Full opening and closing shall be checked. The operation of the valve shall be smooth. The operation of the valve shall be smooth and jerk free. This activity shall be repeated 5 times at manufacturer's location

Sequence of operation in the entire test shall be alternate with one cycle with no differential pressure across the valve and one cycle with full differential pressure across the valve.

Same activity shall be repeated 5 times with zero differential pressure across the valve on installation at fabrication yard and 5 times at offshore.

6.7.1.5 GLOBE VALVE

(a) Material tests as per clauses no. 5 and sub clauses of FS 2004 A.
(b) Radiography of Shell/Body of the valve.
(c) DPY or MPT (As applicable) NDT of the items/parts of the valve.
(d) Hydrostatic Shell Test.
(e) Hydrostatic Seat Test.
(f) Pneumatic Seat Test.
(g) Check Torque of the Valve against no differential pressure zero differential pressure (as indicated in relevant para. of clause 6.7 of FS 2004A).
(h) Check Torque of the Valve against rated full differential pressure (as indicated relevant para. of clause 6.7 of FS 2004A).
(i) Type test of Fugitive Emission as per BS EN ISO 15848-1 (If applicable).
(j) Fugitive Emission test as per BS EN ISO 15848-2 (If applicable).
(k) Check surface preparation and all the stages of protective coating as per FS 2005.
(l) Functional Test of the Valve – Globe Valve shall be pressurized to full rated differential pressure with liquid same as used for hydro test and thereafter shall be operated by single hand. Full opening and closing shall be checked. The operation of the valve shall be smooth. The operation of the valve shall be smooth and jerk free. This activity shall be repeated 5 times at manufacturer's location

Sequence of operation in the entire test shall be alternate with one cycle with no differential pressure across the valve and one cycle with full differential pressure across the valve.

Same activity shall be repeated 5 times with zero differential pressure across the valve on installation at fabrication yard and 5 times at offshore.

6.7.1.6 CHECK VALVE

(a) Material tests as per clauses no. 5 and sub clauses of FS 2004 A.
(b) Radiography of Shell/Body of the valve.
(c) DPT or MPT (As applicable) of the items/parts of the valve.
(d) Hydrostatic Shell Test.
(e) Hydrostatic Seat Test.
(f) Pneumatic Seat Test.
(g) Type test of Fugitive Emission as per BS EN ISO 15848-1 (If applicable).
(h) Fugitive Emission test as per BS EN ISO 15848-2 (If applicable).
(i) Check surface preparation and all the stages of protective coating as per FS 2005.
(j) Functional Test of the Valve – Check Valve shall be pressurized gradually with liquid same as used for hydro test in the direction of flow and the minimum pressure at which the valve allows flow to take place shall be recorded.

6.7.1.7 NEEDLE VALVE.

(a) Material tests as per clauses no. 5 and sub clauses of FS 2004 A.
(b) Radiography of Shell/Body of the valve.
(c) DPT or MPT (As applicable) of the items/parts of the valve.
(d) Hydrostatic Shell Test.
(e) Hydrostatic Seat Test.
(f) Pneumatic Seat Test.
(h) Check Torque of the Valve against no differential pressure zero differential pressure (as indicated in relevant para. of clause 6.7 of FS 2004A).
(i) Check Torque of the Valve against rated full differential pressure (as indicated relevant para. of clause 6.7 of FS 2004A).
(k) Type test of Fugitive Emission as per BS EN ISO 15848-1 (If applicable).
(l) Fugitive Emission test as per BS EN ISO 15848-2 (If applicable).
(m) Check surface preparation and all the stages of protective coating as per FS 2005.
(n) Functional Test of the Valve – Needle Valve shall be pressurized to full rated differential pressure with liquid same as used for hydro test and thereafter shall be operated by single hand. Full opening and closing shall be checked. The operation of the valve shall be smooth. The operation of the valve shall be smooth and jerk free. This activity shall be repeated 5 times at manufacturer's location

Sequence of operation in the entire test shall be alternate with one cycle with no differential pressure across the valve and one cycle with full differential pressure across the valve.

Same activity shall be repeated 5 times with zero differential pressure across the valve on installation at fabrication yard and 5 times at offshore.

6.8 SPECIALTY ITEMS

Specialty Items shall be supplied, designed, tested & installed as specified in the Project Specification for specialty items spec.2004D.

7. PIPING SYSTEM DESIGN

7.1 GENERAL

Design calculations for pressure/temperature wall thickness requirements, vibrations, thermal expansion and contraction, pipe weights and flexibility shall be carried out in accordance with ASME B31.3 and ASME SEC VIII and submitted to the Company for acceptance.

Piping components shall be located where they can safely be operated (where necessary) and maintained. Access shall be provided to such components, which are located out of reach from the platform deck. The use of extended hand wheel stems or chain wheels shall be avoided.

Dead ends on distribution and collection headers shall be blind flanged.

Long radius elbows shall generally be used, but for pigged lines long radius 5D bends are required. Short radius elbows shall be avoided unless essential for clearances. Cold-formed bends are not permitted. Fabricated mitre bends can only be used on gas turbine exhausts.

7.2 PIPE ROUTING

Piping shall be routed so as to have the short runs and minimize pipe supports whilst providing sufficient flexibility for thermal expansion and contraction and mechanical movement. Expansion and swivel joints shall be avoided.

Large bore piping shall be designed to minimize pressure drops. Smaller bore piping shall be routed in groups where practical along main pipe racks.
Piping shall be kept within the deck boundaries.

The number of flanges and unions shall be minimized. The piping carrying hydrocarbon/hazardous chemicals in the safe area shall be of continuous length with welded joints such that no valves, regulators, flanges etc. are located in the safe area. One breakable joint in the safe area at the consumer points is permitted, with adequate safeguards.

Piping shall be routed to avoid trip and overhead hazards.

Consecutive elbows in different planes shall be avoided.

Pipe routing shall allow sufficient space for bolting up flanges or for line-up clamps to be used for field welds. Refer “Piping Clearances” described in piping fabrication (spec 2004-B).

Piping passing through firewalls shall be sealed with fire-retarding sleeves.

Primary utility (air, steam and water) connections on piping shall be DN20 (¾") or larger through the first block valve.

All instrument air and fuel gas connections shall be from the top of the associated headers.

The angle between any branch and its header shall not be less than 45º.
Scraper tees shall be provided for lines, which are to be pigged as per approved P&IDs.

Dimensional rules for piping design are as follows:

Min pipe dia. for thermo-well connection on straight run pipe	DN 100.
Minimum pipe diameter for thermo-well connection on 90º elbow	DN 80
Pipe racks to be sized to allow for the future equipment	+20%.
Minimum run size of piping in racks	DN 50
Spacing of instrument air take-offs along pipe rack headers in process areas.	≥3000 mm
Minimum slope of HP and LP flare headers	1:100
Minimum slope of open drain header	1:100
Minimum slope of closed drain header	1:100
Minimum slope of pump suction lines where vapour may be present	1:50

7.3 PIPE SUPPORTS

Refer piping design criteria (Vol II, sec 3.3). Piping shall be suitably supported to prevent sagging, mechanical stresses vibrations and consequent fatigue, while allowing for thermal and structural movement. Piping shall be adequately supported for the weight of piping filled with water, with attached components unsupported, subject to wind, seismic, insulation and any other applicable loads. The supports shall prevent excessive stresses in the piping and in the nozzles of the equipment to which it is connected.

Small bore instrument tubing and piping shall be adequately supported and protected from impact damage.

Bracing shall be provided for small-bore branches in piping adjacent to vibrating machinery.

Supports used for Cu-Ni piping shall be lined with soft packing strip or pad free from ammoniac components (EG: NEOPRENE ASTM D 2000) to prevent chafing and undue stressing and also to permit free expansion/contraction of Cu-Ni pipes between anchors (Selection of Grade & Type of Neoprene Rubber will be based on Design Temperature & as per ASTM D-2000)

7.4 PIPE WAYS

Generally the piping should be routed in either platform north/south or east/west in established pipe ways. All lines running platform north/south shall be a different elevation from lines running platform east/west, as far as practical. Where possible, a minimum of 400 mm or more between changes in elevation of pipe runs in pipe ways shall be maintained.

7.5 PIPING CLEARANCES

The minimum clearance for maintenance access shall be 750 mm. The following design constraints shall also apply.

Minimum height from underside of pipe or insulation to high point of deck level or platform	200 mm
Control valve arrangement: Preferred bottom of pipe (BOP) of control valve above deck level or platform.	400 mm
For meter runs, the minimum clearance between BOP and deck is	760 mm
Pipe spacing: Minimum space between pipes without flanges (after allowing for insulation and lateral movement)	100 mm
Minimum space between pipes with flanges (largest flange to pipe) (after allowing for insulation and Lateral movement)	100 mm
- Minimum distance from pipe to face of steel work (after allowing for insulation)	50 mm
- Minimum distance from flange to face of steel work, etc.	50 mm
Valve installations and access: Preferred height of hand wheel from deck or platform:	
* horizontally mounted valves * vertically mounted valves	1000/1350 mm 1100/1300 mm

Maximum height from local deck or platform level to center line of horizontal hand wheel without platform on chain wheel	
Vertically-mounted valves (DN100 and larger) (DN 80 and smaller)	2000 mm 2250 mm
* maintenance or isolation (except where temporary platforms can be used and at pipe racks)	3000 mm
Use of chain wheels and extension stems shall be kept to a minimum. Chain shall clear operating level by:	1000 mm

7.6 FLANGED CONNECTIONS

Flanged connections shall be minimized, being used only where frequent dismantling will be required, where specific flanged spools are needed, where needed to provide clearances for equipment removal, or for piping class or material changes.

7.7 THREADED PIPE-WORK

Threaded piping shall not be used to carry hydrocarbons.

Piping DN40 (1½") and smaller, when used for services up to 1900 kPa (g) (275 psig), may be threaded with prior approval of Company.

Screwed fittings shall be rated at least 20.7 Mpa (3000 psi).

Bushings, close nipples and street elbows shall not be used.

Pipe threads shall conform to ASME B1.20.1.

Cu-Ni pipe work shall not be threaded. Adapters can be used at valves or equipment.

7.8 CHANGES IN MATERIALS

Where dissimilar piping materials are connected insulation gaskets shall be provided to prevent galvanic corrosion.

7.9 VENTS, DRAINS AND BLEEDS

High points on all lines shall be provided with DN20 (¾") minimum plugged or flanged connections for venting during hydrostatic tests. For lines carrying hydrocarbons or other toxic fluids, the vents shall be piped to the nearest vent header.

All ODD cups shall be provided with temporary (welded/bolted) plates as cover so as to prevent the clogging/chocking of drain lines during drilling operation in addition to grid plates.

Low points in lines shall be provided with drain connections of nominal sizes as follows: -

Line Size	**Drain Size**
DN15 (½")	DN15 (½")
DN20 (¾") TO DN 100 (4")	DN20 (¾")
DN150 (6") to DN250 (10")	DN25 (1")
DN300 (12") and larger	DN25 (1") to DN 40 (1½")

Drains on lines other than firewater shall be provided with valves and plugged. Firewater drains do not need valves.

All hydro-test vents and drains in hydrocarbon service shall be DN 20 with valves and steel plugs unless noted otherwise.
A hydrostatic vent and drain philosophy shall be developed during detail design and shown on the isometrics.

7.10 CORROSION INHIBITION AND MONITORING PIPE WORK

Corrosion monitoring fittings shall be located as close as practical to the pipe work being monitored, where servicing access is easy and away from sources of vibration. Clearance shall be provided for the removal of the injection quills and monitoring probes, suiting each nozzle orientation and the length of the associated probe. Corrosion probe nozzles shall be mounted on the underside of the pipes.

7.11 RELIEF VALVES

Relief valve assemblies shall be installed in the vertical position, as close to the pressure source as possible, and shall be provided with permanent platform access. Relief valves shall be bolted directly to vessel and equipment nozzles.

Relief valve piping shall be designed to withstand reaction forces and moments caused by the valve discharging.

Piping from relief valves to closed systems shall slope toward the headers and enter them from above, or, where that is not practical, shall have DN20 (¾") drains in safe areas. Headers shall have at least 1:100 slopes toward downstream.

Refer to the Project Specification for General Instrumentation.

7.12 CONTROL VALVES

Control valves shall preferably be installed in horizontal lines, with the actuator in the vertical position. Each valve shall be located as close as possible to the item of plant under control and shall be easily accessible from the deck or permanent platform.

Where control valves are less than line size, reducing spools shall be made long enough to permit bolt removal.

Consideration shall be made for removal or withdrawal of valves or part of valves for maintenance.

Refer to the Project Specification for Instrumentation for additional requirements.

7.13 ISOLATIONS

Piping shall be designed, so the connections to equipment and vessels can be isolated for safe maintenance. This may be accomplished by providing for the insertion of blind flanges at strategic points or removable spools if blinding is not practical due to line size. All vessels containing hydrocarbons or other hazardous fluids and which would involve personnel entry during maintenance require such blinds.

Blinds shall be located so that insertion can be made from the deck or permanent platforms or access ways. Permanent hook eyes shall be provided above blinds, which weigh more than 25 kg. Where blinds are not required for isolation, valves must be provided for safe isolation.

Double block and bleed isolation shall be provided wherever shown in P&ID.

7.14 FIRE SUPPRESSION SYSTEM

Refer design criteria of the Mechanical and safety & life saving equipment (Vol II sec 3.7) and functional safety specification (spec 5102) for fire suppression attached elsewhere in bid package.

7.15 CUPRO-NICKEL PIPE WORK

Cupro-Nickel or Copper-Nickel (Cu-Ni) piping shall be used for firewater deluge systems.

All Cu-Ni piping shall be designed such that velocity in piping does not exceed the values given in project specifications. However, in special circumstances such as downstream of control valves, orifice plate, etc, where fluid velocity may exceed those given in the design criteria special material such as DSS/SDSS/Monel subject to company's approval may be used to withstand higher velocities. When one side is ASME Class 150 Cu Ni and other side is of higher rating carbon steel, a spool of carbon steel having one end of higher rating CS flange and other of lower rating CS flange shall be inserted which also acts as a sacrificial piece

Supports for Cu-Ni piping shall be lined with soft packing pads, neoprene or similar, which shall be free of ammonia compounds.

7.16 COPPER PIPING

Copper (Cu) piping shall be used for potable and other clean water systems.

7.17 GRE PIPING SYSTEMS

Glass-Reinforced Epoxy (GRE) piping shall be used for water services where there is little risk of physical impact, typically for overboard lines.

When a GRE pipe penetrates a fire rated wall or floor, the GRE shall be substituted by a flanged metallic spool piece, fabricated from a material suitable for the proposed service.

GRE piping shall be enclosed in one size higher metallic material when there is risk of moderate physical impact.

7.18 PIPING ON AREAS SUBJECT TO DIFFERENTIAL MOVEMENT

The design of the piping on such areas (if any) shall take into account the differential movement between the two structures under extreme (100 years) storm conditions and thermal expansion

and contraction. Flexibility analysis of the piping systems shall be carried out. The Contractor shall provide any necessary pipe loops and supports.

7.19 PIPING AT EQUIPMENT

Piping at equipment shall be arranged so that the equipment can be removed easily by dismantling / adjusting the piping adjacent to the equipment without the need to dismantle any component of the equipment.

Equipment will not be used to anchor piping. Forces transmitted to equipment at tie-in points will be within the Equipment Supplier's recommended limits.

Piping connected to rotating equipment shall be designed and supported to minimize the transmission of vibrations from the machines. The Contractor shall carry out flexibility analysis of this pipe work to prevent exceeding, allowable nozzle loads as defined by the equipment manufacturer.

7.19.1 PIPING AT HEAT EXCHANGERS

Cooling water piping to shell & tube exchangers shall be arranged so that water will not drain from the outlet when water supply fails.

Exchanger piping shall be arranged so that the exchanger can be removed as one unit and so that the tube bundle can be pulled after disconnecting channel piping.

Piping connections to exchangers shall be designed and properly aligned to allow for hot & cold service and to limit the stress on exchanger nozzles to within allowable levels.

Filters shall be provided in lines to cooling fluid inlets.

7.19.2 PIPING AT PUMPS

Piping at pumps shall be designed and supported so that equipment can be dismantled or removed with a minimum number of temporary supports and without dismantling valves and piping other than the spool that connects to the pump. Clearances shall permit installation of blind flanges against block valves when the service is hazardous and the removal of pump rotating elements.

Pump suction lines shall end with at least four diameters of straight pipe with the same nominal size as the suction flanges. If reducers are required on suction lines, they shall be eccentric and installed flat side up.

Recycle lines shall be provided to allow minimum flows required for pumps.

Pressure relief lines shall be provided for positive displacement pumps.
Valves shall be located as close as possible to the pump nozzles as practical. Isolation valves on pump suction lines shall be full-bore ball type. Isolation valves on discharge lines shall be located downstream of check valves.

Pump suction lines in which, vapour may be present shall be inclined downward towards the pumps with slopes of at least 1:50.

Strainers shall be provided in all pump suction lines. Permanent Y-type or basket strainers shall be provided for reciprocating and rotary pumps. The open area of strainers shall be at least 300% of the cross-sectional area of the pipe. The piping shall be arranged so that the filter or strainer element can be removed from the flanged joints without altering the piping, supports or pump alignment.

7.19.3 PIPING AT TURBINES

Air Inlet and Exhaust duct termination shall be positioned away from hazardous areas, and areas frequented by personnel or any open ended or filtered inlet ducts.

Fuel gas piping within the turbine enclosure shall be subject to strict control with respect to the number and type of flanged joints, fully welded being preferred. Flanged joints shall be provided only for connection to the equipment and for isolation and shut down valves.

7.19.4 PIPING AT DIESEL ENGINES

All piping connected to diesel engines shall be arranged in such a manner that adequate flexibility is maintained so as to effectively isolate the piping from any engine vibration. Piping shall not be routed directly over diesel engines.
Fuel lines shall not be run over exhaust piping or any location where leaks would cause fuel to impinge on to hot surfaces. Fuel lines shall incorporate local isolation valves.

The fuel oil header shall not be dead-ended.

Silencers, where installed in suction and discharge piping, shall be located as close as possible to the engine.

Air intake openings shall be located away from any hazardous area, face toward the prevailing wind direction and be in such a position as to limit the ingress of dust (e.g. salt crystals) and moisture.

7.19.5 LAUNCHERS/RECEIVERS

The "barrel" of the launchers/receivers shall be designed as per ASME-B31.4/31.8 (as applicable) using a design factor of 0.5 and "end closure" shall be designed as per ASME Section VIII, Division-I. Corrosion allowance as per applicable piping class & Material of construction for intended service should be considered in design of barrels. Weld efficiency factor shall be as per ASME-B31.4/31.8 (as applicable)

Launchers and receivers if installed horizontally shall have 5º slopes in the direction of flow. The internal diameter of launcher/ receiver shall be at least 2" higher than the pipe diameter.

Barrel length shall be at least 1-½ times and 2 ½ times as long as the pig selected/specified for launchers and receivers, respectively.

Eccentric type reducers shall be used on all horizontal launchers and receivers with flat side down while concentric type shall be used for vertical launchers/receivers. A spool piece of sufficient length of line pipe size shall be provided with launchers/receivers to ensure an effective seal before the pig enters the first block valve.

Scraper barrel shall be equipped with quick opening hinged type closures. Closures shall be rated for intended service and shall be provided with suitable interlock safety devices to prevent opening under pressure.

Launching/receiving stations shall be provided with an indicating device to detect and indicate the passage of a scraper or sphere.

Launchers and receivers of 600 mm (24 inch) OD and larger shall be equipped with loading/unloading trays to facilitate handling of heavy scrapers and spheres.

All branches from the barrel shall be taken by means of weldolets / sockolets.

Suitable handling system for inserting/retracting the scraper/pig from the barrel shall be provided for each launcher/receiver. The system shall be self contained complete with handling and lifting devices.

7.19.6 PIPING FOR OFFSHORE HOOK-UP

Hook-up piping shall be minimized as far as possible. Piping systems shall be designed so that the contractor in his fabrication yard can perform the maximum level of testing, mechanical completion and commissioning work.

7.20 PIPING LAYOUT REQUIREMENTS

The layout of equipment and piping shall be based on following principles to provide neat and economical layout, allowing for easy supporting and adequate flexibility to meet equipment allowable nozzle load.

1. To locate all equipments identified on equipment list.
2. To comply with standards, regulations, codes, piping specifications and sound engineering practices.
3. To maximize safety of personnel, equipment and facilities.
4. To ensure operability & maintainability of equipment.
5. To provide means of escape & access for fire fighting.
6. To satisfy all requirements indicated in process documents (P&ID's)
7. To minimize shutdown duration.

All piping drawings shall be prepared to scale 1:331/3 with accuracy of +75mm and in metric system only. All piping for new platform shall be modeled using3D modelling software as indicated elsewhere in bid package. Isometrics, Piping GADS, supports GAD's, material take off, interference checking, colour coding, structural module, instrument module, Design review model etc. shall be generated from the 3D model. The contractor shall make interim delivery of 3D model on the completion of each miles stone activity and final delivery on completion of the project. Contractor shall furnish the equipment lay out, safety route drawing, piping layout drawing (GAD), for company's review & approval. Contractor shall furnish one 3D modeling software terminal (dual type) along with dedicated modeling engineer at design center for online review of piping/equipment modeling to ONGC.

However, for modification jobs, piping plan shall be prepared in latest version of MICROSTATION/AUTOCAD.

All the information regarding instrument, equipment and line identification, direction of flow for lines, elevations and dimensions shall be clearly marked on piping plans. Efforts shall be made to provide maximum possible information including operating platforms, ladders, monorails, other material handling equipment, electrical cable and instrument trays, etc. shall be shown on piping plans to avoid reference to other drawings.

For any portion of a line where complete details i.e. dimensions, elevations etc. cannot be furnished in piping plan, a detailed isometric for that portion shall be indicated at a suitable place in the same GAD only. As far as possible all such details shall be shown together at a particular space provided for the purpose.

Piping plans shall show all lines indicated in Piping and Instrument diagrams. Separate line list as per format shall be prepared & submitted to the Company.

Pipe support standard drawings shall be submitted to company for review and separate pipe support drawings shall be generated by marking pipe supports on piping plans.

Piping arrangement drawings for skid-mounted equipment/vessels shall be furnished separately for review and approval. Piping arrangement inside skids need not be shown on piping GAD's.

All distribution/collection headers shall have their dead ends blind flange. Piping Isometrics shall be prepared for all lines and furnished for information.

All the future lines shown in P&ID's shall be routed and shown as chain dotted on GAD's with full details indicating dimensions, line numbers, etc. All future/spare piping connections envisaged in the existing scope of work will be terminated with blind flange. Requirement of spectacle blind and valve at the termination shall be provided if indicated in P&ID. The following shall be the minimum to be shown on the piping drawings wherever applicable:

Line Number

Instrument/specialties/equipment Tag Number

Instrument Connections

Orientation of North arrow

Battery/Area limit as per area division/skid

Title block and drawing nos. as per area division/drawing schedule

Key plan

Reference drawings

Legends and Notes

Table of Nozzle data orientation and location

Match line, continuation drawing number

Location of equipment as per equipment layout; P&ID's special notes.

Dimension & equipment elevations with reference to data sheets.

8. PROTECTIVE COATINGS & INSULATION

Painting and Protective Coatings:

Painting, protective coatings and the procedures used for the preparation of surfaces shall be specified in the Project Specification for Protective Coatings spec 2005.

Flanges shall be painted on the flange edges, inside bolt-holes, and up to the gasket surface.

Insulation:

Piping shall be insulated where indicated on drawings. The piping to be insulated shall be grit blasted and painted as per FS 2005 except for finish coat and only then, insulation to be applied as per the Project Specification for Insulation of Piping and Equipment spec 2006.

9. PIPING SPECIFICATION INDEX

DESIGN CODE: ASME B31.3

SN	CODE	RATING	MATERIAL	SERVICE
1	A1	150#	CS	NOTE-1
2	B1	300#	CS	NOTE-1
3	D1	600#	CS	NOTE-1
4	E1	900#	CS	NOTE-1
5	A2	150#	CS	Glycol
6	B2	300#	CS	Glycol
7	D2	600#	CS	Glycol
8	E2	900#	CS	Glycol
9	A1N	150#	CS-NACE	Hydrocarbon liquid & vapour

10	B1N	300#	CS-NACE	Hydrocarbon liquid & vapour
11	D1N	600#	CS-NACE	Hydrocarbon liquid & vapour
12	E1N	900#	CS-NACE	Hydrocarbon liquid & vapour
13	F1N	1500#	CS-NACE	Hydrocarbon liquid & vapour
14	G1N	2500#	CS-NACE	Hydrocarbon liquid & vapour
15	XG1	API-5000	CS	Hydrocarbon liquid & vapour
16	XG1N	API-5000	CS-NACE	Hydrocarbon liquid & vapour
17	A3	150#	CS-Galv./SS	Instrument Air
18	B3	300#	CS-Galv./SS	Instrument Air
19	D3	600#	CS-Galv./SS	Instrument Air
20	A4	150#	CS-Galvanized	Potable Water-Non Drinking
21	A5	150#	90/10 Cu-Ni	Fire water/Raw sea water
22	A6	150#	SS	Exhaust
23	A8	150#	CS (GALVANISED)	Overboard line
24	A9	150#	SS-316	Lube oil & service oil
25	B9	300#	SS-316	Lube oil & service oil
26	D9	600#	SS-316	Lube oil & service oil
27	E9	900#	SS-316	Lube oil & service oil
28	A10	150#	SS-316L-NACE	Hydrocarbon liquid & vapour
29	B10	300#	SS-316L-NACE	Hydrocarbon liquid & vapour
30	D10	600#	SS-316L-NACE	Hydrocarbon liquid & vapour
31	E10	900#	SS-316L-NACE	Hydrocarbon liquid & vapour
32	F10	2500#	SS-316L-NACE	Hydrocarbon liquid & vapour
33	A12	150#	Titanium	Ferric Chloride/Chemical
34	A13	150#	COPPER	Potable water- Drinking
35	A1LN	150#	INCOLOY 825	Hydrocarbon liquid & vapour
36	A22	150#	SS-316L	Corrosion Inhibitor/Chemical
37	B22	300#	SS-316L	Corrosion Inhibitor/Chemical
38	D22	600#	SS-316L	Corrosion Inhibitor/Chemical
39	E22	900#	SS-316L	Corrosion Inhibitor/Chemical
40	A23	150#	DSS (UNS S 32205)	Hydrocarbon liquid & vapour
41	B23	300#	DSS (UNS S 32205)	Hydrocarbon liquid & vapour
42	D23	600#	DSS (UNS S 32205)	Hydrocarbon liquid & vapour
43	E23	900#	DSS (UNS S 32205)	Hydrocarbon liquid & vapour

44	F23	1500#	DSS (UNS S 32205)	Hydrocarbon liquid & vapour
45	G23	2500#	DSS (UNS S 32205)	Hydrocarbon liquid & vapour
46	A15	150#	INCOLOY 825	Hydrocarbon liquid & vapour
47	B15	300#	INCOLOY 825	Hydrocarbon liquid & vapour
48	D15	600#	INCOLOY 825	Hydrocarbon liquid & vapour
49	E15	900#	INCOLOY 825	Hydrocarbon liquid & vapour
50	XG15	API 5000	INCOLOY 825	Hydrocarbon liquid & vapour
51	XH15	API 5000	INCOLOY 825	Hydrocarbon liquid & vapour
52	A15A	150#	INCONEL 625	Hydrocarbon liquid & vapour
53	B15A	300#	INCONEL 625	Hydrocarbon liquid & vapour
54	D15A	600#	INCONEL 625	Hydrocarbon liquid & vapour
55	E15A	900#	INCONEL 625	Hydrocarbon liquid & vapour
56	PE1	900#	CS	Hydrocarbon liquid & vapour
57	PB1N	300#	CS-NACE	Hydrocarbon liquid & vapour
58	PD1N	600#	CS-NACE	Hydrocarbon liquid & vapour
59	PE1N	900#	CS-NACE	Hydrocarbon liquid & vapour
60	A7	150#	CPVC	Sodium hypochlorite
61	A3S	150#	GRE	Fire Water (raw)
62	A3S-1	150#	GRE	Fire Water-Raw sea water (Dry)
63	A5S	150#	GRE	Produced water, sewage water/Gray Services, Cooling water, Open drain, Utility water,
64	A11	150#	DSS (UNS S 31803)	Hydrocarbon liquid & vapour
65	B11	300#	DSS (UNS S 31803)	Hydrocarbon liquid & vapour
66	D11	600#	DSS (UNS S 31803)	Hydrocarbon liquid & vapour
67	E11	900#	DSS (UNS S 31803)	Hydrocarbon liquid & vapour
68	F11	1500#	DSS (UNS S 31803)	Hydrocarbon liquid & vapour
69	A16	150#	SDSS	Hydrocarbon liquid & vapour
70	B16	300#	SDSS	Hydrocarbon liquid & vapour
71	D16	600#	SDSS	Hydrocarbon liquid & vapour
72	E16	900#	SDSS	Hydrocarbon liquid & vapour
73	A14	150#	PVC	Sewage Water

74	F1	1500#	CS	Note-1
75	F10	1500#	SS-316L	Hydrocarbon liquid & vapour
76	F 15	1500#	Incoloy-825	Hydrocarbon liquid & vapour

NOTES:

1. This standard is used for injection water, vent gas, diesel fuel, process drain water, process drain hydrocarbon, blow down, nitrogen services. However, MOC shall be as per P & ID.
2. Corrosion allowance is indicated in Spec.2004A Clause no.5.3.
3. Material description & special requirements are listed in piping design criteria.

4. Contractor shall prepare the piping class data sheet and shall furnish to Company for review & approval.

GENERAL REQUIREMENTS

10 GENERAL REQUIREMENTS

10.1 PRE-QUALIFICATION CRITERIA AND TESTS FOR MANUFACTURERS (NEW VENDORS)

Suggested vendor list is listed elsewhere in bid package. The vendors who are not listed in suggested vendor list shall be required to furnish the following documents for Company's review for the purpose of pre-qualification.

1. The item/equipment should be in satisfactory service in offshore oil & gas operations for a minimum period of 2 years. This shall be supported with performance feedback from the end-users (The firm using the item/equipment for its offshore oil and gas operations) or repeat purchase orders from the same end user with a minimum time gap of two years of delivery.

2. Catalogue and Drawings for the product.

3. The name(s) & location of Manufacturer/Forging source/Raw material source (Mill) etc.

4. The manufacturer shall be qualified based on results of these tests & information furnished and Company's decision in this regard shall be final and binding on the bidder.

5. The list of manufacturing facilities and quality control equipment.

6. The tests certificates specified in clause 5 shall be conducted by the mill/supplier for the purpose of initial qualification. The test results shall be submitted to the company for approval prior to placement of order. In case the supplier has already carried out all these tests and the test results are certified by a recognized independent inspection agency (viz. Lloyds, BV, DNV etc.) all such test reports/certificates/document shall be forwarded to the company for review and approval. The Company shall assess the capability of the supplier upon scrutiny and verification of the documents submitted. Company's decisions in this regard shall be final and binding on contractor.

7. Qualification for NACE material shall be made product wise, material wise, type of product wise (Seamless or welded), type of valve wise irrespective of thickness/size/type of fittings/pressure rating. Following test certificates/documents to be required:

    1. Steel making procedure from raw material supplier including specific details and confirmation to requirements as per relevant codes & standards.

2. Following test certificates, duly witnessed and certified by any of the Company approved third party inspection agency (as listed in clause 10.2) as per relevant codes & standards and requirements listed below, shall be furnished for Company's approval.

2.1 Chemical composition of heat & finished product. This shall meet the requirements of chemical composition indicated in relevant codes & standards.

2.2 Mechanical Tests on heat & finished product as per relevant codes & standards.

2.3 Hardness test on the heat & finished product as per relevant codes & standards.

2.4 Corrosion tests (HIC, SSCC & inclusion count check) on the finished product of past supplies as per relevant codes & standards. The test shall be applicable to all materials for sour service application (viz: CS (NACE), DSS, INCOLOY CLAD MATERIAL).

2.5 Other test for DSS & INCOLY cladded material: Other test as indicated in clause 5.7 & 5.8 (sour service requirements for DSS & INCOLY CLADDING MATERIAL)

2.6 The requirements stated in relevant codes & standards shall also be fully complied in order to meet the qualification of the product on each heat & finished product.

3. Each certificate shall indicate product name, heat number, raw material source/forge shop/cast shop/manufacturer (as applicable) and shall clearly indicate witnessed and certified with proper signature and seal of the inspecting agency. Any certificate not meeting these requirements shall be rejected.

4. Over and above these certificates, a certificate from the Company approved third party inspection agency shall be furnished containing the following:

4.1 Scope to clarify the extent of involvement of the Inspection Agency for the job order.

4.2 Certification that the sample for the test was taken from the finished product (e.g. pipe, fittings, flange, valve or plate etc.) manufactured from the heat indicated in the certificates and indicate the names of raw material source (Mill)/forge shop cast shop/manufacturer (as applicable) employed in manufacture of the finished product.

5. Quality Assurance Manual shall be furnished for Company's review, which should include the schemes for raw material quality assurance, on line process quality assurance,

product quality assurance, storage and traceability of products, personal quality assurance and quality control procedures.

6. Bidder/manufacturer shall note that for manufacturing of the quoted items, the same sources (i.e. forging source, raw material source, manufacturer etc.) shall be utilized which was employed to manufacture the product on which prequalification tests are carried and approved. Subsequent to qualification, a change of manufacturer/forging source/raw material source (mill) shall not be permitted. In the event that the manufacturer desires to effect any change in any of the above, the manufacturer shall seek fresh qualification as indicated above.

10.2 SUGGESTED THIRD PARTY INSPECTION AGENCIES

M/s Lloyd registers of Shipping (LRS)

M/s Bureau Veritas (BV)

M/s Det Norske Veritas (DNV)

M/s Certification Engineers India ltd (CEIL)

M/s Societe Generate De Surveillance (SGS)

M/s Moody's international

M/s TUV International

M/s ABS

If any of the party is nominated or specified for the job work, then supplier must follow the Company's Requirements.

10.3 QUALITY ASSURANCE

The manufacturer, supplier & his sub supplier shall operate a quality system satisfying the applicable provisions of ISO 9000 (SERIES) or Company agreed equivalent standard, commensurate with the goods & services provided.

10.4 SAFETY PROVISIONS

It is the intent of the company that operational hazards to be reduces to a minimum. Contractor shall use sound engineering judgments to complete an installation that will perform the required process functions without compromising this aim. The platform shall be designed in accordance with API RP 14C, Recommended practice for analysis, design, installation & testing of basic surface safety system on the offshore production platform (latest edition). The contractor shall also follow the safety provisions indicated elsewhere in bid package.

10.5 RECEIPT & STORAGE

The contractor shall develop the comprehensive plan for receipt, storage and release of all equipments released in contractor's care including item supplied by others or free issued by the company. This plan shall provide means to immediately establish the status & locations of any items, which has been issued to the contractor.

The contractor shall be fully responsible for equipment issued & shall provide secure facilities to provide a storage environment, which shall protect the equipment to the vendor's requirement. Any equipment damaged after issue to the contractor shall be repaired, reinstated or replaced by the contractor at company's decision.

10.6 SPARES

Manufacturer shall recommend and provide the spares required for start up and commissioning for all specialties/ vessels or any other item.

Manufacturer shall recommend and provide the spares needed for one-year operation and maintenance for all specialties.

10.7 WARRANTIES

A. The contractor shall agree to warrant all the pipes, fittings, flanges, gaskets, bolting, valves, specialties & vessels furnished by him to be free from defects in design, material, & workmanship.

B. The contractor shall agree to warrant all the pipes, fittings, flanges, gaskets, bolting, valves, specialties & vessels furnished by him will satisfy the requirements of intended use and to be suitable for application.

C. The contractor shall agree to warrant all the pipes, fittings, flanges, gaskets, bolting, valves, specialties & vessels furnished by him for any repair or replace under present tender, which proves to be defective within a period of 12 months from date of completion and handing over to the operation group of company.

D. The contractor shall be solely responsible for obtaining manufacture's performance warranty for all pipes, fittings, flanges, gaskets, bolting, valves, specialties & vessels purchased by him and shall produce the warranty certificate to the company.

E. Where materials of construction or the application of items recommended by contractor do not confirm with the manufacture's recommendation, the contactor shall assume the

equivalent of manufacturer's warranty and in the event of malfunction or damage resulting from this misapplication, the contractor will not be released from this warranty.

10.8 DOCUMENTATION

The contractor shall provide one set of soft copies on CD/Hard disc for approved drawings/ documents & materials for all pipes, fittings, valves, flanges, piping specialties & vessels documents to the piping engineer designated for the project in additions to the company's project requirement. Further, hardcopy any of the above documents shall be submitted as and when required by company. The contractor shall submit the "ORIGINALS" on demand by company to verify the duplicate (Xerox) copies for test certificates review. On placement of order, the manufacturer/mill shall carry out all the production tests as indicated in relevant clauses of this document and submit reports to Company for review and approval. The test reports shall be submitted to Company before dispatch of material from the mill. The approved certificates from company shall be submitted to the piping engineer of company at fabrication site.

GLASS REINFORCED EPOXY **Annexure – 1**

1.1 Scope

This specification contains minimum requirements for design, manufacture, qualification, quality control, testing, site fabrication, installation and certification of (GRE) composite material piping for facilities on offshore platforms.

1.2 Design / Operating Data

The design / operating data such as pressure, temperature, flow rate, structural load, etc. shall be provided by the user section or the selection / design of GRE pipelines for the relevant services.

1.3 Design & Manufacture of GRE piping

i. The piping and fittings shall be manufactured with epoxy resin as per ASTM D 2996 with thickness to suit the design pressure, taking into account the hydrostatic test pressure at the time of installation i.e. 1.5 times the design pressure. The manufacturer shall give full details of this methodology of arriving at the quoted thickness, including lower confidence limit static (LCLs). The hydrostatic design stress shall be calculated as : 0.5 X LCLs. However, all the components of piping system shall have minimum 3.0 mm reinforced wall thickness. Sea water piping shall be designed for a nominal velocity of 5 m/s. The fire water piping system shall also be designed for blast over pressures.

ii. The piping and fittings shall be manufactured by using epoxy resin and the structural glass fiber shall be E-glass. The fittings shall be manufactured by the same piping manufacturer and compatible adhesives shall also be supplied by the manufacturer.

iii. Inner surface of piping and fittings shall have at least 0.5 mm thick reinforced resin rich liner with C-glass or synthetic fibres and with resin content at least 65%.

iv. For UV protection, UV stabilizer will be added in the resin used for manufacturing GRE piping.

v. Filler shall not be used in the resin during manufacturing process of GRE piping.

vi. The piping and fittings shall be joined by the bell & spigot joint using adhesives or butt and wrap joint.

vii. Flanges shall be heavy-duty filament wound as per ASTM D 4024 and ASME B 16.5.

viii. Stress analysis shall be carried out for estimation of stresses in circumferential and longitudinal direction. Stress analysis shall include, but not limited to, all anchors, guides and supports. The piping system shall be designed in such a way to minimize stresses resulting from surge or transient pressures on account of valve closures or other condition resulting in charge in fluid velocity and those resulting from movements such as expansion and contraction from pressure and temperature differences.

ix. Epoxy resins and additives used in the manufacture of potable water piping and fittings shall satisfy the requirements of FDA / NSF / WHO or other Indian regulatory Authorities for potability of water.

1.4 Qualification & Quality Control of GRE Piping

i. The piping and fittings shall be qualified for pressure rating as per ASTM D 2992. Manufacturer shall enclose the test report and calculations.

ii. For quality control, the short term hydrostatic pressure (STHP) of at least one sample per production lot shall be determined in accordance with ASTM D 1599 at standard laboratory temperature and the value should not be less than mean of STHP for the representative product established in the qualification test. The test report for qualification and quality control shall be certified by reputed certifying agencies like LRS, DNV, BV, ABS, TUV, Vetco Tuboscope.

iii. Test certificates shall be provided for use of GRE piping, fittings, O-rings, gaskets and adhesives in potable water applications as per FDA /NSF / SHO or other Indian regulatory Authorities.

iv. The fire water piping shall qualify endurance testing requirements as per level 3 requirements of IMO Resolution A 753(18) or as latest version of ISO standard 14692-2 for glass reinforced plastics piping in Petroleum and Natural Gas Industries.

v. The GRE piping including all its components for dry portion of fire water system shall be designed such that line is capable of withstanding initially fire up to maximum of 5 minutes by jet fire, followed by flowing water from deluge system by which time the line gets filled with water due to actuation of deluge system. The heat flux of impinging flame shall be decided based upon relevant codes and standard.

vi. The GRE piping shall conform to the fire endurance tests for dry condition in accordance with appendix I of IMO resolution A. 753 (18), 1993.

1.5 Fabrication & Installation of GRE Piping

i. The piping and fittings shall be fabricated and installed as per UKOOA's "Specifications and Recommended Practice for the use of GRP Piping Offshore", March 1994, ISO 14692-1/2/3/4(Petroleum and Natural Gas Industries-Glass Reinforced Plastic Piping).

ii. All GRE/GRP piping shall be fabricated and installed under the supervision of manufacturer/Manufacturer's representative certified by the manufacturer.

iii. All GRE piping shall be conductive and grounded through metallic parts in the system such as valves, pumps, etc. and as per manufacturer's recommendations.

iv. GRE piping & components which remain dry during normal operation of a platform; such as drain lines shall be applied intumescent coating for fire insulation / protection as per applicable standard/application. While deciding type of intumescent coating toxicity of the smoke shall also be considered. Fire insulation material should be such a type that does not require the use of reinforcing mesh.

1.6 Certification Requirements of GRE Piping.

Offered product shall have valid class and type certificate from reputed certifying agencies like LRS, DNV, BV, ABS

1.7 List of Codes & Standards for (GRE) Composite Material Piping

ASTM D 2992	Standard Practice for Obtaining Hydrostatic or Pressure Design Basis for "Fiberglass" (Glass-Fiber-Reinforced Thermosetting-Resin) Pipe and Fittings.
ASTM D 2996	Standard Specification for Filament-Wound "Fiberglass" (Glass-Fiber-Reinforced Thermosetting Resin) Pipe
ASTM D 2105	Standard Test Method for Longitudinal Tensile Properties of "Fiberglass" (Glass Fiber Reinforced Thermosetting Resin) Pipe and Tube
ASTM D 2143	Standard Test Method for Cyclic Pressure Strength of Reinforced, Thermosetting Plastic Pipe.
ASTM D 2517	Standard Specification for Reinforced Epoxy Resin Gas Pressure Pipe and Fittings.
ASTM D 2997	Standard Specification for Centrifugally Cast "Fiberglass" (Glass-Fiber-Reinforced Thermosetting-Resin) Pipe details the specifications for machine made glass fiber reinforced thermosetting resin pressure pipe.
ASTM C 581	Standard Practice for Determining Chemical Resistance to Thermosetting Resins.
ASTM D 570	Test Method for Water Absorption of Plastics.
ASTM D 2290	Standard Test Method for Apparent Hoop Tensile Strength of Plastic or Reinforced Plastic Pipe by Split Disk Method.
ASTM D 2412	Standard Test Method for Determination of External Loading Characteristics of plastic pipe by parallel – plate Loading sets forth methods.
ASTM D 2924	Standard Test Method for External Pressure Resistance of "Fiberglass" (Glass Fiber Reinforced Thermosetting Resin) Pipe.
ASTM D 5685-01	Standard Specification for "Fiberglass" (Glass Fiber Reinforced Thermosetting Resin) Pressure Pipe Fittings.
ASTM D 638	Standard Test Method for Tensile Properties of Plastics.
ASTM D 1598	Standard Test Method for Time to Failure of Plastic Pipe Under Constant Internal Pressure.
ASTM D 1599	Standard Test Method for Resistance to short time Hydraulic

	Pressure of Plastic Pipe, Tubing and Fittings.
UKOOA	Specification and Recommended Practice for the Use of FRP Piping.
API Spec 15 LR	Low pressure fiberglass line pipe.
API Spec 15 HR	High pressure fiberglass line pipe.
API RP 15 TL 4	Recommended Practice for Care and Use of Fiberglass Tubulars.
ASME B 16.5	Pipes, Flanges and Flange Fittings.
ASME B 31.3	Process Piping.
ASME BPVC Section X	Boiler & Pressure Vessel Code.
ASTM D 695	Test Method for Compressive Properties of Rigid Plastic.
ASTM D 696	Test Method for Coefficient of Linear Thermal Expansion of Plastic.
AWWA C 950	Standard for Fiberglass Pressure Pipe.
BS 5480	Specification for Glass reinforced plastic (GRP) pipes, joints and fittings for use for water supply or sewerage.
BS 6464	Specification of reinforced plastic pipes, fittings and joints for process plants.
ASTM D 648	Test for deflection temperature of plastics under flexural loads.
ASTM D 2310	Classification for machine made reinforced thermosetting resin pipe.
ASTM D 1652	Test Method for epoxy content of epoxy resins.
ASTM D 2343	Test Method for Tensile Properties of Glass Fiber Strands, Yarn and Roving use in Reinforced plastics.
ASTM D 2344	Apparent Inter Laminar Shear Strength of Parallel Fiber Composites by Short Beam Method.
ASTM D 2393	Standard Test Method for Viscosity of Epoxy Resin and Related Components.
ASTM D 2471	Standard of Test Method for Gel Time and Peak Exothermic Temperature of Reacting Thermosetting Resin.
ASTM D 2563	Standard Test Method for Classifying Visual Defects in Glass Reinforced Plastics Laminate Parts.
ASTM D 2583	Standard Test Method for Indentation Hardness of Rigid Plastics by mean of Barcol Impresser.
ASTM D 2584	Test Method for Ignition Loss of Cured Reinforced Resins.
ASTM G 53	Weathering QUV Weatherometer.
UKOOA	Guidelines for Fiber Reinforced Use Offshore.
USCG PFM 1-98	US Coast Guard Guide on Fire test requirements for plastic pipe.
IMO A 753(18)	Guidelines for application of plastic pipes on ships.
ISO 14692 Part 1-4	Petroleum & Natural Gas Industries – Glass Reinforced Plastics Piping.

FUNCTIONAL SPECIFICATION

FOR

PIPING FABRICATION AND INSTALLATION

Prepared / Revised By	Peer Reviewed By	Reviewed By	Approved By	Total No. of Pages	Date	Rev. No.
NST	PS	SKP	MS	28	20.01.2022	4

REVISION STATUS RECORD

PS	GJ	JSS	31	07.12.06	3
BLS	MP	JSS	30	10.01.05	2
PS	MP	PKM	29	18.05.04	1
PREPARED / REVISED BY	REVIEWED BY	APPROVED BY	TOTAL No. OF PAGES	DATE	REV. No.

CONTENTS

1. **INTRODUCTION**
1.1 General
1.2 Application of this Document
1.3 Contractors Responsibility
1.4 Sub-Contractors

2. **CODES & STANDARDS**
2.1 Codes, standards & regulations
2.2 Project specifications
2.3 Mandatory Indian Statutory Requirements

3. **SCOPE OF WORK**
3.1 General
3.2 Scope of supply

4. **ENVIRONMENTAL DESIGN CRITERIA & UTILITIES**
4.1 Seismic & transportation loads
4.2 Design life

5. **GENERAL REQUIREMENTS**
5.1 General requirements
5.2 Dimension
5.3 Documentation

6. **MATERIALS**
6.1 General specifications
6.2 Material identification
6.3 Supports & miscellaneous

6.4 Bolting
6.5 Gaskets

7. **FABRICATION**
7.1 General
7.2 Flanging & bolting
7.3 Threaded & socket weld piping
7.4 Brazed piping
7.5 Pipe supports
7.6 Valves
7.7 GRE piping system
7.8 Penetrations
7.9 Piping at equipment
7.10 Piping at instrumentation

8. **TOLERANCES**

9. **TESTING REQUIREMENTS**

10. **IDENTIFICATION & REALEASE OF DELIVERY**

11. **INSTALLATION**

12. **CLEANING**

13. **PROTECTIVE COATING**

14. **SHIPPING & HANDLING**

1. INTRODUCTION

1.1 GENERAL

This specification gives the general requirements for the fabrication, installation, inspection and testing of piping materials, fittings and valves for this project.

This specification covers all pipe work pertaining to this project except the following:

Heating, ventilating, air and water pipe work serving non-process areas.

Instrument piping downstream of the last piping block valve, as normally defined on the approved P&ID's.

1.2 APPLICATION OF THIS DOCUMENT

The scope of this document is limited to piping, piping components & vessels fabrication of this project. This document shall not be used for any other purpose.

1.3 CONTRACTOR'S RESPONSIBILITIES

The Contractor shall be responsible for the complete design, manufacture, supply, inspection and testing, including full compliance with all applicable design codes and standards, including those listed in Section 2.0 of this specification.

1.4 SUB-CONTRACTORS

Approval shall be obtained from the Company before any work is subcontracted.

2. CODES AND STANDARDS

2.1 CODES, STANDARDS AND REGULATIONS

The production piping shall be designed, manufactured and tested in accordance with the requirements of this specification, and the latest edition of the following Codes, Standards and Statutory Regulations (where applicable):

1	API RP 14E	Recommended Practice for Design & Installation of Offshore Production Platform Piping.
2	ASME VIII Division 1	Pressure Vessels and Boiler Code.
3	ASME II Part A	Materials – Ferrous Materials Specifications.
4	ASME V	Non-Destructive Examination.
5	ASME IX	Welding and Brazing Qualifications.
6	ASME B1.20.1	Pipe Threads, General Purpose (Inch).
7	ASME B16.20	Metallic Gaskets for Pipe Flanges.
8	ASME B31.3	Chemical Plant and Petroleum Refinery Piping Code.
9	ASME B31.4	Oil Transportation Piping.
10	ASME B31.8	Gas Transmission and Distribution Piping.
11	ASME B16.25	Butt Weld Ends for Pipes, Valves, Flanges & Fittings.
12	ASTM A283	Carbon steel Plates.
13	ASTM A370	Standard Test Methods & Definitions for Mechanical Testing.
14	ASTM A435	Ultrasonic Examination of Steel Plates.
15	AWS	Welding Handbook.
16	NACE MR 01 75	Sulphide Stress Cracking Resistant Metallic Materials for Oil field Equipment.
17	ASTM E1002-11	Standard Practice for Leak using Ultrasonics

In addition to above refer the codes and standards specified in Cl.2 of Piping Design Criteria.

2.2 PROJECT SPECIFICATIONS

The piping specifications covered by this specification shall be designed, manufactured and tested in accordance with the requirements of these Project Specifications:

Spec. 2004-A	Piping Design
Spec. 2004-D	Piping specialties
Spec. 2005	Protective Coatings
Spec. 2006	Piping insulations
Spec.2009F	Welding & NDT

2.3 MANDATORY INDIAN STATUTORY REQUIREMENTS

This documents has been prepared to the International Standards detailed within. The EPC Contractor shall ensure that the Scope of Work is executed in accordance with all mandatory Indian Statutory requirements.

3. SCOPE OF WORK

3.1 GENERAL

The Contractor shall be responsible for supply of materials, fabrication, coating, installation testing and insulation of the pipe work, all sub-contractor coordination and guarantees as required and provision of certificates, quality control records and as-built drawings, notwithstanding any omissions from this specification.

This specification covers all pipe work on this project except Heating & ventilating areas and Instrument piping downstream of the last piping block valve, as defined on the approved P&IDs.

3.2 SCOPE OF SUPPLY

The Contractor shall provide and install the entire pipe work shown on the Project approved P&IDs outside package boundaries, including the necessary supports, connections, valves, a packaging and nozzle protection required.

The Contractor shall furnish all labour, materials and equipment necessary to perform the piping fabrication and installation.

The Contractor shall also supply the documentation required by this specification.

4. ENVIRONMENTAL DESIGN CRITERIA AND UTILITIES

4.1 BASIC CLIMATIC CONDITIONS

Refer clause no. 2 of piping design (Spec. no. 2004A)

4.2 SEISMIC AND TRANSPORTATION LOADS

Refer clause no. 2 of piping design (Spec. no. 2004A)

5. GENERAL REQUIREMENTS

5.1 GENERAL REQUIREMENT

Fabrication, installation and testing of pipe work shall conform to this Specification and ASME B31.3 and API RP 14E.

All equipment used, and materials used, are subject to inspection by the Company. The Company reserves the right to approve all material, tools and fabrication procedures, prior to Contractor's proceeding with the work.

5.2 WELDING REQUIREMENT

Welding shall be as per spec. 2009F.

5.3 DIMENSIONS

Dimensions shall be in mm and be related to the Platform datums or reference lines.

SI units shall be used, with the sole exception of pressure, for which kg/cm^2 shall be used.

5.4 DOCUMENTATION

The contractor shall comply all the bid specifications. The Contractor shall provide the Company with all fabrication drawings; weld procedures and fabrication procedures for approval. Shop work shall not start until the relevant drawings and weld procedures are received & approved by the Company. Weld procedures shall be accompanied by a weld procedure index and weld map for each line.
After construction, the Contractor shall supply project isometric drawings and P&ID's annotated to show as built information i.e. any change made to the pipe work design during fabrication and installation.

The Contractor shall be responsible for compiling and handing over all material certificates, welder qualification certificates, weld records, signed inspection & test plans, mechanical clearance report, installation check lists, charts of weld heat treatments, test and inspection records applicable to the competed work. The contractor shall furnish these certificates/reports & relevant documents for company's review & approval.

6. MATERIALS

6.1 GENERAL SPECIFICATION

Material shall comply with the Piping design criteria (Vol. II sec 3.3) and Project Specification for Piping Design, Spec. 2004 A.

6.2 MATERIAL IDENTIFICATION

For all pressure parts material certification shall be traceable to heat numbers. Certificates, including all material certificates, fully catalogued and NDT test records, mechanical test certificates, welding qualification certificates, heat treatment certificates and hydrostatic test certificates shall be available at final inspection and for counter signature by the certification authority and stored by the Contractor for a minimum of 5 years after acceptance of the pipe work by the Company. Pressure retaining parts shall be clearly marked to allow verification of traciability. Double blue stripes shall be marked for NACE material for clear identification & traceability.

The contractor shall provide one set the hard copies for approved drawings/ documents & materials for all pipes, fittings, valves, flanges, piping specialties & vessels documents to the piping engineer designated for the project in additions to the company's project requirement. The contractor shall submit the "ORIGINALS" on demand by company to verify the duplicate (Xerox) copies for test certificates review. On placement of order, the manufacturer/mill shall carry out all the production tests as indicated in relevant clauses of piping design criteria & project specification of piping design and submit reports to Company for review and approval. All test certificates & relevant documents shall be properly bound & submitted to company for review. Loose certificates & relevant documents submission is not considered acceptable. The test reports shall be submitted to Company before dispatch of material from the mill. The approved certificates from company shall be submitted to the piping engineer of company at fabrication site.

6.3 SUPPORT AND MISCELLANEOUS

Any material shall not be welded directly on process piping. If situation arises then prior approval of Company shall be sought during detail Engineering & shall note that the material welded directly to pressure retaining pipe work shall be of similar quality as the pipe work, including impact requirements, if any, for a length measured from the vessel wall of at least 150 mm. The material of such items beyond this point may be structural quality A283 Gr. C. or equal/superior (contractor to substantiate with sufficient information & documentary evidence).

6.4 BOLTING

Please refer to the Project Specification for Piping design criteria & project specification of piping Design (Spec. 2004- A).

6.5 GASKETS

Please refer to the Project Specification for Piping design criteria & project specification of piping Design (Spec. 2004- A).

7. FABRICATION

7.1 GENERAL

Piping shall be fabricated in accordance with the requirements of this Specification, with the piping codes and standards specified herein and under the individual material specification classes.

Piping design drawings and isometrics shall govern dimensions and materials.

The requirements of this specification shall apply to shop and field fabrication and to piping within packaged units.

Piping shall be prefabricated to the most practical extent to minimize offshore fabrication or installation.

Galvanized pipe shall not be bent or welded. Any such piping requiring bending, welding or threading shall be galvanized after fabrication.

7.2 FLANGING & BOLTING

Flange bolt-holes shall straddle the established horizontal and vertical centerlines of the pipe except where connecting to equipment dictates otherwise and any deviation shall be shown on the piping design drawings and/or isometrics.

Company approved lubricants such as colloidal molybdenum disulphide shall be applied to all flange bolts before the joints are assembled.

Flange bolts shall be tightened evenly and sequentially to impose equal pressure on the gasket and to avoid distortion or overstressing of equipment (As per Contractor's recommendations).

Bolts in gaseous hydrocarbon service and liquid service over ANSI 150# rating shall be torque-checked.

Flange make up shall be made with clean new gaskets. The used gasket sealing compounds or sealing agents is prohibited except for anti-stick release agent.

Prior to installation, stud bolts shall be smeared with API thread compound containing molybdenum disulphide, on that portion of the stud bolt, which will be in the holes of the flanges and under the nut. Bolts shall be progressively tightened to full bolt torque using sequence tightening as per the gasket manufacturer's recommendation.

7.3 THREADED & SOCKET WELD PIPING

Threads shall be concentric with outside of pipe, per ASME B 31.3, tapped and cleaned out.

The inside of each pipe spool shall be de-burred by Reaming.

Threaded connections shall be gauge checked or chased after welding or galvanizing.

When socket weld fittings are used, pipe shall be spaced approximately 1.5 mm away from the "bottom" of the socket.

Threaded joints, which are not to be seal welded shall be thoroughly cleaned, and the male threads coated with sealant.

Sealant shall be Company approved.

Seal welding is required as follows however while seal welding in threaded piping, maintenance aspect of equipment/component connected to threaded piping consequent upon seal welding shall be evaluated and if required, break out spool shall be provided:

1. All services where subject to vibrations (such as lines to/from reciprocating compressors, pumps etc.), Hydrocarbons or other flammables, all pyrophoric, toxic, lethal and glycol services.

2. Seal welding of threaded connections, when specified, shall include the first block valve, cover all threads and be done with electrodes not to exceed 3 mm in diameter.

3. Thermo wells shall not be seal welded.

4. Seal welded and threaded piping shall not be substituted for socket weld piping connections without prior written approval by the Company.

5. Immediately before erection of piping, all threads of the pipe and fittings shall be thoroughly cleaned of cuttings, dirt, oil and any other foreign matter. The male threads shall be coated with thread sealant and the piping made up sufficiently for the threads to full thread engagement.

6. Threaded connections shall be protected from oxidation during heat treatment and be gauge checked after welding or heat treatment.

7.4 BRAZED PIPING

Brazing temperatures shall be achieved as quickly as possible using a suitably sized torch.

The inside of brazed fittings and the outside of the associated tube shall be cleaned with sand paper. Flux paste is to be evenly spread over the joint.

7.5 PIPE SUPPORT

Piping shall be suitably supported to prevent sagging, mechanical stresses and vibrations, while allowing for thermal and structural movement. Piping shall generally be fastened to pipe racks with hot dip galvanized or cadmium plated U bolts and double nuts.

All pipes in hazardous service shall have 10 mm thick wear pads between the pipe and the support when the pipe would otherwise be resting directly on the support steel.

In locations where potentially severe vibration can occur, such as near control valves, pressure relief valves, pumps, compressors, and in high velocity streams, all small branch connections shall be braced by means of welded gussets or brackets in two (2) planes.

7.6 VALVES

Consideration shall be made for removal or withdrawal of valves or part of valves for maintenance.

7.7 GRE PIPING SYSTEMS

Refer Cl. 7.17 of Piping design (Spec. no. 2004A)

7.8 PENETRATIONS

Final location and dimensional checks of the pipe penetrations are the responsibility of the Contractor.

Deck or skid penetrations shall provide a minimum of 25 mm radial clearances around the piping.

All open deck drain cups shall be properly covered with suitable hinged caps in order to restrict the blockage due debris and unwanted mud / dirt.

7.9 PIPING AT EQUIPMENT

Piping at equipment shall be arranged so the equipment can be removed without the need to dismantle the equipment, adjacent equipment or piping.

Equipment will not be used to anchor piping. Forces transmitted to equipment at tie-in points will be within the recommended limits.

Piping connected to rotating equipment shall be supported to minimize the transmission of vibrations from the machines.

Piping connections to exchangers shall be properly aligned to allow for hot & cold service and to limit the stress on exchanger nozzles to be within allowable levels.

Piping at pumps shall be supported so that equipment can be dismantled or removed with a minimum number of temporary supports and without dismantling valves and piping other than the spool that connects to the pump. Clearances shall permit installation of blind flanges against block valves when the service is hazardous and the removal of the pump impeller without removing the pump. Where reducers are required on suction lines, they shall be eccentric and installed flat side up.

Valves shall be located as close as possible to the pump nozzles as practical. Isolation valves on pump suction lines shall be full-bore ball type. Isolation valves on discharge lines shall be located downstream of check valves.

Pump suction lines in which vapors may be present shall be inclined with sufficient slopes.

Fuel gas piping within the turbine enclosure shall be subject to strict control with respect to the number and type of flanged joints, fully welded being preferred.

All piping connected to diesel engines shall be arranged in such a manner that adequate flexibility is maintained so as to effectively isolate the piping from any engine vibration. Piping shall not be routed directly over diesel engines. Fuel lines shall not be run over exhaust piping or any location where leaks would cause fuel to impinge on to hot surfaces.

7.10 PIPING AT INSTRUMENTS

Thermometer and thermocouple well connections, as well as vents and drains, shall be tapped after welding or stress relieving operations, using a plug tap. Verification gauges shall be used to prove the suitability of the threads and adequacy of instrument fitting-clearance.

8. TOLERANCES

Dimensional tolerances at Annex. -1 shall apply to in-line items and connections or branches for other lines.

Flange alignment for piping connected to rotating machinery must not cause machine-to-driver misalignment to exceed the equipment manufacturer's tolerances.

Tolerances may be exceeded to a maximum of 15 mm for items such as vents, drains, dummy support lengths, field supports and temperature and pressure connections where the deviation does not affect another line.

Material, which has been locally stress-relieved, shall be rechecked for tolerances in accordance with the drawings. Small residual deviations remaining after heat treatment may only be corrected by cold straightening. Hot straightening after heat treatment, expect for non-pressure attachments, will not be approved.

9. TESTING REQUIREMENTS

9.1 PNEUMATIC TESTING

Pneumatic checks of branch reinforcing pads shall be made on completion of the pipe spool and before hydrostatic testing. The air pressure used for this check shall not be greater than 1.75 kg/cm^2 nor less than 0.70 kg/cm^2. Pressure shall be increased gradually and soap leak tests carried out on the outside welds of the pads, the inside welds between pads and pipes, as well as inside the branch pipes. Testing shall be witnessed by a Company representative.

9.2 HYDROSTATIC TESTING

Piping shall be hydrostatically pressure tested in accordance with ASME B 31.3 and this Specification where called for on the piping design isometric drawings. Workshop hydrostatic testing is not required the pipe is to be field-tested. Pressure test shall be performed to ASME B31.3.

9.3 PREPARATION FOR TESTING

The Contractor shall be responsible for properly preparing facilities for pressure testing.

The Contractor shall review the drawings and piping to ensure that adequate temporary supports, vents, drains, and blinds (as necessary to allow testing) are provided to test the facility in accordance with this specification. The Contractor shall report to the Company the findings from this review.

The Contractor shall provide all high points in the piping with vents and all low points with drains, regardless of whether or not they are specifically shown on the drawings.

The Contractor shall prepare, for the purpose of the pressure tests, a procedure and schedule for testing all process and utility piping within the limits of their responsibilities. The procedure and schedule shall be presented to the Company for approval at least sixty (60) days prior to the scheduled start of pressure tests. Such procedures shall include, but are not limited to, details of the following:

1. Mark-ups of piping and instrument diagrams (P&IDs) showing the limits of piping and equipment to be included in each test.

2. Test media to be used.

3. Location of all isolation blinds, high point vents, low point drawings, and temporary piping supports.

4. Procedures for flushing lines including fill points and equipment to be removed for flushing.

5. Procedures for filling lines including addition of oxygen scavenger and bactericide in proper quantities.

6. Procedures for pressurization of the system, including the location of the injection points and specified test pressures.

7. The forms, which shall be used to record hydrostatic test data. In this form calibration details of gauges, chart, etc., shall be indicated.

The testing operations shall be conducted diligently, thoroughly, and in a safe workman-like manner in accordance with accepted piping testing practices & codes.

The Contractor shall correct any work by the Contractor, or existing conditions, which in the opinion of the Company are deemed to be unacceptable. The testing operations may not continue until the unsafe conditions have been corrected to the

satisfaction of the Company. The Contractor shall not receive additional compensation for time lost due to unacceptable conditions.

If testing is subcontracted, the Contractor shall provide an experienced supervisor who will be responsible for supervising testing operations.

The Company, or the Company's Representative, will witness and approve all tests.

9.3.1 MATERIALS AND EQUIPMENT

The Contractor shall furnish all materials and equipment necessary to pressure test all piping. This includes, but is not limited to, pumps, compressors, valves, calibrated pressure gauges, thermometers and chart recorders, filters, plugs, blinds, caps, strainers, flanges, bolts, gasket, all piping incidental to the filling, flushing, transferring and disposing of the test medium, bactericides, oxygen scavengers, dyes (if required), and the test medium.

Prior to hydrotest, calibration certificates for pressure gauges, thermometer, chart recorder, etc., shall be submitted to the company for review. Further, these instruments shall be recalibrated in the presence of company during which calibration certificates for recalibration instruments like dead weight indicator, master gauges shall be submitted to the company for review.

The Contractor shall provide a suitable pressure-relieving device between the pressuring pump discharge nozzle and the fill point, calibrated to prevent excess pressure in any of the piping and equipment being tested.

9.3.2 PRE-TEST FLUSHING

Prior to commencing any flushing, the Contractor shall verify that all required non-destructive testing (NDT) such as radiography, ultrasonic, etc, has been completed.

The Contractor shall also verify that all required post-weld heat-treating has been completed.

Upon verification of the above requirements, Company's Representative shall authorize in writing the Contractor to proceed with flushing.

All completed piping systems shall be flushed prior to testing.

All lines DN50 (2") and larger, other than instrument and utility air, shall be flushed with potable water so as to completely clean them of any loose mill scale, rust, or various extraneous materials.

All lines smaller than DN50, and air lines of any size, shall be cleaned out in like manner using compressed air.

The flushing shall be done at a high a velocity as practical (minimum of 1.5 m/sec.) in order to flush out any loose material in the line.

Flanges shall be opened and spool pieces shall be removed as necessary to flush the piping thoroughly.

Flushing shall be performed until a clear stream of flushing medium exits the piping, with minimum flush volume being equal to five (5) times the volume of the piping being flushed.

In case flushing as required above is not practical, contractor shall submit alternate proposal to company for approval along with justification for not adopting procedure as mentioned above. Alternate proposal for flushing submitted by contractor must completely clean any loose mill scale, rust, or various extraneous materials inside piping system.

All flushing shall be done in the presence of the Company's Representative.

Orifice plates, thermo wells, flow straightening vanes, positive displacement (PD) and turbine meters and other vulnerable equipment, if already installed, shall be removed prior to flushing.

All instrument leads shall be disconnected prior to flushing and shall remain disconnected during pressure test.

All control valves shall be removed.

Spring type supports shall have stops installed to prevent overloading of the support. All vessels included within a piping system being flushed are to be filled and drained through the vessel drain system.

All check valve flappers shall be removed in the presence of the Company's Representative and attached to the outer body of the valve for the flushing. The flappers shall be reinstated after the flushing in the presence of the Company's Representative.

9.3.3 PIPING ACCESSORIES & EQUIPMENT EXCLUDED FROM HYDROSTATIC TESTING

The following piping accessories and equipment shall be excluded or isolated from hydrostatic testing of piping:

1. Rotating machinery, pumps, compressors, etc.
2. Strainers and filters.
3. Pressure-relieving devices such as pressure relief valves and rupture disc.
4. All instruments, including level controllers and gauge glasses.
5. Pressure gauges.
6. Expansion joints.
7. Flow nozzles.
8. Control valves.
9. Corrosion probes.
10. Orifice plates, thermo wells, flow straightening vanes and instrumentation such as positive displacement (PD) and turbine meters, corrosion probes, displacement-type level instruments, carioles flow meters.
11. Any other piping such as open drain lines, atmospheric vents, etc., or equipment designated by the Company.

9.3.4 TEST FLUID

Except as otherwise specified, all piping shall be hydrostatically tested with water. The hydro test water shall be clean and free from suspended matter. The hydro test water may be analyzed by the Company to determine its suitability for use in the testing operations.

The hydro test water temperature shall be within 7°C - 25°C.
Suspended matter in the hydro test water shall be removed before injection into the piping by a filter capable of removing 99% of all particles 92 microns in diameter and larger, or equivalent to using a 100 x 100 wire-mesh screen.

If foreign material is pumped into the piping, the Contractor shall again flush the line with clean water.

Only potable water shall be used in piping systems containing stainless steel components. No seawater can be used in these line tests. The lines shall be drained immediately after tests.

When air is specified as the testing medium, the air shall have a maximum dew point of -7°C.

Water used for hydrostatic testing shall be clean and contain corrosion inhibitors in the concentrations recommended by the Manufacturers. The Contractor is required to verify with the chemical contractor, current requirements regarding proper disposal procedures for the chemically inhibited test water.

Potable water used to hydrostatically test piping or vessels fabricated from, or containing parts of austenitic stainless steel, ferritic stainless or high nickel alloy, shall be free from undissolved solids and have less than 200-ppm chlorides. The system shall be flushed after testing.

Instrument airlines and utility airlines shall be tested with compressed air of instrument quality.

Testing of vessels or other equipment with air shall not be allowed except by written Company approval.

9.3.5 HYDROSTATIC PRESSURE TEST

The Contractor shall hydrostatically test piping, vessels and equipment for which he has fabrication or installation responsibility. Hydrostatic pressure testing of piping and piping systems shall be in accordance with ASME B31.3.

Piping and vessel test pressures and the Hydro test schedules shall be provided by the Contractor in accordance with this Specification.

Upon verification of the pre-flushing requirements, the Company's Representative shall authorize the Contractor to proceed with pressure testing.

Hydrostatic testing may be performed for completed systems or for individual components of the system, as approved by the Company.
The lines shall be drained immediately after tests.

Vents shall be open during test water filling so that air is vented prior to applying pressure to the system. Vents shall then be closed to permit pressurization.

Hydrostatic testing shall not be done against closed valves. Where it is impractical to hydrostatically test through a valve, that the valve shall be isolated by blinds or disconnected from the piping system.

The hydrostatic test pressure for each section tested shall be contained by suitably placed spectacle blinds, spades, skillets, blank insert chokes, blind flanges or other means of positive closure. The Contractor's test procedures shall indicate the thickness of blinds to be used for isolation during hydrostatic tests.

Hydrostatic test pressure connections shall be on the upstream side of check valves.

Thermo wells shall be included in hydrostatic tests.

All hydrostatic pressure tests will be recorded on a two-pen recorder (24-hour chart type) with a range suitable for recording the test pressure. The second pen shall be used to record the ambient temperature.

Hydrostatic test pressure shall be achieved and relieved gradually so as to allow sufficient time for pressure equalization throughout system under test.

Hydrostatic test pressure shall be maintained for a minimum of two hours duration.

Hydrostatic test pressure readings shall be taken from the test gauge at fifteen (15) minute intervals during the test, and recorded on form provided by the Contractor.

During hydrostatic pressure test, the test medium may be subjected to thermal expansion.

The Contractor shall take proper precautions to avoid excessive pressure caused by thermal expansion.
The Company's inspectors will begin a visual examination of each joint after the hydrostatic test pressure has been maintained for thirty (30) minutes.

After completion of hydrostatic test, the pressure shall be reduced to the design pressure and all valves including check valves in the section of the line shall be tested by being closed for ten (10) minutes with pressure contained by specific valve at one end to determine whether each valve is in turn positively shutting off and holding pressure.
Hydrostatic test pressure shall be removed only with the permission of the Company's representative.
All joints, including welds, are to be left un-insulated and exposed (joints may be primed prior to hydrostatic test) during the hydrostatic test.

Only hydrostatic tests with ending pressures equal to or above starting pressure will be accepted.

The Contractor shall schedule hydrostatic tests for that portion of the day when thermal contraction will not result in ending pressures lower than starting pressure.

Hydrostatic pressure tests on each major section of piping shall be carried out with all pressure relief valves removed and their respective nozzles or connections blinded off or plugged.

Upon completion of piping or vessel hydrostatic tests, pressure relief valves shall be reinstalled in each system.

Drain, instrument, relief, and blow-down lines are to be air and soap bubble tested at 1.76 kg/cm^2 unless otherwise noted.

9.3.6 AFTER-TEST FLUSHING, DRAINING, DRYING & REINSTATEMENT

Piping and equipment fabricated from or containing parts of austenitic or ferritic stainless steels, or high nickel alloy shall, immediately after hydrostatic test completion, be drained and then flushed with distilled or demineralised water.

Piping and equipment that are not fabricated from or do not contain parts of austenitic steel, ferritic stainless steel, or high nickel alloy may be hydrostatically tested with inhibited sea water, per this specification, provided the system is, immediately after testing, drained of all seawater and then flushed with potable water.

Potable water so used for flushing shall be subject to analysis and approval by the Company and shall be treated per this specification.

All after-test flushing shall be performed so that all pipe surfaces previously wetted during the pressure test are flushed.

All piping shall be thoroughly dried.

The piping, equipment and instrumentation shall be reinstated.

9.3.7 HYDROSTATIC TEST RECORDS

The Contractor shall provide all hydrostatic test recording instruments with all necessary supplies, and shall maintain accurate and permanent records. The hydrostatic testing and pressure recording equipment shall be subject to the written approval of the Company.

All hydrostatic pressure test records, data, and charts shall be clearly marked with the following information and furnished to the Company:

1. The Company name and authorized representative.
2. The hydrostatic testing Contractor's name and authorized representative.
3. Line identification of piping and/or equipment tested.
4. Date, start time, and stop time of hydrostatic test.
5. Hydrostatic test pressure and duration.
6. Hydrostatic test medium used.
7. Post-test flushing medium used and its source.
8. Ambient air temperature.
9. The recorder element range.
10. Explanation of any hydrostatic pressure discontinuities that may appear on the chart.
11. Listing of items excluded from the hydrostatics test.
12. Marked up P&IDs depicting valves, which passed and failed their respective service test.
13. Signature of the Company's and the testing Contractor's authorized representative.

9.3.8 RE-TESTING

Should piping failure occur during hydrostatic testing, the Contractor shall locate the failure, for repair purposes.

The Contractor shall, at their expense, repair all defects resulting from inferior workmanship or defective materials furnished by the Contractor.

After repairs have been made and after the items have been removed, the Contractor shall perform a new hydrostatic test until a successful test result is obtained to the satisfaction of the Company's Representative.
The Contractor shall then clean and dry the piping including the reinstatement of the items and produce the records.

9.3.9 COMPLETION OF HYDROSTATIC PRESSURE TESTS

Upon completion of all hydrostatic tests, the Contractor or Sub-Contractor shall:

Dispose of all hydrostatic test medium to a location designated by the Company, exercising proper caution to avoid accidental creation of a vacuum during draining of water from equipment and piping.

Restore any equipment excluded from hydrostatic tests to a fully operational condition.

Remove all temporary facilities installed by the Contractor, including temporary supports and bracing.

Remove and temporary plugs or blinds.

Replace any used gaskets or damaged nuts and bolts.

Air purges all piping and equipment, unless specifically deleted by the Company in writing, to remove low-point pockets of water. This air purging shall be preformed in the presence of the Company's Representative and last a minimum of thirty (30) minutes.

Re-torque all flange bolts on flanges in hydrocarbon service with bolts 25 mm (1") or larger and all flanges in gas services over ANSI-150# which were remade after hydrostatic testing. These must be re-torque to their stated torque valves in the presence of a Company Inspector.

9.3.10 FINAL PIPING SYSTEM LEAK TEST

The Piping System Leak Test is the final pressure test, used to prove the integrity of the installed flanged and threaded joints and connections of piping and equipment systems. It shall be designed to demonstrate that the process and utility piping systems are properly prepared to operate at their specified design pressure.

The leak test shall be performed after the final accepted hydrostatic tests, upon completion of final assembly and prior to startup.

The Contractor shall submit a detailed written procedure describing the complete piping system leak test for Company approval. The piping systems shall each be pressurized to 1 kg/cm^2. The test may be carried out using either the bubble or acoustic emission methods like Ultrasonics as per ASTM E1002 -11 or preferably combination of both. Piping system leak testing shall be done only to the approved procedure and with the Company monitoring personnel present.

The piping system leak test shall be performed on all completed systems, including equipment that may have been previously tested by the Contractor or Contractors.

All valves, control valves, filters, strainers, turbine meters, PD meters, flow nozzles, level gauges, level switches, level controls, rupture disks, pressure relief valves, and pressure gauges shall be included in the piping system leak test. Some instruments or equipment may be excluded from the piping system leak test at the Company's discretion.

The inert atmosphere remaining following the piping system leak testing is intended to eliminate the need for further pre-startup inerting of piping equipment.

10. IDENTIFICATION & RELEASE FOR DELIVERY

Piece marking of prefabricated piping for identification during installation shall be the responsibility of the Contractor.

Piece marks shall bear the line number with a suffix painted or tagged on each piece.

After inspection, testing of piping and application of protective coating, identification numbers shall be stenciled in several places along with length of the spool.

Marking paint or ink containing harmful metal salts such as zinc, lead or copper shall NOT be used to mark alloy, stress relieved or Charpy test materials.

Stamping of identification on pipe or flanges is not permitted.

11. INSTALLATION

Piping shall be installed in accordance with the piping drawings.

Piping installation includes the supply and installation of supports shown in the drawings and piping schedules together with those supports necessary to adequately and properly secure the piping.
All lines shall be installed true and plumb except where specifically noted on the drawings.

Installation of piping shall be scheduled so that no undue strain will be inflicted on equipment due to lack of support, dead weight or misalignment.

Piping shall be made, broken, and re-made at all rotating equipment connecting points, with alignment checks made with and without pipe in order to prove piping does not affect alignment.

Flange bolts shall be tightened evenly and sequentially to avoid distortion or overstressing of equipment.

If any piping does not meet alignment checks, the Contractor shall cut and refit that pipe.

In special cases, when approved by the Company, heating and stress relieving of the pipe may be allowed to make final fit-up.

No heating or bending may be done except by the using Company approved procedures.

Pipe shall be installed beginning at the equipment connection then moving away as the piping is assembled.

Where required, field welds shall be used when installing pipe to equipment.

Field modification of prefabricated piping shall be performed in strict accordance with this specification and the applicable codes, standard or recommended practice.

All weld burrs and all foreign matter shall be removed from the piping prior to closure.

Field fabricated carbon steel seal oil and lube oil piping shall be “pickled” in accordance with this specification.

Construction supports required during installation shall be provided by the Contractor and shall be clearly marked by the Contractor for removal before commissioning.

At all times when piping fabrication or installation is not in progress and at other times when openings in pipe work are not required to be left exposed, they shall be protected against entry of foreign matter by reinstalling shipping protector caps and covers or other suitable means.

Tack welded fit-ups lacking a completed root pass at the cessation of a work period shall be covered at the seam with polyethylene tape.

Before installing pre-fabricated piping, the inside of the pipe shall be inspected by the Contractor to ensure that all foreign matter has been removed.

Austenitic stainless steel pipe and fittings and all valves and special items shall be stored out of contact with the ground. Valves and special items shall also be covered to prevent entry of moisture or foreign matter.

The Contractor shall take all possible care to avoid contamination of stainless steel materials. Stainless steel materials shall be lifted with nylon or other approved slings, which are free from dirt or ferritic particles. Under no circumstances shall chains or wire ropes be used.

Shoes and cradles shall preferably be located and attached to the pipe work after the line has been installed. They may be attached to pipes prior to installation provided that when the pipe is installed the shoes and cradles are central over the pipe supports.

To prevent damage to valve seal and seat surfaces, valves, when installed, shall be, and shall be left in, the following open/close positions:

Ball and plug valves - fully open

Globe and gate valves - fully closed.

Piping shall not be connected to a valve of any description unless the joints can be made without inducing stress in either the valve or the pipe work.

Temporary strainers, slip-plates, blind flanges and the like shall be properly installed in the location manner and orientation shown in the drawings.

12. CLEANING

After installation, each pipeline shall be thoroughly cleaned to remove all moisture and loose scale, sand, paint and any other foreign matter.
Special cleaning procedures may be required for specific services. Particular care shall be taken to ensure that lines downstream of the dehydration system are thoroughly internally dried.

After fabrication and cleaning, assembly ends shall be protected for handling and shipment.

If the pipe is not immediately installed and is to be stored or barged to the platforms, all ends and opening shall be sealed in a suitable and approved method so as to prevent the entrance of moisture, dirt or other foreign matter.
The Contractor shall furnish all materials for field flushing, cleaning or protection during shipment and handling.

13. PROTECTIVE COATING

Painting, protective coatings and the procedures used for the preparation of surfaces shall be specified in the Project Specification for Protective Coatings (Spec. 2005).

Piping shall be insulated where indicated on drawings. The piping to be insulated shall be grit blasted and given one coat of primer only then insulation applied per the Project Specification (Spec. 2006), Insulation of Piping & Equipment.

During fabrication, sandblasting, painting and installation, care shall be exercised to keep blast grit, dirt and other debris out of piping systems, instruments, and equipment. The interior of piping systems shall be thoroughly cleaned by the Contractor prior to assembly and after blasting/coating is completed.

Flanges shall be painted on the flange edges, inside bolt holes, and up to the gasket surface.

Corrosion inhibited grease with wraps shall be provided to exposed spectacle blind sealing surfaces.

The Contractor shall be responsible for painting and/or insulation will also be responsible for cleanup after their respective work is completed. The Company will inspect/examine all such work and then provide a written acceptance prior to release of Contractor.

14. SHIPPING & HANDLING

Protection for pipe, fitting and valve openings shall be applied after inspection as follows:

Flange faces (gasket contact surfaces) shall be adequately protected by coating with a removable rust preventive and attaching a bolted or steel strapped 20 mm thick wooden or metal blank. Unpainted steel blanks shall not be used where rust would discolors the coated surface of skid-assembled components. Gasket contact surfaces shall not be painted. If the surface is painted, it shall be restored to its original specification condition before application of protection.

Threaded connections shall be closed with a steel pipe plug.
Beveled ends shall be closed with metal or a plastic covers.

Each spool piece shall be clearly marked on both ends with the line number. Marking shall withstand exposure during shipping.

Extra protection from impact shall be provided for Cu-Ni / GRE pipe.

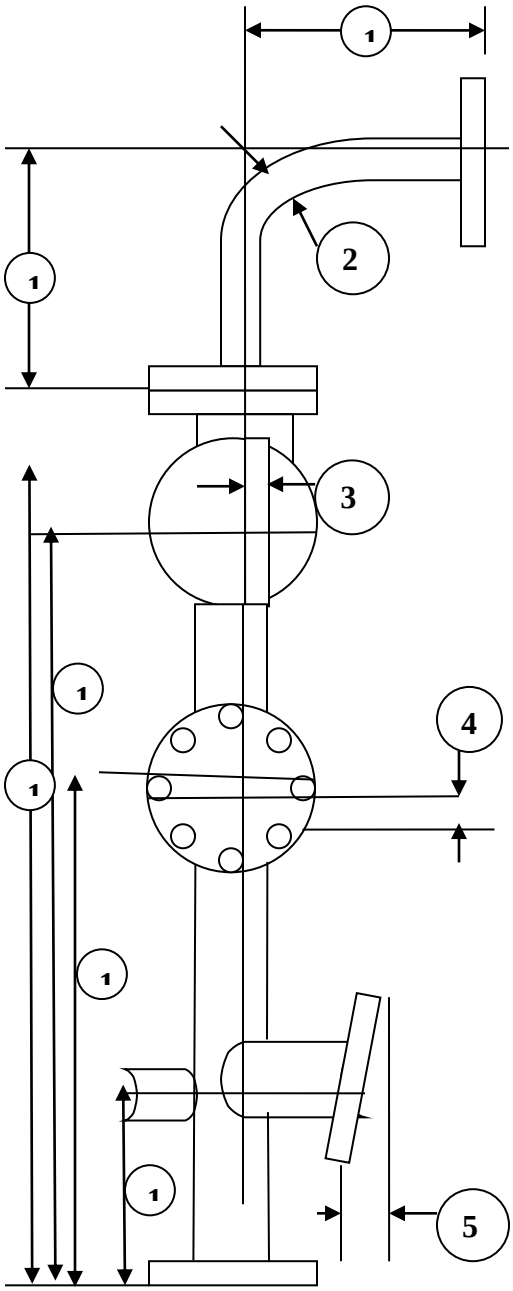

ANNEXURE - 1

1. +/- 3mm MAX. FROM INDICATED DIMENSIONS FOR FACE TO FACE, CENTER TO FACE LOCATION OF ATTACHMENTS ETC.
2. 10% MAX. FOR INTERNAL PRESSUER 3% MAX FOR EXTERNAL PRESSURE FLATTENING MEASURED AS DIFFERENCE BETWEEN THE MAXIMUM AND MINIMUM O.D. AT ANY CROSS SECTION.
3. +/- 3mm MAX. LATERAL TRANSLATION OF BRANCHES OR CONNECTIONS.
4. +/- 1.5 mm MAX. ROTATION OF FLANGES FROM THE INDICATED POSITION, MEASURED AS SHOWN.
5. 0.5mm MAX. OUT OF ALIGNMENT OF FLANGES FROM THE INDICATED POSITION MEASURED ACROSS ANY DIAMETER.

FUNCTIONAL SPECIFICATION

FOR

PIPING SPECIALTIES

Prepared / Revised By	Reviewed By	Approved By	Total No. of Pages	Date	Rev. No.
MS	AKM	DRK	26	14.08.18	8

Scanned with CamScanner

REVISION STATUS RECORD

PS	AKM	SJ	26	09/05/2016	7
PS	SJ	AR	25	04/04/2014	6
PS	GJ	PKM	23	10/09/2012	5
PS	GJ	GRP	25	08/07/2008	4
PS	GJ	JSS	25	07/12/2006	3
PS	MP	JSS	24	13/01/2005	2
MP	MG	PKM	21	18.08.2003	1
PREPARED / REVISED BY	REVIEWED BY	APPROVED BY	TOTAL No. OF PAGES	DATE	REV. No.

CONTENTS

1.0 **INTRODUCTION**
1.1 General
1.2 Contractor's Responsibilities

2.0 **PROJECT SPECIFICATIONS**

3.0 **ENVIRONMENTAL DESIGN CRITERIA AND UTILITIES**
3.1 Seismic and Transportation Loads
3.2 Design Life

4.0 **GENERAL REQUIREMENTS**
4.1 Company's Requirements
4.2 Dimensions

*5.0 **DESIGN REQUIREMENTS**
5.1 General
5.2 Design Load Cases
5.3 Design Stress
5.4 Drawings and Calculations

6.0 **MATERIALS**
6.1 General Specification
6.2 Material Identification
6.3 Sour Services
6.4 Certification Documents

7.0 **SPECIALTY ITEMS**
7.1 Strainers
7.2 Scrapper tees
7.3 Shutdown valves
7.4 Utility hose reel
7.5 5D bends
7.6 CP/BP/SP & Retrieval tool kit
7.7 Pig detector
7.8 Hinged closure
7.9 Choke valves
7.10 Spray nozzles

7.11 Fire & foam hose reel
7.12 Continuous drainer
7.13 Chemical utility, hoses & hose connections
7.14 Flame Arrestor
7.15 Hand control valve
7.16 Double Block & Bleed Valve
7.17 HIPPS Valve
7.18 Sample Bomb

8.0 SPARES

9.0 WARRANTY

1.0 INTRODUCTION

1.1 GENERAL

This refers to the minimum and mandatory requirements of designs & materials for piping specialties & components as per approved P& ID , approved Data-Sheet and Bid-Package. All piping assemblies, specialties & materials supplied or installed under these specifications shall be in accordance with sound engineering principles. Any omission from this specification shall not relieve the contractor from his responsibility of furnishing equipment's or materials to meet the specific process parameters, environmental parameters, safety parameters and any other applicable statutory laws or relevant codes & standards. Substitution or changes from this specification must be accompanied with sufficient information/justification and written approval shall be obtained from the Company.

All welding and NDT shall be performed as per Spec. 2009 F.

1.2 CONTRACTOR'S RESPONSIBILITIES

The Contractor shall be responsible for the selection and design of piping specialties, including full compliance with all applicable project specifications and design Codes / Standards, including those listed in Section 2.0 of this Specification.

2.0 PROJECT SPECIFICATIONS

2.1 The piping specialties covered by this Specification shall be designed, manufactured and tested in accordance with the requirements of Piping Design Criteria and the following Project Specifications:

1. Piping Design (spec. 2004-A)
2. Piping fabrication (spec. 2004-B)
3. Protective Coatings (spec. 2005)
4. Insulation of piping and equipment (spec. 2006)

2.2 The Contractor shall be responsible for the design, engineering, supply of materials, fabrication, coating, installation and testing of the pipe work, supply of drawings and data, all sub-contractor co-ordination and guarantees as required, notwithstanding any omissions from this Specification.

3.0 ENVIRONMENTAL DESIGN CRITERIA AND UTILITIES

3.1 SEISMIC AND TRANSPORTATION LOADS

Refer relevant clause of piping design (Spec. no. 2004A)

3.2 DESIGN LIFE

The process facilities design life requirement is 25 years.

4.0 GENERAL REQUIREMENTS

4.1 COMPANY'S REQUIREMENTS

The contractor shall prepare detailed datasheet for each specialty item based on this bid package and approved P&ID and submit to the company for approval.

The Datasheet shall contain the following data, but not limited to:

Design Pressure and design temperature.
Material of construction.
Rating.
Governing Codes and Standards and Specification.
Relevant technical notes.
Tag no.
Size.
Reference to approved P&ID.
Relevant calculations.
Relevant drawings.

4.2 DIMENSIONS

SI units shall be used. Dimensions shall be in mm and be related to the Platform datum's or reference lines.

5.0 DESIGN REQUIREMENTS

5.1 GENERAL

Materials shall conform to this Specification with the attached piping specification index and the identified API, ASME, ASTM, BS and NACE codes and Standards.

Refer piping design criteria (Vol II sec 3.3) & piping design (spec 2004-A).

Pressure and temperature ratings of ASME B16.5 shall apply for the design conditions.

Requests for substitutions of any kind shall be complete with all pertinent engineering information required for the Company's evaluation of the proposed substitution.

5.2 DESIGN LOAD CASES

Specialties, its supports and anchors, shall be designed to withstand the results of the following applicable combinations of loads and forces within the limits of stress set by ASME B31.3:

1. Hydro-test Condition (The empty weight plus weight of water to fill the piping).

2. Operating and Design Conditions (The empty weight plus the weight of operating fluid).

3. Wind loading condition

4. Dynamic Loading Condition

5. Periodic Site Test Condition

6. Any other condition that would affect the safety of the pipe work, e.g. cyclic loading and slug forces, when identified on the Data Sheet.

5.3 DESIGN STRESS

Allowable stress shall be the maximum stresses permitted by ASME B31.3

5.4 DRAWINGS AND CALCULATIONS

Vendor drawings shall contain all pertinent information relating to the Codes, Standards and Specifications used in the design, fabrication, inspection and testing of all the specialties, the pipe work, including the materials used.

The Contractor shall submit detailed calculations establishing the compliance of their design with the requirements of ASME B31.3.

Contractor to prepare the data sheets for each specialty & shall provide the information such as item description, pipe size, thickness, valve selection & tag Nos, designed pressure- temperature ratings, hydrostatic pressure, list of spares and applicable codes/standards. Contractor to submit the data sheets and all other information required for design of each specialty for company's review & approval.

Contractor to prepare the specifications, data sheets based on the functional parameters, relevant piping class as per approved P&ID & material of construction and submit to company for review & approval.

All calculations shall be complete, giving all references and showing all working methods. The Contractor shall be able to provide proof of software verification for any software used. Computer printouts will not be accepted without the program flow chart, input data and complete printout, and then only by prior written agreement with the Company at the quotation stage.

Where relevant, additional calculations shall be undertaken regarding the effects of slug forces.

The pipe work shall be analyzed in its corroded state for each load combination.

Approval of drawings, calculations and other documents by the Company does not relieve the Contractor of their responsibility for the correctness of the design to suit the stated conditions.

6.0 MATERIALS

6.1 GENERAL

Materials shall be as per ASTM, BS or API specifications referenced in the project piping specifications (SPEC 2004- A & B) and piping design criteria.

6.2 MATERIAL IDENTIFICATION

All piping specialties except those with threaded connections, shall be supplied with mill certified test reports and certificates to identify the type of steel, composition, heat number and any special testing.

The Contractor shall furnish to the Company Inspector (OD- Rep) with one (1) copy of all mill certificates for all the materials purchased by the Contractor duly certified by company approved third party inspection agency.

6.3 SOUR SERVICE

All sour service materials shall conform to piping design criteria and Spec 2004A.

6.4 CERTIFICATION DOCUMENTS

All pressure parts material certification shall be traceable to heat numbers. Certificates, including all material certificates, mechanical test certificates, welding qualification certificates, heat treatment certificates and hydrostatic test certificates shall be available at final inspection and for counter signature by the certification authority and stored by the Contractor for a minimum of 5 years after acceptance of the piping by the Company. Pressure retaining parts shall be clearly marked to allow verification of tractability.

7.0 SPECIALTY ITEMS

Specialty items shall be supplied with a stainless steel tag. Specialty Items shall be supplied, designed, tested & installed as specified in the Project Specification for specialty items. This specialties refers to items like Strainers, Scrapper Tees, Hinged Closures, Pig Detector, CP/BP/SP, 5D radius Bends, SDV, HCV, Choke Valves, Strainers, Spray Nozzle, Fire water & foam hose reel, Chemical and Utility hose reel, Continuous drainer etc. used in the Offshore Platforms. The materials of construction, piping class, governing codes and standards, quality assurance shall be followed as per relevant clauses of this specification. All specialties shall be hydro tested as per respective piping class and 1.5 times the design pressure. All pressure welds shall be 100% radio graphed. All piping specialties shall be painted in accordance with Spec. 2005. However, piping speciality supplied by the vendor with primer as per Spec. 2005 followed by subsequent coating (With touch up primer coating wherever required as per Spec. 2005) by main contractor is also acceptable.

7.1 STRAINERS

All basket type strainers shall be designed as per ASME Section – VIII. Div. 1 and others as per ASME B 31.3,

MOC of the body, nozzle etc shall be same as that of the connected piping.

Screen material shall be as follows:

Body Material		Screen Material
C.S	-	S 316
C.S. (NACE)	-	SS 316 (NACE)
Other than C.S.	-	Compatible with Piping Class.

Mesh size for all strainers shall be 40, unless otherwise specified.

Drains with ball valve and blind shall be provided.

Installation of strainer shall conform cleaning without dismantling strainer housing and associated piping & instrumentation.

Break out spools shall be installed wherever the temporary strainers are recommended in P&ID.

7.2 SCRAPPER TEES

Scrapper tee (or sphere tee or flow tee as it is called) essentially consists of concentric barrel tees. The purpose of the scrapper tee is not to allow passage of pig sphere/scrapper on to the branch side.

The scrapper tee shall be suitable for pigging operation with process hydrocarbon/raw sea water. The scrapper tee inside diameter shall be same as that of inside diameter of riser in splash zone to maintain constant ID to permit smooth pigging operations.

No bars shall be used.

Maximum possible opening shall be provided through slots to limit the pressure drop i.e. total opening shall be 1.0 to 1.5 times the branch pipe area.

Thickness of run/branch is to be calculated by Vendor to the required design pressure and temperature and it shall match with the corresponding matching pipeline for free passage of pig as per DNV rules for submarine pipeline.

7.3 SHUT DOWN VALVES (XSDV)

1. SHUT DOWN VALVES (XSDV):

Type : Flanged Ball valve with manual override

Size : Contractor to prepare data sheet based on process parameter.

Others: Valves rating; flange facing; body, ball, seat and trim material, packing etc. shall be to the relevant piping specs. All XSDV shall have flanged ends irrespective of line sizes and class rating.

Shutdown time : Contractor to specify.

All hydrocarbon valves are to be supplied as per approved P&ID's to meet NACE-MR-01-75 (latest edition) and Piping Design Criteria.

2. ACTUATOR:

Type Pneumatic piston, spring return, Quarter turn operation

Size. Actuator torque shall be 1.25 times the valve torque required at full rated differential pressure of valve, (Vendor shall indicate actuator model no, valve torque and actuator torque in a tabular form along with the quotation.

Supply Pressure Instrument air/gas at 7 kg/cm2g (10.6 kg/cm2 g max) (min. pressure being 5.5 kg/cm2g)

Pneumatic 3/8" NPT (female) Tubing shall be SS 316 3/8" OD x 0.049" WT

Accessories Filter regulator with gauge.

3. VALVE POSITION SWITCH (XVPS):

Valve positions switches to indicate open/close position for remote operation.

Type Sealed Micro type, lever operated

Rating 24V DC 2 amp suitable for inductive load

Enclosure Weatherproof and explosion proof (NEMA 4/7)
Area classification NEC Class 1, Divison1, Group-D
Housing CS Nickel plated

Contacts DPDT

Cable Entry 2 Nos. ¾" NPT (F)

4. PILOT VALVE (XPV):

Pneumatic Pilot valve for remote operation with manual reset / shut in

Type	Three-way NC SIGMA 11 RSS 83 or equal
Body trim material	SS 316 Valve to be leak proof with 'O' ring seal
Supply	Instrument air/gas at 7.0 kg/cm2g (10.6 kg/cm2g max.) (Min pressure being 5.5 kg/cm2g)
Signal	0 or 3.5 kg/cm2g instrument air
Accessories	Filter regulator with gauge (1 No.)

5 SOLENOID VALVE (XSV)

Electrical solenoid valve for remote operation (If shown in P&ID)

Type	Three-way NC manual reset/shut in
Connection	Universal, inbuilt terminal box
Body/trim material	SS 316 Valve to be leak proof with O ring seals
Enclosures	Weatherproof and explosion proof (NEMA 4/7)
Area Classification	NEC Class-I, Division I, Group-D
Power supply	24V DC (-ve earthed)
Supply Pressure	Instrument air/gas at 10.6 kg/cm2 (max) 7.0 kg/cm2g (normal) 5.5 kg/cm2g (min.)
Cable entry	¾" NPT (F)
Accessories	Filter regulator with gauge.

NOTES:

a) Valves to be designed and tested as per API-6D or BS-5351 as applicable.

b) Actuator shall be mounted on the valve and tested as follows:

- Cycle (open and shut) each valve with its actuator at least five (5) times to ensure smoothness of operation

- Shut valve and apply hydraulic differential pressure across the valve. Open valve with the installed actuator and note valve operation. Valve operation should not be jerky or binding. This shall be repeated at least three (3) times and shutdown time noted at minimum supply pressure.

c) Test shall be witnessed by company's or company's authorized representative.

d) All soft seated valves shall be of fire safe design as per API 607/API6FA/BS 6755 Part 2 (latest edition) except the valves used in services such as injection water, fire water, pot water service etc.

e) Fire safe tests duly witness and certified by recognized third party inspection agency e.g. LLOYD/DNV/BV/EIC shall be furnished.

g) Valve with actuator shall be suitable for installation in horizontal/vertical lines.

h) Shut down valve is a package with valve vendor having single point responsibility and actuator shall be sourced from ONGC SVL.

7.4 UTILITY HOSE REELS

Galvanized, welded steel hose reel drum with single length (15M min.), non-collapsible, non-shrinkable hose with end connections.

Nozzles wherever required shall be of Elkart SFL make (or equal), 95 GPM capacity suitable for required service conditions.

Hose coupling wherever required shall be KAMLOCK Fig 633A and 634B or equivalent.
Hose reel assembly shall be mounted on a frame.

Hosepipe shall have an external coating of oil and abrasion resistant material unless otherwise specified to protect them from sunlight or mild dew damage.

Each hose reel assembly shall be hydrostatically tested to two times the working pressure or at 21.0 kg/cm2g whichever is higher

7.5 5D RADIUS BENDS

Bends shall be manufactured by hot bending of pipe applying heating only. Company's approval for bending procedures shall be obtained prior to start of work. The adopted procedure shall be such that the finished product shall not require any additional heat treatment after bending. If

such a heat treatment is required, the same shall be permitted only after written approval of company/and/or Engineer-in-Charge.
Bends shall not have any circumferential joint.

No repair by welding is allowed on any part of the bends.

Bulges, dents and flats shall not appear within 100 mm from the ends and for remaining part they shall be as per MSS-SP-75.

Wrinkles : Measurement of the outside diameter shall be taken in the plane of bend at the locations where wrinkles are present (O.D. max) and at locations where wrinkles are not present (O.D. min.). The acceptance limit shall be as given below:

$$\frac{\text{O.D. Max} - \text{O.D Min.}}{\text{Nominal dia}} < 2\%$$

CTOD TEST shall be performed on each size, service & piping class as per BS 7448 PART I.

7.6 SCALE/CORROSION/BIOLOGICAL PROBES & RETRIEVAL TOOLS KIT

1. The scale/corrosion/biological unit shall consist of the following assemblies

A) The access fitting assembly consisting of three parts:

a) Access Fitting Body (Non Tee): Access fitting body shall be of a nominal 2" system. Body shall have a weldolet (Flare Weld) base and 3" ACME Threads on the outlet. Weldolet Base shall be 2" Flare weld size.

b) Plug assembly: solid plug assembly for holding scale/corrosion/ biological probe coupon.

c) Protective Cover: A steel protective cover for the ACME Threads.

B) Corrosion Coupons and Coupon Holder.:

Multiple disc coupons and holders shall be supplied for a nominal 2" system. Holder shall be supplied with mounting and insulating hardware. Each holder shall position three discs. one each at top of line, middle of line, and bottom of the line. Coupons shall be multiple disc type. However, in case wake frequency with multiple disc type is above the acceptable value then contractor shall provide corrosion coupon as per following order of priority:

(i) Contractor shall provide two single disc flush coupon, one at 6 o'clock position and another at 12 o' clock position.

In case space does not permit installation of two coupons as above, then contractor shall provide

(ii) Multiple disc coupon and holder having more than 2" nominal system.

In case, this option is also not feasible, then following option shall be provided.

(iii) Multiple strip coupon and number of coupon shall not be less than 2 numbers.

C) Scale Coupons and Coupon Holder:

Strip coupons of 150 mm (6") length shall be supplied for a nominal 2" system. Scale coupons shall have a range of predrilled holes suitable for monitoring scale buildup. Holder shall be supplied with mounting and insulating hardware. Each holder shall position two strips for bottom of line monitoring.

D) Biological Coupon and coupon holder shall be for nominal 2" system. Holders shall be supplied with mounting and insulating hardware.

2. Retrieval Tool Kit:

A retrieval tool kit shall consist of complete kit for inspection and removal of corrosion coupons. The retrieval tool kit shall be for nominal size of 2" system.

The retrieval tool kit shall be sized for the largest line size and pressure rating and shall be suitable for retrieving all scale/corrosion /biological probes during operation on the platform.

Tool shall be complete with full-bore ball valve kit as per the respective piping class.

Demonstration/ commissioning shall be shown to company's or company's authorized representative about retrieval of all probes while in operation.
All probes to be installed in 6 O'clock position.

All probes shall be accessible for maintenance/retrieval while in Operation.

Quantities of retrieval tool kit shall be one (1) each for each controlling process platform suitable for each type of probe.

7.7 PIG DETECTOR

Pig Detector is a device which indicates the presence of a pig at a specific position in a pipeline.

There are two categories of Pig Detecting device – Intrusive Pig Detector and Non-Intrusive Pig Detector.

7.7A Intrusive Pig Detector:

Intrusive pig detector is static and mechanically activated and as a result of activation of the trigger due to presence of pig in a specific position in the pipeline wherever the pig signaler is installed. Actuating mechanism of an intrusive pig detector is a mechanical trigger therefore; the intrusive pig detector is required to intrude into the pipeline. Intrusive pig detector is required to be suitable to pressure temperature rating and medium flowing inside the pipeline.

Pig detector shall be Bi-directional type mechanical sphere/pig Detector with multiple accessory flexibility.

Accessories: Visual indicator with manual reset, Micro switch lever arm operated, DPDT (Double Pole Double Throw) Type rated for 24 volts DC at 2.0 amps. Inductive load or SPST (single pole single throw) proximity type switch. Enclosure shall be weather proof and explosion-proof as per NEMA-4 & 7, suitable for area classification of Class-1, Division-2, and Group-D. Electrical connections shall be ¾" NPT (F) with two (2) entries.

Accessory may be installed or changed without removing unit from line. Isolation Ball Valve shall also be provided for replacement/maintenance of internal parts.

One tool for removal of pig indicators shall be provided for each platform.

Any possibility of detector being operated by line operating pressure shall not be permitted.
All pig detectors shall have:

Internal parts / Enclosures as given below:

MOC of Connecetd Piping	MOC of Internal parts/Enclosures
CS/C.S (NACE)	S.S 316
D.S.S	D.S.S
Incoloy	Incoloy/D.S.S

External parts : - For C.S /C.S (NACE) -SS-316 except scarfed welding .
- For others it shall be compatible with the MOC of the Piping.

7.7B Non-Intrusive Pig Detector:

Non-intrusive pig detector is device which detects the passage of pig at a specific location. However, design shall be such that the device is not required to intrude in the pipe line on which the detector is installed.

The pig detector shall be bi-directional and suitable for all types of pigs including magnetic as well as non-magnetic pig.

Pig detector shall be such that it can be installed easily on the pipeline. All the required accessories for installation of the detector on to the pipeline shall be provided. Pig detector shall also have facility to detach it easily from its installed position so that same pig detector can be utilized for other pipeline segment.

Pig Detector for well head platform shall have own power/battery source and shall be standard size battery (AA/R6 or C/R 14 or D/R 20) operated. The battery shall not be rechargeable type.

For well head platform, pig detector shall have provision for local display and also remote monitoring at control room of the respective process complex through SCADA interface, separate SPDT volt free contact shall be provided.

Pig detector for process platform shall be 24V DC type.

For process platform, the pig detector shall have provision such that data/information of the detector has local and remote display at control room. The pig detector shall have interface suitable for all type of PLC with smart technology to ensure valid communication is maintained.

The inbuilt Power Source/Battery for system back up (if any) of well head as well as Process Platform shall have a minimum self-life of one year.

Pig detector shall be suitable for salt laden marine environment and highest surface temperature of the pipeline segments under the project.

MOC of the Pig Detector as a minimum shall be Stainless Steel (SS 316).

Design of pig detector shall be such that it can display information related to Pig arrival/departure and shall have the facility to store data for minimum 100 nos. of pig passage events.

Any possibility of detector being operated by line operating pressure shall not be permitted.

Enclosure shall be weather proof as per IP66 and Explosion-proof suitable for ZONE – 1. Electrical connections shall be ¾" NPT (F) with two (2) entries. As a minimum complete enclosure shall be ATEX certified for ZONE-1

In addition to pig detector as specified in clause no. 7.7A, two nos. of non-intrusive pig detectors suitable for the entire pipeline segments (i.e. pipeline segments means pipeline from pig barrel to pig barrel or any part of it) under each project shall be provided.

7.8 HINGED CLOSURES

The hinged closures shall be quick opening type closure with O- ring seats and necessary pressure warning/release devices. These shall be suitable for horizontal or vertical mounting as per layout requirements. Hinge orientation shall be as per approved piping plan.

End closure shall be designed as per ASME Section VIII. Division-I. Quick actuating closure shall be designed that the failure of a single locking component while the vessel is pressurized (or contains a static head of liquid acting at the closure) will not cause the hinged closure to open or leak or result in the failure of any other locking component or holding element or increase the stress in any other component or holding element by more than 50% above the allowable stress of the component.

Corrosion allowance shall be as MOC suitable to respective piping class.

Closure shall be so designed that holding elements of the closure are fully engaged upon closing and that all internal pressure is released before closure can be opened. A vent plug interlocked with clamp ring/operating lever shall be provided to warn the operator if an attempt is made to open the door, before the pig barrel is depressurized.

Clamp type quick closure with bolt tightening at both sides of the door or end closure with exposed screw expander or captive ratchet braces shall not be used.

Lifting Eyes shall be required for size 16" and higher.

The closure shall be approved by ASME- approved third party inspection agency.

The fit up and installation of hinged closure shall be witnessed by the manufacture of hinged closure and a certificate shall be obtained from the manufacturer stating that the hinged closure has been installed correctly and submit to company for approval. And there after a minimum of two closing and opening cycles shall be performed in presence of company approved TPI. The correct operation of both quick opening and safety system shall be established and furnished to the Company.

Wetted Seal Face of Hinged closure of MOC - CS Nace, Non Nace shall be cladded with Incoloy 825 or Inconell 625 by weld overlay as per following:

1. The minimum cladding thickness shall be 3mm.

2. Applicable specification for cladding shall be ASME IX, API 6A and NACE MR01-75/ISO-15156-1/2/3.

3. A complete Overlay Welding Procedure Qualification Record in accordance with ASME IX shall be developed for overlay of nickel based alloy (generally Incoloy 825 or Inconell 625).

4. Testing requirement on cladded seal face:

   (a) Chemical Composition: Chemical composition shall be ascertained by appropriate method for top 2mm of cladding thickness and chemical composition shall be within

limit of nickel base alloy (generally Incoloy 825 or Inconell 625). Iron dilution shall not exceed 10%.

(b) Other tests indicated in FS 2004A for Incoloy 825 or Inconell 625 shall not be applicable for overlay of seal face of hinged closure.

For cladding by over lay, the vendor shall develop their own procedure and testing requirements during detail engineering.

Hinged closure shall be painted as per FS 2005 suitable to marine environment after installation.

7.9 CHOKE VALVES

7.9A Choke valve: (Lift Gas Injection)

Choke is normally used for controlling Flow rate as well as pressure for injection of lift gas into wells.
The body shall be straight line adjustable choke assembly or angle – globe type as indicated in the P&ID.

Trim shall be microform type.

Material of Body shall be compatible with MOC of the connected piping.

Trim material shall be as given below.

MOC of Connected Piping	MOC of Trim
CS/C.S (NACE)	S.S 316
D.S.S	D.S.S
Incoloy	Incoloy/D.S.S

Actuation shall be manual single port design.

Inspection and testing of choke Valve shall be same that of globe Valve indicated in FS 2004A.

7.9B Adjustable Choke Valve: Well fluid flow arm

This part of specification is for adjustable choke valve being used in the well fluid flow arm.

The design and testing of the choke valve shall be as per API 6A. The choke valve shall be angle type. The choke valve shall be generally manually actuated type unless otherwise stated. The actuator design shall also conform the requirement of API 6A. The manually actuated choke valve shall have position indicator as indicated in API 6A in steps of 1/64" and also have locking arrangement.

Body material shall be compatible to connected piping and selected from material indicated in API 6A.

Trim material shall be tungsten carbide to handle fluid velocity at MACH 1 or more.
Trim form shall be cage guided sleeve and designed such that the trim can be changed to multi stage type without change of body.

Trim shall have sufficient stages.

Trim shall meet noise requirement of 85db as per National Institute of Occupational Safety and Health.

Inspection and testing of choke Valve shall be same that of globe Valve indicated in FS 2004A.

7.9C Adjustable Choke Valve: Water Injection

This part of specification is for adjustable choke valve being used in the water Injection Service

The design and testing of the choke valve shall be as per ASME B 16.34. The choke valve shall be angle type unless otherwise dictated by process requirements. The choke valve shall be generally manually actuated type unless otherwise stated. The actuator design shall such that torque requirement is within the limit as indicated in API 6D or any other relevant guide line indicated specification. All-out effort shall be made to keep the torque requirement as low as possible with hand wheel diameter as indicated in API 6D. The manually actuated choke valve shall have position indicator and also have locking arrangement.

Body material shall be compatible to connected piping and high flow velocity fluid.

Trim material shall be tungsten carbide to handle high fluid velocity with abrasive material.

Trim form shall be plug and cage.

Inspection and testing of choke Valve shall be same that of globe Valve indicated in FS 2004A.

7.10 SPRAY NOZZLES

This refers the requirements for the supply of spray nozzles to be installed in a deluge type salt/fire water spray network on the offshore platform.

The spray nozzles shall be attached to piping by means of threaded half couplings or threadolets.

All spray nozzles shall of the Type-Medium velocity, open, non-clog type.

Discharge pattern: Solid cone of dense, far reaching water fog.

Spray nozzles shall meet NFPA-15 requirements and shall be approved by

Underwriters Laboratories, USA/VJTI, Mumbai, India.

Materials: Nozzles (including deflector plate): copper alloy of a grade suitable for salt water service and marine atmosphere, material to 5% Ni-Al-Bronze conforming to BS-1400 AB 2C/, BS EN 1982 C333G/ASTM B 148 C 95800 or equivalent.

7.11 FIRE AND FOAM HOSE REELS

Galvanized, welded steel hose reel with single length (18 M min.) 1½" (ID) all rubber non-collapsible, non-shrinkable hose with brass couplings.
Nozzle shall be an Elkhart SFL (or equal, 95 GPM capacity with straight steam or fog capability, of chrome-plated brass for salt water service. Supply shall also include an AFFF 6% concentrate, tank constructed of 316 SS. Hose reel shall be mounted on the top of tank having capacity of 30 Gal (US). (Minimum).

Eductor system shall be of bypass type with metering valve for foam control 0% to 6% setting and a transparent pick-up tube.

Hose shall be Neoprene rubber lined and have an external coating of oil and abrasion resistant material to protect them from sunlight or mild dew damage.

Hose reels shall have underwriters laboratory/US coast Guard/FM approval. Hose shall be suitable for maximum working pressure of 14 kg/cm2 and tested to 21 kg/cm2g.

Design and construction of hose reel station shall be in accordance with NFPA and relevant Codes and Standards.

7.12 CONTINUOUS DRAINERS

Continuous Drainers shall be direct acting float operated type with MOC compatible with connected piping as per P&ID and with RF flanged ends to ASME 150/300 as applicable for 2"and above, Screwed for 1-1/2 and below.

Contractor to select proper valve and seat to ensure that continuous Drainers shall operate at 3 times the normal flow.

All continuous Drainers shall be suitable for the intended applications.

All continuous Drainers shall be supplied with line size Y-type strainers.

7.13 CHEMICAL UTILITY, HOSES & HOSE CONNECTION

1. HOSES

The manufacturer shall guarantee the suitability of the hoses for the intended service and working conditions .

The requirement of Materials, Construction, Dimensions and Testing of Hoses shall be as per approved applicable codes & relevant piping class of approved P&ID'S.

The nipples shall have male threads and be made from seamless pipe conforming to ASTM A312 TP 316 unless stated otherwise.
Nipples shall be built-in-type i.e. vulcanized with the Hose such that normal flexing and stretching will not subject it to stresses which might cause breakage/damage.

Each hose shall be hydrostatically tested to two times the working pressure, or at 21.0 kg/cm2g whichever is higher.

The length of finished hose assembly shall not differ from nominal length by more than +2% and –1%. For this purpose the hose assembly shall be measured after being subjected to tests. All hoses shall be of single hose lengths.

All hose assemblies shall be suitable for Marine Environment and shall be resistant to aging, abrasion, sunlight and dews.

All hoses shall be non-collapsible type and able to withstand full suction.

All potable water hoses shall be FDA approved types. All hoses for chemical diesel and hydrocarbon service shall be fire-resistant type as per United States Coast Guard (USCG).

2. HOSE CONNECTIONS

A. Description:

a) KAMLOCK type couplers and adapters for use in hose connections of different services is as under:

b) KAMLOCK Type Hose Couplings: KAMLOCK Type Hose Couplings shall be KAMLOCK 633-D Services with NPTF ends with adapter KAMLOCK 633- A Series with NPTF ends and dust plug (KAMLOCK 634A/634B series).

Foster one-way shut-off 6 series industrial interchange quick detachable type plug and socket for use in hose connectors.

B. Materials:

Body (coupler, adaptor and dust plug type) - 316 L (Stainless Steel)
Cam Arms and Pins - 316 (Stainless Steel)
Gasket - PTFE/Buna-N.

C. Each coupler, adopter and dust plug shall be subjected to a hydrostatic test at 21 kg/cm2g or at two times the working pressure whichever is higher.

7.14 HAND CONTROL VALVE

a) Body & Bonnet Material: Carbon Steel 'ENP' Coated

b) Trim Material : Tungsten Carbide/Stainless Steel with stellite facing.

c) Type of Trim : Variable Resistance trim

d) Type of Valve : Multistage Pressure Reducing Valve (FO)

e) Operation: Pneumatic Actuator with manual override available gas with supply pressure 8.0 g/cm2 (g) (Maximum Pressure 10.6 kg/cm2(g) (Minimum Pressure 5.5 kg/cm2(g)

g) Function: To divert derated sea water of 0.02 mg/lit. oxygen (sometimes raw sea water with 7 ppm oxygen) over board during start-up and pre-commissioning operations. Inlet from de-rated seawater header and outlet dumped to sea.

Notes for Valve:-

Valve shall be 100% radio graphed as per the procedure and acceptance criteria specified in ANSI B 16.34 latest edition.

Vendor shall furnish sizing calculations, material of construction etc. along with quotation and shall also furnish predicted noise level calculations with the quotation.

Vendor shall perform the functional test at offshore. To ensure cavitation/vibration free operation, pressure drop and noise level to be within specified/acceptable limits. In case there is a fault/malfunctioning vendor must replace the parts/complete valve or carryout necessary rectification is at his cost.

Trim shall be anti-cavitation, anti-corrosion, anti-erosion and anti-noise type.

An input torque limiter shall be provided in order to close the valve adequately to avoid wiring erosion.

Vendor shall submit the recommended piping installation drawings upstream and downstream of the Hand Control Valve in order to minimize the noise level.

Valve shall be equipped with a seat incorporating Teflon insert to avoid wiring erosion.

A restriction orifice assembly shall be provided downstream of each Hand Control Valve. Hand Control Valve Vendor shall decide intermediate pressure (PA).

A complete restriction orifice plate with matching flanges shall be supplied along with Hand Control Valve to suit working conditions as specified.

All external hardware to be suitable for offshore service where the atmosphere is salt laden and corrosive.

Valves shall be with 'Variable Resistance Trim concept which allows cavitation free operation. Vendor shall provide Pneumatic actuator spring return type.

One pressure regulator with ϕ150mm (0-100%) dial allowing to deliver 3-15 psig to the valve positioner along with adapting parts. Vendor shall supply one pressure regulator with gauge reducing the instrument air pressure from 10.6 kg/cm2g to 20 psig along with adapting parts for mounting on 2" pipe for Pneumatic Actuator Manual holding station.

7.15 FLAME ARRESTORS

Body shall be of 316 SS bank. End connection shall be flanged. Weather- hood shall be provided wherever necessary. Flame arrestor shall be listed by UL/ FM or equivalent, if applicable. Design standard for Flame Arrestor shall be BS EN ISO: 16852 or Equivalent.

7.16 DOUBLE BLOCK AND BLEED VALVE

Double Block and Bleed Valve under this specification means a device having two Ball Valves in the main flow line for isolation and a needle Valve installed in between the two ball Valves to bleed the fluid trapped between the Isolation Ball Valves. The design of two isolation ball valves and the needle Valve shall be same as that of Ball Valve/Needle Valve as described elsewhere in the bid package.

The combination of both the Ball Valve and the needle shall be of integral and single assembly. It is preferred that both the Ball Valves and the Bleed Valve assembly is of compact design so that space requirement is as less as possible.

An assembly having two independent ball valves and an independent needle Valve assembled together is not acceptable wherever Double Block and Bleed Valve are specified in the bid package. End connections can be flanged by flanged or flanged by screwed. Vent connection shall be ½" NPT as standard.

Piping or tubing (as applicable) shall be routed to nearest vent or drain line (as applicable).

Torque requirement and hand wheel/lever of both the Ball Valves and Needle Valve shall not be more than as specified in API 6D or any guide line specified in Bid Package.

Testing requirements of Ball Valves and Needle shall be same as that of respective valve standards under which Valves are designed.

Double Block and Bleed Valve assembly shall be of fire safe design as per API 607/API6FA/BS 6755 Part 2 (latest edition) except the valves used in services such as injection water, fire water, pot water service etc.

7.17 VALVE FOR HIPPS (High Integrity Pressure Protection System)

HIPPS as defined in this specification is Instrumented System of High Reliability for isolation of topside facilities or pipeline from pressure source before allowable pressure is exceeded beyond the design pressure at Down Stream of HIPPS.

This specification of HIPPS is a functional description indicating requirements for design and manufacture of main process isolation Valves used in HIPP System. Since HIPP System calls for high reliability and redundancy, minimum two numbers of isolation Valves shall be installed in each HIPP System. Valves used in HIPPS shall be termed as Primary Process Isolation Valve & Secondary Process Isolation Valve. For items/equipment other than the main process isolation valves refer scope of work and Functional Specification of HIPPS enclosed in the bid package.

Reliability and Safety Integrity level of the main process isolation valve must be same as that of the complete HIPPS including instruments and other items and equipment used along with the HIPPS.
Valves used in HIPPS shall comply with following:

Type: Ball valve or Axial Flow Valve.

Application:
(a) Piggable Pipeline - Full Bore Ball Valve.
(b) Non-Piggable Pipeline or Piping at top Side - Axial Flow Valve or Full Bore Ball Valve.

Size: As per P&ID.

Others: **Full Bore Ball Valve:** Valves rating; flange facing; body, piston, seat and trim material, packing etc. shall be to the Piping Functional Specification, FS 2004A. Valves shall have flanged ends irrespective of line sizes and class rating. Metal seated Ball valves may be considered for HIPPS application.

Axial Flow Valve: Valves rating; flange facing; body, Piston, seat and trim material, Packing etc. shall be to the Piping Functional Specification, FS 2004A. Valves shall have flanged ends irrespective of line sizes and class rating. Flow passage area of the valve shall be equivalent to full bore Ball Valve of same size to ensure pressure across the valve is equivalent to full bore Ball Valve of same size. In case of Axial Flow Valve, there is possibility of kinetic energy of fluid getting dissipated on the piston of the Valve. Hence MOC of part of trim which faces high velocity fluid directly on its surface shall be of a material suitable for the purpose i.e hardness of surface shall be

increased by using material such as tungsten Carbide, stellite, DSS, Incoloy, Inconel etc. based on fluid velocity and fluid characteristics.

Torque: Actuator Torque required to operate the valve shall be at least 1.5 times more than Break away torque of the Valve.

Installation: Valve installation shall be Horizontal unless otherwise established that Horizontal installation is not suitable for the purpose.

Shutdown time: Shut Down time shall be as dictated by Functional Specification of HIPPS enclosed in Bid package but preferred time for shut down shall be less than 0.2 Sec/inch diameters in case Specification of HIPPS does not dictate this parameter.

Valve Design: (a) Full Bore Ball Valve:
Refer FS 2004A for details.

(b) Axial Flow Valve:
Design Standard: API 6D or BS EN ISO 17292 (Up to 2") and design must be fire safe design.

Leakage Rate: Ball Valve:

(i) Acceptable leakage rate for hydro test- No visible leakage (Rate-A for soft seated valve & Rate-B for metal seated Valve).

(ii) Acceptable leakage rate for pneumatic/nitrogen gas test – Tight Shut off leakage rate- VI (ANSI class VI leakage)

Axial Flow Valve:

(i) Acceptable leakage rate for hydro test-No visible leakage (Rate-A).

(ii) Acceptable leakage rate for pneumatic/nitrogen gas test – Tight Shut off leakage rate- VI (ANSI class VI leakage)

PST (Partial Stroking): Ball Valve: Design of the Valve shall be such that there is provision to partially stroke the valve without effecting shut down of the process.

Axial Flow Valve: Design of the Valve shall be such that there is provision to partially stroke the valve without effecting shut down of the process.

SIL Level: Safety Integrity level of HIPPS Valve shall be same as that of complete HIPPS system described in HIPPS specification i.e. C-104 and Valve shall be proven in use with the required SIL Level as indicated in C-104.

All hydrocarbon valves are to be supplied as per approved P&ID's to meet NACE-MR-01-75 (latest edition) and Piping Design Criteria.

Actuator shall be mounted on the valve and tested as follows:

- Cycle (open and shut) each valve with its actuator at least five (5) times to ensure smoothness of operation.

- Shut valve and apply hydraulic differential pressure across the valve. Open valve with the installed actuator and note valve operation. Valve operation should not be jerky or binding. This shall be repeated at least three (3) times and shutdown time noted at minimum supply pressure.

c) Test shall be witnessed by company's representative or company's authorized representative.

d) All soft seated valves shall be of fire safe design as per API 607 or API6FA or ISO 10497 or BS 6755 PART II (latest edition) except the valves used in services such as injection water, fire water, pot water service etc.

e) Fire safe tests duly witness and certified by recognized third party inspection agency e.g. LLOYD/DNV/BV/EIC shall be furnished.

NOTE: HIPPS system shall be a package item with component vendors as enlisted in SVL. For new PQDs of HIPPS System Package, PTR for the HIPPS package shall be for complete package supplied to various offshore oil and gas projects and shall be submitted with satisfactory Performance feedback for 2 years service OR in the form of repeat PO copies with a minimum time gap of 2 years from the date of delivery. The major components of the package are Logic Solver, valve & Actuator which shall remain same as supplied in package (considered for PTR) above.

7.18 SAMPLE BOMB

Sample bomb shall be designed as per ASME Sec VIII Div I . Hose for sample bomb assembly shall be fire-resistant type as per United States Coast Guard (USCG).

8.0 SPARES

Manufacturer shall recommend and provide the spares required for startup and commissioning for all specialties.

Manufacturer shall recommend and provide a list of spares needed for one-year operation and maintenance for all specialties.

9.0 WARRANTY

Vendor shall warrant all the piping specialties furnished by him in accordance with Piping Design Criteria (Vol II sec 3.3).

FUNCTIONAL SPECIFICATION FOR INSULATION OF PIPING & EQUIPMENT

Prepared By	Peer Reviewed By	Reviewed By	Approved By	Total No. of Pages	Date	Rev. No.
RY	PS	SKS	MS	46	12.11.2021	3

REVISION STATUS RECORD

PS	GJ	JSS	46	07.12.06	2
BLS	MP	JSS	45	01.01.05	1
PREPARED / REVISED BY	REVIEWED BY	APPROVED BY	TOTAL No. OF PAGES	DATE	REV. No.

CONTENTS

1.0 INTRODUCTION
1.1 General
1.2 Exclusions
1.3 Contractor's Responsibilities
1.4 Application of this Document

2.0 CODES AND STANDARDS
2.1 Codes, Standards and Regulations
2.2 Project Specifications
2.3 Mandatory Indian Statutory Requirements

3.0 ENVIRONMENTAL DESIGN CRITERIA
3.1 Design Basis Climatic Conditions
3.2 Seismic and Transportation Loads

4.0 GENERAL REQUIREMENTS
4.1 Items Requiring Insulation
4.2 Exclusions

5.0 MATERIALS
5.1 General
5.2 Classifications
5.3 Materials for Low Temperature Services (Class C)
5.4 Material for Heat Conservation Insulation (Class H)
5.5 Materials for Personnel Protection (Class PP)
5.6 Material for Acoustic Insulation (Class IA)
5.7 Sealers & Accessories
5.8 Materials for Weatherproofing & Ancillaries
5.8.1 General
5.8.2 Pipework & Equipment less than DN610
5.8.3 Piping & Equipment greater than DN610

6.0 INSULATION THICKNESSES

7.0 INSTALLATION

7.1 Application of Low Temperature Insulation (Class C)

7.1.1 Items Requiring Insulation

7.1.2 General Application

7.1.3 Piping Application

7.1.4 Equipment Application

7.1.5 Vapour Barriers

7.2 Installation of High Temperature Insulation (Class H)

7.2.1 General

7.2.2 Piping Application

7.2.3 Vessel & Equipment Application

8.0 INSPECTION, TESTING & CERTIFICATION

8.1 Quality Assurance

8.2 Inspection of Materials

8.3 Pre-Insulation Inspection

8.4 Final Inspection & Release

8.5 Testing

9.0 APPLICATION DETAILS

9.1 Pipe Insulation-Class H

9.2 Pipe Insulation-Class C

9.3 Termination of insulation on pipework

9.4 Valve insulation Class H

9.5 Valve insulation Class C

9.6 Vertical support for Class C insulation

9.7 Expansion/Contraction joints

9.8 Insulated supports for vertical insulated pipe

9.9 Typical detail for flanged joint Class H

9.10 Vessel support, flashing & weatherproofing details Class H insulation

9.11 Insulation support ring detail Class H insulation

9.12 Vessel support, flashing & weatherproofing details Class C insulation

9.13 Typical vessel nozzle flange detail for Class C insulation

9.14 Valve box cover construction

1.0 INTRODUCTION

1.1 GENERAL

This Specification gives the minimum requirements for the thermal and personnel protection insulation of piping and equipment (vessels, heat exchangers, pumps, etc.) and method of application.

Equipment and piping shall be insulated for the purposes of conservation of heat, maintenance of stabilized process temperatures during atmospheric temperature changes, condensation prevention, burn prevention of personnel or limiting noise levels according to the classification nominated.

1.2 EXCLUSIONS

This Specification does not cover:

- Electrical insulation or heat tracing
- Acoustic insulation of equipment
- Acoustic or thermal insulation of HVAC equipment or ducting
- Passive fire protection insulation for structures

1.3 CONTRACTOR'S RESPONSIBILITIES

This document shall form the basis upon which the EPC Contractor can develop a detailed specification. The document presents the findings of the Definition Engineering Study and as such, should be considered as a general specification. The Contractor should update this document with the detailed design information that is developed during the detailed design phase.

Further the contractor shall be responsible for the complete design, selection, supply, installation and inspection of insulation on piping and equipment, including full compliance with all applicable Codes and Standards, including those listed in section 2.0 of this Specification.

1.4 APPLICATION OF THIS DOCUMENT

The scope of this document is limited to this project & associated modifications. This document shall not be used for any other purpose.

2.0 CODES AND STANDARDS

2.1 CODES, STANDARDS AND REGULATIONS

The insulation covered by this Specification shall be designed, manufactured and tested in accordance with the requirements of this Specification, the attached Data Sheets and the following latest edition of Codes, Standards and Statutory Regulations (where applicable)

ASTM C165	Test Method for Measuring Compressive Properties of Thermal Insulation
ASTM C195	Mineral Fibre Thermal Insulating Cement
ASTM C303	Test Method for Density of Preformed Block Type Thermal Insulation
ASTM C335	Test Method for Steady-State Heat Transfer Properties
ASTM C449	Mineral Fiber Hydraulic Setting Thermal Insulation and Finishing Cement
ASTM C518	Test Method for Steady-State Heat Transmission Properties
ASTM C547	Mineral Fibre Pre formed Pipe Insulation

ASTM C552	Cellular Glass Block and Pipe Insulation
ASTM C591	Un-faced Preformed Rigid Cellular Polyurethane Thermal Insulation
ASTM C592	Mineral Fibre Blanket Insulation
ASTM C612	Mineral Fibre Block & Board Thermal Insulation
ASTM D1621	Test Method for Compressive Properties of Rigid Cellular Plastics
ASTM D1622	Test Method for Apparent Density of Rigid Cellular Plastics
ASTM D2126	Test Method for response of Rigid Cellular Plastics to Thermal & Humid Aging
ASTM D6226	Test Method for Open Cell Content of Rigid Cellular Plastics
ASTM D3014	Test Method for Flame Height, Time of Burning & Loss of Mass of Rigid Thermoset Cellular Plastics in a Vertical Position
ASTM E84	Test Method for Surface Burning Characteristics of Building Materials
ASTM E96	Test Method for Water Vapour Transmission of Materials
ASTM C1055	Standard Guide for Heated System Surface Condition that Produce Contact Burn Injuries
ISO 13732-1	Ergonomics of the thermal environment-Methods for the assessment of human responses to contact with surfaces-Part 1: Hot surfaces
ASTM C 1696	Standard Guide for Industrial Thermal Insulation System
IS 3150	Indian Standard-Standard for Hexagonal Wire Netting for General Purposes
API 574	Inspection Practices for Piping System Components

2.2 PROJECT SPECIFICATIONS

The insulation covered by this Specification shall be designed, manufactured and tested in accordance with the requirement of these Project Specifications.

1. Piping fabrication (FS 2004B)
2. Piping Specialties (FS 2004D)
3. Protective coatings (FS 2005)

2.3 MANDATORY INDIAN STATUTORY REQUIREMENTS

This document has been prepared to the international standards detailed within. The EPC Contractor shall ensure that the Scope of Work is executed in accordance with all mandatory Indian Statutory requirements.

3.0 ENVIRONMENTAL DESIGN CRITERIA AND UTILITIES

3.1 DESIGN BASIS CLIMATIC CONDITIONS

The environment conditions & climates under which the Equipment & piping will operate is as below.

Temperature: 16-40°C
Relative Humidity: 90% (max) at 40°C
Air Quality: saline, humid, corrosive

Designs shall be based on outdoor exposure to the conditions described. Conditions specific to the relevant Equipment Package & process parameters related to piping will be detailed by the contractor on individual Equipment Data Sheets as per approved P&ID's on the basis of process design criteria attached elsewhere in bid package and the same shall be submitted to the company for review.

3.2 DESIGN LIFE

The process facilities design life requirement is 25 years.

4.0 GENERAL REQUIREMENTS

The Supplier's standard designs (if applicable) which meet the performance requirements and which will operate in the marine environment documented in Section 3.0 for 25 years may be considered with prior approval of Company

4.1 ITEMS REQUIRING INSULATION

- Items shall be insulated for the purpose of conservation of heat, temperature stabilization, personnel protection, condensation prevention (anti-sweat) or limiting noise levels.

- Piping operating with fluid temperature in excess of 54^0C or below 10^0C shall be insulated as burn or freeze protection for personnel to a height of 2.1m above grade and platforms and 0.6m outside the platforms, walkways, etc. with the exception that lines operating above 200^0C shall be fully insulated.

- Heat transfer equipment in hot services, other than coolers and condensers, shall be completely insulated except for supporting members and flanges. Shell flanges, channel flanges and nozzle necks shall not be insulated. Nozzle necks shall be insulated to the nozzle flanges.

- All piping and equipment operating with fluid temperatures below 27^0C shall be insulated for condensation prevention ("anti-sweat"). Nozzles, components and appurtenances shall be insulated and covered with vapor barrier and weatherproof cladding.

- All accessories (such as level controllers, level gauges, pipe bridles, etc.) which are attached to insulated equipment shall be insulated with equivalent thickness and materials required for the equipment. The insulation shall not obstruct operation or necessary viewing of equipment components, drains, vents and sample points.

- Piping that is considered a potential source of noise should be acoustically insulated. A noise and vibration specification shall be as per spec 5002 and 5004 respectively.

4.2 EXCLUSIONS

The following hot parts shall not be insulated, except for burn protection:

- Man ways, manholes and inspection openings on hot vessels.
- Code inspection plates and nameplates
- Connectors and tube unions on fin-tube heat exchangers
- Flanges of piping and equipment in hot service
- Expansion and rotating joints

5.0 MATERIALS

5.1 GENERAL

All new materials shall be used. Materials showing any evidence of containing contamination or moisture shall not be used.
Insulation materials for equipment and piping shall be suitable for the application, operation, and temperature and be compatible with the contained fluids.

Insulation materials shall have the following properties:

- Completely free from all forms of asbestos.
- Water-soluble chloride and fluoride ion concentrations as low as possible, 20 ppm by mass maximum.
- Chemically neutral, with pH preferably between 7 and 8 in the wet condition.
- Non-combustible and odorless at operating temperatures.

- Have sufficient compressive strength that the method of fixing and finish shall not damage the insulation.

Phenolic and polyisocyanurate (polyurethane) foams shall not be used for services, which may exceed 100°C because these produce toxic smoke when burning.

Any wire mesh reinforcement shall be stainless steel grade 316. For size and details of wire mesh refer IS 3150 or any other international Standard as applicable. Size of aperture shall be 19 to 25mm and wire diameter shall not be less than 0.8mm.

Any required painting, protective coatings and the procedures used for the preparation of surfaces shall be as specified in the Project Specification for Protective Coatings spec. 2005.

5.2 CLASSIFICATIONS

The Line schedule and the Piping and Instrument Diagrams shall indicate the thickness and insulation classification required.
The following insulation classifications are described in this Specification:

C Low temperature insulation designated for processes with operating temperatures below 21^0C where heat gain is undesirable, or for the prevention of condensation on pipes and equipment with operating temperatures below 27^0C.

H Heat conservation insulation designated for all processes (except heat transfer fluids) with operating temperatures at or above 25^0C.

PP Personal protection insulation designated for equipment and vessels with operating temperatures in excess of 54^0C or below 10^0C.

IA Acoustic Insulation to restrict noise emanating on account of fluid velocity inside piping and due to vibration in piping and equipment.

5.3 MATERIALS FOR LOW TEMPERATURE SERVICES (CLASS C)

The following materials shall be used for piping and vessel insulation for Class C:

- Preformed or foamed-in-place polyurethane for piping up to and including DN610. However, Polyurethane block or segment may also be used for piping greater than DN610 based on vendor input during detail engineering. Same shall be brought to notice of company.

- Polyurethane blocks, segments or foamed in place sections for piping and vessels greater than DN610.

Polyurethane foam shall conform to ASTM C591, Type 11, with a flame spread rating not exceeding 25 in accordance with ASTM E84. Higher density and higher strength foam may be used as load bearing insulation if the properties are approved.

Insulating material used on austenitic steel surfaces shall contain less than 20 ppm leachable chlorides and a minimum of 20 ppm sodium silicate for each part per million of leachable chlorides.

Foamed in place polyurethane foam shall, as a minimum, conform to the following:

- Density of the core shall be between 30 and 35 kg/m3.

- Thermal Conductivity shall not exceed 0.019 W/mK when the foam is new and cured. This value shall be based on a mean temperature of 25^0C as determined in accordance with ASTM C518.

- Flammability shall be guaranteed to have a flame spread classification not exceeding 75 in accordance with ASTM E84.

- Compressive Strength in accordance with ASTM D1621 shall be not less than 170kN/m.

- Closed Cell Content shall not be less than 90%. The cell structure shall be uniform throughout the core and the average cell size shall be no more than 0.40 mm. Elongated cells shall be no longer than three times the smallest dimension. These requirements are to be verified in accordance with ASTM D6226.

- Dimensional Stability: the maximum volumetric change shall not be more than 6% after 7 days exposure at 75 ± 3^0C and 100+0/-3% relative humidity in accordance with ASTM D2126.

- The permeability shall not exceed 2.5 perm in accordance with ASTM C335.

- Friability: A 6 mm cube, when properly cured, shall not powder when crushed.

- Vapor barrier coatings shall cover insulation completely before weatherproofing is installed and have the following characteristics:

    - They must be compatible with the process piping insulation

    - They must be flexible at the lowest temperature to which they are exposed

    - Permeability shall not exceed 0.03 perm in accordance with Procedure E of ASTM E96 for the thickness used.

    - Minimum dry film thickness shall equal or exceed 0.76 mm

    - Flame spread rating shall not exceed 30 in accordance with ASTM E84.

    - They shall be weatherproof and non-absorbent and shall constitute a vapor barrier

5.4 MATERIAL FOR HEAT CONSERVATION INSULATION (CLASS H)

Thickness shall be in accordance with Section 6 of this specification.

The following materials shall be used for piping and equipment insulation for Class H:

- For equipment and piping which is to be operated intermittently or continuously at temperatures not exceeding 100^0C, the insulation may be rigid urethane foam.

- For equipment operated intermittently or continuously above 100^0C or for acoustic insulation applications, the insulation may be calcium silicate. Calcium silicate insulation which contain asbestos filler shall not be acceptable.

- For equipment and piping which is to be operated intermittently or continuously at temperatures up to 260^0C, primary insulation may be foam glass complying with ASTM C552 and with density of at least 88kg/m3 and a temperature rating of 315^0C.

- For equipment and piping which is to be operated intermittently or continuously at temperatures up to 500^0C, the insulation may be mineral wool with temperature rating of 500^0C. All mineral wool shall be water repellent and tested for water absorption and retention.

Mineral wool blankets for piping and vessels greater than DN610 (24“) shall conform to ASTM C592. They shall have density of at least 128 kg/m3 and shall be faced with wire mesh inside and either wire mesh, expanded metal, or glass mat outside.

Mineral wool preformed sections shall be used for piping larger than DN40 and up to and including DN610. They shall conform to ASTM C547, have density of maximum 160 kg/m3 and shall be faced with wire mesh inside and wire mesh or glass mat on the outside.

Mineral wool blocks and boards shall conform to ASTM C612. Their maximum nominal density shall be 160 kg/m3.

5.5 MATERIALS FOR PERSONNEL PROTECTION (CLASS PP)

Piping, vessels and equipment operating at a temperature of 54^0C and above, or below 10^0C for a cold service and not falling within any other insulation category, shall be protected by Stainless Steel metal mesh guard or similar protective material. The minimum distance between hot or cold surfaces and guarding shall be 32mm.

Where this is not practical, thermal insulation, Class H or C as appropriate, shall be applied.

5.6 MATERIALS FOR ACOUSTIC INSULATION (CLASS IA)

Piping and Vessels which is potential source of noise on account of any reason such as process flow or due to vibration on piping and equipment or any other reason shall be insulated for limiting noise. Requirement of acoustic insulation in piping, vessels and Equipment shall be as per process data and applicable specification i.e. FS 5002.

While finalizing acoustic insulation circumstances of combination insulation system such as cold insulation and acoustic insulation, hot insulation and acoustic insulation as well as Personal protection insulation and acoustic insulation may be required to be addressed depending upon process requirement. Same shall be finalized during detail engineering.

Material for acoustic insulation shall be Mineral wool, glass fiber or calcium silicate. The thickness required for acoustic insulation shall be as indicated in clause no. 6 of this specification.

For General guidance of acoustic insulation, ASTM C 1696: Standard Guide for Industrial Thermal Insulation System, clause no.7.2.8 may be referred.

5.7 SEALERS & ACCESSORIES

Flashing compounds, joint sealers and bedding compounds shall be permanently flexible through a temperature range of -18^{0}C to 500^{0}C, be capable of withstanding repeated expansion and contraction without cracking and experience minimum shrinkage.

All metal accessories shall be stainless steel SS316.

Wire to secure insulation shall be a minimum of 1.2mm annealed stainless steel. Heavier stainless wire or cable shall be used for insulation on vessel heads where floating rings are employed.

Expander bands shall be capable of remaining in tension during the heating and cooling cycles experienced during normal operation.

Breather springs for bands (if used) shall be capable of remaining in tension during the heating and cooling cycles experienced during normal operation.
Screw fasteners shall be stainless steel, self-tapping with pan heads.

Wire mesh for cement reinforcement shall be 25mm hexagonal mesh with 0.8mm diameter Monel or stainless steel wire.

Mineral wool insulating cement shall meet the requirements of ASTM C449, and be suitable for temperatures up to 315^{0}C.

Finishing cement shall be asbestos free, meet the requirements of ASTM C449 and shall be suitable for temperature up to 315^{0}C. It shall be fast drying cement that provides smooth, hard surfaces when dry. The cement shall contain a corrosion inhibitor to prevent corrosion when wet.

5.8 MATERIALS FOR WEATHER PROOFING & ANCILLARIES

5.8.1 GENERAL

Jacketing materials for vessels, equipment and piping shall be stainless steel grade 316 or Aluminum as per ASTM B 209, corrugated in accordance the thickness and corrugation requirements as follows:

- For piping, for vertical vessels with 0.40mm thick with 32mm corrugations and for all horizontal vessels, shall be 0.40mm thick with 5mm corrugations.
- In case aluminum is used, it shall be epoxy coated on exterior surface for all services and also for interior surface when used over calcium silicates.

Jacketing shall be installed and supported to withstand direct fire hose stream impingement, site and climatic conditions.

5.8.2 PIPE WORK & EQUIPMENT LESS THAN DN610

Stainless steel jacketing used for pipework shall be so arranged that it shed water at all times. Overlaps shall be swaged and rendered watertight. Bands for piping shall be at least 12mm wide x 0.4mm thick and secured with wing type seals.

Jacketing for flange, valve and in-line instrument boxes shall be fabricated from stainless steel flat sheet as used for cladding of the adjacent pipework and shall be built in at least two parts. Joints in the jacketing at pipe tees, branches, welds, etc. shall be sealed with stainless steel segmented flashing or preformed sections and metal seam sealant.

5.8.3 PIPING & EQUIPMENT GREATER THAN DN 610

Panels on vessels and large diameter equipment shall be held tight over the insulation by means of 316SS circumferential metal bands and attachment to insulation support rings. Panels shall have minimum overlaps of 100mm for vessels and 50mm or pipes. All overlaps, which are not subject to thermal expansion, shall be rendered watertight by use of a metal seam sealant.

Bands shall be positioned on all horizontal overlaps and at 300mm centers maximum. The bands shall be held in their relative positions with clips fitted to jacketing at suitable centers. Bands for equipment and vessels shall be at least 19mm wide x 0.5mm secured with wing type seals. Breather springs with flat bands shall be used where required for expansion or contraction.

Vessel head jacketing shall consist of preformed flat stainless steel sheets in a 'segmented' construction with all radial seams overlapping. The exact method of construction shall be made available to the Company for review.
The Supplier shall propose details of methods of attachment and support of jacketing.

The vessels, nozzles and piping shall have removable plugs in insulation lining for facilitating of thickness check (ultrasonic) of wall during lifetime of vessel. Typical drawings for the same are enclosed. Plug shall be made with the compatible materials. For nozzle pocket (plug) shall be in four directions at the center of the nozzle.

Insulation plugs for thickness survey shall be as per API 574 or any other international Standard. Insulation Plug shall be in four directions i.e. 6 O'clock, 3 O'clock, 12 O'clock, 9 O'clock position other than piping having branch connection. In location of branch connections, insulation plug shall be installed in three directions depending on orientation of branch connection.

6.0 INSULATION THICKNESS

The following insulation thickness are to be applied to piping and equipment for the various applications:

MINIMUM THICKNESS OF INSULATION (MM)

Nominal Equipment Size or Diameter of Pipe	Cold to 10^0C	Aco stic	Burn* r Freeze Stabili-n	20 to 70	71 to 100	101 to 200	201 to 300	301 to 400	401 to 500
DN40 & smaller	40	75	25	25	25	40	50	75	90
DN50 to DN100	50	75	25	25	40	50	75	100	120
DN150	50	75	25	25	40	65	75	115	140
DN200 & larger	65	75	40	40	40	80	100	145	170

* For line temperature greater than 301 deg. C, the burn protection insulation thickness shall be as specified for conservation of heat.

Where the insulation thickness requirement exceeds 80mm, the insulation shall be applied in not less than two staggered layers.

7.0 INSTALLATION

7.1 APPLICATION OF LOW TEMPERATURE INSULATION (CLASS C)

7.1.1 ITEMS REQUIRING INSULATION

All pipe, valves, flanges and fittings shall be insulated. Valves shall be insulated to the packing gland.

Vessel and exchanger flanges, manhole covers, and all appurtenances shall be insulated. All attachments to the vessel or exchanger such as skirts, supports, ladder and platform clips, etc. shall be covered with insulation for a distance of three (3) times the basic insulation thickness, with the vapour barrier continuing and sealing to the metal.

7.1.2 GENERAL APPLICATION

Insulation shall not be applied until welds have been inspected, the piping system has been pressure tested, and all related piping and equipment has been painted, in accordance with the relevant Project Specifications.

The insulation manufacturer's installation recommendations shall be followed. In the event of conflict between manufacturer's recommendations and this Specification, the former shall govern.

Piping, vessel and equipment insulation thickness shall be as shown in Section 6. The thickness listed is those required to prevent condensation forming on the insulation surface at 200 C and a relative humidity of 85%.

7.1.3 PIPING APPLICATION

Contraction joints shall be provided on straight runs of piping at 10m intervals.

Insulation supports shall be provided on vertical piping immediately above each pair of flanges and at contraction joints.

Pipes, valves and fittings shall be fitted with preformed insulation and secured in place with bands placed on 230mm centers. Joints are to be snugly butted together and sealed with joint sealer. Voids between fittings and fitting covers shall be filled with glass fibre insulation.

Insulation shall be installed around valves and flanges so as to allow removal and re-use without damage to the insulation or jacketing.

Pipe, fittings and valves of insulated lines shall be weatherproofed with a metal jacket. The jacket shall be secured with bands on 230mm centers. A band shall be applied over each circumferential lap joint.

7.1.4 EQUIPMENT APPLICATION

Insulation shall be installed around access hatches, inspection hatches, manholes and exchanger tube sheet flanges, vents, drains and sample points so as to allow removal and re-use without damage to the insulation or jacketing.

For vessels and tubular equipment DN610 and smaller, pre-formed pipe insulation shall be used. Insulation may be blocks, beveled lags, or curved segments for vessels and exchangers DN610 and larger. All such pieces of insulation shall be beveled or shaped to fit closely to the contour of the equipment.

Insulation on vertical vessels and tubular equipment shells shall be secured in place with bands on approximately 300mm centers. Where irregular surfaces make banding impractical, tie wire shall be used. The butt edge surfaces of all segments and block sections of the insulation shall be buttered with approximately 1.6mm coating of joint sealer prior to application. All voids shall be filled with glass fibre. Vertical contraction shall be provided by installing glass fibre in the space below the support ring and covering with additional insulation.

Insulation on all horizontal vessels, tubular equipment and other cold equipment surfaces shall be secured in place with bands on approximately 300mm centers. Where irregular surfaces make banding impractical, tie wire shall be used. The butt edge surfaces of all segments and block sections of the insulation shall be buttered with 1.6mm coating of joint sealer prior to application. All voids shall be filled with mineral wool insulation.

Heads on vessels and tubular equipment shall be insulated with blocks. The butt edges of all segments shall be buttered with approximately 1.6mm coating of joint sealer and segments secured with bands attached to a floating ring in the center and to a stainless steel band installed at the tangent point of

the vessel head. Band spacing shall be 300mm maximum at the circumference of the vessel.

All insulated surfaces shall be weatherproof with a metal jacket. Metal jacketing over the top of any piece of equipment or vessel shall overlap the wall jacket so as to shed water.

7.1.5 VAPOUR BARRIERS

All vapor barriers shall be applied as a minimum of two coats of contrasting colors. Glass cloth shall be imbedded into the first layer whilst still wet. Following the manufacturer's recommended drying time, the second coat shall be applied to the appropriate wet film thickness. No glass mesh shall be visible after the application of the second layer.

Vapor barriers shall be applied as soon as practicable following the application of the insulating material to ensure the insulating material is kept dry.

Self-tapping screws shall not be used on metal jacketing for IL and IC services to prevent puncture of the vapor barrier. Pop rivets with a metal backing strip shall be used on insulation classes requiring a vapor barrier.

7.2 INSTALLATION OF HIGH TEMPERATURE INSULATION (CLASS H)

7.2.1 GENERAL

Insulation shall be applied after all pipe welds have been inspected and pressure tested, and the piping or equipment has been painted in accordance with the relevant Project Specification.

Insulation on equipment and piping shall be stopped far enough from flanges or mechanical joints to permit the removal of bolts without damage to the insulation. Insulation near the flanges or mechanical joints shall be beveled at 45^0 & weatherproofed.

Insulation manufacturers' installation recommendations shall be followed. In the event of conflict between any manufacturer's recommendations and this Specification, the former shall govern.

Piping, vessels and equipment insulation thickness shall be as shown in Section 6.

7.2.2 PIPING APPLICATION

Single thickness sectional pipe insulation shall be applied with longitudinal joints staggered and shall be secured with wire ties on no more than 230mm centers. The insulation shall be applied with the joints tight and with all cracks and voids filled with insulating cement.

Screwed and welded fittings DN40 and smaller shall be insulated with insulating cement applied in 12mm layers to a thickness equal to that of the insulation on adjacent piping or preformed or mitered sectional pipe insulation, securely wired in place. Fittings DN50 and larger shall be insulated with preformed or mitered sectional pipe insulation, securely wired in place. Weatherproofing shall extend a minimum of 80mm under the adjacent pipe weatherproof jacketing joints between cement and jacketing shall be sealed with mastic to prevent water ingress.

Vertical piping shall include insulation supports at a maximum of 3m intervals. The material for the support ring shall be identical, or compatible to the material of the equipment to which they are attached in order to prevent galvanic corrosion.

Straight portions of insulated lines shall have metal jackets. All joints shall be lapped at least 80mm and arranged to shed water. The jacket shall be secured with bands on no more than 230mm centers. A band shall be applied over each circumferential lap joint.

Fittings DN50 and larger shall be covered with pre-formed metal jackets.

Where insulation is required around flanged joints in piping or vessel nozzles, the flanges shall be encased in an insulation-lined box as shown attached. Drainage shall be provided from the base of the box to provide indication of leakage. The Supplier shall ensure leakage of heat transfer fluid will not drain onto walkways, platforms or ladders.

7.2.3 VESSEL & EQUIPMENT APPLICATION

For vessels and tubular equipment DN610 and smaller, single-layer or preformed pipe insulation and cement shall be used as above. For larger diameter vessels and tubular equipment, blanket insulation shall be used.

Where the insulation thickness requirement (as shown in Section 6) exceeds 80mm, the insulation shall be applied in not less than two layers.

Blanket insulation on vertical vessels shall be applied with stagger joint arrangement. Top and bottom edges shall be securely tied over support rings with wire at no more than 300mm centers. Vertical and intermediate horizontal seams shall be laced together with gauge wire or hog rings at no more than 300mm centers. The insulation shall then be secured in place with bands spaced on no more than 300mm centers. Nozzle projections through insulation shall be adequately insulated.

Blanket insulation on horizontal vessels heaters and exchangers shall be applied in a staggered joint arrangement with all edges securely laced together with wire or hog rings at no more than 300mm centers. Nozzle projections through insulation shall be adequately insulated. Further securing shall be with bands spaced at no more than 300mm centers.

Heads of all vessels and tubular equipment shall be covered with preformed or segmented metal jackets. If a surface is so irregularly shaped that it cannot be jacketed, it shall have a topcoat of weather proofing mastic. Total finish coat shall be a minimum of 3mm thick when dry. Weatherproofing shall extend a minimum of 80mm under the adjacent jacketing.

Heavy fillets of mastic shall be applied to all corners and crevices where water is likely to collect. Mastic shall also be used as flashing at all possible sources of moisture penetration, such as intersections of insulation, nozzles and other protrusions through the surface coating.

Straight shells of vertical vessels with diameters over DN610 shall be weatherproofed with metal jacketing as follows:

- Securing of the jacket shall be with banding located over every circumferential lap of the jacket and on 300mm maximum centers. When expansion springs are required, the same number of expansion springs per band shall be used on all banding securing the jacket.

- Corrugated sheets shall be applied with the corrugations positioned vertically with the vertical seams lapped a minimum of two corrugations and the horizontal seams lapped a minimum of 80mm, arranged to shed water.
- Corrugated sheets shall be supported at the horizontal laps with stainless steel S-clips.

Straight shells of vertical vessels DN610 and smaller and all horizontal vessels and exchangers shall be weatherproofed with metal jacketing as follows:

- Securing of jacketing shall be with banding located over girth seams and on no more than 300mm centers.

8.0 INSPECTION, TESTING & CERTIFICATION

8.1 QUALITY ASSURANCE

The contractor shall develop QA/QC procedures for the work, which shall include the inspection of all materials, preparatory works and application, before commencement, during progress and after completion of the insulation work.

Inspection shall be carried out after completion of any one stage and before commencement of the following stage.

In progress fabrication and installation checks shall be conducted at various fabrication and installation phases, starting from material checks to final performance checks.

For foamed-in-place insulation, the Supplier shall utilize control sheets for each pipe spool in order to assess the step-by-step inspection status on a continuous basis.

8.2 INSPECTION OF MATERIALS

Inspection of materials shall be made either at the supplier's work or in the field.

Laboratory test results for various insulating materials carried out by independent authorities must be available prior to commencement of the work together with the "Site Instruction Manual" complied by Supplier.

A "Compliance Certificate" shall be prepared in case of various production batches to certify that the materials are in accordance with the technical specifications of the first production batch.

8.3 PRE-INSULATION INSPECTION

Equipment and piping surfaces shall be clean and dry and coated prior to insulation installation.

Equipment and piping shall be hydrostatically tested prior to insulation installation.

Hangers and supports must be properly located and free from obstruction to allow sufficient space for support insulation application and normal expansion/contraction of the system.

Positions for installation of the expansion/contraction joints in the insulation shall be clearly defined and marked.

Heat tracing, electrical and all wiring tubing for instrumentation shall be installed, tested and accepted before insulation installation.

8.4 FINAL INSPECTION & RELEASE

Final inspection shall be conducted by all the parties involved at the point when installation is considered complete or as soon as possible thereafter. An agreed warranty or official release shall be determined at that time.

The Supplier shall inspect the installation to determine that the insulation is of the proper thickness, that its materials, workmanship and finishes meet the specifications and that all the Sub-Supplier obligations have been met. Inspection checklists shall be completed and signed to record the inspection results.

Infrared inspection techniques may be used after start-up to verify the proper performance of the insulation system.

8.5 TESTING

For each batch of insulation supplied to the job site, the following tests have to be carried out a minimum of three times during the usage of this batch:

- Density as per ASTM D1622.
- Closed cells content as per ASTM D6226.
- Thermal conductivity as per ASTM C516 at 24°C mean temperature
- Compressive strength as per ASTM D1621
- Flammability in accordance with ASTM D3014

Results of the tests shall be recorded for two samples of foam from each batch of chemicals. Batches shall be identified by serial number and date.

9.0 APPLICATION DETAILS

Typical sketch are attached for following details

9.1 Pipe Insulation – Class H

9.2 Pipe Insulation – Class C

9.3 Termination of insulation on pipe work detail

9.4 Typical detail for un-insulated flanged valve class H insulation

9.5 Valve insulation class C

9.6 Vertical support for class cc insulation

9.7 Expansion/contraction joints

9.8 Insulated support for vertical insulated pipe

9.9 Typical detail of flanged joint class H

9.10 Vessel support, flashing & weatherproofing details – class H Insulation

9.11 Insulation support ring detail class H Insulations

9.12 Vessel support, flashing & weatherproofing details – class C Insulation

9.13 Typical Vessel nozzle flanged detail for class C insulation

9.14 Valve box cover construction

9.1 PIPE INSULATION – CLASS H

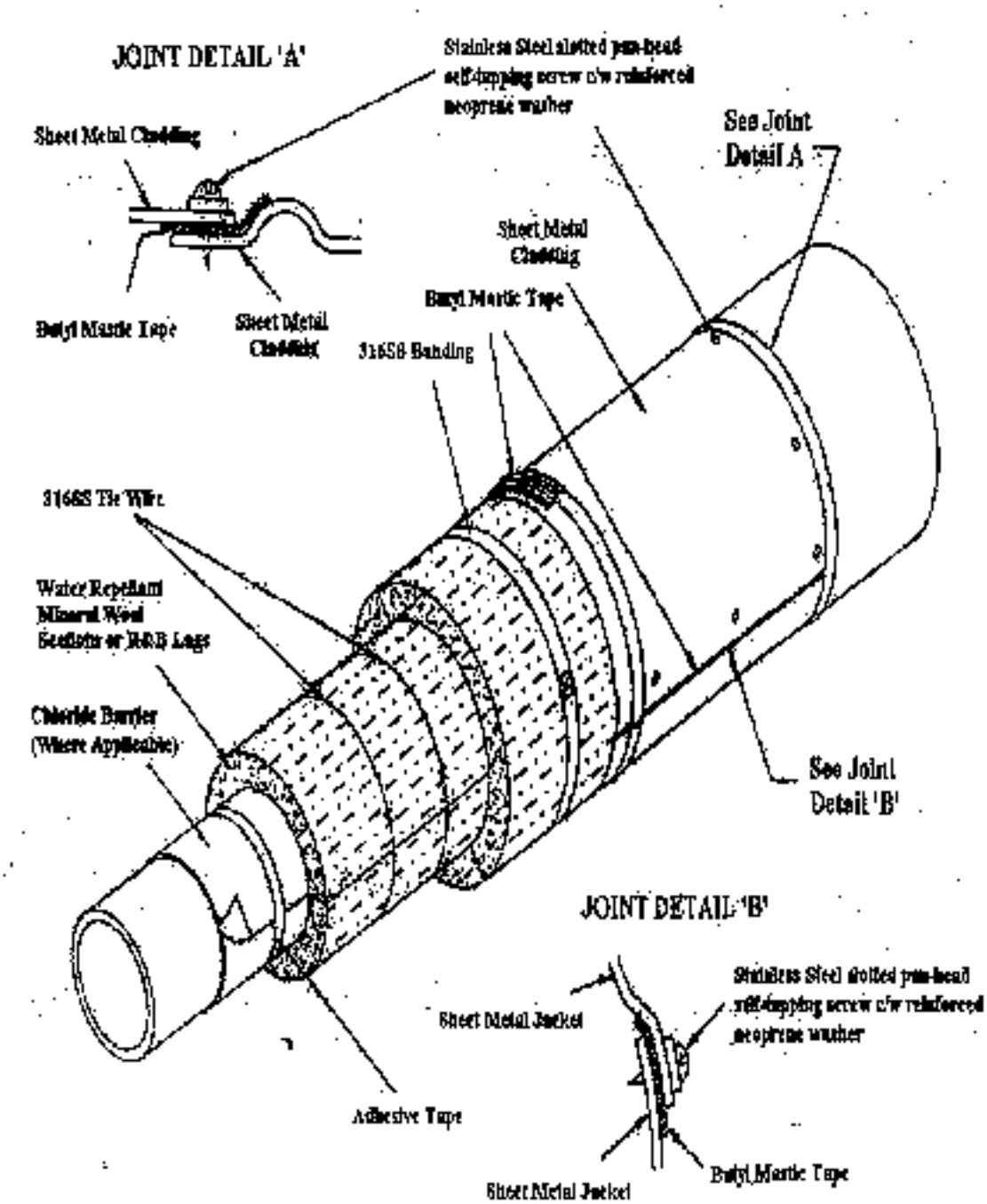

FIGURE 1 – Typical method of installing insulation for Class H

9.2 PIPE INSULATION – CLASS C:

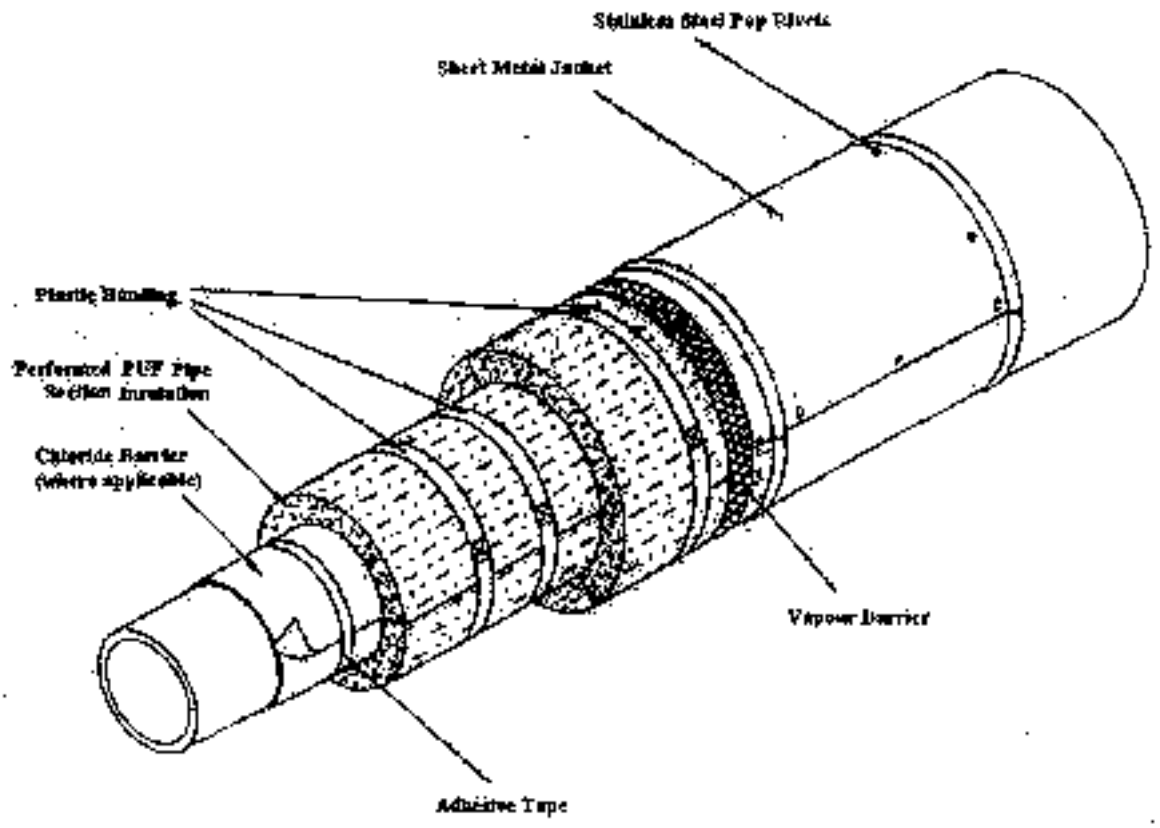

FIGURE 2 – Typical method of installing insulation for Class C

9.3 TERMINATION OF INSULATION ON PIPEWORK

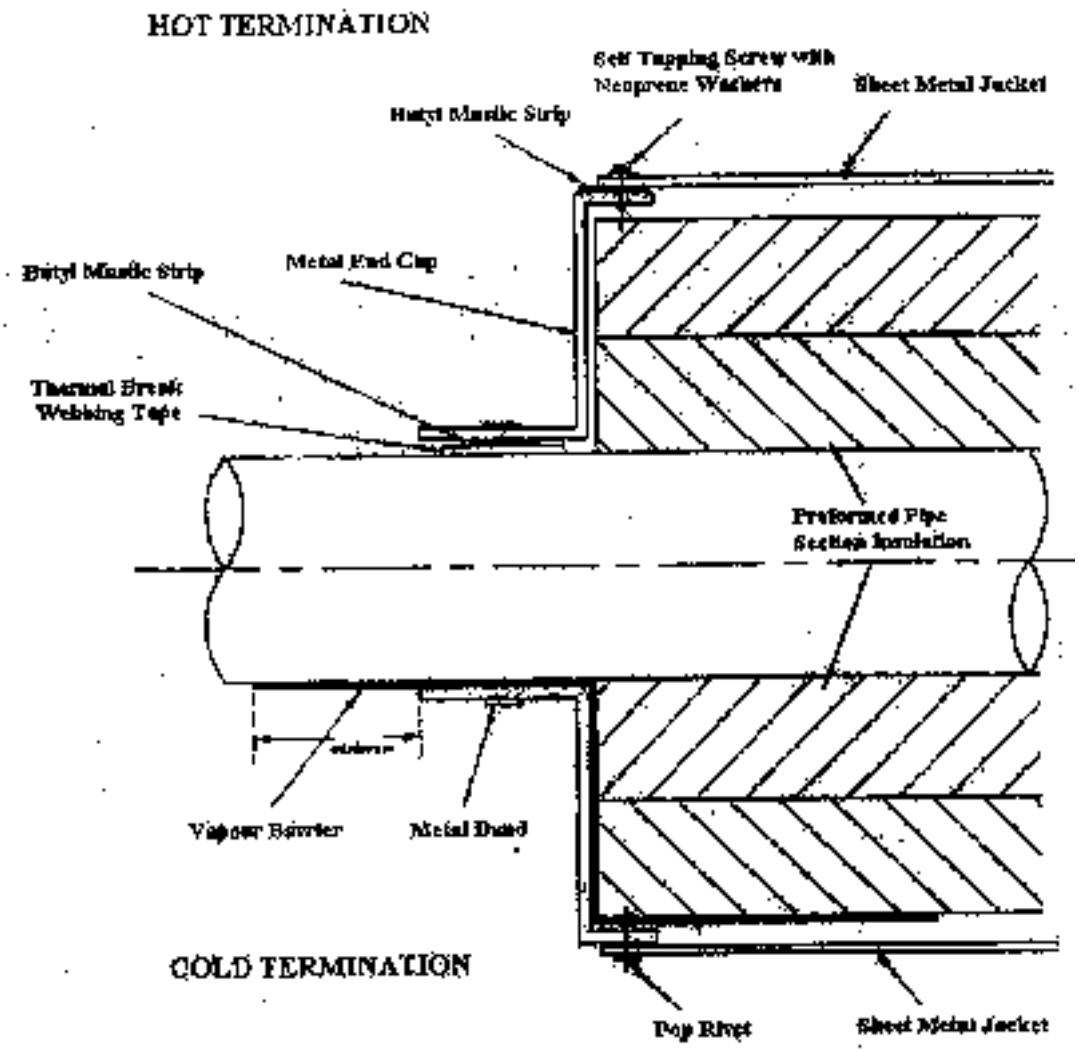

FIGURE 3 – Termination of insulation on pipework detail

9.4 VALVE INSULATION CLASS H:

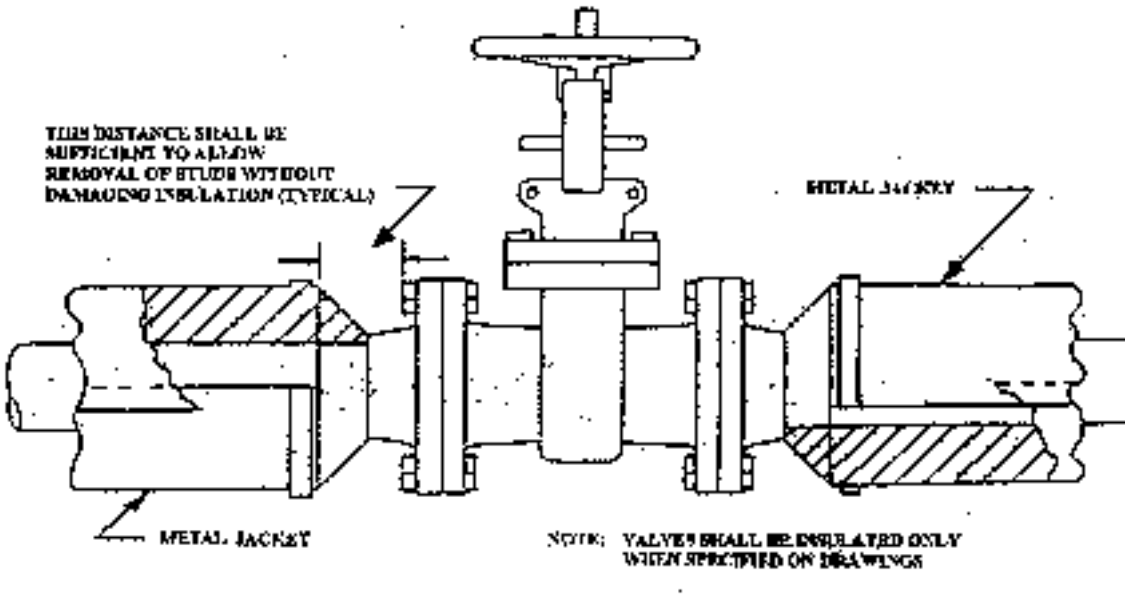

FIGURE 4 – Typical detail for uninsulated flanged valve Class H insulation

9.5 VALVE INSULATION CLASS C:

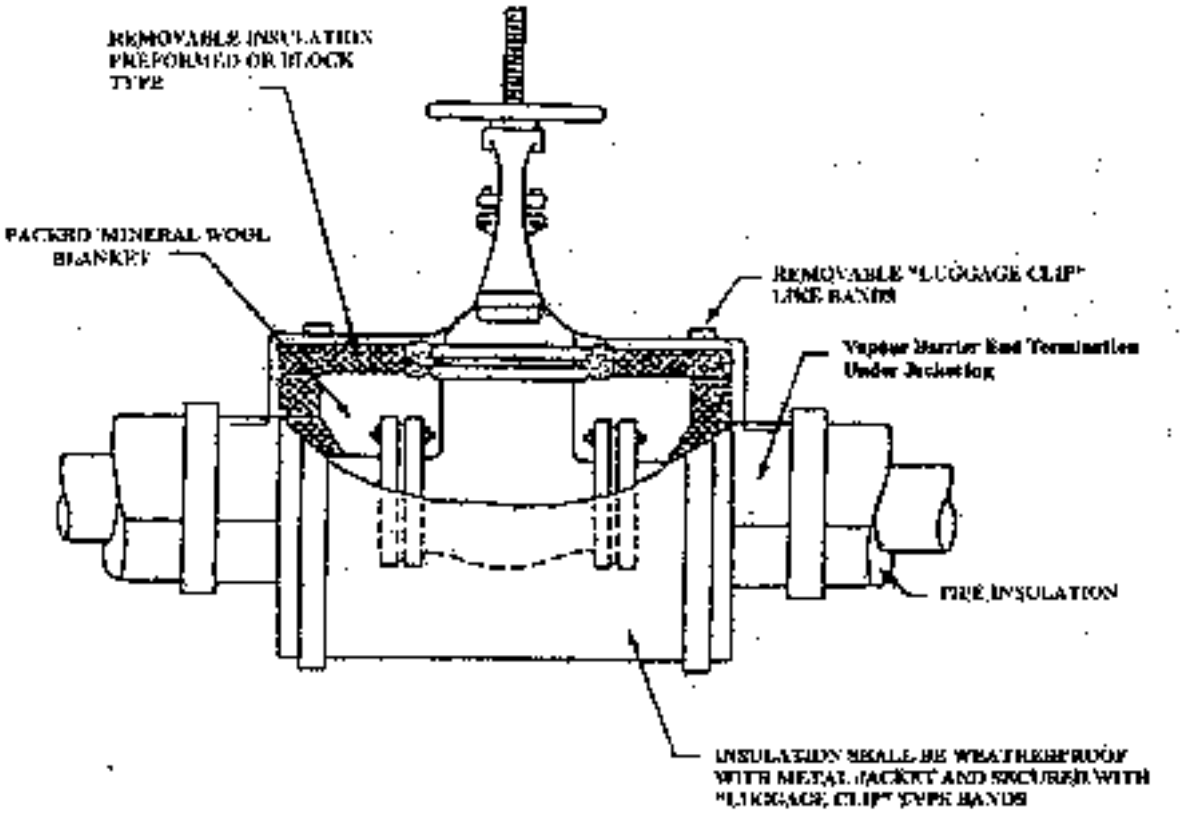

FIGURE 5 - Typical detail of insulated flanged valve for Class C insulation

9.6 VERTICAL SUPPORT FOR CLASS C INSULATION:

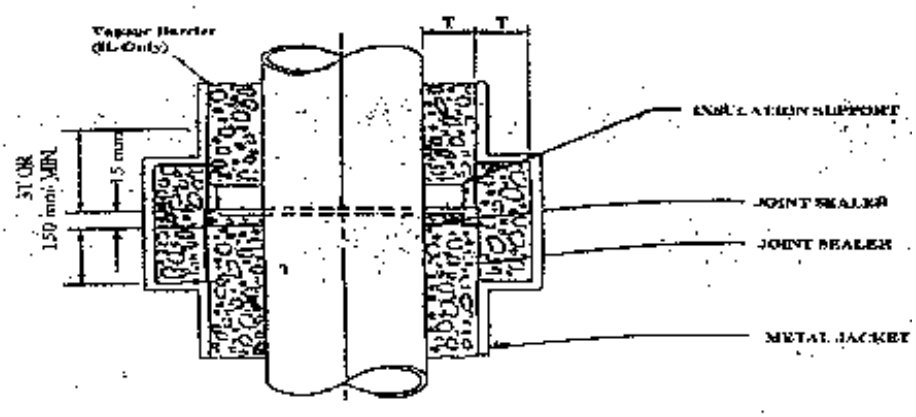

FIGURE 6 – Vertical support for Class C insulation

9.7 EXPANSION/CONTRACTION JOINTS

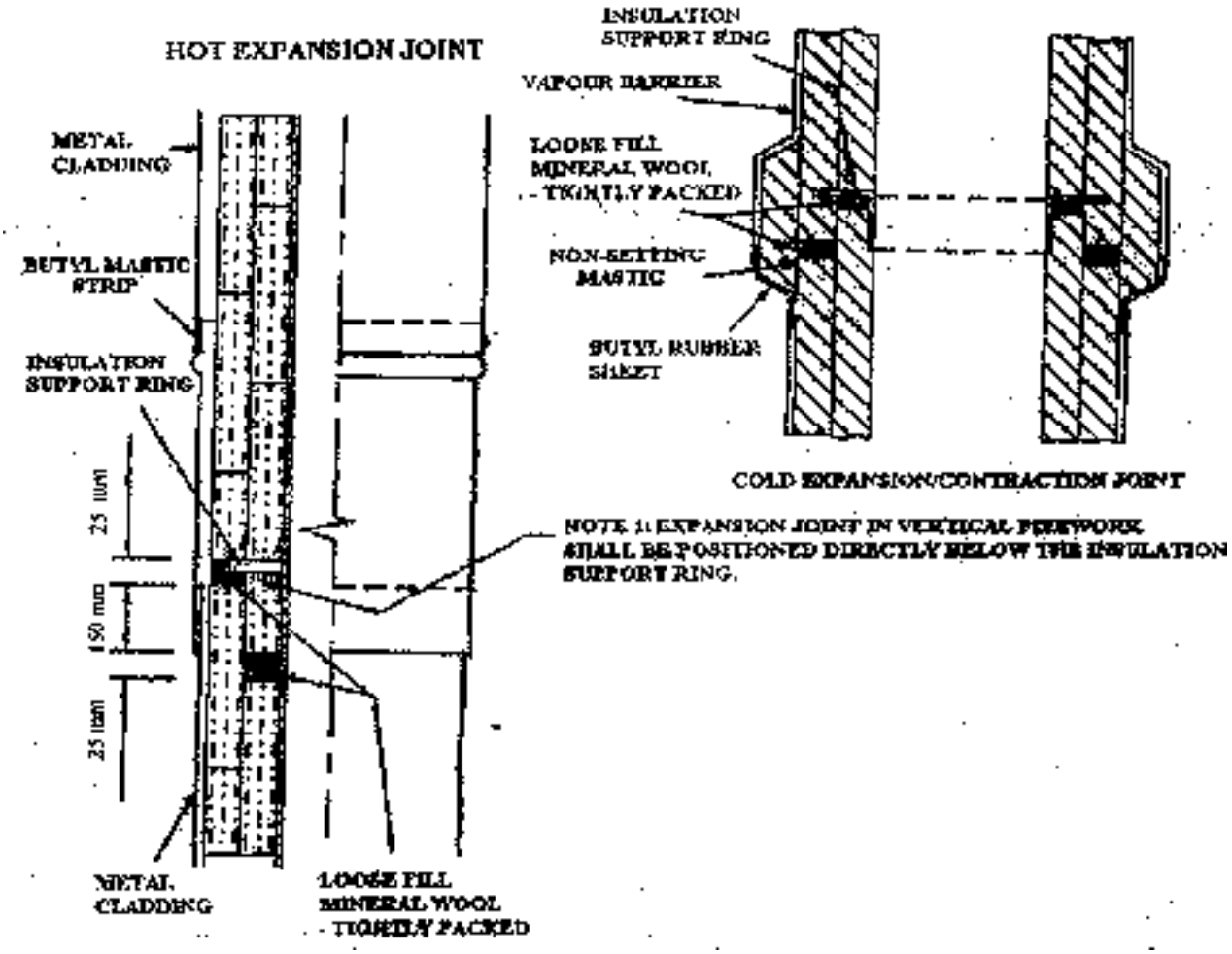

FIGURE 7 – Expansion/Contraction joints

9.8 INSULATED SUPPORTS FOR VERTICAL INSULATED PIPE:

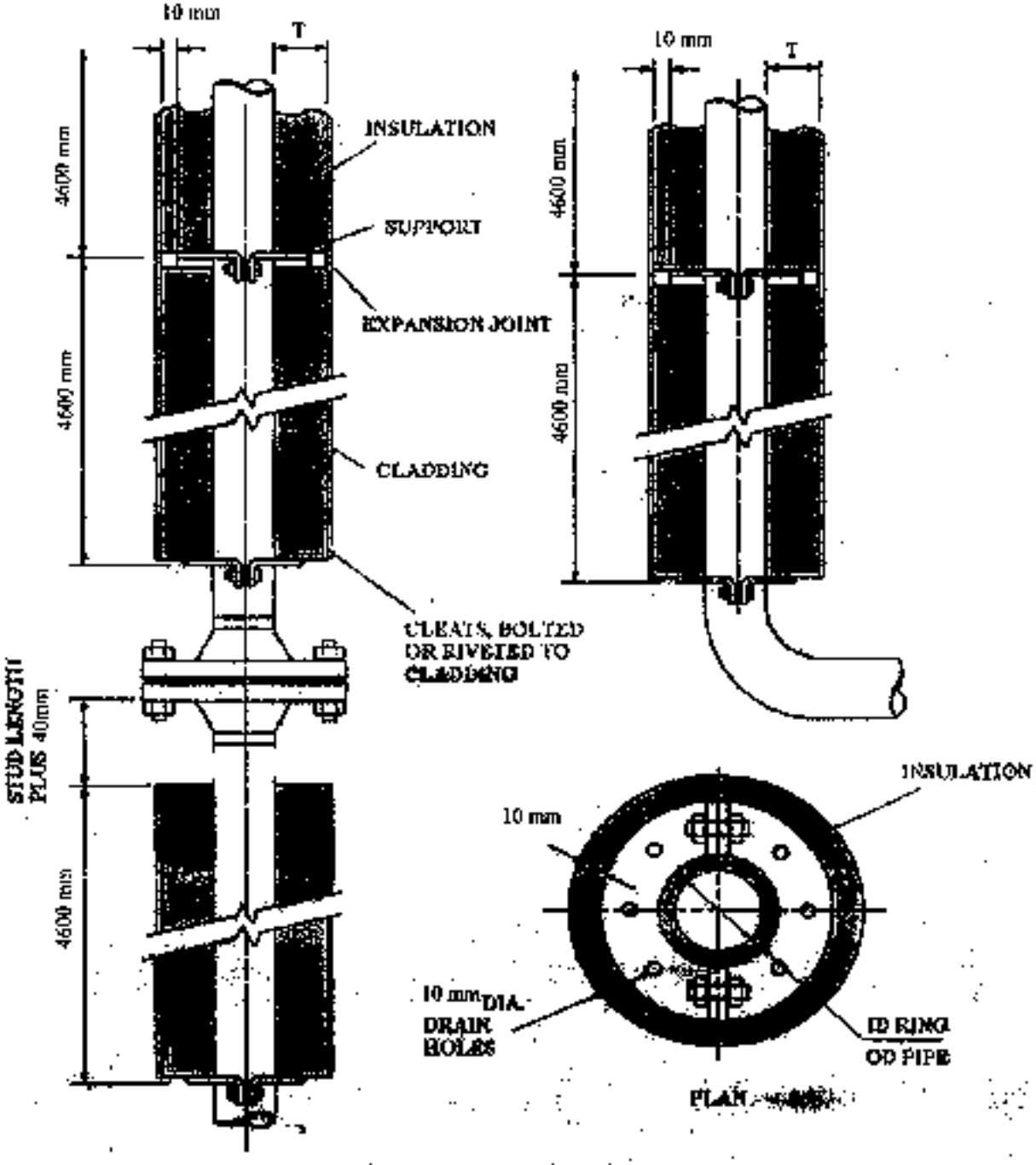

FIGURE 8 – Insulated supports for vertical insulated pipe

9.9 TYPICAL DETAIL FOR FLANGED JOINT CLASS H:

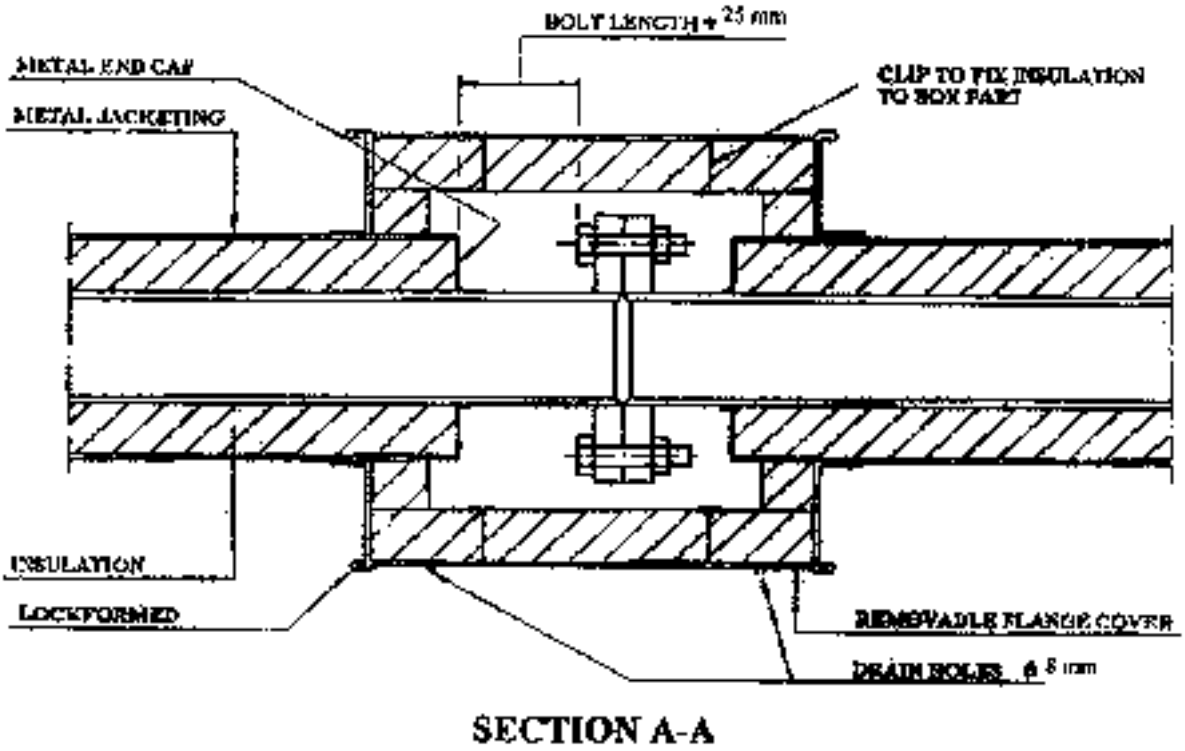

FIGURE 9 – Typical detail for flanged joint Class H

9.10 VESSEL SUPPORT, FLASHING & WEATHERPROOFING DETAILS – CLASS H INSULATION

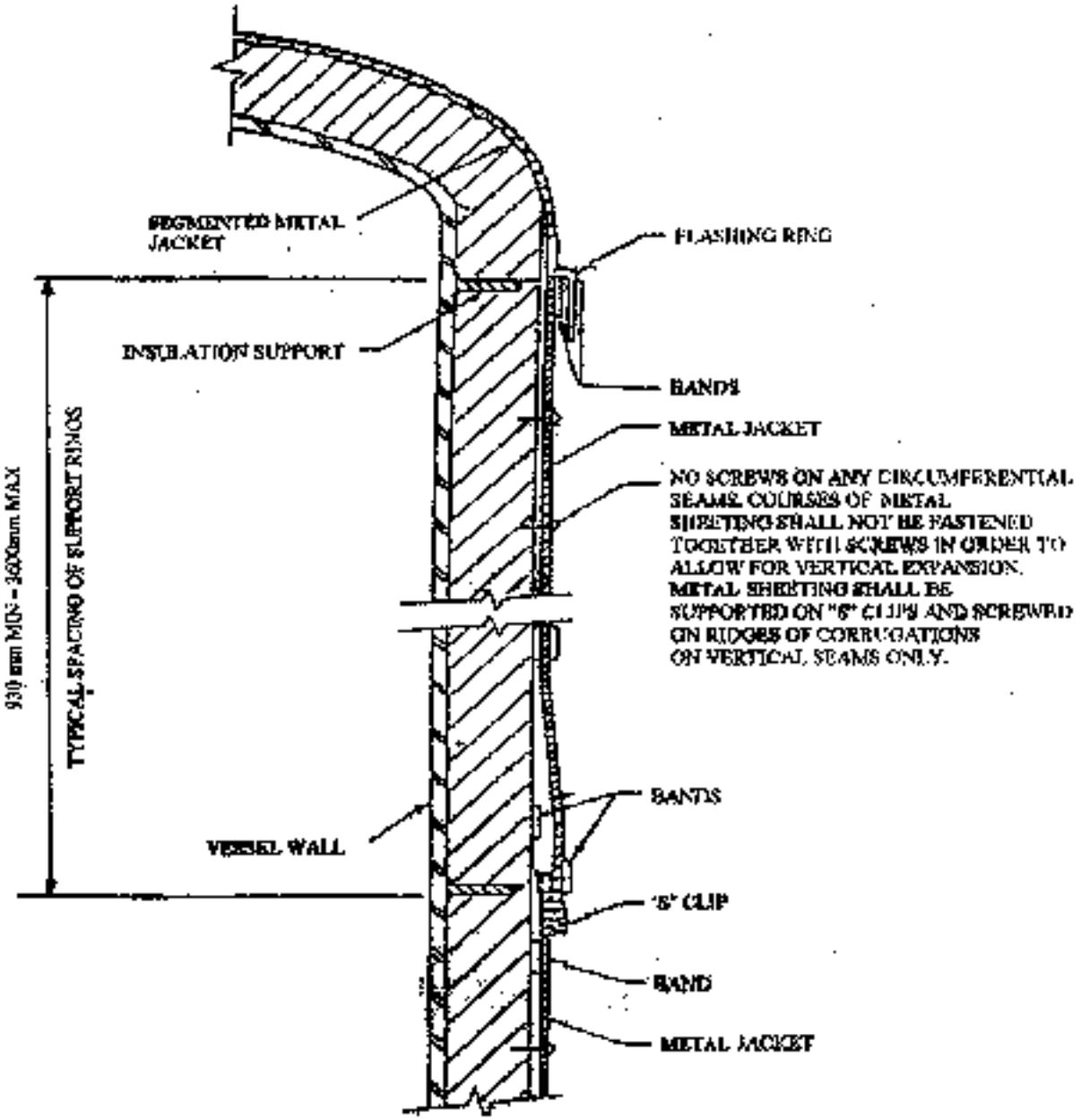

FIGURE 10 – Vessel support, flashing and weatherproofing details – Class H insulation

9.11 INSULATION SUPPORT RING DETAIL CLASS H INSULATION

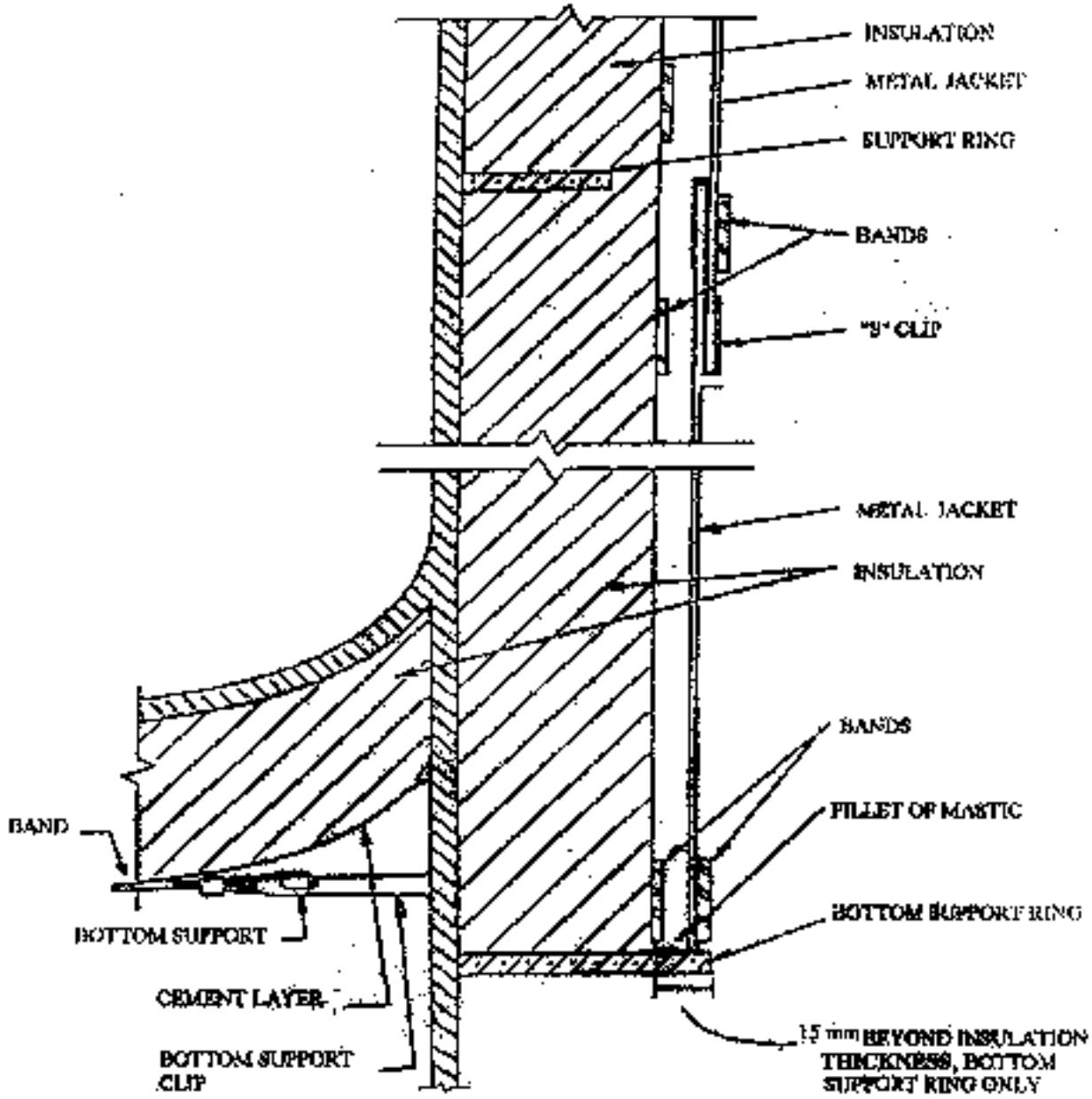

FIGURE 11- Insulation support ring detail Class H insulation

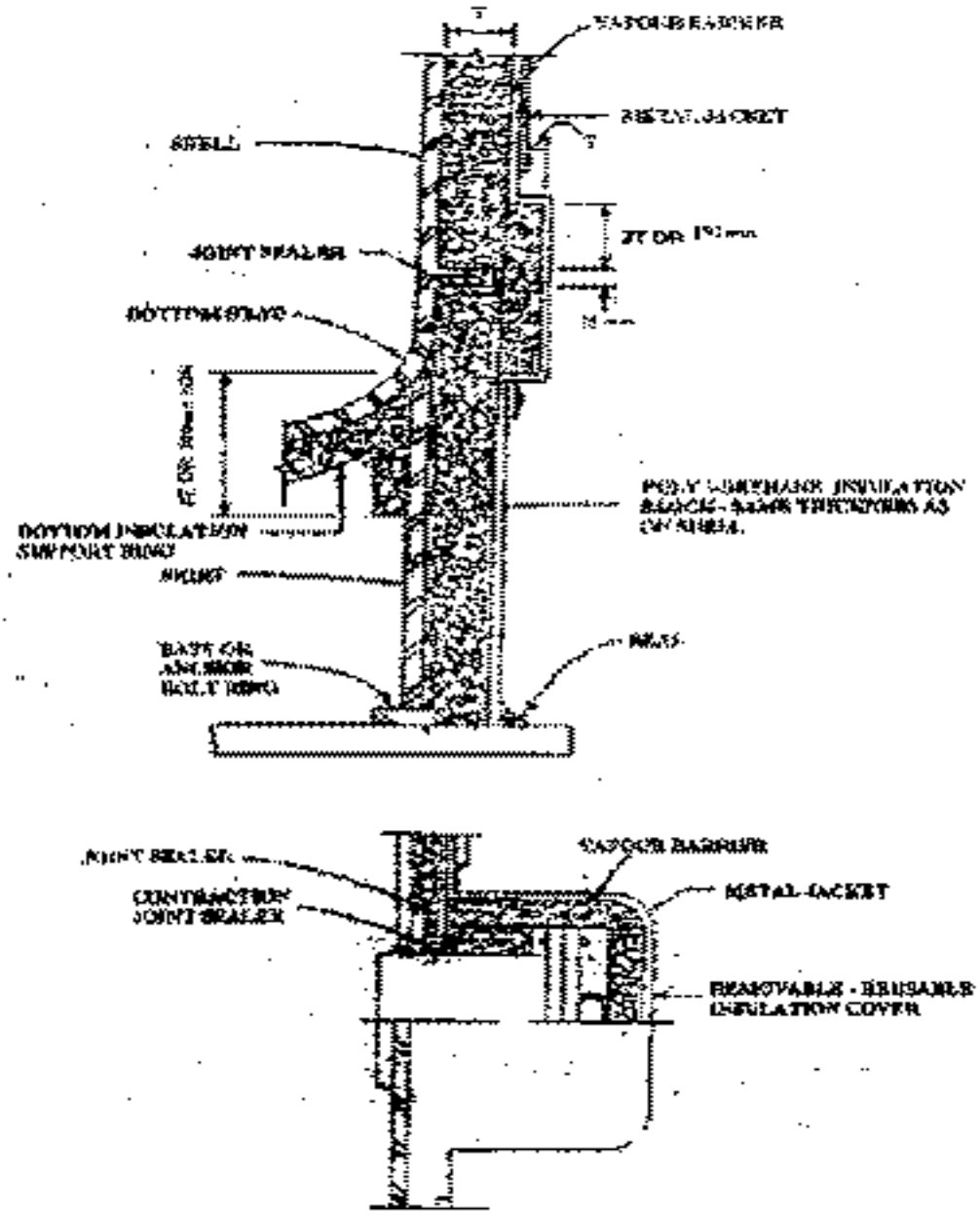

9.12 Vessel support, flashing & weatherproofing details Class C insulation (FIGURE 12)

9.13 TYPICAL VESSEL NOZZLE FLANGE DETAIL FOR CLASS C INSULATION

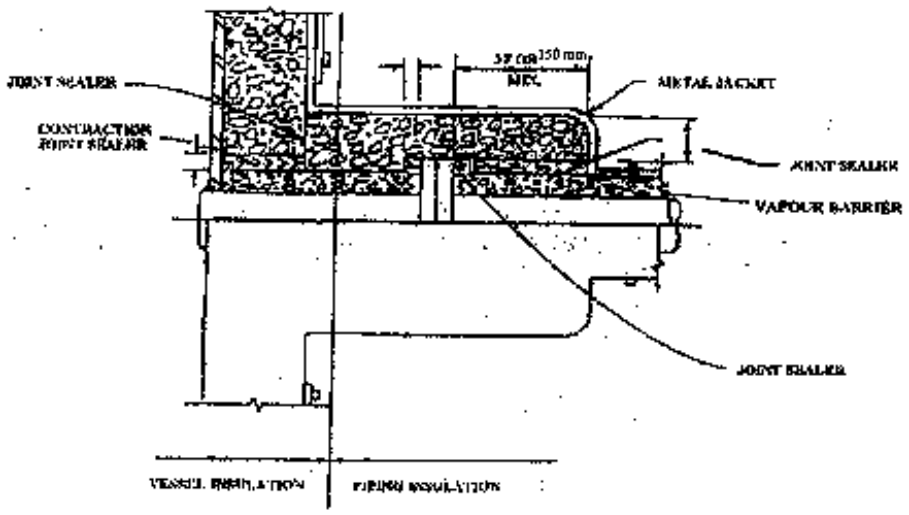

FIGURE 13 – Typical vessel nozzle flange detail for Class C insulation

9.14 VALVE BOX COVER CONSTRUCTION:

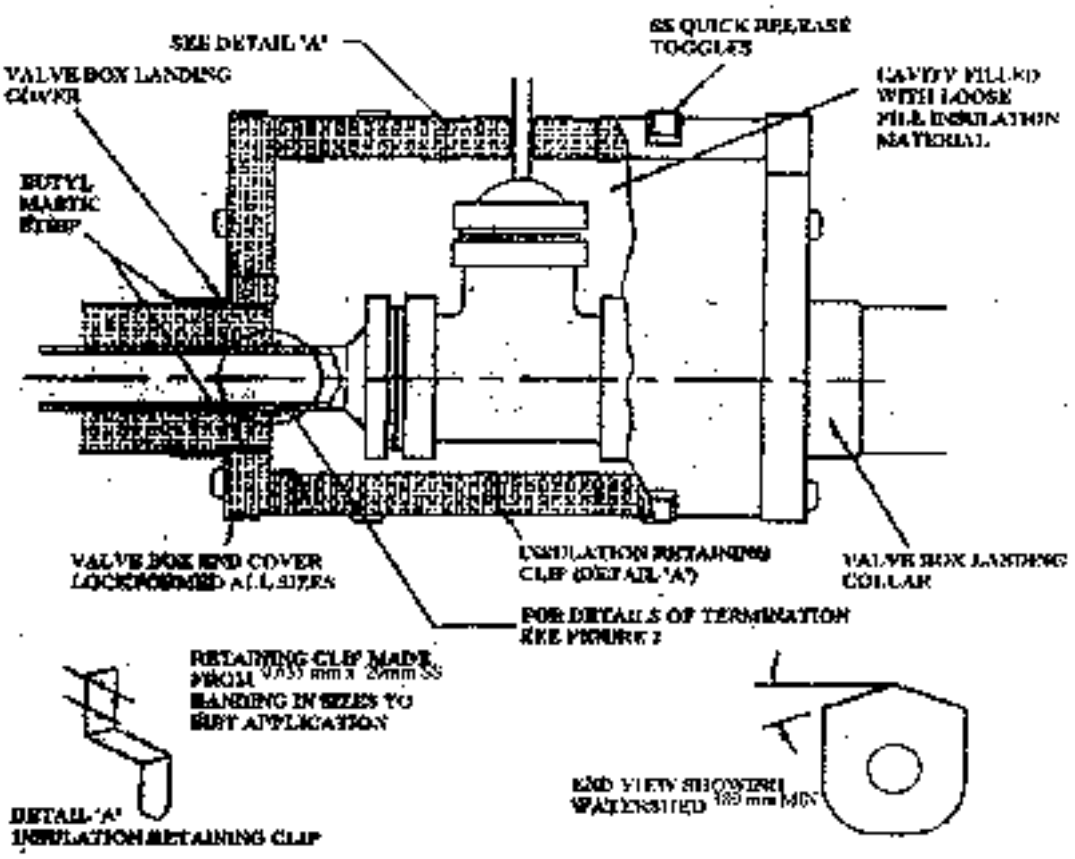

FIGURE 14 – Valve box cover construction

ओएनजीसी ONGC	OFFSHORE ENGINEERING SERVICES	FUNCTIONAL SPECIFICATION FOR INSULATION OF PIPING & EQUIPMENTS	Spec. No.	2006
			Rev. No.	3
			Discipline	PIPING
			Page: *45 OF 46*	

NOTES:-

1) DENSITY OF INSULATION FOR REMOVABLE PLUG AS FOLLOWING :-
   MINERAL WOOL 150kg/m^3
   CALCIUM SILICATE 250kg/m^3
   POLY URETHENFOAM 30-40kg/m^3
2) THICKNESS OF CLADDING SHALL BE AS FOLLOWS AL.- 22 SWG AND SS-24 SWG.
3) SCREWS FOR SECURING CLADDING SHALL BE OF SELF TOPPING TYPE WITH NEOPRENE WASHER UNDER THE HEAD.
4) BOLTS & NUTS OF THE REMOVABLE PLUG SHALL BE SAME MATERIAL AS THAT OF CLADDING.
5) T = PIPE WALL THICKNESS
6) t = THICKNESS OF INSULATION
7) W = WIDTH OF INSULATION PLUG
   (50mm FOR 't' < 50mm)
   (75mm FOR 't' < 50mm)
8) LOCATION AND NUMBERS OF REMOVABLE PLUG FOR INSPECTION POINT SHALL BE FIXED UP DURING DETAILED ENGINEERING.

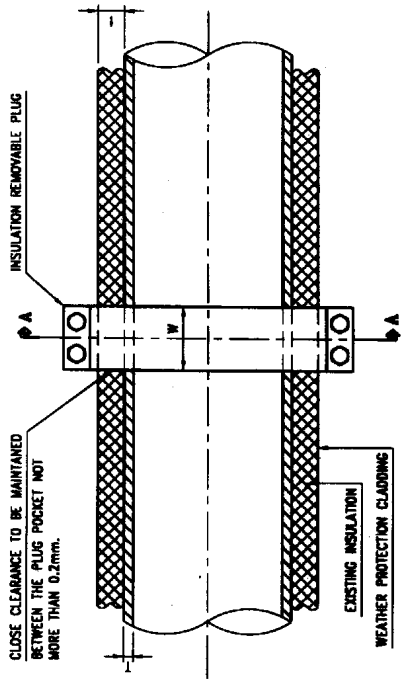

PIPE SECTION SHOWING INSULATION AND REMOVABLE PLUG

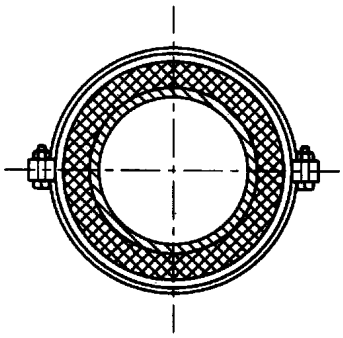

SECTION: A-A

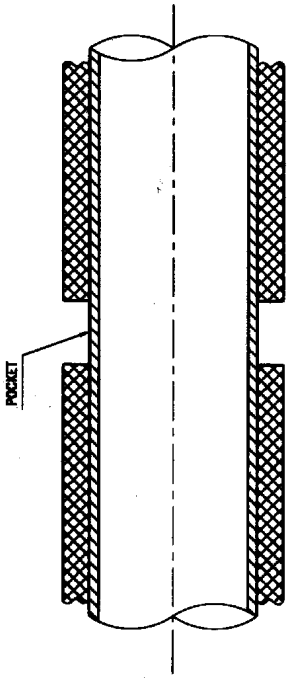

PIPE SECTION AFTER REMOVEL OF INSULATION PLUG

ओएनजीसी ONGC	OFFSHORE ENGINEERING SERVICES	FUNCTIONAL SPECIFICATION FOR INSULATION OF PIPING & EQUIPMENTS	Spec. No.	2006
			Rev. No.	3
			Discipline	PIPING
			Page: *46 OF 46*	

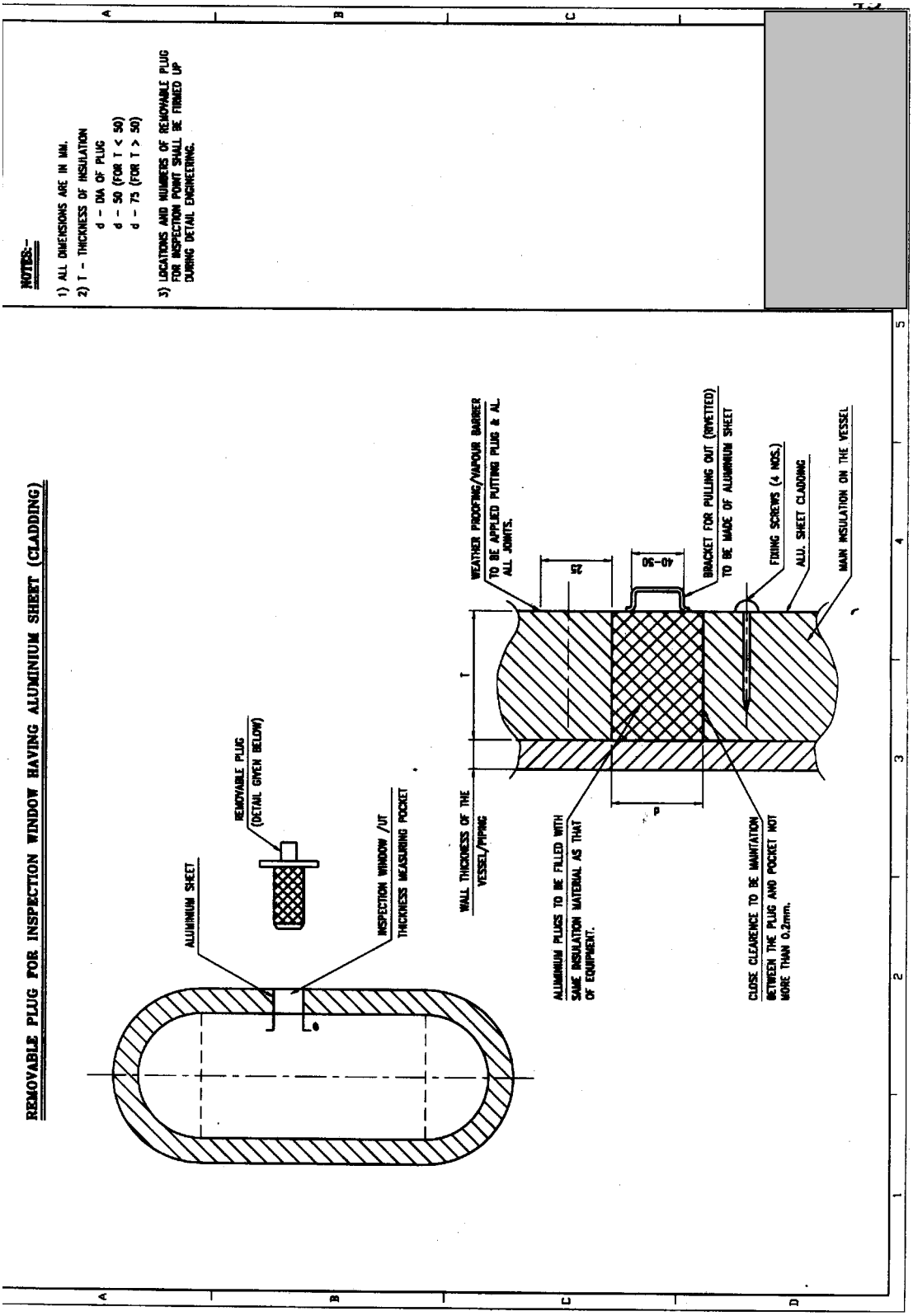

	Offshore Design Section Engineering Services IS0-9001:2000	Piping Material Specification	Specification No. 2008	
			Revision No.	3
			Discpilne:	Piping
			Page No. :	1

PIPING MATERIAL SPECIFICATION

PS	AKM	SJ	124	09-05-2016	3
PS	GJ	GRP	94	22-07-2009	2
PS	GJ	GRP	78	07-08-2008	1
PS	GJ	GRP	78	04-08-2008	0
Prepared By	Reviewed By	Approved By	Number of pages	Date	Revision No.

Formate No.	Ref. Proce. No.	Issue Number	Revision No.	Revision Date
ODS/SOF/004A	ODS/SOP/008 to 015	3	0	12-02-2008

	Offshore Design Section Engineering Services IS0-9001:2000	Piping Material Specification	Specification No. 2008	
			Revision No.	3
			Discpilne:	Piping
			Page No. :	2

Revision Status Record					
SL. No.	Material Specification	Revision No.	Date	Page No.	
				From	To
1	A1	2	15.01.16	7	8
2	B1	2	15.01.16	9	10
3	D1	2	15.01.16	11	12
4	E1	2	15.01.16	13	14
5	A2	1	15.01.16	15	16
6	B2	1	15.01.16	17	18
7	D2	1	15.01.16	19	20
8	E2	1	15.01.16	21	22
9	A1N	2	15.01.6	23	24
10	B1N	2	15.01.16	25	26
11	D1N	2	15.01.16	27	28
12	E1N	2	15.01.16	29	30
13	F1N	0	15.01.16	31	32
14	G1N	0	15.01.16	33	34
15	XG1	0	08.04.08	35	36
16	XG1N	0	08.04.08	37	38
17	A3	3	15.01.16	39	40
18	B3	3	15.01.16	41	42
19	D3	0	15.01.16	43	44
20	A4	0	08.04.08	45	46
21	A5	2	15.01.16	47	48
22	A6	1	15.01.16	49	50
23	A8	2	15.01.16	51	52
24	A9	1	22.07.09	53	54
25	B9	2	15.01.16	55	56
26	D9	0	15.01.16	57	58
27	E9	0	15.01.16	59	60
28	A10	0	08.04.08	61	62
29	B10	0	15.01.16	63	64
30	D10	0	15.01.16	65	66
31	E10	0	15.01.16	67	68
32	F10	1	03.05.16	69	70
33	A12	1	15.01.16	71	72
34	A13	1	15.01.16	73	74
35	A1LN	0	22.07.09	75	76
36	A22	0	22.07.09	77	78
37	B22	1	22.07.09	79	80
38	D22	2	15.01.16	81	82
39	E22	0	15.01.16	83	84
40	A23	2	15.01.16	85	86
41	B23	2	15.01.16	87	88
42	D23	2	15.01.16	89	90
43	E23	3	15.01.16	91	92
44	F23	0	15.01.16	93	94
45	G23	0	15.01.16	95	96
46	A15	0	22.07.09	97	98
47	B15	0	22.07.09	99	100
48	D15	1	22.07.09	101	102
49	E15	1	15.01.16	103	104
50	XG15	1	08.04.08	105	106
51	XH15	1	08.04.08	107	108
52	A15A	0	08.04.08	109	110
53	B15A	0	08.04.08	111	112

	Offshore Design Section **Engineering Services** **IS0-9001:2000**	**Piping Material Specification**	Specification No. 2008 Revision No. 3 Discpilne: Piping Page No. : 3

Revision Status Record					
SL. No.	Material Specification	Revision No.	Date	Page No. From	Page No. To
53	D15A	0	08.04.08	113	114
54	E15A	0	08.04.08	115	116
55	PE1	1	15.01.16	117	118
56	PB1N	0	15.01.16	119	120
57	PD1N	1	15.01.16	121	122
58	PE1N	1	15.01.16	123	124

Piping Specification Index

SL. No.	Material Specification	Class	Pipe Material	Corro.All. In mm
1	A1	# 150	Carbon steel-(CS)	3
2	B1	# 300	Carbon steel-(CS)	3
3	D1	# 600	Carbon steel-(CS)	3
4	E1	# 900	Carbon steel-(CS)	3
5	A2	# 150	Carbon steel-(CS)	1.5
6	B2	# 300	Carbon steel-(CS)	1.5
7	D2	# 600	Carbon steel-(CS)	1.5
8	E2	#900	Carbon steel-(CS)	1.5
9	A1N	# 150	Carbon steel NACE-(CS-NACE)	6
10	B1N	# 300	Carbon steel NACE-(CS-NACE)	6
11	D1N	# 600	Carbon steel NACE-(CS-NACE)	6
12	E1N	# 900	Carbon steel NACE-(CS-NACE)	6
13	F1N	#1500	Carbon steel NACE-(CS-NACE)	6
14	G1N	#2500	Carbon steel NACE-(CS-NACE)	6
15	XG1	API 5000	Carbon steel-(CS)	3
16	XG1N	API 5000	Carbon steel NACE-(CS-NACE)	6
17	A3	# 150	Carbon steel Galvanised-(CS-Galv.)/SS	1.5/Nil
18	B3	# 300	Carbon steel Galvanised-(CS-Galv.)/SS	1.5/Nil
19	D3	#600	Carbon steel Galvanised-(CS-Galv.)/SS	1.5/Nil
20	A4	# 150	Carbon steel Galvanised-(CS-Galv.)	1.5
21	A5	# 150	Copper Nickel(90/10 Cu-Ni)	Nil
22	A6	# 150	Stainless steel (SS 316L)	Nil
23	A8	# 150	Carbon steel Galvanised-(CS-Galv.)	3
24	A9	# 150	Stainless steel (SS 316)	Nil
25	B9	# 300	Stainless steel (SS 316)	Nil
26	D9	# 600	Stainless steel (SS 316)	Nil
27	E9	# 900	Stainless steel (SS 316)	Nil
28	A10	# 150	Stainless steel NACE(SS 316L-NACE)	1.5
29	B10	# 300	Stainless steel NACE(SS 316L-NACE)	1.5
30	D10	# 600	Stainless steel NACE(SS 316L-NACE)	1.5
31	E10	#900	Stainless steel NACE(SS 316L-NACE)	1.5
32	F10	# 2500	Stainless steel NACE(SS 316L-NACE)	1.5
33	A12	# 150	Titanium	Nil
34	A13	# 150	Copper(Cu)	Nil
35	A1LN	#150	LT CS - NACE	3mm
36	A22	# 150	Stainless steel (SS 316L)	Nil
37	B22	# 300	Stainless steel (SS 316L)	Nil
38	D22	# 600	Stainless steel (SS 316L)	Nil
39	E22	# 900	Stainless steel (SS 316L)	Nil
40	A23	# 150	Duplex Stainless steel-NACE (DSS-NACE)	Nil
41	B23	# 300	Duplex Stainless steel-NACE (DSS-NACE)	Nil
42	D23	# 600	Duplex Stainless steel-NACE (DSS-NACE)	Nil
43	E23	# 900	Duplex Stainless steel-NACE (DSS-NACE)	Nil
44	F23	#1500	Duplex Stainless steel-NACE (DSS-NACE)	Nil
45	G23	#2500	Duplex Stainless steel-NACE (DSS-NACE)	Nil

Note : During detail engineering, if it is observed that certain specification sheets are required as per approved P&ID but not included in this document, EPC contractor shall prepare the same based upon FS 2004A and submit it to company's review and approval.

	DESIGN DIVISION Engineering Services IS0-9001:2000	Piping Material Specification	Specification No. 2008	
			Revision No.	3
			Discpilne:	Piping
			Page No. :	5

Piping Specification Index

SL. No.	Material Specification	Class	Pipe Material	Corro.All. In mm
46	A15	#150	Incoloy 825 and Incoloy Cladding - NACE	Nil
47	B15	#300	Incoloy 825 and Incoloy Cladding - NACE	Nil
48	D15	#600	Incoloy 825 and Incoloy Cladding - NACE	Nil
49	E15	#900	Incoloy 825 and Incoloy Cladding - NACE	Nil
50	XG15	API 5000	Incoloy 825 and Incoloy Cladding - NACE	Nil
51	XH15	API 10000	Incoloy 825 and Incoloy Cladding - NACE	Nil
52	A15A	#150	Inconel 625 and Inconel Cladding - NACE	Nil
53	B15A	#300	Inconel 625 and Inconel Cladding - NACE	Nil
54	D15A	#600	Inconel 625 and Inconel Cladding - NACE	Nil
55	E15A	#900	Inconel 625 and Inconel Cladding - NACE	Nil
56	PE1	# 900	Carbon steel-(CS)	3
57	PB1N	# 300	Carbon steel NACE-(CS-NACE)	6
58	PD1N	# 600	Carbon steel NACE-(CS-NACE)	6
59	PE1N	# 900	Carbon steel NACE-(CS-NACE)	6

Note : During detail engineering, if it is observed that certain specification sheets are required as per approved P&ID but not included in this document, EPC contractor shall prepare the same based upon FS 2004A and submit it to company's review and approval.

1 Introduction

The piping material specifcation is prepared based upon Functional Specificastion FS 2004A and Piping Design Criteria. Datasheets attached here is minimum indicative piping thickness, Piping MOC, Fittings, gaskets and bolts etc. and EPC shall not construe it as firm piping material specification. The EPC contractor shall develope piping material specification and valve material specificaion and provide all supporting documents including piping wall thickness reports, material selection basis etc during detail engineering to company. Valve tag nos. indicated in the PMS is for referance only. Contractor shall prepare detail valve material specification based on FS 2004A and other relevent codes. Contractor shall reconfirm the tag nos. indicated in the Piping material Specification.

1.1 Order of precedance

The order of precedance for piping material specification shall be as follows in the order indicated:

i) Piping Design Criteria
ii) P&ID
iii) FS 2004 A (LATEST REV.)
iv) This Specification -PMS
v) Codes and standard

1.2 Genaral

All material shall conform to ASTM or BS standard. Design and fabrication shall be as per ASME B 31.3 for process piping and ASME B 31.4/31.8 liquid and gas transmission pipeline repectively for the piping of top side beyond top of transition bend.The EPC contractor shall also ensure that API Recommended practices (API 14E) Design and installation of offshore production platform piping system is adherred. In case of any conflict between FS 2004A and this document, FS 2004A shall prevail.

1.2.a During detail engineering, if it is observed that certain specification sheets are required as per approved P&ID but not included in this document, EPC contractor shall prepare the same based upon FS 2004A and submit it to company's review and approval. Piping and Valve material specification for non-matellic piping is not included in this document and contractor shall prepare the same based upon vendor information as per manufacturer standard.

1.3 Contractor's Responsibility

The piping and valve material specification prepared by EPC contractor shall necessarily include all the minimum information required by vendor for procurement of piping material. EPC shall prepare Piping material and valve material specification based on FS 2004A,FS 2004B,FS2004D and Piping Design Criteria.

All the piping, piping component and piping speciality shall be painted in accordance with FS 2005 latest revision.

All the piping, piping component and piping speciality shall be insulated in accordance with FS 2006 latest revision.

All the piping, piping component and piping speciality shall be insulated in accordance with FS 2006 latest revision.

All type of welding and NDT in piping, piping component, piping specillaity and supports shall be in accordance with FS 2009 latest revision

Offshore Design Section Engineering Services IS0-9001:2000	PIPING MATERIAL SPECIFICATION				Sheet No.	1 of 2
	Piping Class	Material	C.A	Spec.No	Revision:2	
	A1 # 150	CS	3mm	2004A,Rev 9	Page No.	7
	Design Code:	**ASME B 31.3**				
	Service:	Vent Gas (VG), Blow Down(BD),Process Hydro Carbon Drain (DH),Nitrogen(N),Chemical (C), Water Injection(WI),Process Drain Water(DW),Diesel Fuel(DF), Hydrocarbon Liquid and Vapour with low CO2 AND H2S.				

Pipe Data	ASME B 36.10																
Size(in)	0.5	0.75	1	1.5	2	3	4	6	8	10	12	14	16	18	20	22	24
O.D.mm	21.3	26.7	33.4	48.3	60.3	88.9	114.3	168.3	219.1	273.1	323.9	355.6	406.4	457.2	508	558.8	609.6
Sch.	XXS	160	160	160	XS	80	80	80	Std	Std	Std	Std	Std	Std	20	20	20
WTmm	7.47	5.56	6.35	7.14	5.54	7.62	8.56	10.97	8.18	9.27	9.52	9.52	9.52	9.52	9.52	9.52	9.52
M.T (%)	12.5	12.5	12.5	12.5	12.5	12.5	12.5	12.5	12.5	12.5	12.5	12.5	12.5				
TYPE	Seamless													LSAW with 100% Radiography, Note-7			
MOC	ASTM A 106 Gr. B													API 5L Gr. B			
Ends	PE				BE												
Fittings Data																	
Size(in)	0.5	0.75	1	1.5	2	3	4	6	8	10	12	14	16	18	20	22	24
TYPE	Socket Weld				Butt Weld												
Rating	# 9000	# 6000			XS	80	80	80	Std	Std	Std	Std	Std	Std	20	20	20
MOC	ASTM A 105 U.N.O				ASTM A 234 Gr. WPB, Seamless U.N.O									ASTM A234 Gr.WPB,Welded U.N.O			
Elbow	ASMEB16.11				ASME B 16.9									ASME B 16.9			
Tee	ASMEB16.11				ASME B 16.9									ASME B 16.9			
Red.	ASMEB16.11				ASME B 16.9									ASME B 16.9			
Cap	ASMEB16.11				ASME B 16.9									ASME B 16.9			
Coupl	ASMEB16.11				ASME B 16.9									ASME B 16.9			
Plug	ASMEB16.11				ASME B 16.9									ASME B 16.9			
Union																	
Elbowlet	MSS SP 97,ASTM A 105				MSS SP 97,ASTM A 105									MSS SP 97,ASTM A 105			
Sockolet	MSS SP 97,ASTM A 105				MSS SP 97,ASTM A 105									MSS SP 97,ASTM A 105			
Weldolet	MSS SP 97,ASTM A 105				MSS SP 97,ASTM A 105									MSS SP 97,ASTM A 105			
Nipple	MSS SP 97,Same as pipe				MOC Same as pipe									MOC Same as pipe			
Swage	MSS SP 95,Same as pipe				MSS SP 95,MOC Same as pipe									MSS SP 95,MOC Same as pipe			
Flange																	
Size(in)	0.5	0.75	1	1.5	2	3	4	6	8	10	12	14	16	18	20	22	24
TYPE	SW				WN												
MOC	ASTM A 105				ASTM A 105												
FACE	RF-Serrated Finished				RF, Serrated Finished												
STD.	ASME B 16.5				ASME B 16.5, But welding ends as per ASME B 16.25												
Spectacle Blind/Spacer Blinds																	
Size(in)	0.5	0.75	1	1.5	2	3	4	6	8	10	12	14	16	18	20	22	24
MOC	ASTM A 105																
Spectacle	ASME B 16.48				ASME B 16.48							Spacer and blind as per ASME B 16.48					
Mechanical Joints																	
Stud Bolts	ASTM A 193 Gr. B7				ASTM A 193 Gr. B7												
Hex Nuts	ASTM A 194 Gr. 2H				ASTM A 194 Gr. 2H												
Gasket	ASME B 16.21,Flat Ring,1.58mm,CNAF				ASME B 16.21,Flat Ring,1.58mm,CNAF												

Pressure-Temperature Rating				Maximum Hydrostatic Pressure	
Temp.,Deg F	Pressure, PSI	Temp,Deg C	Pressure, Kg/cm2	Pressure, psig	Pres.,Kg/cm2g
(-) 4 to 100	285	(-) 20 to 38	20	450 psig	31.6 Kg/cm2
200	260	93	18.3	Limited by Flange considereing flange as the weakest joint in piping system.	
300	230	149	16.2		
400	200	204	14.1		
500	170	260	11.9		

Notes Releted to Pipe,Fittings,Flanges,Gasket and Stud Bolts -Nuts

1. Welded fittings shall be 100% radiographed.
2.All alloy steel stud bolts and nuts shall be hot dip galvanized or electrogalvanized with minimum coating as per spec.
3. Spectacle blinds and spacer sizes and rating that are not available in ASME B 16.48 shall be as per manufacturer standard. Design shall be submitted to company for review and approval.
4. All pipe thread shall be as per ASME B 1.20.0
5. PMS to be read in conjuction with FS 2004 A.
6. Two jackscrew, 180 degree apart shall be provided in one of the flanges for all orifice flange and speciifed spectacle blind assemblies.
7. Weld Joint Factor for welded pipe shall be as per ASME B 31.3

Offshore Design Section Engineering Services IS0-9001:2000	PIPING MATERIAL SPECIFICATION				Sheet No.	2 of 2
	Piping Class		Material	C.A	Spec.No	Revision:2
	A1	# 150	CS	3mm	2004A,Rev 9	Page No. 8
	Design Code:		**ASME B 31.3**			
	Service:	Vent Gas (VG), Blow Down(BD),Process Hydro Carbon Drain (DH),Nitrogen(N),Chemical (C), Water Injection(WI),Process Drain Water(DW),Diesel Fuel(DF), Hydrocarbon Liquid and Vapour with low CO2 AND H2S.				

Branch Table as per API RP 14E

Run Pipe	≤ 1	1-1.5	2	3	4	6	8	10	12	14	16	18	20	24	30
≤ 1	T														
1-1.5	T	T													
2	*	*	T												
3	*	*	T	T											
4	*	*	T	T	T										
6	*	*	W	T	T	T									
8	*	*	W	W	T	T	T								
10	*	*	W	W	W	T	T	T							
12	*	*	W	W	W	T	T	T	T						
14	*	*	W	W	W	W	T	T	T	T					
16	*	*	W	W	W	W	T	T	T	T	T				
18	*	*	W	W	W	W	W	T	T	T	T	T			
20	*	*	W	W	W	W	W	T	T	T	T	T	T		
24	*	*	W	W	W	W	W	W	T	T	T	T	T	T	
30	*	*	W	W	W	W	W	W	W	W	T	T	T	T	T

LEGEND	
*	Sockolet
W	Weldolet
T	TEE

	Branch Pipe															
Valve Data																
Size(in)	0.5	0.75	1	1.5	2	3	4	6	8	10	12	14	16	18	20	22	24
Gate Valve																	
TAG	VG 42,SW				VG 60,FLANGED												
Rating	# 800				# 150,RF												
Plug Valve																	
TAG																	
Rating																	
Ball Valve																	
TAG	VB 44,SW				VB 61, Lever Operated			VB 63, Gear Operated									
Rating	# 800				# 150, RF												
Globe Valve																	
TAG	VGL 42,SW				VGL 60												
Rating	# 800				# 150, RF												
Check Valve																	
TAG	VC 42,SW,Lift Check				VC 60,Swing Check/ VC 81 (Wafer Check, Note -1)												
Rating	# 800				# 150, RF												
Needle Valve																	
TAG	VN 3,SW																
Rating	# 800																
Butter Fly Valve																	
TAG					VBF 1(WAFFER)												
Rating					#150, RF												

Notes Releted to Valve and Brach Connection

1. Wafer check valve to be avoided as far as possible; unless the avaliable space constraint does not allow normal check valve . The contractor to take approvel for use of wafer check Valve during pipe routing after extablishing the space constraint.

2. Wafer type Butterfly Valve may be used only in fire water(Clean water) service.
3. PMS to be read in conjuction with FS 2004 A.
4. Maximum temperature limit for all Ball Valve shall be 121 Degree C

Revision	Date	Description	Prepared By	Reviewed By	Approved By
Revision:2	15.01.16	Issued For Bid	PS	AKM	SJ

Offshore Design Section Engineering Services IS0-9001:2000	PIPING MATERIAL SPECIFICATION				Sheet No.	1 of 2
	Piping Class		Material	C.A	Spec.No	Revision:2
	B1	# 300	CS	3mm	2004A,Rev 9	Page No. 9
	Design Code:		**ASME B 31.3**			
	Service: Vent Gas (VG), Blow Down(BD),Process Hydro Carbon Drain (DH),Nitrogen(N),Chemical (C), Water Injection(WI),Process Drain Water(DW),Diesel Fuel(DF), Hydrocarbon Liquid and Vapour with low CO2 AND H2S.					

Pipe Data	ASME B 36.10																
Size(in)	0.5	0.75	1	1.5	2	3	4	6	8	10	12	14	16	18	20	22	24
O.D.mm	21.3	26.7	33.4	48.3	60.3	88.9	114	168.3	219.1	273.1	323.9	355.6	406.4	457.2	508	558.8	609.6
Sch.	XXS	XXS	160	160	XS	80	80	80	60	60	80	40	40	40	40	40	40
WTmm	7.47	7.82	6.35	7.14	5.54	7.62	8.56	10.97	10.3	12.7	12.70	11.1	12.7	14.27	15.1	15.87	17.47
M.T (%)	12.5	12.5	12.5	12.5	12.5	12.5	12.5	12.5	12.5	12.5	12.5	12.5	12.5				
TYPE	Seamless													LSAW with 100% Radiography, Note-7			
MOC	ASTM A 106 Gr. B													API 5L Gr. B			
Ends	PE				BE												
Fittings Data																	
Size(in)	0.5	0.75	1	1.5	2	3	4	6	8	10	12	14	16	18	20	22	24
TYPE	Socket Weld				Butt Weld												
Rating	# 9000		# 6000		XS	80	80	80	60	60	80	40	40	40	40	40	40
MOC	ASTM A 105 U.N.O				ASTM A 234 Gr. WPB, Seamless U.N.O									ASTM A234 Gr.WPB,Welded U.N.O			
Elbow	ASMEB16.11				ASME B 16.9									ASME B 16.9			
Tee	ASMEB16.11				ASME B 16.9									ASME B 16.9			
Red.	ASMEB16.11				ASME B 16.9									ASME B 16.9			
Cap	ASMEB16.11				ASME B 16.9									ASME B 16.9			
Coupl	ASMEB16.11				ASME B 16.9									ASME B 16.9			
Plug	ASMEB16.11				ASME B 16.9									ASME B 16.9			
Union																	
Elbowlet	MSS SP 97,ASTM A 105				MSS SP 97,ASTM A 105									MSS SP 97,ASTM A 105			
Sockolet	MSS SP 97,ASTM A 105				MSS SP 97,ASTM A 105									MSS SP 97,ASTM A 105			
Weldolet	MSS SP 97,ASTM A 105				MSS SP 97,ASTM A 105									MSS SP 97,ASTM A 105			
Nipple	MSS SP 97,Same as pipe				MOC Same as pipe									MOC Same as pipe			
Swage	MSS SP 95,Same as pipe				MSS SP 95,MOC Same as pipe									MSS SP 95,MOC Same as pipe			
Flange																	
Size(in)	0.5	0.75	1	1.5	2	3	4	6	8	10	12	14	16	18	20	22	24
TYPE	SW				WN												
MOC	ASTM A 105				ASTM A 105												
FACE	RF-Smooth Finished				RF, Smooth Finished												
STD.	ASME B 16.5				ASME B 16.5, But welding ends as per ASME B 16.25												
Spectacle Blind/Spacer Blinds																	
Size(in)	0.5	0.75	1	1.5	2	3	4	6	8	10	12	14	16	18	20	22	24
MOC	ASTM A 105																
Spectacle	ASME B 16.48				ASME B 16.48							Spacer and blind as per ASME B 16.48					
Mechanical Joints																	
Stud Bolts	ASTM A 193 Gr. B7				ASTM A 193 Gr. B7												
Hex Nuts	ASTM A 194 Gr. 2H				ASTM A 194 Gr. 2H												
Gasket	B 16.20,4.5mm, SS Spiral wound with CNAF filler				ASME B 16.20,4.5mm, SS Spiral wound with CNAF filler												

Pressure-Temperature Rating				Maximum Hydrostatic Pressure	
Temp.,Deg F	Pressure, PSI	Temp,Deg C	Pressure, Kg/cm2	Pressure, psig	Pres.,Kg/cm2g
(-) 4 to 100	740	(-) 20 to 38	52	1125 psig	79 Kg/cm2
200	675	93	47.5	Limited by Flange considereing flange as the weakest joint in piping system	
300	655	149	46		
400	635	204	44.6		
500	600	260	44.2		

Notes Releted to Pipe,Fittings,Flanges,Gasket and Stud Bolts -Nuts

1. Welded fittings shall be 100% radiographed.
2.All alloy steel stud bolts and nuts shall be hot dip galvanized or electrogalvanized with minimum coating as per spec.
3. Spectacle blinds and spacer sizes and rating that are not available in ASME B 16.48 shall be as per manufacturer standard. Design shall be submitted to company for review and approval.
4. All pipe thread shall be as per ASME B 1.20.1
5. PMS to be read in conjuction with FS 2004 A.
6. Two jackscrew, 180 degree apart shall be provided in one of the flanges for all orifice flange and speciifed spectacle blind assemblies.
7. Weld Joint Factor for welded pipe shall be as per ASME B 31.3.

Offshore Design Section Engineering Services IS0-9001:2000	**PIPING MATERIAL SPECIFICATION**				Sheet No.	**2 of 2**
	Piping Class		Material	C.A	Spec.No	Revision:2
	B1	# 300	CS	3mm	2004A,Rev 9	Page No. 10
	Design Code:		**ASME B 31.3**			
	Service:	Vent Gas (VG), Blow Down(BD),Process Hydro Carbon Drain (DH),Nitrogen(N),Chemical (C), Water Injection(WI),Process Drain Water(DW),Diesel Fuel(DF), Hydrocarbon Liquid and Vapour with low CO2 AND H2S.				

Branch Table as per API RP 14E

Run Pipe	≤ 1	1-1.5	2	3	4	6	8	10	12	14	16	18	20	24	30
≤ 1	T														
1-1.5	T	T													
2	*	*	T												
3	*	*	T	T											
4	*	*	T	T	T										
6	*	*	W	T	T	T									
8	*	*	W	W	T	T	T								
10	*	*	W	W	W	T	T	T							
12	*	*	W	W	W	T	T	T	T						
14	*	*	W	W	W	W	T	T	T	T					
16	*	*	W	W	W	W	T	T	T	T	T				
18	*	*	W	W	W	W	W	T	T	T	T	T			
20	*	*	W	W	W	W	W	T	T	T	T	T	T		
24	*	*	W	W	W	W	W	W	T	T	T	T	T	T	
30	*	*	W	W	W	W	W	W	W	W	T	T	T	T	T

LEGEND	
*	Sockolet
W	Weldolet
T	TEE

Valve Data

Size(in)	0.5	0.75	1	1.5	2	3	4	6	8	10	12	14	16	18	20	22	24
Gate Valve																	
TAG	VG 42,SW				VG 62,FLANGED												
Rating	# 800				# 300,RF												
Plug Valve																	
TAG																	
Rating																	
Ball Valve																	
TAG	VB 44,SW				VB 64, Lever Operated			VB 66, Gear Operated									
Rating	# 800				# 300, RF												
Globe Valve																	
TAG	VGL 42,SW				VGL 62												
Rating	# 800				# 300, RF												
Check Valve																	
TAG	VC 42,SW,Lift Check				VC 62,Swing Check/ VC 83 (Wafer Check, Note -1)												
Rating	# 800				# 300, RF												
Needle Valve																	
TAG	VN 3,SW																
Rating	# 800																
Butter Fly Valve																	
TAG																	
Rating																	

Notes Releted to Valve and Brach Connection

1. Wafer check valve to be avoided as far as possible; unless the avaliable space constraint does not allow normal check valve . The contractor to take approvel for use of wafer check Valve during pipe routing after extablishing the space constraint.

2. Wafer type Butter Fly Valve may be used only in fire water(Clean water) service.
3. PMS to be read in conjuction with FS 2004 A.
4. Maximum temperature limit for all Ball Valve shall be 121 Degree C

Revision	Date	Description	Prepared By	Reviewed By	Approved By
Revision:2	15.01.16	Issued For Bid	PS	AKM	SJ

Offshore Design Section Engineering Services IS0-9001:2000	PIPING MATERIAL SPECIFICATION				Sheet No.	1 of 2
	Piping Class	Material	C.A	Spec.No	Revision:2	
	D1	# 600	CS	3mm	2004A,Rev 9	Page No. 11
	Design Code:		**ASME B 31.3**			
	Service: Vent Gas (VG), Blow Down(BD),Process Hydro Carbon Drain (DH),Nitrogen(N),Chemical (C), Water Injection(WI),Process Drain Water(DW),Diesel Fuel(DF), Hydrocarbon Liquid and Vapour with low CO2 AND H2S.					

Pipe Data	ASME B 36.10																
Size(in)	0.5	0.75	1	1.5	2	3	4	6	8	10	12	14	16	18	20	22	24
O.D.mm	21.3	26.7	33.4	48.3	60.3	88.9	114.3	168.3	219.1	273.1	323.9	355.6	406.4	457.2	508	558.8	609.6
Sch.	XXS	XXS	XXS	XXS	160	80	80	80	80	80	80	80	80	80	80	80	80
WTmm	7.47	7.82	9.09	10.16	8.74	7.62	8.56	10.97	12.70	15.08	17.47	19.05	21.44	23.82	26.19	28.57	30.96
M.T (%)	12.5	12.5	12.5	12.5	12.5	12.5	12.5	12.5	12.5	12.5	12.5	12.5	12.5				
TYPE	Seamless													LSAW with 100% Radiography, Note-7			
MOC	ASTM A 106 Gr. B													API 5L Gr. B			
Ends	PE				BE												
Fittings Data																	
Size(in)	0.5	0.75	1	1.5	2	3	4	6	8	10	12	14	16	18	20	22	24
TYPE	Socket Weld				Butt Weld												
Rating	# 9000				160	80	80	80	80	80	80	80	80	80	80	80	80
MOC	ASTM A 105 U.N.O				ASTM A 234 Gr. WPB, Seamless U.N.O									ASTM A234 Gr.WPB,Welded U.N.O			
Elbow	ASMEB16.11				ASME B 16.9									ASME B 16.9			
Tee	ASMEB16.11				ASME B 16.9									ASME B 16.9			
Red.	ASMEB16.11				ASME B 16.9									ASME B 16.9			
Cap	ASMEB16.11				ASME B 16.9									ASME B 16.9			
Coupl	ASMEB16.11				ASME B 16.9									ASME B 16.9			
Plug	ASMEB16.11				ASME B 16.9									ASME B 16.9			
Union																	
Elbowlet	MSS SP 97,ASTM A 105				MSS SP 97,ASTM A 105									MSS SP 97,ASTM A 105			
Sockolet	MSS SP 97,ASTM A 105				MSS SP 97,ASTM A 105									MSS SP 97,ASTM A 105			
Weldolet	MSS SP 97,ASTM A 105				MSS SP 97,ASTM A 105									MSS SP 97,ASTM A 105			
Nipple	MSS SP 97,Same as pipe				MOC Same as pipe									MOC Same as pipe			
Swage	MSS SP 95,Same as pipe				MSS SP 95,MOC Same as pipe									MSS SP 95,MOC Same as pipe			
Flange																	
Size(in)	0.5	0.75	1	1.5	2	3	4	6	8	10	12	14	16	18	20	22	24
TYPE	SW				WN												
MOC	ASTM A 105				ASTM A 105												
FACE	RF-Smooth Finished				RF, Smooth Finished												
STD.	ASME B 16.5				ASME B 16.5, But welding ends as per ASME B 16.25												
Spectacle Blind/Spacer Blinds																	
Size(in)	0.5	0.75	1	1.5	2	3	4	6	8	10	12	14	16	18	20	22	24
MOC	ASTM A 105																
Spectacle	ASME B 16.48				ASME B 16.48							Spacer and blind as per ASME B 16.48					
Mechanical Joints																	
Stud Bolts	ASTM A 193 Gr. B7				ASTM A 193 Gr. B7												
Hex Nuts	ASTM A 194 Gr. 2H				ASTM A 194 Gr. 2H												
Gasket	B 16.20,4.5mm, SS Spiral wound with CNAF filler				ASME B 16.20,4.5mm, SS Spiral wound with CNAF filler												

Pressure-Temperature Rating				Maximum Hydrostatic Pressure	
Temp.,Deg F	Pressure, PSI	Temp,Deg C	Pressure, Kg/cm2	Pressure, psig	Pres.,Kg/cm2g
(-) 4 to 100	1480	(-) 20 to 38	104	2225 psig	157 Kg/cm2
200	1360	93	95.61	Limited by Flange considereing flange as the weakest joint in piping system	
300	1310	149	92.1		
400	1265	204	88.94		
500	1205	260	84.72		

Notes Releted to Pipe,Fittings,Flanges,Gasket and Stud Bolts -Nuts

1. Welded fittings shall be 100% radiographed.
2.All alloy steel stud bolts and nuts shall be hot dip galvanized or electrogalvanized with minimum coating as per spec.
3. Spectacle blinds and spacer sizes and rating that are not available in ASME B 16.48 shall be as per manufacturer standard. Design shall be submitted to company for review and approval.
4. All pipe thread shall be as per ASME B 1.20.1
5. PMS to be read in conjuction with FS 2004 A.
6. Two jackscrew, 180 degree apart shall be provided in one of the flanges for all orifice flange speciifed spectacle blind assemblies.
7. Weld Joint Factor for welded pipe shall be as per ASME B 31.3.

Offshore Design Section Engineering Services IS0-9001:2000	**PIPING MATERIAL SPECIFICATION**				Sheet No.	**2 of 2**	
	Piping Class		Material	C.A	Spec.No	Revision:2	
	D1	# 600	CS	3mm	2004A,Rev 9	Page No.	12
	Design Code:		**ASME B 31.3**				
	Service:	Vent Gas (VG), Blow Down(BD),Process Hydro Carbon Drain (DH),Nitrogen(N),Chemical (C),					
	Water Injection(WI),Process Drain Water(DW),Diesel Fuel(DF), Hydrocarbon Liquid and Vapour with low CO2 AND H2S.						

Branch Table as per API RP 14E

Run Pipe	≤ 1	1-1.5	2	3	4	6	8	10	12	14	16	18	20	24	30
≤ 1	T														
1-1.5	T	T													
2	*	*	T												
3	*	*	T	T											
4	*	*	T	T	T										
6	*	*	W	T	T	T									
8	*	*	W	W	T	T	T								
10	*	*	W	W	W	T	T	T							
12	*	*	W	W	W	T	T	T	T						
14	*	*	W	W	W	W	T	T	T	T					
16	*	*	W	W	W	W	T	T	T	T	T				
18	*	*	W	W	W	W	W	T	T	T	T	T			
20	*	*	W	W	W	W	W	T	T	T	T	T	T		
24	*	*	W	W	W	W	W	W	T	T	T	T	T	T	
30	*	*	W	W	W	W	W	W	W	W	T	T	T	T	T

LEGEND	
*	Sockolet
W	Weldolet
T	TEE

	Branch Pipe														
Valve Data															
Size(in)	0.5	0.75	1	1.5	2	3	4	6	8	10	12	14	16	18	20	22	24
Gate Valve																	
TAG	VG 42,SW				VG 66,FLANGED												
Rating	# 800				# 600,RF												
Plug Valve																	
TAG																	
Rating																	
Ball Valve																	
TAG	VB 44,SW				VB 76, Lever Operated			VB 77, Gear Operated									
Rating	# 800				# 600, RF												
Globe Valve																	
TAG	VGL 42,SW				VGL 67												
Rating	# 800				# 600, RF												
Check Valve																	
TAG	VC 42,SW,Lift Check				VC 66,Swing Check/ VC 86 (Wafer Check, Note -1)												
Rating	# 800				# 600, RF												
Needle Valve																	
TAG	VN 3,SW																
Rating	# 800																
Butter Fly Valve																	
TAG																	
Rating																	

Notes Releted to Valve and Brach Connection

1. Wafer check valve to be avoided as far as possible; unless the avaliable space constraint does not allow normal check valve . The contractor to take approvel for use of wafer check Valve during pipe routing after extablishing the space constraint.
2. Wafer type Butter Fly Valve may be used only in fire water(Clean water) service.
3. PMS to be read in conjuction with FS 2004 A.
4. Maximum temperature limit for all Ball Valve shall be 121 Degree C

Revision	Date	Description	Prepared By	Reviewed By	Approved By
Revision:2	15.01.16	Issued For Bid	PS	AKM	SJ

Offshore Design Section Engineering Services IS0-9001:2000	PIPING MATERIAL SPECIFICATION				Sheet No.	1 of 2
	Piping Class	Material	C.A	Spec.No		Revision:2
	E1	# 900	CS	3mm	2004A,Rev 9	Page No. 13
	Design Code:	**ASME B 31.3**				
	Service:	Vent Gas (VG), Blow Down(BD),Process Hydro Carbon Drain (DH),Nitrogen(N),Chemical (C), Water Injection(WI),Process Drain Water(DW),Diesel Fuel(DF), Hydrocarbon Liquid and Vapour with low CO2 AND H2S.				

Pipe Data	ASME B 36.10																
Size(in)	0.5	0.75	1	1.5	2	3	4	6	8	10	12	14.00	16.00	18	20	22	24
O.D.mm	21.3	26.7	33.4	48.3	60.3	88.9	114	168.3	219	273.1	323.9	355.6	406.4	457.2	508	558.8	609.6
Sch.	XXS	XXS	XXS	XXS	160	160	120	120	120	120	120	120	120	120	120	120	120
WTmm	7.47	7.82	9.09	10.16	8.7	11.12	11.1	14.27	18.3	21.44	25.40	27.79	30.96	34.92	38.10	41.27	46.02
M.T (%)	12.5	12.5	12.5	12.5	12.5	12.5	12.5	12.5	12.5	12.5	12.5	12.5	12.5				
TYPE	Seamless													LSAW with 100% Radiography, Note-10			
MOC	ASTM A 106 Gr. B													API 5L Gr. B			
Ends	PE				BE												
Fittings Data																	
Size(in)	0.5	0.75	1	1.5	2	3	4	6	8	10	12	14	16	18	20	22	24
TYPE	Socket Weld				Butt Weld												
Rating	# 9000				160	160	120	120	120	120	120	120	120	120	120	120	120
MOC	ASTM A 105 U.N.O				ASTM A 234 Gr. WPB, Seamless U.N.O									ASTM A234 Gr.WPB,Welded U.N.O			
Elbow	ASMEB16.11				ASME B 16.9									ASME B 16.9			
Tee	ASMEB16.11				ASME B 16.9									ASME B 16.9			
Red.	ASMEB16.11				ASME B 16.9									ASME B 16.9			
Cap	ASMEB16.11				ASME B 16.9									ASME B 16.9			
Coupl	ASMEB16.11				ASME B 16.9									ASME B 16.9			
Plug	ASMEB16.11				ASME B 16.9									ASME B 16.9			
Union																	
Elbowlet	MSS SP 97,ASTM A 105				MSS SP 97,ASTM A 105									MSS SP 97,ASTM A 105			
Sockolet	MSS SP 97,ASTM A 105				MSS SP 97,ASTM A 105									MSS SP 97,ASTM A 105			
Weldolet	MSS SP 97,ASTM A 105				MSS SP 97,ASTM A 105									MSS SP 97,ASTM A 105			
Nipple	MSS SP 97,Same as pipe				MOC Same as pipe									MOC Same as pipe			
Swage	MSS SP 95,Same as pipe				MSS SP 95,MOC Same as pipe									MSS SP 95,MOC Same as pipe			
Flange																	
Size(in)	0.5	0.75	1	1.5	2	3	4	6	8	10	12	14	16	18	20	22	24
TYPE	SW				WN												
MOC	ASTM A 105				ASTM A 105												
FACE	RTJ-Note 7				RTJ, Note 7												
STD.	ASME B 16.5				ASME B 16.5, But welding ends as per ASME B 16.25												
Spectacle Blind/Spacer Blinds																	
Size(in)	0.5	0.75	1	1.5	2	3	4	6	8	10	12	14	16	18	20	22	24
MOC	ASTM A 105																
Spectacle	ASME B 16.48				ASME B 16.48							Spacer and blind as per ASME B 16.48					
Mechanical Joints																	
Stud Bolts	ASTM A 193 Gr. B7				ASTM A 193 Gr. B7												
Hex Nuts	ASTM A 194 Gr. 2H				ASTM A 194 Gr. 2H												
Gasket	B 16.20,OCT ring of Soft Iron with Max. 90BHN				ASME B 16.20,OCT ring of Soft Iron with Max. Hardness of 90BHN												

Pressure-Temperature Rating				Maximum Hydrostatic Pressure	
Temp.,Deg F	Pressure, PSI	Temp,Deg C	Pressure, Kg/cm2	Pressure, psig	Pres.,Kg/cm2g
(-) 4 to 100	2220	(-) 20 to 38	156	3350 psig	236 Kg/cm2
200	2035	93	143.07	Limited by Flange considereing flange as the weakest joint in piping system	
300	1965	149	138.2		
400	1900	204	133.6		
500	1810	260	127.2		

Notes Releted to Pipe,Fittings,Flanges,Gasket and Stud Bolts -Nuts

1. Welded fittings shall be 100% radiographed.
2.All alloy steel stud bolts and nuts shall be hot dip galvanized or electrogalvanized with minimum coating as per spec.
3. Spectacle blinds and spacer sizes and rating that are not available in ASME B 16.48 shall be as per manufacturer standard. Design shall be submitted to company for review and approval.
4. All pipe thread shall be as per ASME B 1.20.1
5. PMS to be read in conjuction with FS 2004 A.
6. Gasket Contact Surface shall have maximum roughness of 63AARH
7. Minimum RTJ groove hardness shall be 120BHN
8. Octagonal (OCT) ring shall be Hot Dip Galvanized/electro galvanized.
9. Two jackscrew, 180 degree apart shall be provided in one of the flanges for all orifice flange, WNRTJ flange 3" and above and specified spectacle blind assemblies.
10. Weld Joint Factor for welded pipe shall be as per ASME B 31.3.

Offshore Design Section Engineering Services IS0-9001:2000	**PIPING MATERIAL SPECIFICATION**				Sheet No.	**2 of 2**
	Piping Class		Material	C.A	Spec.No	Revision:2
	E1	# 900	CS	3mm	2004A,Rev 9	Page No. 14
	Design Code:		**ASME B 31.3**			
	Service:	Vent Gas (VG), Blow Down(BD),Process Hydro Carbon Drain (DH),Nitrogen(N),Chemical (C),				
	Water Injection(WI),Process Drain Water(DW),Diesel Fuel(DF), Hydrocarbon Liquid and Vapour with low CO2 AND H2S.					

Branch Table as per API RP 14E

Run Pipe	≤ 1	1-1.5	2	3	4	6	8	10	12	14	16	18	20	24	30
≤ 1	T														
1-1.5	T	T													
2	*	*	T												
3	*	*	T	T											
4	*	*	T	T	T										
6	*	*	W	T	T	T									
8	*	*	W	W	T	T	T								
10	*	*	W	W	W	T	T	T							
12	*	*	W	W	W	T	T	T	T						
14	*	*	W	W	W	W	T	T	T	T					
16	*	*	W	W	W	W	T	T	T	T	T				
18	*	*	W	W	W	W	W	T	T	T	T	T			
20	*	*	W	W	W	W	W	T	T	T	T	T	T		
24	*	*	W	W	W	W	W	W	T	T	T	T	T	T	
30	*	*	W	W	W	W	W	W	W	W	T	T	T	T	T

LEGEND	
*	Sockolet
W	Weldolet
T	TEE

	Branch Pipe															
	≤ 1	1-1.5	2	3	4	6	8	10	12	14	16	18	20	24	30	

Valve Data

Size(in)	0.5	0.75	1	1.5	2	3	4	6	8	10	12	14	16	18	20	22	24
Gate Valve																	
TAG	VG 46,SW				VG 76,FLANGED												
Rating	# 1500				# 900,RTJ												
Plug Valve																	
TAG																	
Rating																	
Ball Valve																	
TAG	Use Gate Valve, VG 46				VB 84, L -	VB 85, Gear Operated											
Rating	# 1500				# 900, RTJ												
Globe Valve																	
TAG	VGL 44,SW				VGL 72												
Rating	# 1500				# 900, RTJ												
Check Valve																	
TAG	VC 44,SW,Lift Check				VC 68,Swing Check												
Rating	# 1500				# 900, RTJ												
Needle Valve																	
TAG	VN 4,SW																
Rating	# 1500																
Butter Fly Valve																	
TAG																	
Rating																	

Notes Releted to Valve and Brach Connection

1. PMS to be read in conjuction with FS 2004 A.
2. Maximum temperature limit for all Ball Valve shall be 121 Degree C

Revision	Date	Description	Prepared By	Reviewed By	Approved By
Revision:2	15.01.16	Issued For Bid	PS	AKM	SJ

Offshore Design Section Engineering Services IS0-9001:2000	PIPING MATERIAL SPECIFICATION				Sheet No.	1 of 2
	Piping Class		Material	C.A	Spec.No	Revision:1
	A2	# 150, Note-6	CS	1.5mm	2004A,Rev 9	Page No. 15
	Design Code:		**ASME B 31.3**			
	Service:		Glycol/ Therminol/Hot Oil			

Pipe Data	ASME B 36.10																
Size(in)	0.5	0.75	1	1.5	2	3	4	6	8	10	12	14	16	18	20	22	24
O.D.mm	21.3	26.7	33.4	48.3	60.3	88.9	114.3	168.3	219.1	273.1	323.9	355.6	406.4	457.2	508	558.8	609.60
Sch.	XS	XS	XS	XS	80	80	80	80	Std								
WTmm	3.73	3.91	4.55	5.08	5.54	7.62	8.56	10.97	8.18								
M.T (%)	12.5	12.5	12.5	12.5	12.5	12.5	12.5	12.5	12.5								
TYPE	Seamless																
MOC	ASTM A 106 Gr. B																
Ends	PE				BE												

Fittings Data																	
Size(in)	0.5	0.75	1	1.5	2	3	4	6	8	10	12	14	16	18	20	22	24
TYPE	Socket Weld				Butt Weld												
Rating	# 3000				80	80	80	80	Std								
MOC	ASTM A 105 U.N.O				ASTM A 234 Gr. WPB, Seamless U.N.O												
Elbow	ASMEB16.11				ASME B 16.9												
Tee	ASMEB16.11				ASME B 16.9												
Red.	ASMEB16.11				ASME B 16.9												
Cap	ASMEB16.11				ASME B 16.9												
Coupl	ASMEB16.11				ASME B 16.9												
Plug	ASMEB16.11				ASME B 16.9												
Union																	
Elbowlet	MSS SP 97,ASTM A 105				MSS SP 97,ASTM A 105												
Sockolet	MSS SP 97,ASTM A 105				MSS SP 97,ASTM A 105												
Weldolet	MSS SP 97,ASTM A 105				MSS SP 97,ASTM A 105												
Nipple	MSS SP 97,Same as pipe				MOC Same as pipe												
Swage	MSS SP 95,Same as pipe				MSS SP95,MOC Same as pipe												

Flange																	
Size(in)	0.5	0.75	1	1.5	2	3	4	6	8	10	12	14	16	18	20	22	24
TYPE	SW				WN												
MOC	ASTM A 105				ASTM A 105												
FACE	RF-smooth Finished				RF, smooth Finished												
STD.	ASME B 16.5				ASME B 16.5, But welding ends as per ASME B 16.25												

Spectacle Blind/Spacer Blinds																	
Size(in)	0.5	0.75	1	1.5	2	3	4	6	8	10	12	14	16	18	20	22	24
MOC	ASTM A 105																
Spectacle	ASME B 16.48				ASME B 16.48							Spacer and blind as per ASME B 16.48					

Mechanical Joints	
Stud Bolts	ASTM A 193 Gr. B7 / ASTM A 193 Gr. B7
Hex Nuts	ASTM A 194 Gr. 2H / ASTM A 194 Gr. 2H
Gasket	16.20,4.5mm, SS Spiral wound with CNAF filler / ASME B 16.20,4.5mm, SS Spiral wound with CNAF filler

Pressure-Temperature Rating				Maximum Hydrostatic Pressure	
Temp.,Deg F	Pressure, PSI	Temp,Deg C	Pressure, Kg/cm2	Pressure, psig	Pres.,Kg/cm2g
(-) 4 to 100	285	(-) 20 to 38	20	450 psig	31.6 Kg/cm2
200	260	93	18.3	Limited by Flange considereing flange as the weakest joint in piping system. For design temperaure higher than test temperature, Test pressure, (Pt) shall be calculated as follows:Pt=1.5xPx(St/S) where P=Internal Design Pressure,St=Allowable Stress at Test Temperature,S=Allowable Stress at Design Temperature.	
300	230	149	16.2		
400	200	204	14.1		
500	170	260	11.9		
600	140	316	9.84		
700	110	371	7.7		

Notes Releted to Pipe,Fittings,Flanges,Gasket and Stud Bolts -Nuts

1. Welded fittings shall be 100% radiographed.
2.All alloy steel stud bolts and nuts shall be hot dip galvanized or electrogalvanized with minimum coating as per spec.
3. Spectacle blinds and spacer sizes and rating that are not available in ASME B 16.48 shall be as per manufacturer standard. Design shall be submitted to company for review and approval.
4. All pipe thread shall be as per ASME B 1.20.1
6. Two jackscrew, 180 degree apart shall be provided in one of the flanges for all orifice flange
5. PMS to be read in conjuction with FS 2004 A.
6. To minimize leakage all flanges used under this PMS shall be of #300 instead of #150

Offshore Design Section Engineering Services IS0-9001:2000	**PIPING MATERIAL SPECIFICATION**				Sheet No.	**2 of 2**
	Piping Class		Material	C.A	Spec.No	Revision:1
	A2	# 150, Note-6	CS	1.5mm	2004A,Rev 9	Page No.16
	Design Code:		**ASME B 31.3**			
	Service:	Glycol/ Therminol/Hot Oil				
	0					

Branch Table as per API RP 14E

LEGEND	
*	Sockolet
W	Weldolet
T	TEE

Run Pipe	Branch Pipe															
		≤ 1	1-1.5	2	3	4	6	8	10	12	14	16	18	20	24	30
≤ 1		T														
1-1.5		T	T													
2		*	*	T												
3		*	*	T	T											
4		*	*	T	T	T										
6		*	*	W	T	T	T									
8		*	*	W	W	T	T	T								
10		*	*	W	W	W	T	T	T							
12		*	*	W	W	W	T	T	T	T						
14		*	*	W	W	W	W	T	T	T	T					
16		*	*	W	W	W	W	T	T	T	T	T				
18		*	*	W	W	W	W	W	T	T	T	T	T			
20		*	*	W	W	W	W	W	T	T	T	T	T	T		
24		*	*	W	W	W	W	W	W	T	T	T	T	T	T	
30		*	*	W	W	W	W	W	W	W	W	T	T	T	T	T

Valve Data

Size(in)	0.5	0.75	1	1.5	2	3	4	6	8	10	12	14	16	18	20	22	24
Gate Valve																	
TAG	VG 42,SW				Use Valve Indicated in B2 PMS												
Rating	# 800				# 300,RF												
Plug Valve																	
TAG																	
Rating																	
Ball Valve																	
TAG	VB 44,SW				Use Valve Indicated in B2 PMS												
Rating	# 800				# 300,RF												
Globe Valve																	
TAG	VGL 42,SW				Use Valve Indicated in B2 PMS												
Rating	# 800				# 300,RF												
Check Valve																	
TAG	VC 42,SW,Lift Check				Use Valve Indicated in B2 PMS												
Rating	# 800				# 300,RF												
Needle Valve																	
TAG	VN 107,SW																
Rating	# 800																
Butter Fly Valve																	
TAG																	
Rating																	

Notes Releted to Valve and Brach Connection

1. Wafer check valve to be avoided as far as possible; unless the avaliable space constraint does not allow normal check valve . The contractor to take approvel for use of wafer check Valve during pipe routing after extablishing the space constraint.

3. PMS to be read in conjuction with FS 2004 A.

4. Maximum temperature limit for all Ball Valve shall be 121 Degree C. For high temperature service use special Valves

Revision	Date	Description	Prepared By	Reviewed By	Approved By
Revision:1	15.01.16	Issued For Bid	PS	AKM	SJ

	Offshore Design Section Engineering Services IS0-9001:2000				**PIPING MATERIAL SPECIFICATION**									Sheet No.		**1 of 2**	
					Piping Class				Material			C.A	Spec.No			Revision : 1	
					B2		# 300		CS			1.5mm	2004A,Rev 9			Page No.	17
					Design Code:				**ASME B 31.3**								
					Service:				Glycol/ Therminol/Hot Oil								
Pipe Data	ASME B 36.10																
Size(in)	0.5	0.75	1	1.5	2	3	4	6	8	10	12	14	16	18	20	22	24
O.D.mm	21.3	26.7	33.4	48.3	60.3	88.9	114.3	168.3	219.1	273	324	355.6	406.4	457.2	508	558.8	609.6
Sch.	160	160	XS	XS	80	80	80	80	Std								
WTmm	4.77	5.56	4.55	5.08	5.54	7.62	8.56	10.97	8.18								
M.T (%)	12.5	12.5	12.5	12.5	12.5	12.5	12.5	12.5	12.5	12.5	12.5	12.5	12.5				
TYPE	Seamless																
MOC	ASTM A 106 Gr. B																
Ends	PE				BE												
Fittings Data																	
Size(in)	0.5	0.75	1	1.5	2	3	4	6	8	10	12	14	16	18	20	22	24
TYPE	Socket Weld				Butt Weld												
Rating	# 6000		# 3000		80	80	80	80	Std								
MOC	ASTM A 105 U.N.O				ASTM A 234 Gr. WPB, Seamless U.N.O												
Elbow	ASMEB16.11				ASME B 16.9												
Tee	ASMEB16.11				ASME B 16.9												
Red.	ASMEB16.11				ASME B 16.9												
Cap	ASMEB16.11				ASME B 16.9												
Coupl	ASMEB16.11				ASME B 16.9												
Plug	ASMEB16.11				ASME B 16.9												
Union																	
Elbowlet	MSS SP 97,ASTM A 105				MSS SP 97,ASTM A 105												
Sockolet	MSS SP 97,ASTM A 105				MSS SP 97,ASTM A 105												
Weldolet	MSS SP 97,ASTM A 105				MSS SP 97,ASTM A 105												
Nipple	MSS SP 97,Same as pipe				MOC Same as pipe												
Swage	MSS SP 95,Same as pipe				MSS SP95,MOC Same as pipe												
Flange																	
Size(in)	0.5	0.75	1	1.5	2	3	4	6	8	10	12	14	16	18	20	22	24
TYPE	SW				WN												
MOC	ASTM A 105				ASTM A 105												
FACE	RF-Serrated Finished				RF, Serrated Finished												
STD.	ASME B 16.5				ASME B 16.5, But welding ends as per ASME B 16.25												
Spectacle Blind/Spacer Blinds																	
Size(in)	0.5	0.75	1	1.5	2	3	4	6	8	10	12	14	16	18	20	22	24
MOC	ASTM A 105																
Spectacle	ASME B 16.48				ASME B 16.48							Spacer and blind as per ASME B 16.48					
Mechanical Joints																	
Stud Bolts	ASTM A 193 Gr. B7				ASTM A 193 Gr. B7												
Hex Nuts	ASTM A 194 Gr. 2H				ASTM A 194 Gr. 2H												
Gasket	16.20,4.5mm, SS Spiral wound with CNAF filler				ASME B 16.20,4.5mm, SS Spiral wound with CNAF filler												

Pressure-Temperature Rating				Maximum Hydrostatic Pressure	
Temp.,Deg F	Pressure, PSI	Temp,Deg C	Pressure, Kg/cm2	Pressure, psig	Pres.,Kg/cm2g
(-) 4 to 100	740	(-) 20 to 38	52	1125 psig	79 Kg/cm2
200	675	93	47.5	Limited by Flange considereing flange as the weakest joint in piping system. For design temperaure higher than test temperature, Test pressure, (Pt) shall be calculated as follows:Pt=1.5xPx(St/S) where P=Internal Design Pressure,St=Allowable Stress at Test Temperature,S=Allowable Stress at Design Temperature.	
300	655	149	46		
400	635	204	44.6		
500	600	260	44.2		
600	550	316	38.7		
700	535	371	37.6		

Notes Releted to Pipe,Fittings,Flanges,Gasket and Stud Bolts -Nuts

1. Welded fittings shall be 100% radiographed.
2.All alloy steel stud bolts and nuts shall be hot dip galvanized or electrogalvanized with minimum coating as per spec.
3. Spectacle blinds and spacer sizes and rating that are not available in ASME B 16.48 shall be as per manufacturer standard. Design shall be submitted to company for review and approval.
4. All pipe thread shall be as per ASME B 1.20.1
5. PMS to be read in conjuction with FS 2004 A.
6. Two jackscrew, 180 degree apart shall be provided in one of the flanges for all orifice flange

Offshore Design Section Engineering Services IS0-9001:2000	**PIPING MATERIAL SPECIFICATION**				Sheet No.	**2 of 2**
	Piping Class		Material	C.A	Spec.No	Revision : 1
	B2	# 300	CS	1.5mm	2004A,Rev 9	Page No. 18
	Design Code:		**ASME B 31.3**			
	Service:	Glycol/ Therminol/Hot Oil				
	0					

Branch Table as per API RP 14E

Run Pipe \ Branch Pipe	≤ 1	1-1.5	2	3	4	6	8	10	12	14	16	18	20	24	30
≤ 1	T														
1-1.5	T	T													
2	*	*	T												
3	*	*	T	T											
4	*	*	T	T	T										
6	*	*	W	T	T	T									
8	*	*	W	W	T	T	T								
10	*	*	W	W	W	T	T	T							
12	*	*	W	W	W	T	T	T	T						
14	*	*	W	W	W	W	T	T	T	T					
16	*	*	W	W	W	W	T	T	T	T	T				
18	*	*	W	W	W	W	W	T	T	T	T	T			
20	*	*	W	W	W	W	W	T	T	T	T	T	T		
24	*	*	W	W	W	W	W	W	T	T	T	T	T	T	
30	*	*	W	W	W	W	W	W	W	W	T	T	T	T	T

LEGEND	
*	Sockolet
W	Weldolet
T	TEE

Valve Data

Size(in)	0.5	0.75	1	1.5	2	3	4	6	8	10	12	14	16	18	20	22	24
Gate Valve																	
TAG	VG 137,SW				VG 77,FLANGED												
Rating	# 800				# 300,RF												
Plug Valve																	
TAG																	
Rating																	
Ball Valve																	
TAG	VB 137,SW				VB 177 (Note-5)												
Rating	# 800				# 300, RF												
Globe Valve																	
TAG	VGL 137,SW				VGL 177												
Rating	# 800				# 300, RF												
Check Valve																	
TAG	VC 137,SW,Lift Check				VC 177,Swing Check												
Rating	# 800				# 300, RF												
Needle Valve																	
TAG	VN 107,SW																
Rating	# 800																
Butter Fly Valve																	
TAG																	
Rating																	

Notes Releted to Valve and Brach Connection

1. Wafer check valve to be avoided as far as possible; unless the avaliable space constraint does not allow normal check valve . The contractor to take approvel for use of wafer check Valve during pipe routing after extablishing the space constraint.

3. PMS to be read in conjuction with FS 2004 A.
4. Maximum temperature limit for all Ball Valve shall be 371 Degree C
5. Type of Valve metal seated or soft seated shall be firmed up based on service temperature.

Revision	Date	Description	Prepared By	Reviewed By	Approved By
Revision : 1	15.01.16	Issued For Bid	PS	AKM	SJ

Offshore Design Section Engineering Services IS0-9001:2000	PIPING MATERIAL SPECIFICATION				Sheet No.	1 of 2
	Piping Class		Material	C.A	Spec.No	Revision: 1
	D2	# 600	CS	1.5mm	2004A,Rev 9	Page No. 19
	Design Code:		**ASME B 31.3**			
	Service:	Glycol/ Therminol/Hot Oil				

Pipe Data	ASME B 36.10																
Size(in)	0.5	0.75	1	1.5	2	3	4	6	8	10	12	14	16	18	20	22	24
O.D.mm	21.3	26.7	33.4	48.3	60.3	88.9	114.3	168.3	219.1	273.1	323.9	355.6	406.4	457.2	508	558.8	609.6
Sch.	160	160	160	160	80	80	80	80	80								
WTmm	4.77	5.56	6.35	7.14	5.54	7.62	8.56	10.97	12.7								
M.T (%)	12.5	12.5	12.5	12.5	12.5	12.5	12.5	12.5	12.5	12.5	12.5	12.5	12.5				
TYPE	Seamless																
MOC	ASTM A 106 Gr. B																
Ends	PE				BE												

Fittings Data																	
Size(in)	0.5	0.75	1	1.5	2	3	4	6	8	10	12	14	16	18	20	22	24
TYPE	Socket Weld				Butt Weld												
Rating	# 6000				80	80	80	80	80								
MOC	ASTM A 105 U.N.O				ASTM A 234 Gr. WPB, Seamless U.N.O												
Elbow	ASMEB16.11				ASME B 16.9												
Tee	ASMEB16.11				ASME B 16.9												
Red.	ASMEB16.11				ASME B 16.9												
Cap	ASMEB16.11				ASME B 16.9												
Coupl	ASMEB16.11				ASME B 16.9												
Plug	ASMEB16.11				ASME B 16.9												
Union																	
Elbowlet	MSS SP 97,ASTM A 105				MSS SP 97,ASTM A 105												
Sockolet	MSS SP 97,ASTM A 105				MSS SP 97,ASTM A 105												
Weldolet	MSS SP 97,ASTM A 105				MSS SP 97,ASTM A 105												
Nipple	MSS SP 97,Same as pipe				MOC Same as pipe												
Swage	MSS SP 95,Same as pipe				MSS SP 95,MOC Same as pipe												

Flange																	
Size(in)	0.5	0.75	1	1.5	2	3	4	6	8	10	12	14	16	18	20	22	24
TYPE	SW				WN												
MOC	ASTM A 105				ASTM A 105												
FACE	RF-Smooth Finished				RF, Smooth Finished												
STD.	ASME B 16.5				B 16.5, But welding ends as per B 16.25												

Spectacle Blind/Spacer Blinds																	
Size(in)	0.5	0.75	1	1.5	2	3	4	6	8	10	12	14	16	18	20	22	24
MOC	ASTM A 105																
Spectacle	ASME B 16.48				ASME B 16.48												

Mechanical Joints		
Stud Bolt	ASTM A 193 Gr. B7	ASTM A 193 Gr. B7
Hex Nuts	ASTM A 194 Gr. 2H	ASTM A 194 Gr. 2H
Gasket	B 16.20,4.5mm, SS Spiral wound with CNAF filler	B 16.20,4.5mm, SS Spiral wound CNAF filler

Pressure-Temperature Rating

Temp.,Deg F	Pressure, PSI	Temp,Deg C	Pressure, Kg/cm2
(-) 4 to 100	1480	(-) 20 to 38	104
200	1360	93	96
300	1310	149	92
400	1265	204	89
500	1205	260	85
600	1135	316	78
700	1060	371	75

Maximum Hydrostatic Pressure

Pressure, psig	Pres.,Kg/cm2g
2225 psig	157 Kg/cm2

Limited by Flange considereing flange as the weakest joint in piping system. For design temperaure higher than test temperature, Test pressure, (Pt) shall be calculated as follows:Pt=1.5xPx(St/S) where P=Internal Design Pressure,St=Allowable Stress at Test Temperature,S=Allowable Stress at Design Temperature.

Notes Releted to Pipe,Fittings,Flanges,Gasket and Stud Bolts -Nuts

1. Welded fittings shall be 100% radiographed.
2.All alloy steel stud bolts and nuts shall be hot dip galvanized or electrogalvanized with minimum coating as per spec.
3. Spectacle blinds and spacer sizes and rating that are not available in ASME B 16.48 shall be as per manufacturer standard. Design shall be submitted to company for review and approval.
4. All pipe thread shall be as per ASME B 1.20.1
5. PMS to be read in conjuction with FS 2004 A.
6. Two jackscrew, 180 degree apart shall be provided in one of the flanges for all orifice flange

Offshore Design Section Engineering Services IS0-9001:2000	**PIPING MATERIAL SPECIFICATION**				Sheet No.	**2 of 2**
	Piping Class		Material	C.A	Spec.No	Revision: 1
	D2	# 600	CS	1.5mm	2004A,Rev 9	Page No. 20
	Design Code:		**ASME B 31.3**			
	Service:	Glycol/ Therminol/Hot Oil				
	0					

Branch Table as per API RP 14E

LEGEND	
*	Sockolet
W	Weldolet
T	TEE

Run Pipe	Branch Pipe ≤ 1	1-1.5	2	3	4	6	8	10	12	14	16	18	20	24	30
≤ 1	T														
1-1.5	T	T													
2	*	*	T												
3	*	*	T	T											
4	*	*	T	T	T										
6	*	*	W	T	T	T									
8	*	*	W	W	T	T	T								
10	*	*	W	W	W	T	T	T							
12	*	*	W	W	W	T	T	T	T						
14	*	*	W	W	W	W	T	T	T	T					
16	*	*	W	W	W	W	T	T	T	T	T				
18	*	*	W	W	W	W	W	T	T	T	T	T			
20	*	*	W	W	W	W	W	T	T	T	T	T	T		
24	*	*	W	W	W	W	W	W	T	T	T	T	T	T	
30	*	*	W	W	W	W	W	W	W	W	T	T	T	T	T

Valve Data

Size(in)	0.5	0.75	1	1.5	2	3	4	6	8	10	12	14	16	18	20	22	24
Gate Valve																	
TAG	VG 137,SW				VG 66,FLANGED												
Rating	# 800				# 600,RF												
Plug Valve																	
TAG																	
Rating																	
Ball Valve																	
TAG	VB 137,SW				VB 76,FLANGED (Note-4)												
Rating	# 800				# 600,RF												
Globe Valve																	
TAG	VGL 137,SW				VGL 67,FLANGED												
Rating	# 800				# 600,RF												
Check Valve																	
TAG	VC 137,SW,Lift Check				VC 66,Swing Check												
Rating	# 800				# 600, RF												
Needle Valve																	
TAG	VN 107,SW																
Rating	# 800																
Butter Fly Valve																	
TAG																	
Rating																	

Notes Releted to Valve and Brach Connection

1. Wafer check valve to be avoided as far as possible; unless the avaliable space constraint does not allow normal check valve . The contractor to take approvel for use of wafer check Valve during pipe routing after extablishing the space constraint.
2. PMS to be read in conjuction with FS 2004 A.
3. Maximum temperature limit for all Ball Valve shall be 371 Degree C
4. Type of Valve metal seated or soft seated shall be firmed up based on service temperature.

Revision	Date	Description	Prepared By	Reviewed By	Approved By
Revision: 1	15.01.16	Issued For Bid	PS	AKM	SJ

	Offshore Design Section Engineering Services IS0-9001:2000				**PIPING MATERIAL SPECIFICATION**									Sheet No.		**1 of 2**	
					Piping Class				Material		C.A	Spec.No				Revision: 0	
					E2		# 900		CS		1.5mm	2004A,Rev 9				Page No	21
					Design Code:				**ASME B 31.3**								
					Service:		Glycol/ Therminol/Hot Oil										

Pipe Data	ASME B 36.10																
Size(in)	0.5	0.75	1	1.5	2	3	4	6	8	10	12	14	16	18	20	22	24
O.D.mm	21.3	26.7	33.4	48.3	60.3	88.9	114.3	168.3	219.1	273	323.9	356	406	457	508	558.8	609.6
Sch.	XXS	XXS	XXS	XXS	160	160	120	120	120								
WTmm	7.47	7.82	9.09	10.16	8.74	11.12	11.12	14.27	18.26								
M.T (%)	12.5	12.5	12.5	12.5	12.5	12.5	12.5	12.5	12.5	12.5	12.5	12.5	12.5				
TYPE	Seamless																
MOC	ASTM A 106 Gr. B																
Ends	PE				BE												

Fittings Data																	
Size(in)	0.5	0.75	1	1.5	2	3	4	6	8	10	12	14	16	18	20	22	24
TYPE	Socket Weld				Butt Weld												
Rating	# 9000				160	160	120	120	120								
MOC	ASTM A 105 U.N.O				ASTM A 234 Gr. WPB, Seamless U.N.O												
Elbow	ASMEB16.11				ASME B 16.9												
Tee	ASMEB16.11				ASME B 16.9												
Red.	ASMEB16.11				ASME B 16.9												
Cap	ASMEB16.11				ASME B 16.9												
Coupl	ASMEB16.11				ASME B 16.9												
Plug	ASMEB16.11				ASME B 16.9												
Union																	
Elbowlet	MSS SP 97,ASTM A 105				MSS SP 97,ASTM A 105												
Sockolet	MSS SP 97,ASTM A 105				MSS SP 97,ASTM A 105												
Weldolet	MSS SP 97,ASTM A 105				MSS SP 97,ASTM A 105												
Nipple	MSS SP 97,Same as pipe				MOC Same as pipe												
Swage	MSS SP 95,Same as pipe				MSS SP 95,MOC Same as pipe												

Flange																	
Size(in)	0.5	0.75	1	1.5	2	3	4	6	8	10	12	14	16	18	20	22	24
TYPE	SW				WN												
MOC	ASTM A 105				ASTM A 105												
FACE	RTJ-Note 7				RTJ-Note 7												
STD.	ASME B 16.5				B 16.5, But welding ends as per B 16.25												

Spectacle Blind/Spacer Blinds																	
Size(in)	0.5	0.75	1	1.5	2	3	4	6	8	10	12	14	16	18	20	22	24
MOC	ASTM A 105																
Spectacle	ASME B 16.48				ASME B 16.48												

Mechanical Joints		
Stud Bolt	ASTM A 193 Gr. B7	ASTM A 193 Gr. B7
Hex Nuts	ASTM A 194 Gr. 2H	ASTM A 194 Gr. 2H
Gasket	B 16.20,OCT ring of Soft Iron, Note-7	B 16.20,OCT ring of Soft Iron, Note-7

Pressure-Temperature Rating				Maximum Hydrostatic Pressure	
Temp.,Deg F	Pressure, PSI	Temp,Deg C	Pressure, Kg/cm2	Pressure, psig	Pres.,Kg/cm2g
(-) 4 to 100	2220	(-) 20 to 38	156	3350 psig	236 Kg/cm2
200	2035	93	143.07	Limited by Flange considereing flange as the weakest joint in piping system. For design temperaure higher than test temperature, Test pressure, (Pt) shall be calculated as follows:Pt=1.5xPx(St/S) where P=Internal Design Pressure,St=Allowable Stress at Test Temperature,S=Allowable Stress at Design Temperature.	
300	1965	149	138.2		
400	1900	204	133.6		
500	1810	260	127.2		
600	1705	316	119.9		
700	1590	371	111.8		

Notes Releted to Pipe,Fittings,Flanges,Gasket and Stud Bolts -Nuts

1. Welded fittings shall be 100% radiographed.
2.All alloy steel stud bolts and nuts shall be hot dip galvanized or electrogalvanized with minimum coating as per spec.
3. Spectacle blinds and spacer sizes and rating that are not available in ASME B 16.48 shall be as per manufacturer standard. Design shall be submitted to company for review and approval.
4. All pipe thread shall be as per ASME B 1.20.1
5. PMS to be read in conjuction with FS 2004 A.
6. Two jackscrew, 180 degree apart shall be provided in one of the flanges for all orifice flange
7. Minimum RTJ groove hardness shall be more than RTJ ring hardness and Octagonal (OCT) ring shall be Hot Dip Galvanized/electro galvanized.
8. Gasket Contact Surface shall have maximum roughness of 63AARH

Offshore Design Section Engineering Services IS0-9001:2000	PIPING MATERIAL SPECIFICATION				Sheet No.	2 of 2	
	Piping Class		Material	C.A	Spec.No	Revision: 0	
	E2	# 900	CS	1.5mm	2004A,Rev 9	Page No	22
	Design Code:		**ASME B 31.3**				
	Service:	Glycol/ Therminol/Hot Oil					
	0						

Branch Table as per API RP 14E

Run Pipe \ Branch Pipe	≤ 1	1-1.5	2	3	4	6	8	10	12	14	16	18	20	24	30
≤ 1	T														
1-1.5	T	T													
2	*	*	T												
3	*	*	T	T											
4	*	*	T	T	T										
6	*	*	W	T	T	T									
8	*	*	W	W	T	T	T								
10	*	*	W	W	W	T	T	T							
12	*	*	W	W	W	T	T	T	T						
14	*	*	W	W	W	W	T	T	T	T					
16	*	*	W	W	W	W	T	T	T	T	T				
18	*	*	W	W	W	W	W	T	T	T	T	T			
20	*	*	W	W	W	W	W	T	T	T	T	T	T		
24	*	*	W	W	W	W	W	W	T	T	T	T	T	T	
30	*	*	W	W	W	W	W	W	W	W	T	T	T	T	T

LEGEND	
*	Sockolet
W	Weldolet
T	TEE

Valve Data

Size(in)	0.5	0.75	1	1.5	2	3	4	6	8	10	12	14	16	18	20	22	24
Gate Valve																	
TAG	VG 46,SW				VG 76,FLANGED												
Rating	# 1500				# 900,RTJ												
Plug Valve																	
TAG																	
Rating																	
Ball Valve																	
TAG	Use Gate Valve, VG 46				VB 84, L-Opted		VB 85, Gear Optd (Note-4)										
Rating	# 1500				# 900, RTJ												
Globe Valve																	
TAG	VGL 44,SW				VGL 72												
Rating	# 1500				# 900, RTJ												
Check Valve																	
TAG	VC 44,SW,Lift Check				VC 68,Swing Check												
Rating	# 1500				# 900, RTJ												
Needle Valve																	
TAG	VN 4,SW																
Rating	# 1500																
Butter Fly Valve																	
TAG																	
Rating																	

Notes Releted to Valve and Brach Connection

1. Wafer check valve to be avoided as far as possible; unless the avaliable space constraint does not allow normal check valve . The contractor to take approvel for use of wafer check Valve during pipe routing after extablishing the space constraint.
2. PMS to be read in conjuction with FS 2004 A.
3. Maximum temperature limit for all Ball Valve shall be 371 Degree C
4. Type of Valve metal seated or soft seated shall be firmed up based on service temperature.

Revision	Date	Description	Prepared By	Reviewed By	Approved By
Revision: 0	15.01.16	Issued For Bid	PS	AKM	SJ

Offshore Design Section Engineering Services IS0-9001:2000					**PIPING MATERIAL SPECIFICATION**									Sheet No.		**1 of 2**	
					Piping Class			Material			C.A		Spec.No			Revision: 2	
					A1N		# 150	CS-NACE			6mm		2004A,Rev 9			Page No.	23
					Design Code: ASME B 31.3 and other applicable Code NACE-MR-01-75/ISO-15156-1/2/3												
					Service: Corrosive HydroCarbon Service-Sour Liquid and Vapour.												
					Instrument Gas Header including 1st Bolck Valve												
Pipe Data	ASME B 36.10																
Size(in)	0.5	0.75	1	1.5	2	3	4	6	8	10	12	14	16	18	20	22	24
O.D.mm	21.3	26.7	33.4	48.3	60.3	88.9	114.3	168.3	219.1	273.1	323.9	355.6	406.4	457.2	508	558.8	609.6
Sch.	XXS	XXS	XXS	XXS	160	160	80	80	60	40	40	40	40	40	40	40	40
WTmm	7.47	7.82	9.09	10.16	8.74	11.13	8.56	10.97	10.31	9.27	10.31	11.12	12.70	14.27	15.08	15.87	17.48
M.T (%)	12.5	12.5	11.0	12.5	12.5	12.5	12.5	12.5	12.5	12.5	12.5	12.5	12.5				
TYPE	Seamless													LSAW with 100% Radiography			
MOC	ASTM A 106 Gr. B													API 5L Gr. B			
Ends	PE				BE												
Fittings Data																	
Size(in)	0.5	0.75	1	1.5	2	3	4	6	8	10	12	14	16	18	20	22	24
TYPE	Socket Weld				Butt Weld												
Rating	# 9000				160	160	80	80	60	40	40	40	40	40	40	40	40
MOC	ASTM A 105 U.N.O				ASTM A 234 Gr. WPB, Seamless U.N.O									ASTM A234 Gr.WPB,Welded U.N.O			
Elbow	ASMEB16.11				ASME B 16.9									ASME B 16.9			
Tee	ASMEB16.11				ASME B 16.9									ASME B 16.9			
Red.	ASMEB16.11				ASME B 16.9									ASME B 16.9			
Cap	ASMEB16.11				ASME B 16.9									ASME B 16.9			
Coupl	ASMEB16.11				ASME B 16.9									ASME B 16.9			
Plug	ASMEB16.11				ASME B 16.9									ASME B 16.9			
Union																	
Elbowlet	MSS SP 97,ASTM A 105				MSS SP 97,ASTM A 105									MSS SP 97,ASTM A 105			
Sockolet	MSS SP 97,ASTM A 105				MSS SP 97,ASTM A 105									MSS SP 97,ASTM A 105			
Weldolet	MSS SP 97,ASTM A 105				MSS SP 97,ASTM A 105									MSS SP 97,ASTM A 105			
Nipple	MSS SP 97,Same as pipe				MOC Same as pipe									MOC Same as pipe			
Swage	MSS SP 95,Same as pipe				MSS SP 95,MOC Same as pipe									MSS SP 95,MOC Same as pipe			
Flange																	
Size(in)	0.5	0.75	1	1.5	2	3	4	6	8	10	12	14	16	18	20	22	24
TYPE	SW				WN												
MOC	ASTM A 105				ASTM A 105												
FACE	RF-Serrated Finished				RF, Serrated Finished												
STD.	ASME B 16.5				ASME B 16.5, But welding ends as per ASME B 16.25												
Spectacle Blind/Spacer Blinds																	
Size(in)	0.5	0.75	1	1.5	2	3	4	6	8	10	12	14	16	18	20	22	24
MOC	ASTM A 105																
Spectacle	ASME B 16.48				ASME B 16.48							Spacer and blind as per ASME B 16.48					
Mechanical Joints																	
Stud Bolts	ASTM A 193 Gr. B7M				ASTM A 193 Gr. B7M												
Hex Nuts	ASTM A 194 Gr. 2HM				ASTM A 194 Gr. 2HM												
Gasket	ASME B 16.21,Flat Ring,1.58mm,CNAF				ASME B 16.21,Flat Ring,1.58mm,CNAF												

Pressure-Temperature Rating				Maximum Hydrostatic Pressure	
Temp.,Deg F	Pressure, PSI	Temp,Deg C	Pressure, Kg/cm2	Pressure, psig	Pres.,Kg/cm2g
(-) 4 to 100	285	(-) 20 to 38	20	450 psig	31.6 Kg/cm2
200	260	93	18.3	Limited by Flange considereing flange as the weakest joint in piping system	
300	230	149	16.2		
400	200	204	14.1		
500	170	260	11.9		

Notes Releted to Pipe,Fittings,Flanges,Gasket and Stud Bolts -Nuts

1. Welded fittings shall be 100% radiographed.
2. All alloy steel stud bolts and nuts shall be hot dip galvanized or electrogalvanized with minimum coating as per spec.
3. Spectacle blinds and spacer sizes and rating that are not available in ASME B 16.48 shall be as per manufacturer standard. Design shall be submitted to company for review and approval.
4. All pipe thread shall be as per ASME B 1.20.1
5. Weld Joint Factor for welded pipe shall be as per ASME B 31.3
6. PMS to be read in conjuction with FS 2004 A and all the requirement of MR-01-75/ISO-15156-1/2/3 to complied.
7. Two jackscrew, 180 degree apart shall be provided in one of the flanges for all orifice flange and specified spectacle blinds.
8. In instrument gas lines - Use this specification for main Header and SS316L piping for Sub Header. Presssure-temperature rating of SS316L shall compatible to this piping class and both shall comply all the requirement of MR-01-75/ISO-15156-1/2/3.
9. In cae calculated thickness is more than thickness of schedule of XXS for small bore piping (1/2"), reduce MT and use XXS only.

Offshore Design Section Engineering Services IS0-9001:2000	**PIPING MATERIAL SPECIFICATION**				Sheet No.	**2 of 2**
	Piping Class	Material	C.A	Spec.No	Revision: 2	
	A1N	# 150	CS-NACE	6mm	2004A,Rev 9	Page No. 24
	Design Code: ASME B 31.3 and other applicable Code NACE-MR-01-75/ISO-15156-1/2/3					
	Service:	Corrosive HydroCarbon Service-Sour Liquid and Vapour.				
	Instrument Gas Header including 1st Bolck Valve					

Branch Table as per API RP 14E

LEGEND	
*	Sockolet
W	Weldolet
T	TEE

Run Pipe	≤ 1	1-1.5	2	3	4	6	8	10	12	14	16	18	20	24	30
≤ 1	T														
1-1.5	T	T													
2	*	*	T												
3	*	*	T	T											
4	*	*	T	T	T										
6	*	*	W	T	T	T									
8	*	*	W	W	T	T	T								
10	*	*	W	W	W	T	T	T							
12	*	*	W	W	W	T	T	T	T						
14	*	*	W	W	W	W	T	T	T	T					
16	*	*	W	W	W	W	T	T	T	T	T				
18	*	*	W	W	W	W	W	T	T	T	T	T			
20	*	*	W	W	W	W	W	T	T	T	T	T	T		
24	*	*	W	W	W	W	W	W	T	T	T	T	T	T	
30	*	*	W	W	W	W	W	W	W	W	T	T	T	T	T

	≤ 1	1-1.5	2	3	4	6	8	10	12	14	16	18	20	24	30
	Branch Pipe														

Valve Data

Size(in)	0.5	0.75	1	1.5	2	3	4	6	8	10	12	14	16	18	20	22	24
Gate Valve																	
TAG	VG 45,SW				VG 65,FLANGED												
Rating	# 800				# 150,RF												
Plug Valve																	
TAG																	
Rating																	
Ball Valve																	
TAG	VB 45,SW and VB 107,SW (Note-5)				VB 65, Lever Operated							VB **, Gear Operated					
Rating	# 800				# 150, RF												
Globe Valve																	
TAG	VGL 45,SW				VGL 65												
Rating	# 800				# 150, RF												
Check Valve																	
TAG	VC 45,SW,Lift Check				VC 65,Swing Check/ VC 82 (Wafer Check, Note -1)												
Rating	# 800				# 150, RF												
Needle Valve																	
TAG	VN 9,SW																
Rating	# 800																
Butter Fly Valve																	
TAG																	
Rating																	

Notes Releted to Valve and Brach Connection

1. Wafer check valve to be avoided as far as possible; unless the avaliable space constraint does not allow normal check valve . The contractor to take approvel for use of wafer check Valve during pipe routing after extablishing the space constraint.
2. Wafer type Butter Fly Valve may be used only in fire water(Clean water) service.
3. PMS to be read in conjuction with FS 2004 A.
4. Maximum temperature limit for all Ball Valve shall be 121 Degree C
5. In instrument gas lines - Use VB -45 for main Header and VB-107 for Sub Header. The MOC of VB-107 shall be SS-316L as per VMS and comply all the requirement of MR-01-75/ISO-15156-1/2/3.

Revision	Date	Description	Prepared By	Reviewed By	Approved By
Revision: 2	15.01.16	Issued For Bid	PS	AKM	SJ

	Offshore Design Section Engineering Services IS0-9001:2000				**PIPING MATERIAL SPECIFICATION**									Sheet No.		**1 of 2**	
					Piping Class				Material			C.A	Spec.No			Revision: 2	
					B1N		# 300		CS-NACE			6mm	2004A,Rev 9			Page No.	25
					Design Code: ASME B 31.3 and other applicable Code NACE-MR-01-75/ISO-15156-1/2/3												
					Service	Corrosive HydroCarbon Service-Sour Liquid and Vapour.											
Pipe Data	ASME B 36.10																
Size(in)	0.5	0.75	1	1.5	2	3	4	6	8	10	12	14	16	18	20	22	24
O.D.mm	21.3	26.7	33.4	48.3	60.3	88.9	114.3	168.3	219.1	273.1	323.9	355.6	406.4	457.2	508	558.8	609.6
Sch.	XXS	XXS	XXS	XXS	160	160	120	XS	XS	60	60	60	60	60	60	60	60
WTmm	7.47	7.82	9.09	10.16	8.74	11.12	11.12	10.97	12.70	12.70	14.27	15.09	16.66	19.05	20.62	22.22	24.61
M.T (%)	12.5	12.5	5.0	5.0	12.5	12.5	12.5	12.5	12.5	12.5	12.5	12.5	12.5				
TYPE	Seamless													LSAW with 100% Radiography			
MOC	ASTM A 106 Gr. B													API 5L Gr. B			
Ends	PE				BE												
Fittings Data																	
Size(in)	0.5	0.75	1	1.5	2	3	4	6	8	10	12	14	16	18	20	22	24
TYPE	Socket Weld				Butt Weld												
Rating	# 9000				160	160	120	XS	XS	60	60	60	60	60	60	60	60
MOC	ASTM A 105 U.N.O				ASTM A 234 Gr. WPB, Seamless U.N.O									ASTM A234 Gr.WPB,Welded U.N.O			
Elbow	ASMEB16.11				ASME B 16.9									ASME B 16.9			
Tee	ASMEB16.11				ASME B 16.9									ASME B 16.9			
Red.	ASMEB16.11				ASME B 16.9									ASME B 16.9			
Cap	ASMEB16.11				ASME B 16.9									ASME B 16.9			
Coupl	ASMEB16.11				ASME B 16.9									ASME B 16.9			
Plug	ASMEB16.11				ASME B 16.9									ASME B 16.9			
Union																	
Elbowlet	MSS SP 97,ASTM A 105				MSS SP 97,ASTM A 105									MSS SP 97,ASTM A 105			
Sockolet	MSS SP 97,ASTM A 105				MSS SP 97,ASTM A 105									MSS SP 97,ASTM A 105			
Weldolet	MSS SP 97,ASTM A 105				MSS SP 97,ASTM A 105									MSS SP 97,ASTM A 105			
Nipple	MSS SP 97,Same as pipe				MOC Same as pipe									MOC Same as pipe			
Swage	MSS SP 95,Same as pipe				MSS SP 95,MOC Same as pipe									MSS SP 95 or as applicable,MOC Same as pipe			
Flange																	
Size(in)	0.5	0.75	1	1.5	2	3	4	6	8	10	12	14	16	18	20	22	24
TYPE	SW				WN												
MOC	ASTM A 105				ASTM A 105												
FACE	RF-Smooth Finished				RF, Smooth Finished												
STD.	ASME B 16.5				ASME B 16.5, But welding ends as per ASME B 16.25												
Spectacle Blind/Spacer Blinds																	
Size(in)	0.5	0.75	1	1.5	2	3	4	6	8	10	12	14	16	18	20	22	24
MOC	ASTM A 105																
Spectacle	ASME B 16.48				ASME B 16.48							Spacer and blind as per ASME B 16.48					
Mechanical Joints																	
Stud Bolts	ASTM A 193 Gr. B7M				ASTM A 193 Gr. B7M												
Hex Nuts	ASTM A 194 Gr. 2HM				ASTM A 194 Gr. 2HM												
Gasket	B 16.20,4.5mm, SS Spiral wound with CNAF filler				ASME B 16.20,4.5mm, SS Spiral wound with CNAF filler												

Pressure-Temperature Rating				Maximum Hydrostatic Pressure	
Temp.,Deg F	Pressure, PSI	Temp,Deg C	Pressure, Kg/cm2	Pressure, psig	Pres.,Kg/cm2g
(-) 4 to 100	740	(-) 20 to 38	52	1125 psig	79 Kg/cm2
200	675	93	47.5	Limited by Flange considereing flange as the weakest joint in piping system	
300	655	149	46		
400	635	204	44.6		
500	600	260	44.2		

Notes Releted to Pipe,Fittings,Flanges,Gasket and Stud Bolts -Nuts

1. Welded fittings shall be 100% radiographed.

2.All alloy steel stud bolts and nuts shall be hot dip galvanized or electrogalvanized with minimum coating as per spec.

3. Spectacle blinds and spacer sizes and rating that are not available in ASME B 16.48 shall be as per manufacturer standard. Design shall be submitted to company for review and approval.

4. All pipe thread shall be as per ASME B 1.20.1

5. Weld Joint Factor for welded pipe shall be as per ASME B 31.3

6. PMS to be read in conjuction with FS 2004 A and all the requirement of MR-01-75/ISO-15156-1/2/3 to complied.

7. Two jackscrew, 180 degree apart shall be provided in one of the flanges for all orifice flange and specified spectacle blinds.

8. In instrument gas lines - Use this specification for main Header and SS316L piping for Sub Header. Presssure-temperature rating of SS316L shall compatible to this piping class and both shall comply all the requirement of MR-01-75/ISO-15156-1/2/3.

9. In cae calculated thickness is more than thickness of schedule of XXS for small bore piping (1/2"), reduce MT and use XXS only.

Offshore Design Section Engineering Services IS0-9001:2000	**PIPING MATERIAL SPECIFICATION**				Sheet No.	**2 of 2**
	Piping Class	Material	C.A	Spec.No	Revision: 2	
	B1N	# 300	CS-NACE	6mm	2004A,Rev 9	Page No. 26
	Design Code: ASME B 31.3 and other applicable Code NACE-MR-01-75/ISO-15156-1/2/3					
	Service:	Corrosive HydroCarbon Service-Sour Liquid and Vapour.				
	0					

Branch Table as per API RP 14E

LEGEND	
*	Sockolet
W	Weldolet
T	TEE

Run Pipe	≤ 1	1-1.5	2	3	4	6	8	10	12	14	16	18	20	24	30
≤ 1	T														
1-1.5	T	T													
2	*	*	T												
3	*	*	T	T											
4	*	*	T	T	T										
6	*	*	W	T	T	T									
8	*	*	W	W	T	T	T								
10	*	*	W	W	W	T	T	T							
12	*	*	W	W	W	T	T	T	T						
14	*	*	W	W	W	W	T	T	T	T					
16	*	*	W	W	W	W	T	T	T	T	T				
18	*	*	W	W	W	W	W	T	T	T	T	T			
20	*	*	W	W	W	W	W	T	T	T	T	T	T		
24	*	*	W	W	W	W	W	W	T	T	T	T	T	T	
30	*	*	W	W	W	W	W	W	W	W	T	T	T	T	T

	≤ 1	1-1.5	2	3	4	6	8	10	12	14	16	18	20	24	30		
	Branch Pipe																
Valve Data																	
Size(in)	0.5	0.75	1	1.5	2	3	4	6	8	10	12	14	16	18	20	22	24
Gate Valve																	
TAG	VG 45,SW				VG 69,FLANGED												
Rating	# 800				# 300,RF												
Plug Valve																	
TAG																	
Rating																	
Ball Valve																	
TAG	VB 45,SW and VB 107,SW (Note-5)				VB 69, Lever Operated							VB **, Gear Operated					
Rating	# 800				# 300, RF												
Globe Valve																	
TAG	VGL 45,SW				VGL 69												
Rating	# 800				# 300, RF												
Check Valve																	
TAG	VC 45,SW,Lift Check				VC 69,Swing Check/ VC 89 (Wafer Check, Note -1)												
Rating	# 800				# 300, RF												
Needle Valve																	
TAG	VN 9,SW																
Rating	# 800																
Butter Fly Valve																	
TAG																	
Rating																	

Notes Releted to Valve and Brach Connection

1. Wafer check valve to be avoided as far as possible; unless the avaliable space constraint does not allow normal check valve . The contractor to take approvel for use of wafer check Valve during pipe routing after extablishing the space constraint.
2. Wafer type Butter Fly Valve may be used only in fire water(Clean water) service.
3. PMS to be read in conjuction with FS 2004 A.
4. Maximum temperature limit for all Ball Valve shall be 121 Degree C
5. In instrument gas lines - Use VB -45 for main Header and VB-107 for Sub Header. The MOC of VB-107 shall be SS 316L as per VMS and comply all the requirement of MR-01-75/ISO-15156-1/2/3.

Revision	Date	Description	Prepared By	Reviewed By	Approved By
Revision: 2	15.01.16	Issued For Bid	PS	AKM	SJ

	Offshore Design Section Engineering Services IS0-9001:2000				**PIPING MATERIAL SPECIFICATION**									Sheet No.		**1 of 2**	
					Piping Class				Material			C.A	Spec.No			Revision: 2	
					D1N		# 600		CS-NACE			6mm	2004A,Rev 9			Page No.	27
					Design Code: ASME B 31.3 and other applicable Code NACE-MR-01-75/ISO-15156-1/2/3												
					Service: Corrosive HydroCarbon Service-Sour Liquid and Vapour.												
					Instrument Gas Header including 1st Bolck Valve												
Pipe Data	ASME B 36.10																
Size(in)	0.5	0.75	1	1.5	2	3	4	6	8	10	12	14	16	18	20	22	24
O.D.mm	21.3	26.7	33.4	48.3	60.3	88.9	114.3	168.3	219.1	273	323.9	355.6	406.4	457.2	508	558.8	609.6
Sch.	XXS	XXS	XXS	XXS	XXS	160	160	120	120	100	100	100	100	100	100	100	100
WTmm	7.47	7.82	9.09	10.16	11.07	11.12	13.49	14.27	18.26	18.26	21.44	23.82	26.19	29.36	32.54	34.92	38.89
M.T (%)	12.5	12.5	5.0	6.0	12.5	12.5	12.5	12.5	12.5	12.5	12.5	12.5	12.5				
TYPE	Seamless													LSAW with 100% Radiography			
MOC	ASTM A 106 Gr. B													API 5L Gr. B			
Ends	PE				BE												
Fittings Data																	
Size(in)	0.5	0.75	1	1.5	XXS	160	160	120	120	100	100	100	100	18	20	22	24
TYPE	Socket Weld				Butt Weld												
Rating	# 9000				XXS	160	160	120	120	120	120	100	100	100	100	100	100
MOC	ASTM A 105 U.N.O				ASTM A 234 Gr. WPB, Seamless U.N.O									ASTM A234 Gr.WPB,Welded U.N.O			
Elbow	ASMEB16.11				ASME B 16.9									ASME B 16.9			
Tee	ASMEB16.11				ASME B 16.9									ASME B 16.9			
Red.	ASMEB16.11				ASME B 16.9									ASME B 16.9			
Cap	ASMEB16.11				ASME B 16.9									ASME B 16.9			
Coupl	ASMEB16.11				ASME B 16.9									ASME B 16.9			
Plug	ASMEB16.11				ASME B 16.9									ASME B 16.9			
Union																	
Elbowlet	MSS SP 97,ASTM A 105				MSS SP 97,ASTM A 105									MSS SP 97,ASTM A 105			
Sockolet	MSS SP 97,ASTM A 105				MSS SP 97,ASTM A 105									MSS SP 97,ASTM A 105			
Weldolet	MSS SP 97,ASTM A 105				MSS SP 97,ASTM A 105									MSS SP 97,ASTM A 105			
Nipple	MSS SP 97,Same as pipe				MOC Same as pipe									MOC Same as pipe			
Swage	MSS SP 95,Same as pipe				MSS SP 95,MOC Same as pipe									MSS SP 95,MOC Same as pipe			
Flange																	
Size(in)	0.5	0.75	1	1.5	2	3	4	6	8	10	12	14	16	18	20	22	24
TYPE	SW				WN												
MOC	ASTM A 105				ASTM A 105												
FACE	RF-Smooth Finished				RF, Smooth Finished												
STD.	ASME B 16.5				ASME B 16.5, But welding ends as per ASME B 16.25												
Spectacle Blind/Spacer Blinds																	
Size(in)	0.5	0.75	1	1.5	2	3	4	6	8	10	12	14	16	18	20	22	24
MOC	ASTM A 105																
Spectacle	ASME B 16.48				ASME B 16.48							Spacer and blind as per ASME B 16.48					
Mechanical Joints																	
Stud Bolt	ASTM A 193 Gr. B7M				ASTM A 193 Gr. B7M												
Hex Nuts	ASTM A 194 Gr. 2HM				ASTM A 194 Gr. 2HM												
Gasket	B 16.20,4.5mm, SS Spiral wound with CNAF filler				ASME B 16.20,4.5mm, SS Spiral wound with CNAF filler												

Pressure-Temperature Rating				Maximum Hydrostatic Pressure	
Temp.,Deg F	Pressure, PSI	Temp,Deg C	Pressure, Kg/cm2	Pressure, psig	Pres.,Kg/cm2g
(-) 4 to 100	1480	(-) 20 to 38	104	2225 psig	157 Kg/cm2
200	1360	93	95.61	Limited by Flange considereing flange as the weakest joint in piping system	
300	1310	149	92.1		
400	1265	204	88.94		
500	1205	260	84.72		

Notes Releted to Pipe,Fittings,Flanges,Gasket and Stud Bolts -Nuts

1. Welded fittings shall be 100% radiographed.
2. All alloy steel stud bolts and nuts shall be hot dip galvanized or electrogalvanized with minimum coating as per spec.
3. Spectacle blinds and spacer sizes and rating that are not available in ASME B 16.48 shall be as per manufacturer standard. Design shall be submitted to company for review and approval.
4. Weld Joint Factor for welded pipe shall be as per ASME B 31.3
5. All pipe thread shall be as per ASME B 1.20.1
6. PMS to be read in conjuction with FS 2004 A and all the requirement of MR-01-75/ISO-15156-1/2/3 to complied.
7. Two jackscrew, 180 degree apart shall be provided in one of the flanges for all orifice flange and specified spectacle blinds.
8. In instrument gas lines - Use this specification for main Header and SS316L piping for Sub Header. Presssure-temperature rating of SS316L shall compatible to this piping class and both shall comply all the requirement of MR-01-75/ISO-15156-1/2/3.
9. In cae calculated thickness is more than thickness of schedule of XXS for small bore piping (1/2"), reduce MT and use XXS only.

Offshore Design Section Engineering Services IS0-9001:2000	**PIPING MATERIAL SPECIFICATION**				Sheet No.	**2 of 2**
	Piping Class		Material	C.A	Spec.No	Revision: 2
	D1N	# 600	CS-NACE	6mm	2004A,Rev 9	Page No. 28
	Design Code: ASME B 31.3 and other applicable Code NACE-MR-01-75/ISO-15156-1/2/3					
	Service: Corrosive HydroCarbon Service-Sour Liquid and Vapour.					

Branch Table as per API RP 14E

LEGEND	
*	Sockolet
W	Weldolet
T	TEE

Run Pipe	≤ 1	1-1.5	2	3	4	6	8	10	12	14	16	18	20	24	30
≤ 1	T														
1-1.5	T	T													
2	*	*	T												
3	*	*	T	T											
4	*	*	T	T	T										
6	*	*	W	T	T	T									
8	*	*	W	W	T	T	T								
10	*	*	W	W	W	T	T	T							
12	*	*	W	W	W	T	T	T	T						
14	*	*	W	W	W	W	T	T	T	T					
16	*	*	W	W	W	W	T	T	T	T	T				
18	*	*	W	W	W	W	W	T	T	T	T	T			
20	*	*	W	W	W	W	W	T	T	T	T	T	T		
24	*	*	W	W	W	W	W	W	T	T	T	T	T	T	
30	*	*	W	W	W	W	W	W	W	W	T	T	T	T	T

Branch Pipe

Valve Data

Size(in)	0.5	0.75	1	1.5	2	3	4	6	8	10	12	14	16	18	20	22	24
Gate Valve																	
TAG	VG 45,SW				VG 71,FLANGED												
Rating	# 800				# 600,RF												
Plug Valve																	
TAG																	
Rating																	
Ball Valve																	
TAG	B 45,SW and VB 107,SW (Note-				VB 71, Lever Operated							VB **, Gear Operated					
Rating	# 800				# 600, RF												
Globe Valve																	
TAG	VGL 45,SW				VGL 71												
Rating	# 800				# 600, RF												
Check Valve																	
TAG	VC 45,SW,Lift Check				VC 71,Swing Check												
Rating	# 800				# 600, RF												
Needle Valve																	
TAG	VN 9,SW																
Rating	# 800																
Butter Fly Valve																	
TAG																	
Rating																	

Notes Releted to Valve and Brach Connection

1. Wafer check valve to be avoided as far as possible; unless the avaliable space constraint does not allow normal check valve . The contractor to take approvel for use of wafer check Valve during pipe routing after extablishing the space constraint.
2. PMS to be read in conjuction with FS 2004 A.
3. Maximum temperature limit for all Ball Valve shall be 121 Degree C
4. In instrument gas lines - Use VB -45 for main Header and VB-107 for Sub Header. The MOC of VB-107 shall be SS 316L as per VMS and comply all the requirement of MR-01-75/ISO-15156-1/2/3.

Revision	Date	Description	Prepared By	Reviewed By	Approved By
Revision: 2	15.01.16	Issued For Bid	PS	AKM	SJ

	Offshore Design Section Engineering Services IS0-9001:2000				**PIPING MATERIAL SPECIFICATION**									Sheet No.		**1 of 2**	
					Piping Class				Material			C.A	Spec.No			Revision: 2	
					E1N	# 900			CS-NACE			6mm	2004A,Rev 9			Page No.	29
					Design Code: ASME B 31.3 and other applicable Code NACE-MR-01-75/ISO-15156-1/2/3												
					Service Corrosive HydroCarbon Service-Sour Liquid and Vapour.												
Pipe Data	ASME B 36.10																
Size(in)	0.5	0.75	1	1.5	2	3	4	6	8	10	12	14	16	18	20	22	24
O.D.mm	21.3	26.7	33.4	48.3	60.3	88.9	114.3	168.3	219.1	273.1	323.9	355.6	406.4	457.2	508	558.8	609.6
Sch.	XXS	XXS	XXS	XXS	XXS	XXS	XXS	160	140	140	140	140	140	120	120	120	120
WTmm	7.47	7.82	9.09	10.16	11.07	15.24	17.12	18.26	20.63	25.40	28.57	31.75	36.53	34.92	38.10	41.27	46.02
M.T (%)	12.5	12.5	5.0	6.0	12.5	12.5	12.5	12.5	12.5	12.5	12.5	12.5	12.5				
TYPE	Seamless													LSAW with 100% Radiography			
MOC	ASTM A 106 Gr. B													API 5L Gr. B			
Ends	PE				BE												
Fittings Data																	
Size(in)	0.5	0.75	1	1.5	2	3	4	6	8	10	12	14	16	18	20	22	24
TYPE	Socket Weld				Butt Weld												
Rating	# 9000				XXS	XXS	XXS	160	140	140	140	140	140	120	120	120	120
MOC	ASTM A 105 U.N.O				ASTM A 234 Gr. WPB, Seamless U.N.O									ASTM A234 Gr.WPB,Welded U.N.O			
Elbow	ASMEB16.11				ASME B 16.9									ASME B 16.9			
Tee	ASMEB16.11				ASME B 16.9									ASME B 16.9			
Red.	ASMEB16.11				ASME B 16.9									ASME B 16.9			
Cap	ASMEB16.11				ASME B 16.9									ASME B 16.9			
Coupl	ASMEB16.11				ASME B 16.9									ASME B 16.9			
Plug	ASMEB16.11				ASME B 16.9									ASME B 16.9			
Union																	
Elbowlet	MSS SP 97,ASTM A 105				MSS SP 97,ASTM A 105									MSS SP 97,ASTM A 105			
Sockolet	MSS SP 97,ASTM A 105				MSS SP 97,ASTM A 105									MSS SP 97,ASTM A 105			
Weldolet	MSS SP 97,ASTM A 105				MSS SP 97,ASTM A 105									MSS SP 97,ASTM A 105			
Nipple	MSS SP 97,Same as pipe				MOC Same as pipe									MOC Same as pipe			
Swage	MSS SP 95,Same as pipe				MSS SP 95,MOC Same as pipe									MSS SP 95,MOC Same as pipe			
Flange																	
Size(in)	0.5	0.75	1	1.5	2	3	4	6	8	10	12	14	16	18	20	22	24
TYPE	SW				WN												
MOC	ASTM A 105				ASTM A 105												
FACE	RTJ-Note 9				RTJ, Note 9												
STD.	ASME B 16.5				ASME B 16.5, But welding ends as per ASME B 16.25												
Spectacle Blind/Spacer Blinds																	
Size(in)	0.5	0.75	1	1.5	2	3	4	6	8	10	12	14	16	18	20	22	24
MOC	ASTM A 105																
Spectacle	ASME B 16.48				ASME B 16.48							Spacer and blind as per ASME B 16.48					
Mechanical Joints																	
Stud Bolts	ASTM A 193 Gr. B7M				ASTM A 193 Gr. B7M												
Hex Nuts	ASTM A 194 Gr. 2HM				ASTM A 194 Gr. 2HM												
Gasket	B 16.20,OCT ring of Soft Iron with Max. 90BHN				ASME B 16.20,OCT ring of Soft Iron with Max. Hardness of 90BHN												

Pressure-Temperature Rating				Maximum Hydrostatic Pressure	
Temp.,Deg F	Pressure, PSI	Temp,Deg C	Pressure, Kg/cm2	Pressure, psig	Pres.,Kg/cm2g
(-) 4 to 100	2220	(-) 20 to 38	156	3350 psig	236 Kg/cm2
200	2035	93	143.07	Limited by Flange considereing flange as the weakest joint in piping system	
300	1965	149	138.2		
400	1900	204	133.6		
500	1810	260	127.2		

Notes Releted to Pipe,Fittings,Flanges,Gasket and Stud Bolts -Nuts

1. Welded fittings shall be 100% radiographed.
2.All alloy steel stud bolts and nuts shall be hot dip galvanized or electrogalvanized with minimum coating as per spec.
3. Spectacle blinds and spacer sizes and rating that are not available in ASME B 16.48 shall be as per manufacturer standard. Design shall be submitted to company for review and approval.
4. All pipe thread shall be as per ASME B 1.20.1
5. PMS to be read in conjuction with FS 2004 A.
6. Two jackscrew, 180 degree apart shall be provided in one of the flanges for all orifice flange and WNRTJ flanges above 3" size and specified spectacle blind assemblies.
7. Weld Joint Factor for welded pipe shall be as per ASME B 31.3
8. Gasket Contact Surface shall have maximum roughness of 63AARH
9. Minimum RTJ groove hardness shall be 120BHN
10. Octagonal (OCT) ring shall be Hot Dip Galvanized or electrogalvaized.
11. In cae calculated thickness is more than thickness of schedule of XXS for small bore piping (1/2"), reduce MT and use XXS only.

Offshore Design Section Engineering Services IS0-9001:2000	PIPING MATERIAL SPECIFICATION				Sheet No.	2 of 2
	Piping Class	Material	C.A	Spec.No	Revision: 2	
	E1N	# 900	CS-NACE	6mm	2004A,Rev 9	Page No. 30
	Design Code: ASME B 31.3 and other applicable Code NACE-MR-01-75/ISO-15156-1/2/3					
	Service:	Corrosive HydroCarbon Service-Sour Liquid and Vapour.				
	0					

Branch Table as per API RP 14E

LEGEND	
*	Sockolet
W	Weldolet
T	TEE

Run Pipe	≤ 1	1-1.5	2	3	4	6	8	10	12	14	16	18	20	24	30
≤ 1	T														
1-1.5	T	T													
2	*	*	T												
3	*	*	T	T											
4	*	*	T	T	T										
6	*	*	W	T	T	T									
8	*	*	W	W	T	T	T								
10	*	*	W	W	W	T	T	T							
12	*	*	W	W	W	T	T	T	T						
14	*	*	W	W	W	W	T	T	T	T					
16	*	*	W	W	W	W	T	T	T	T	T				
18	*	*	W	W	W	W	W	T	T	T	T	T			
20	*	*	W	W	W	W	W	T	T	T	T	T	T		
24	*	*	W	W	W	W	W	W	T	T	T	T	T	T	
30	*	*	W	W	W	W	W	W	W	W	T	T	T	T	T

Valve Data

	Branch Pipe																
Size(in)	0.5	0.75	1	1.5	2	3	4	6	8	10	12	14	16	18	20	22	24
Gate Valve																	
TAG	VG 47,SW				VG 73,FLANGED												
Rating	# 1500				# 900,RF												
Plug Valve																	
TAG																	
Rating																	
Ball Valve																	
TAG	Use Gate Valve, VG 47				VB 73, Lever Operated							VB **, Gear Operated					
Rating	# 1500				# 900, RTJ												
Globe Valve																	
TAG	VGL 47,SW				VGL 73												
Rating	# 1500				# 900, RTJ												
Check Valve																	
TAG	VC 47,SW,Lift Check				VC 73,Swing Check												
Rating	# 1500				# 900, RTJ												
Needle Valve																	
TAG	VN 10,SW																
Rating	# 1500																
Butter Fly Valve																	
TAG																	
Rating																	

Notes Releted to Valve and Brach Connection

1. PMS to be read in conjuction with FS 2004 A.
2. Maximum temperature limit for all Ball Valve shall be 121 Degree C

Revision: 2	15.01.16	Issued For Bid	PS	AKM	SJ
Revision	Date	Description	Prepared By	Reviewed By	Approved By

ONGC	Offshore Design Section Engineering Services IS0-9001:2000				**PIPING MATERIAL SPECIFICATION**									Sheet No.		**1 of 2**	
					Piping Class				Material		C.A		Spec.No			Revision: 0	
					F1N		# 1500		CS-NACE		6mm		2004A,Rev 9			Page No.	31
					Design Code: ASME B 31.3 and other applicable Code NACE-MR-01-75/ISO-15156-1/2/3												
					Service	Corrosive HydroCarbon Service-Sour Liquid and Vapour.											

Pipe Data	ASME B 36.10																
Size(in)	0.5	0.75	1	1.5	2	3	4	6	8	10	12	14	16	18	20	22	24
O.D.mm	21.3	26.7	33.4	48.3	60.3	88.9	114	168	219	273.1	323.9	355.6	406.4	457.2	508	558.8	609.6
Sch.	XXS	XXS	XXS	XXS	XXS	XXS	XXS	XXS	160	160	160	160	160	160	160	160	160
WTmm	7.47	7.82	9.09	10.16	11.07	15.24	17.12	21.95	23.01	28.57	33.32	35.71	40.49	45.24	50.01	53.97	59.54
M.T (%)	12.5	12.5	12.5	12.5	12.5	12.5	12.5	12.5	7.0	12.0	12.5	12.5	12.5				
TYPE	Seamless													LSAW with 100% Radiography			
MOC	API 5L Gr, X60 PSL-2													API 5L Gr, X60 PSL-2			
Ends	PE				BE												
Fittings Data																	
Size(in)	0.5	0.75	1	1.5	2	3	4	6	8	10	12	14	16	18	20	22	24
TYPE	Socket Weld				Butt Weld												
Rating	# 9000				XXS	XXS	XXS	XXS	XXS	XXS	160	160	160	160	160	160	160
MOC	ASTM A 694 F60				ASTM A 860 WPHY 60, Seamless U.N.O									ASTM A860 WPHY 60,Welded U.N.O			
Elbow	ASMEB16.11				ASME B 16.9									ASME B 16.9			
Tee	ASMEB16.11				ASME B 16.9									ASME B 16.9			
Red.	ASMEB16.11				ASME B 16.9									ASME B 16.9			
Cap	ASMEB16.11				ASME B 16.9									ASME B 16.9			
Coupl	ASMEB16.11				ASME B 16.9									ASME B 16.9			
Plug	ASMEB16.11				ASME B 16.9									ASME B 16.9			
Union																	
Elbowlet	MSS SP 97,ASTM A 694 F60				MSS SP 97,ASTM A 694 F60									MSS SP 97,ASTM A 694 F60			
Sockolet	MSS SP 97,ASTM A 694 F60				MSS SP 97,ASTM A 694 F60									MSS SP 97,ASTM A 694 F60			
Weldolet	MSS SP 97,ASTM A 694 F60				MSS SP 97,ASTM A 694 F60									MSS SP 97,ASTM A 694 F60			
Nipple	MSS SP 97,Same as pipe				MOC Same as pipe									MOC Same as pipe			
Swage	MSS SP 95,Same as pipe				MSS SP 95,MOC Same as pipe									MSS SP 95,MOC Same as pipe			
Flange																	
Size(in)	0.5	0.75	1	1.5	2	3	4	6	8	10	12	14	16	18	20	22	24
TYPE	SW				WN												
MOC	ASTM A 694 F60				ASTM A 694 F60												
FACE	RTJ-Note 7				RTJ, Note 7												
STD.	ASME B 16.5				ASME B 16.5, But welding ends as per ASME B 16.25												
Spectacle Blind/Spacer Blinds																	
Size(in)	0.5	0.75	1	1.5	2	3	4	6	8	10	12	14	16	18	20	22	24
MOC	ASTM A 694 F60																
Spectacle	ASME B 16.48				ASME B 16.48							Spacer and blind as per ASME B 16.48					
Mechanical Joints																	
Stud Bolt	ASTM A 193 Gr. B7M				ASTM A 193 Gr. B7M												
Hex Nuts	ASTM A 194 Gr. 2HM				ASTM A 194 Gr. 2HM												
Gasket	B 16.20,OCT ring of Soft Iron with Max. 90BHN				ASME B 16.20,OCT ring of Soft Iron with Max. Hardness of 90BHN												

Pressure-Temperature Rating				Maximum Hydrostatic Pressure	
Temp.,Deg F	Pressure, PSI	Temp,Deg C	Pressure, Kg/cm2	Pressure, psig	Pres.,Kg/cm2g
(-) 4 to 100	3702.81	(-) 20 to 38	260.33	5554.22 psig	390.50 Kg/cm2
122	3634.65	50	255.54	Limited by Flange considereing flange as the weakest joint in piping system	
212	3379.38	100	237.6		
302	3269.15	150	229.85		
392	3176.33	200	223.32		

Notes Releted to Pipe,Fittings,Flanges,Gasket and Stud Bolts -Nuts

1. Welded fittings shall be 100% radiographed.
2.All alloy steel stud bolts and nuts shall be hot dip galvanized or electrogalvanized with minimum coating as per spec.
3. Spectacle blinds and spacer sizes and rating that are not available in ASME B 16.48 shall be as per manufacturer standard. Design shall be submitted to company for review and approval.
4. All pipe thread shall be as per ASME B 1.20.1
5. PMS to be read in conjuction with FS 2004 A.
6. Two jackscrew, 180 degree apart shall be provided in one of the flanges for all orifice flange and WNRTJ flanges above 3" size and specified spectacle
7. Weld Joint Factor for welded pipe shall be as per ASME B 31.3
8. Gasket Contact Surface shall have maximum roughness of 63AARH
9. Minimum RTJ groove hardness shall be 120BHN
10. Octagonal (OCT) ring shall be Hot Dip Galvanized or electrogalvaized.
11. In cae calculated thickness is more than thickness of schedule of XXS for small bore piping (1/2"), reduce MT and use XXS only.

Offshore Design Section Engineering Services IS0-9001:2000	**PIPING MATERIAL SPECIFICATION**				Sheet No.	**2 of 2**	
	Piping Class		Material	C.A	Spec.No	Revision: 0	
	F1N	# 1500	CS-NACE	6mm	2004A,Rev 9	Page No.	32
	Design Code: ASME B 31.3 and other applicable Code NACE-MR-01-75/ISO-15156-1/2/3						
	Service	Corrosive HydroCarbon Service-Sour Liquid and Vapour.					
	0						

Branch Table as per API RP 14E

Run Pipe \ Branch Pipe	≤ 1	1-1.5	2	3	4	6	8	10	12	14	16	18	20	24	30
≤ 1	T														
1-1.5	T	T													
2	*	*	T												
3	*	*	T	T											
4	*	*	T	T	T										
6	*	*	W	T	T	T									
8	*	*	W	W	T	T	T								
10	*	*	W	W	W	T	T	T							
12	*	*	W	W	W	T	T	T	T						
14	*	*	W	W	W	W	T	T	T	T					
16	*	*	W	W	W	W	T	T	T	T	T				
18	*	*	W	W	W	W	W	T	T	T	T	T			
20	*	*	W	W	W	W	W	T	T	T	T	T	T		
24	*	*	W	W	W	W	W	W	T	T	T	T	T	T	
30	*	*	W	W	W	W	W	W	W	W	T	T	T	T	T

LEGEND	
*	Sockolet
W	Weldolet
T	TEE

Valve Data

Size(in)	0.5	0.75	1	1.5	2	3	4	6	8	10	12	14	16	18	20	22	24
Gate Valve																	
TAG	VG 67,SW				VG 273,FLANGED												
Rating	# 2500				# 1500,RF												
Plug Valve																	
TAG																	
Rating																	
Ball Valve																	
TAG	Use Gate Valve, VG 67				VB 273, Lever Operated							VB **, Gear Operated					
Rating	# 2500				# 1500, RTJ												
Globe Valve																	
TAG	VGL 67,SW				VGL 273												
Rating	# 2500				# 1500, RTJ												
Check Valve																	
TAG	VC 67,SW,Lift Check				VC 273,Swing Check												
Rating	# 2500				# 1500, RTJ												
Needle Valve																	
TAG	VN 20,SW																
Rating	# 2500																
Butter Fly Valve																	
TAG																	
Rating																	

Notes Releted to Valve and Brach Connection

1. PMS to be read in conjuction with FS 2004 A.
2. Maximum temperature limit for all Ball Valve shall be 121 Degree C

Revision: 0	15.01.16	Issued For Bid	PS	AKM	SJ
Revision	Date	Description	Prepared By	Reviewed By	Approved By

ONGC	Offshore Design Section Engineering Services IS0-9001:2000				**PIPING MATERIAL SPECIFICATION**									Sheet No.		**1 of 2**	
					Piping Class				Material		C.A	Spec.No				Revision: 0	
					G1N		# 2500		CS-NACE		6mm	2004A,Rev 9				Page No.	33
					Design Code: ASME B 31.3 and other applicable Code NACE-MR-01-75/ISO-15156-1/2/3												
					Service	Corrosive HydroCarbon Service-Sour Liquid and Vapour.											

Pipe Data	ASME B 36.10																
Size(in)	0.5	0.75	1	1.5	2	3	4	6	8	10	12	14	16	18	20	22	24
O.D.mm	21.3	26.7	33.4	48.3	60.3	88.9	114	168	219	273.1	323.9	355.6	406.4	457.2	508	558.8	609.6
Sch.	XXS	XXS	XXS	XXS	XXS	XXS	XXS	XXS	XXS	XXS	160	160	160	160	160	160	160
WTmm	7.47	7.82	9.09	10.16	11.07	15.24	17.12	21.95	22.22	25.40	33.32	35.71	40.40	45.24	50.01	53.97	59.54
M.T (%)	5.0	5.0	5.0	5.0	5.0	5.0	5.0	5.0									
TYPE	Seamless													LSAW with 100% Radiography			
MOC	API 5L Gr, X60 PSL-2													API 5L Gr, X60 PSL-2			
Ends	PE				BE												
Fittings Data																	
Size(in)	0.5	0.75	1	1.5	2	3	4	6	8	10	12	14	16	18	20	22	24
TYPE	Socket Weld				Butt Weld												
Rating	# 9000				XXS	XXS	XXS	XXS	XXS	XXS	160	160	160	160	160	160	160
MOC	ASTM A 694 F60				ASTM A 860 WPHY 60, Seamless U.N.O									ASTM A860 WPHY 60,Welded U.N.O			
Elbow	ASMEB16.11				ASME B 16.9									ASME B 16.9			
Tee	ASMEB16.11				ASME B 16.9									ASME B 16.9			
Red.	ASMEB16.11				ASME B 16.9									ASME B 16.9			
Cap	ASMEB16.11				ASME B 16.9									ASME B 16.9			
Coupl	ASMEB16.11				ASME B 16.9									ASME B 16.9			
Plug	ASMEB16.11				ASME B 16.9									ASME B 16.9			
Union																	
Elbowlet	MSS SP 97,ASTM A 694 F60				MSS SP 97,ASTM A 694 F60									MSS SP 97,ASTM A 694 F60			
Sockolet	MSS SP 97,ASTM A 694 F60				MSS SP 97,ASTM A 694 F60									MSS SP 97,ASTM A 694 F60			
Weldolet	MSS SP 97,ASTM A 694 F60				MSS SP 97,ASTM A 694 F60									MSS SP 97,ASTM A 694 F60			
Nipple	MSS SP 97,Same as pipe				MOC Same as pipe									MOC Same as pipe			
Swage	MSS SP 95,Same as pipe				MSS SP 95,MOC Same as pipe									MSS SP 95,MOC Same as pipe			
Flange																	
Size(in)	0.5	0.75	1	1.5	2	3	4	6	8	10	12	14	16	18	20	22	24
TYPE	SW				WN												
MOC	ASTM A 694 F60				ASTM A 694 F60												
FACE	RTJ-Note 7				RTJ, Note 7												
STD.	ASME B 16.5				ASME B 16.5, But welding ends as per ASME B 16.25												
Spectacle Blind/Spacer Blinds																	
Size(in)	0.5	0.75	1	1.5	2	3	4	6	8	10	12	14	16	18	20	22	24
MOC	ASTM A 694 F60																
Spectacle	ASME B 16.48				ASME B 16.48							Spacer and blind as per ASME B 16.48					
Mechanical Joints																	
Stud Bolt	ASTM A 193 Gr. B7M				ASTM A 193 Gr. B7M												
Hex Nuts	ASTM A 194 Gr. 2HM				ASTM A 194 Gr. 2HM												
Gasket	B 16.20,OCT ring of Soft Iron with Max. 90BHN				ASME B 16.20,OCT ring of Soft Iron with Max. Hardness of 90BHN												

Pressure-Temperature Rating				Maximum Hydrostatic Pressure	
Temp.,Deg F	Pressure, PSI	Temp,Deg C	Pressure, Kg/cm2	Pressure, psig	Pres.,Kg/cm2g
(-) 4 to 100	6171.5	(-) 20 to 38	433.9	9257.3 psig	650.85 Kg/cm2
122	6057.7	50	425.9	Limited by Flange considereing flange as the weakest joint in piping system	
212	5632.4	100	396		
302	5447.5	150	383		
392	5293.9	200	372.2		

Notes Releted to Pipe,Fittings,Flanges,Gasket and Stud Bolts -Nuts

1. Welded fittings shall be 100% radiographed.
2.All alloy steel stud bolts and nuts shall be hot dip galvanized or electrogalvanized with minimum coating as per spec.
3. Spectacle blinds and spacer sizes and rating that are not available in ASME B 16.48 shall be as per manufacturer standard. Design shall be submitted to company for review and approval.
4. All pipe thread shall be as per ASME B 1.20.1
5. PMS to be read in conjuction with FS 2004 A.
6. Two jackscrew, 180 degree apart shall be provided in one of the flanges for all orifice flange and WNRTJ flanges above 3" size and specified spectacle
7. Weld Joint Factor for welded pipe shall be as per ASME B 31.3
8. Gasket Contact Surface shall have maximum roughness of 63AARH
9. Minimum RTJ groove hardness shall be 120BHN
10. Octagonal (OCT) ring shall be Hot Dip Galvanized or electrogalvaized.
11. In cae calculated thickness is more than thickness of schedule of XXS for small bore piping (1/2"), reduce MT and use XXS only.

Offshore Design Section Engineering Services IS0-9001:2000	**PIPING MATERIAL SPECIFICATION**				Sheet No.	**2 of 2**	
	Piping Class		Material	C.A	Spec.No	Revision: 0	
	G1N	# 2500	CS-NACE	6mm	2004A,Rev 9	Page No.	34
	Design Code: ASME B 31.3 and other applicable Code NACE-MR-01-75/ISO-15156-1/2/3						
	Service	Corrosive HydroCarbon Service-Sour Liquid and Vapour.					
	0						

Branch Table as per API RP 14E

Run Pipe \ Branch Pipe	≤ 1	1-1.5	2	3	4	6	8	10	12	14	16	18	20	24	30
≤ 1	T														
1-1.5	T	T													
2	*	*	T												
3	*	*	T	T											
4	*	*	T	T	T										
6	*	*	W	T	T	T									
8	*	*	W	W	T	T	T								
10	*	*	W	W	W	T	T	T							
12	*	*	W	W	W	T	T	T	T						
14	*	*	W	W	W	W	T	T	T	T					
16	*	*	W	W	W	W	T	T	T	T	T				
18	*	*	W	W	W	W	W	T	T	T	T	T			
20	*	*	W	W	W	W	W	T	T	T	T	T	T		
24	*	*	W	W	W	W	W	W	T	T	T	T	T	T	
30	*	*	W	W	W	W	W	W	W	W	T	T	T	T	T

LEGEND	
*	Sockolet
W	Weldolet
T	TEE

Valve Data

Size(in)	0.5	0.75	1	1.5	2	3	4	6	8	10	12	14	16	18	20	22	24
Gate Valve																	
TAG	VG 67,SW				VG 273,FLANGED												
Rating	# 2500				# 1500,RF												
Plug Valve																	
TAG																	
Rating																	
Ball Valve																	
TAG	Use Gate Valve, VG 67				VB 273, Lever Operated							VB **, Gear Operated					
Rating	# 2500				# 1500, RTJ												
Globe Valve																	
TAG	VGL 67,SW				VGL 273												
Rating	# 2500				# 1500, RTJ												
Check Valve																	
TAG	VC 67,SW,Lift Check				VC 273,Swing Check												
Rating	# 2500				# 1500, RTJ												
Needle Valve																	
TAG	VN 20,SW																
Rating	# 2500																
Butter Fly Valve																	
TAG																	
Rating																	

Notes Releted to Valve and Brach Connection

1. PMS to be read in conjuction with FS 2004 A.
2. Maximum temperature limit for all Ball Valve shall be 121 Degree C

Revision: 0	15.01.16	Issued For Bid	PS	AKM	SJ
Revision	Date	Description	Prepared By	Reviewed By	Approved By

ONGC	Offshore Design Section Engineering Services IS0-9001:2000				**PIPING MATERIAL SPECIFICATION**									Sheet No.		**1 of 2**	
					Piping Class				Material			C.A	Spec.No			Revision: 0	
					XG1		API 5000		CS			3mm	2004A,Rev 9			Page No.	35
					Design Code:				**ASME B 31.3**								
					Service		Acidization										

Pipe Data	ASME B 36.10																
Size(in)	0.5	0.75	1	1.5	2	3	4	6	8	10	12	14	16	18	20	22	24
O.D.mm	21.3	26.7	33.4	48.3	60.3	88.9	114.3	168.3	219.1	273.1	323.9	355.6	406.4	457.2	508	558.8	609.6
Sch.	XXS	XXS	XXS	XXS	XXS	XXS											
WTmm	7.47	7.82	9.09	10.16	11.07	15.24											
M.T (%)	8.0	12.5	5.0	12.5	11.0	12.5											
TYPE	Seamless																
MOC	ASTM A 106 Gr. B																
Ends	Threaded				BE												

Fittings Data																	
Size(in)	0.5	0.75	1	1.5	2	3	4	6	8	10	12	14	16	18	20	22	24
TYPE	Threaded				Butt Weld												
Rating	# 9000				XXS	XXS											
MOC	ASTM A 105 U.N.O				A 234 Gr. WPB, Seamless												
Elbow	ASMEB16.11				ASME B 16.9												
Tee	ASMEB16.11				ASME B 16.9												
Red.	ASMEB16.11				ASME B 16.9												
Cap	ASMEB16.11				ASME B 16.9												
Coupl	ASMEB16.11				ASME B 16.9												
Plug	ASMEB16.11				ASME B 16.9												
Union	ASMEB16.11				BS 3799												
Elbowlet	MSS SP 97,ASTM A 105				MSS SP 97,ASTM A 105												
Sockolet	MSS SP 97,ASTM A 105				MSS SP 97,ASTM A 105												
Weldolet	MSS SP 97,ASTM A 105				MSS SP 97,ASTM A 105												
Nipple	MSS SP 97,Same as pipe				MOC Same as pipe												
Swage	MSS SP 95,Same as pipe				MSSSP95,Same as pipe												

Flange																	
Size(in)	0.5	0.75	1	1.5	2	3	4	6	8	10	12	14	16	18	20	22	24
TYPE	Threaded				WN,# 5000												
MOC	API 6A Type -2				API 6A Type-4												
FACE	RTJ-Note 7				RTJ, Note 7												
STD.	API 6A Type 6B				API 6A Type 6B												

Miscellenious	
Size(in) Union	Wing union each of forged steel male& female stubs.Forged steel nuts & replaceble resielent ring. Wing Union Shall be suitable to 5000 PSI CWP for sizes less than equal to 3"
Mechanical Joints	
Stud Bolt	ASTM A 193 Gr. B7
Hex Nuts	ASTM A 194 Gr. 2H
Gasket	API 6A Type RX ,OCT ring of Soft Iron with Max. 90BHN

Pressure-Temperature Rating				Maximum Hydrostatic Pressure	
Temp.,Deg F	Pressure, PSI	Temp,Deg C	Pressure, Kg/cm2	Pressure, psig	Pres.,Kg/cm2g
60 to 100	5000	16 to 38	351.6	10000 psig	703.3 Kg/cm2
				Limited by Flange considereing flange as the weakest joint in piping system	

Notes Releted to Pipe,Fittings,Flanges,Gasket and Stud Bolts -Nuts

1. Welded fittings shall be 100% radiographed.
2. All alloy steel stud bolts and nuts shall be hot dip galvanized or electrogalvanized with minimum coating as per spec.
3. Spectacle blinds and spacer sizes and rating that are not available in ASME B 16.48 shall be as per manufacturer standard. Design shall be submitted to company for review and approval.
4. Two jackscrew, 180 degree apart shall be provided in one of the flanges for all orifice flange and WNRTJ flanges above 3" size
5. All pipe thread shall be as per ASME B 1.20.1
6. PMS to be read in conjuction with FS 2004 A.
7. Gasket Contact Surface shall have maximum roughness of 63AARH
8. Minimum RTJ groove hardness shall be 120BHN
9. Octagonal (OCT) ring shall be Hot Dip Galvanized or electrogalvaized.
10. Acidization lines to be designed without any pockect
11. All threaded jonts shall be seal welded with full strength fillet weld.
12. Contractor to fulfill the requirement of category M- Fluid of ASME B 31.3
13. In cae calculated thickness is more than thickness of schedule of XXS for small bore piping (1/2"), reduce MT and use XXS only.

Offshore Design Section Engineering Services IS0-9001:2000	**PIPING MATERIAL SPECIFICATION**				Sheet No.	**2 of 2**	
	Piping Class		Material	C.A	Spec.No	Revision: 0	
	XG1	API 5000	CS	3mm	2004A,Rev 9	Page No.	36
	Design Code:		**ASME B 31.3**				
	Service				Acidization		
	0						

Branch Table as per API RP 14E

Run Pipe \ Branch Pipe	0.5	0.75	1	1.5	2	3	4	6	8	10	12	14	16	18	20	22	24
0.5	T																
0.75	T	T															
1	T	T	T														
1.5	T	T	T	T													
2	*	*	*	T	T												
3	*	*	*	*	T	T											

LEGEND	
*	Thredolet/Elbowlet
W	Weldolet
T	TEE

Valve Data

Size(in)	0.5	0.75	1	1.5	2	3	4	6	8	10	12	14	16	18	20	22	24
Gate Valve																	
TAG	VG 57,SCRD																
Rating	# API 5000																
Plug Valve																	
TAG																	
Rating																	
Ball Valve																	
TAG	Use Gate Valve, VG 57				VB 97, G.O.												
Rating	# API 5000				API 5000, RTJ												
Globe Valve																	
TAG																	
Rating																	
Check Valve																	
TAG					VC 97,Swing Check												
Rating					API 5000, RTJ												
Needle Valve																	
TAG																	
Rating																	
Butter Fly Valve																	
TAG																	
Rating																	

Notes Releted to Valve and Brach Connection

1. PMS to be read in conjuction with FS 2004 A.
2. Maximum temperature limit for all Ball Valve shall be 121 Degree C

Revision	Date	Description	Prepared By	Reviewed By	Approved By
Revision: 0	04-08-2008	Issued For Bid	PS	GJ	GRP

	Offshore Design Section Engineering Services IS0-9001:2000				**PIPING MATERIAL SPECIFICATION**									Sheet No.		**1 of 2**	
					Piping Class			Material			C.A		Spec.No			Revision: 0	
					XG1N		API 5000	CS-NACE			6mm		2004A,Rev 9			Page No.	37
					Design Code: ASME B 31.3 and other applicable Code NACE-MR-01-75/ISO-15156-1/2/3												
					Service	Corrosive HydroCarbon Service-Sour Liquid and Vapour and Acidization Service											
Pipe Data	ASME B 36.10																
Size(in)	0.5	0.75	1	1.5	2	3	4	6	8	10	12	14	16	18	20	22	24
O.D.mm	21.3	26.7	33.4	48.3	60.3	88.9	114.3	168.3	219.1	273.1	323.9	355.6	406.4	457.2	508	558.8	609.6
Sch.	XXS	XXS	XXS	XXS	XXS	XXS											
WTmm	7.47	7.82	9.09	7.14	11.07	15.24											
M.T (%)	8.0	12.5	5.0	12.5	11.0	12.5											
TYPE	Seamless																
MOC	ASTM A 106 Gr. B																
Ends	Threaded				BE												
Fittings Data																	
Size(in)	0.5	0.75	1	1.5	2	3	4	6	8	10	12	14	16	18	20	22	24
TYPE	Threaded				Butt Weld												
Rating	# 9000				XXS	XXS											
MOC	ASTM A 105 U.N.O				A 234 Gr. WPB, Seamless												
Elbow	ASMEB16.11				ASME B 16.9												
Tee	ASMEB16.11				ASME B 16.9												
Red.	ASMEB16.11				ASME B 16.9												
Cap	ASMEB16.11				ASME B 16.9												
Coupl	ASMEB16.11				ASME B 16.9												
Plug	ASMEB16.11				ASME B 16.9												
Union	ASMEB16.11				BS 3799												
Elbowlet	MSS SP 97,ASTM A 105				MSS SP 97,ASTM A 105												
Sockolet	MSS SP 97,ASTM A 105				MSS SP 97,ASTM A 105												
Weldolet	MSS SP 97,ASTM A 105				MSS SP 97,ASTM A 105												
Nipple	MSS SP 97,Same as pipe				MOC Same as pipe												
Swage	MSS SP 95,Same as pipe				MSSSP95,MOC Same as pipe												
Flange																	
Size(in)	0.5	0.75	1	1.5	2	3	4	6	8	10	12	14	16	18	20	22	24
TYPE	Threaded				WN,# 5000												
MOC	API 6A Type -2				API 6A Type-4												
FACE	RTJ-Note 7				RTJ, Note 7												
STD.	API 6A Type 6B				API 6A Type 6B												
Miscellenious																	
Size(in)	Wing union each of forged steel male& female stubs.Forged steel nuts & replaceble resielent ring. Wing Union Shall be suitable to 5000 PSI CWP																
Union	for sizes less than equal to 3"																
Mechanical Joints																	
Stud Bolts	ASTM A 193 Gr. B7M																
Hex Nuts	ASTM A 194 Gr. 2HM																
Gasket	API 6A Type RX ,OCT ring of Soft Iron with Max. 90BHN																

Pressure-Temperature Rating				Maximum Hydrostatic Pressure	
Temp.,Deg F	Pressure, PSI	Temp,Deg C	Pressure, Kg/cm2	Pressure, psig	Pres.,Kg/cm2g
60 to 100	5000	16 to 38	351.6	10000 psig	703.3 Kg/cm2
				Limited by Flange considereing flange as the weakest joint in piping system	

Notes Releted to Pipe,Fittings,Flanges,Gasket and Stud Bolts -Nuts

1. Welded fittings shall be 100% radiographed.
2.All alloy steel stud bolts and nuts shall be hot dip galvanized or electrogalvanized with minimum coating as per spec.
3. Spectacle blinds and spacer sizes and rating that are not available in ASME B 16.48 shall be as per manufacturer standard. Design shall be submitted to company for review and approval.
4. Two jackscrew, 180 degree apart shall be provided in one of the flanges for all orifice flange and WN flanges above 3" size
5. All pipe thread shall be as per ASME B 1.20.1
6. PMS to be read in conjuction with FS 2004 A.
7. Gasket Contact Surface shall have maximum roughness of 63AARH
8. Minimum RTJ groove hardness shall be 120BHN
9. Octagonal (OCT) ring shall be Hot Dip Galvanized or electrogalvaized.
10. Acidization lines to be designed without any pockect
11. All threaded jonts shall be seal welded with full strength fillet weld.
12. Contractor to fulfill the requirement of category M- Fluid of ASME B 31.3
13. In cae calculated thickness is more than thickness of schedule of XXS for small bore piping (1/2"), reduce MT and use XXS only.

Offshore Design Section Engineering Services IS0-9001:2000	PIPING MATERIAL SPECIFICATION				Sheet No.	2 of 2
	Piping Class	Material	C.A	Spec.No	Revision: 0	
	XG1N	API 5000	CS-NACE	6mm	2004A,Rev 9	Page No. 38
	Design Code: ASME B 31.3 and other applicable Code NACE-MR-01-75/ISO-15156-1/2/3					
	Service:	Corrosive HydroCarbon Service-Sour Liquid and Vapour and Acidization Service				
	0					

Branch Table as per API RP 14E

Run Pipe \ Branch Pipe	0.5	0.75	1	1.5	2	3	4	6	8	10	12	14	16	18	20	22	24
0.5	T																
0.75	T	T															
1	T	T	T														
1.5	T	T	T	T													
2	*	*	*	T	T												
3	*	*	*	*	T	T											

LEGEND	
*	Thredolet/Elbowlet
W	Weldolet
T	TEE

Valve Data

Size(in)	0.5	0.75	1	1.5	2	3	4	6	8	10	12	14	16	18	20	22	24
Gate Valve																	
TAG	VG 58,SCRD																
Rating	# API 5000																
Plug Valve																	
TAG																	
Rating																	
Ball Valve																	
TAG	Use Gate Valve, VG 58				VB 98,G.O.												
Rating	# API 5000				API 5000, RTJ												
Globe Valve																	
TAG																	
Rating																	
Check Valve																	
TAG					VC 98,Swing Check												
Rating					API 5000, RTJ												
Needle Valve																	
TAG																	
Rating																	
Butter Fly Valve																	
TAG																	
Rating																	

Notes Releted to Valve and Brach Connection

1. PMS to be read in conjuction with FS 2004 A.
2. Maximum temperature limit for all Ball Valve shall be 121 Degree C

Revision: 0	04-08-2008	Issued For Bid	PS	GJ	GRP
Revision	Date	Description	Prepared By	Reviewed By	Approved By

	Offshore Design Section Engineering Services IS0-9001:2000				**PIPING MATERIAL SPECIFICATION**									Sheet No.		**1 of 2**	
					Piping Class				Material			C.A(Nil for SS)		Spec.No		Revision: 3	
					A3		# 150		SS/CS-Galvanized-Note-8			1.5 mm		2004A,Rev 9		Page No.	39
					Design Code:					**ASME B 31.3**							
					Service					Instrument Air							
Pipe Data	ASME B 36.10																
Size(in)	0.5	0.75	1	1.5	2	3	4	6	8	10	12	14	16	18	20	22	24
O.D.mm	21.3	26.7	33.4	48.3	60.3	88.9	114.3	168.3	219.1	273.1	323.9	355.6	406.4	457.2	508	558.8	609.6
Sch.	80s	80s	80s	80s	80s	80	80	80	Std	Std	Std	Std	Std				
WTmm	3.73	3.91	4.55	5.08	5.54	7.62	8.56	10.97	8.18	9.27	9.53	9.53	9.53				
M.T (%)	12.5	12.5	12.5	12.5	12.5	12.5	12.5	12.5	12.5	12.5	12.5	12.5	12.5				
TYPE	Seamless																
MOC	ASTM A 312 TP 316					ASTM A 106 Gr. B											
Ends	Screwed (SCRD)					BE											
Fittings Data																	
Size(in)	0.5	0.75	1	1.5	2	3	4	6	8	10	12	14	16	18	20	22	24
TYPE	Screwed (SCRD)					Butt Weld											
Rating	#3000				80s	80	80	80	Std	Std	Std	Std	Std				
MOC	ASTM A 182 F 316 U.N.O					ASTM A 234 Gr. WPB, Seamless U.N.O											
Elbow	ASMEB16.11					ASME B 16.9											
Tee	ASMEB16.11					ASME B 16.9											
Red.	ASMEB16.11					ASME B 16.9											
Cap	ASMEB16.11					ASME B 16.9											
Coupl	ASMEB16.11					ASME B 16.9											
Plug	ASMEB16.11					ASME B 16.9											
Union	ASMEB16.11					BS 3799											
Elbowlet	MSS SP 97					MSS SP 97,ASTM A 105,Galvanized											
Sockolet	MSS SP 97					MSS SP 97,ASTM A 105,Galvanized											
Weldolet	MSS SP 97					MSS SP 97,ASTM A 105,Galvanized											
Nipple	MSS SP 97,Same as pipe					MOC Same as pipe											
Swage	MSS SP 95,Same as pipe					MSS SP 95, MOC Same as pipe											
Flange																	
Size(in)	0.5	0.75	1	1.5	2	3	4	6	8	10	12	14	16	18	20	22	24
TYPE	Screwed (SCRD)					WN											
MOC	ASTM A 182 F 316					ASTM A 105											
FACE	RF-Serrated Finished					RF-Serrated Finished											
STD.	ASME B 16.5					ASME B 16.5, But welding ends as per ASME B 16.25											
Spectacle Blind/Spacer Blinds																	
Size(in)	0.5	0.75	1	1.5	2	3	4	6	8	10	12	14	16	18	20	22	24
MOC	ASTM A 182 F 316					ASTM A 105-Galvanized U.N.O											
Spectacle	ASME B 16.48											Spacer and blind as per ASME B 16.48					
Mechanical Joints																	
Stud Bolts	ASTM A 193 Gr. B7																
Hex Nuts	ASTM A 194 Gr. 2H																
Gasket	ASME B 16.21,Flat Ring,1.58mm,CNAF																

Pressure-Temperature Rating is considered same as material group 2.2 of ASME B 16.5				Maximum Hydrostatic Pressure	
Temp.,Deg F	Pressure, PSI	Temp,Deg C	Pressure, Kg/cm2	Pressure, psig	Pres.,Kg/cm2g
60/100	275	16/38	19.33	425 psig	29.9 Kg/cm2
200	235	93	16.52	Limited by Flange considereing flange as the weakest joint in piping system	
300	215	149	15.11		
400	195	204	13.7		

Notes Releted to Pipe,Fittings,Flanges,Gasket and Stud Bolts -Nuts

1. Welded fittings shall be 100% radiographed.
2. All alloy steel stud bolts and nuts shall be hot dip galvanized or electrogalvanized with minimum coating as per spec.
3. Spectacle blinds and spacer sizes and rating that are not available in ASME B 16.48 shall be as per manufacturer standard. Design shall be submitted to company for review and approval.
4. All pipe thread shall be as per ASME B 1.20.1
5. PMS to be read in conjuction with FS 2004 A.
6. Flanged galvanized spool to be used to minimized welding at site.
7. Two jackscrew, 180 degree apart shall be provided in one of the flanges for all orifice flange and specified spectacle blind assemblies.
8. All pipe fittings other that SS piping shall be hot dip galvanized with a minimum of 763 gram of galvanizing material per square meter of surface area in accordance with ASTM A 123/ASTM A 153.Pipe spool requireing welding shall be galvanized after welding. Spool shall be of such shape and dimenssion to suite the size and shape that the galvanizing shop can accomodate. Contractor to ensure of the spools such that the can be thouroughly cleaned from inside out before galvanizing.
9. Exposed thread and piping assemblies etc . Shall be coated with zinc primer or epoxy coating after installation.
10. Connection between SS and GALVANIZED piping shall be flanged.

Offshore Design Section Engineering Services IS0-9001:2000	**PIPING MATERIAL SPECIFICATION**				Sheet No.	**2 of 2**	
	Piping Class		Material	C.A(Nil for SS)	Spec.No	Revision: 3	
	A3	# 150	SS/CS-Galvanized-Note-8	1.5 mm	2004A,Rev 9	Page No.	40
	Design Code:		**ASME B 31.3**				
	Service	Instrument Air					
	0						

Branch Table as per API RP 14E

Run Pipe	≤ 1	1-1.5	2	3	4	6	8	10	12	14	16	18	20	24	30
≤ 1	T														
1-1.5	T	T													
2	*	*	T												
3	*	*	T	T											
4	*	*	T	T	T										
6	*	*	W	T	T	T									
8	*	*	W	W	T	T	T								
10	*	*	W	W	W	T	T	T							
12	*	*	W	W	W	T	T	T	T						
14	*	*	W	W	W	W	T	T	T	T					
16	*	*	W	W	W	W	T	T	T	T	T				
18	*	*	W	W	W	W	W	T	T	T	T	T			
20	*	*	W	W	W	W	W	T	T	T	T	T	T		
24	*	*	W	W	W	W	W	W	T	T	T	T	T	T	
30	*	*	W	W	W	W	W	W	W	W	T	T	T	T	T
Branch Pipe	≤ 1	1-1.5	2	3	4	6	8	10	12	14	16	18	20	24	30

LEGEND	
*	Threadolet/Elbowlet
W	Weldolet
T	TEE

Valve Data

Size(in)	0.5	0.75	1	1.5	2	3	4	6	8	10	12	14	16	18	20	22	24
Gate Valve																	
TAG	VG 51-A,SCRD				VG81	VG 60,FLANGED											
Rating	# 800				# 150,RF												
Plug Valve																	
TAG																	
Rating																	
Ball Valve																	
TAG	VB 51-A,SCRD				VB91	VB 60, Lev. Op											
Rating	# 800				# 150, RF												
Globe Valve																	
TAG	VGL 51-A,SCRD				VGL81	VGL 60											
Rating	# 800				# 150, RF												
Check Valve																	
TAG	VC 51-A,SCRD,Lift Check				VC91	VC 60,Swing Check/ VC 81 (Wafer Check, Note -1)											
Rating	# 800				# 150, RF												
Needle Valve																	
TAG																	
Rating																	
Butter Fly Valve																	
TAG																	
Rating																	

Notes Releted to Valve and Brach Connection

1. Wafer check valve to be avoided as far as possible; unless the avaliable space constraint does not allow normal check valve . The contractor to take approvel for use of wafer check Valve during pipe routing after extablishing the space constraint.
2. PMS to be read in conjuction with FS 2004 A.
3. For instrument main header use CS valves but for instrument sub header and braches use SS 316 Valves.
4. Valve for sizes 1/2" to 1.5" shall be screwed and valve material shall be SS316 same as A9 piping class.
5. Valve for size 2" shall be flanged and valve material shall be SS316 same as A9 Piping Class.
6. Valve for size 3" and above shall be flanged and valve material shall be CS same as A1 Piping Class.

Revision	Date	Description	Prepared By	Reviewed By	Approved By
Revision: 3	15.01.16	Issued For Bid	PS	AKM	SJ

Offshore Design Section Engineering Services IS0-9001:2000	PIPING MATERIAL SPECIFICATION																Sheet No. 1 of 2
	Piping Class								Material			C.A(Nil for SS)		Spec.No		Revision: 3	
	B3				# 300				SS/CS-Galvanized-Note-8			1.5 mm	2004A,Rev 9			Page No	41
	Design Code:								**ASME B 31.3**								
	Service:				Instrument Air												

Pipe Data	ASME B 36.10																
Size(in)	0.5	0.75	1	1.5	2	3	4	6	8	10	12	14	16	18	20	22	24
O.D.mm	21.3	26.7	33.4	48.3	60.3	88.9	114.3	168.3	219.1	273.1	323.9	355.6	406.4	457.2	508	558.8	609.6
Sch.	80s	80s	80s	80s	80s	80	80	80	Std	Std	40	40	XS				
WTmm	3.73	3.91	4.55	5.08	5.54	7.62	8.56	10.97	8.18	9.27	10.31	11.13	12.7				
M.T (%)	12.5	12.5	12.5	12.5	12.5	12.5	12.5	12.5	12.5	12.5	12.5	12.5	12.5				
TYPE	Seamless																
MOC	ASTM A 312 TP 316					ASTM A 106 Gr. B											
Ends	Screwed (SCRD)					BE											
Fittings Data																	
Size(in)	0.5	0.75	1	1.5	2	3	4	6	8	10	12	14	16	18	20	22	24
TYPE	Screwed (SCRD)				80s	Butt Weld											
Rating	# 3000					80	80	80	Std	Std	40	40	XS				
MOC	ASTM A 182 F 316 U.N.O					ASTM A 234 Gr. WPB, Seamless U.N.O											
Elbow	ASMEB16.11					ASME B 16.9											
Tee	ASMEB16.11					ASME B 16.9											
Red.	ASMEB16.11					ASME B 16.9											
Cap	ASMEB16.11					ASME B 16.9											
Coupl	ASMEB16.11					ASME B 16.9											
Plug	ASMEB16.11					ASME B 16.9											
Union	ASMEB16.11					BS 3799											
Elbowlet	MSS SP 97					MSS SP 97,ASTM A 105,Galvanized											
Sockolet	MSS SP 97					MSS SP 97,ASTM A 105,Galvanized											
Weldolet	MSS SP 97					MSS SP 97,ASTM A 105,Galvanized											
Nipple	MSS SP 97,Same as pipe					MOC Same as pipe											
Swage	MSS SP 95,Same as pipe					MSS SP 95, MOC Same as pipe											
Flange																	
Size(in)	0.5	0.75	1	1.5	2	3	4	6	8	10	12	14	16	18	20	22	24
TYPE	Screwed (SCRD)					WN											
MOC	ASTM A 182 F 316					ASTM A 105											
FACE	RF-Smooth Finished					RF-Smooth Finished											
STD.	ASME B 16.5					ASME B 16.5, But welding ends as per ASME B 16.25											
Spectacle Blind/Spacer Blinds																	
Size(in)	0.5	0.75	1	1.5	2	3	4	6	8	10	12	14	16	18	20	22	24
MOC	ASTM A 182 F 316					ASTM A 105-Galvanized U.N.O											
Spectacle	ASME B 16.48											Spacer and blind as per ASME B 16.48					
Mechanical Joints																	
Stud Bolts	ASTM A 193 Gr. B7																
Hex Nuts	ASTM A 194 Gr. 2H																
Gasket	ASME B 16.21,Flat Ring,1.58mm,CNAF																

Pressure-Temperature Rating is considered same as material group 2.2 of ASME B 16.5

Temp.,Deg F	Pressure, PSI	Temp,Deg C	Pressure, Kg/cm2
60/100	720	16/38	50.6
200	620	93	43.6
400	515	204	36.2
600	450	316	31.6

Maximum Hydrostatic Pressure	
Pressure, psig	Pres.,Kg/cm2g
1100 psig	77 Kg/cm2
Limited by Flange considereing flange as the weakest joint in piping system	

Notes Releted to Pipe,Fittings,Flanges,Gasket and Stud Bolts -Nuts

1. Welded fittings shall be 100% radiographed.
2.All alloy steel stud bolts and nuts shall be hot dip galvanized or electrogalvanized with minimum coating as per spec.
3. Spectacle blinds and spacer sizes and rating that are not available in ASME B 16.48 shall be as per manufacturer standard. Design shall be submitted to company for review and approval.
4. All pipe thread shall be as per ASME B 1.20.1
5. PMS to be read in conjuction with FS 2004 A.
6. Flanged galvanized spool to be used to minimized welding at site.
7. Two jackscrew, 180 degree apart shall be provided in one of the flanges for all orifice flange and specified spectacle blind assemblies.
8. All pipe fittings other that SS piping shall be hot dip galvanized with a minimum of 763 gram of galvanizing material per square meter of surface area in accordance with ASTM A 123/ASTM A 153.Pipe spool requireing welding shall be galvanized after welding. Spool shall be of such shape and dimenssion to suite the size and shape that the galvanizing shop can accomodate. Contractor to ensure of the spools such that the can be thouroughly cleaned from inside out before galvanizing.
9. Exposed thread and piping assemblies etc . Shall be coated with zinc primer or epoxy coating after installation.

Offshore Design Section Engineering Services IS0-9001:2000	**PIPING MATERIAL SPECIFICATION**				Sheet No.	**2 of 2**	
	Piping Class	Material	C.A(Nil for SS)		Spec.No	Revision: 3	
	B3	# 300	SS/CS-Galvanized-Note-8	1.5 mm	2004A,Rev 9	Page No	42
	Design Code:	**ASME B 31.3**					
	Service:	Instrument Air					
	0						

Branch Table as per API RP 14E

Run Pipe	≤ 1	1-1.5	2	3	4	6	8	10	12	14	16	18	20	24	30
≤ 1	T														
1-1.5	T	T													
2	*	*	T												
3	*	*	T	T											
4	*	*	T	T	T										
6	*	*	W	T	T	T									
8	*	*	W	W	T	T	T								
10	*	*	W	W	W	T	T	T							
12	*	*	W	W	W	T	T	T	T						
14	*	*	W	W	W	W	T	T	T	T					
16	*	*	W	W	W	W	T	T	T	T	T				
18	*	*	W	W	W	W	W	T	T	T	T	T			
20	*	*	W	W	W	W	W	T	T	T	T	T	T		
24	*	*	W	W	W	W	W	W	T	T	T	T	T	T	
30	*	*	W	W	W	W	W	W	W	W	T	T	T	T	T
Branch Pipe															

LEGEND	
*	Threadolet/Elbowlet
W	Weldolet
T	TEE

Valve Data

Size(in)	0.5	0.75	1	1.5	2	3	4	6	8	10	12	14	16	18	20	22	24
Gate Valve																	
TAG	VG 51-A,SCRD				VG-82	VG 62,FLANGED											
Rating	# 800				# 300,RF												
Plug Valve																	
TAG																	
Rating																	
Ball Valve																	
TAG	VB 51-A,SCRD				VB-92	VB 64, Lever Operated											
Rating	# 800				# 300, RF												
Globe Valve																	
TAG	VGL 51-A,SCRD				VGL - 82	VGL 62											
Rating	# 800				# 300, RF												
Check Valve																	
TAG	VC 51-A,SCRD,Lift Check				VC - 92	VC-62,Swing Check/VC 86 (Wafer Check,Note-1)											
Rating	# 800				# 300, RF												
Needle Valve																	
TAG																	
Rating																	
Butter Fly Valve																	
TAG																	
Rating																	

Notes Releted to Valve and Brach Connection

1. Wafer check valve to be avoided as far as possible; unless the avaliable space constraint does not allow normal check valve . The contractor to take approvel for use of wafer check Valve during pipe routing after extablishing the space constraint.
2. PMS to be read in conjuction with FS 2004 A.
3. For instrument main header use CS valves but for instrument sub header and braches use SS 316 Valves.
4. Valve for sizes 1/2" to 1.5" shall be screwed and valve material shall be SS316 same as B9 piping class.
5. Valve for size 2" shall be flanged and valve material shall be SS316 same as B9 Piping Class.
6. Valve for size 3" and above shall be flanged and valve material shall be CS same as B1 Piping Class.

Revision	Date	Description	Prepared By	Reviewed By	Approved By
Revision: 3	15.01.16	Issued For Bid	PS	AKM	SJ

	Offshore Design Section Engineering Services IS0-9001:2000					**PIPING MATERIAL SPECIFICATION**								Sheet No.		**1 of 2**	
						Piping Class			Material			C.A(Nil for SS)		Spec.No		Revision: 0	
						D3		# 600	SS/CS-Galvanized-Note-8			1.5 mm		2004A,Rev 9		Page No	43
						Design Code:			**ASME B 31.3**								
						Service:		Instrument Air									

Pipe Data	ASME B 36.10																
Size(in)	0.5	0.75	1	1.5	2	3	4	6	8	10	12	14	16	18	20	22	24
O.D.mm	21.3	26.7	33.4	48.3	60.3	88.9	114.3	168	219.1	273.1	323.9	355.6	406.4	457	508	558.8	609.6
Sch.	80s	80s	80s	80s	80s	80	80	80	80	80	80	80	80				
WTmm	3.73	3.9	4.6	5.08	5.54	7.62	8.56	10.97	12.7	15.08	17.47	19.05	21.4				
M.T (%)	12.5	12.5	12.5	12.5	12.5	12.5	12.5	12.5	12.5	12.5	12.5	12.5	12.5				
TYPE	Seamless																
MOC	ASTM A 312 TP 316					ASTM A 106 Gr. B											
Ends	Screwed (SCRD)					BE											
Fittings Data																	
Size(in)	0.5	0.75	1	1.5	2	3	4	6	8	10	12	14	16	18	20	22	24
TYPE	Screwed (SCRD)					Butt Weld											
Rating	# 3000					80	80	80	80	80	80	80	80				
MOC	ASTM A 182 F 316 U.N.O					ASTM A 234 Gr. WPB, Seamless U.N.O											
Elbow	ASMEB16.11					ASME B 16.9											
Tee	ASMEB16.11					ASME B 16.9											
Red.	ASMEB16.11					ASME B 16.9											
Cap	ASMEB16.11					ASME B 16.9											
Coupl	ASMEB16.11					ASME B 16.9											
Plug	ASMEB16.11					ASME B 16.9											
Union	ASMEB16.11					BS 3799											
Elbowlet	MSS SP 97					MSS SP 97,ASTM A 105,Galvanized											
Sockolet	MSS SP 97					MSS SP 97,ASTM A 105,Galvanized											
Weldolet	MSS SP 97					MSS SP 97,ASTM A 105,Galvanized											
Nipple	MSS SP 97,Same as pipe					MOC Same as pipe											
Swage	MSS SP 95,Same as pipe					MSS SP 95, MOC Same as pipe											
Flange																	
Size(in)	0.5	0.75	1	1.5	2	3	4	6	8	10	12	14	16	18	20	22	24
TYPE	Screwed (SCRD)					WN											
MOC	ASTM A 182 F 316					ASTM A 105											
FACE	RF-Smooth Finished					RF-Smooth Finished											
STD.	ASME B 16.5					ASME B 16.5, But welding ends as per ASME B 16.25											
Spectacle Blind/Spacer Blinds																	
Size(in)	0.5	0.75	1	1.5	2	3	4	6	8	10	12	14	16	18	20	22	24
MOC	ASTM A 182 F 316					ASTM A 105-Galvanized U.N.O											
Spectacle	ASME B 16.48											Spacer and blind as per ASME B 16.48					
Mechanical Joints																	
Stud Bolt	ASTM A 193 Gr. B7																
Hex Nuts	ASTM A 194 Gr. 2H																
Gasket	ASME B 16.20 , 4.5mm thick SS Spiral wound gasket with CNAF filler																

Pressure-Temperature Rating is considered same as material group 2.2 of ASME B 16.5				Maximum Hydrostatic Pressure	
Temp.,Deg F	Pressure, PSI	Temp,Deg C	Pressure, Kg/cm2	Pressure, psig	Pres.,Kg/cm2g
60/100	1440	16/38	101.2	2160 psig	151.9 Kg/cm2
200	1240	93	87.2	Limited by Flange considereing flange as the weakest joint in piping system	

Notes Releted to Pipe,Fittings,Flanges,Gasket and Stud Bolts -Nuts

1. Welded fittings shall be 100% radiographed.

2.All alloy steel stud bolts and nuts shall be hot dip galvanized or electrogalvanized with minimum coating as per spec.

3. Spectacle blinds and spacer sizes and rating that are not available in ASME B 16.48 shall be as per manufacturer standard. Design shall be submitted to company for review and approval.

4. All pipe thread shall be as per ASME B 1.20.1

5. PMS to be read in conjuction with FS 2004 A.

6. Flanged galvanized spool to be used to minimized welding at site.

7. Two jackscrew, 180 degree apart shall be provided in one of the flanges for all orifice flange and specified spectacle blind assemblies.

8. All pipe fittings other that SS piping shall be hot dip galvanized with a minimum of 763 gram of galvanizing material per square meter of surface area in accordance with ASTM A 123/ASTM A 153.Pipe spool requireing welding shall be galvanized after welding. Spool shall be of such shape and dimenssion to suite the size and shape that the galvanizing shop can accomodate. Contractor to ensure of the spools such that the can be thouroughly cleaned from inside out before galvanizing.

9. Exposed thread and piping assemblies etc . Shall be coated with zinc primer or epoxy coating after installation.

Offshore Design Section Engineering Services IS0-9001:2000	**PIPING MATERIAL SPECIFICATION**				Sheet No.	**2 of 2**	
	Piping Class		Material	C.A(Nil for SS)	Spec.No	Revision: 0	
	D3	# 600	SS/CS-Galvanized-Note-8	1.5 mm	2004A,Rev 9	Page No	44
	Design Code:		**ASME B 31.3**				
	Service:	Instrument Air					
	0						

Branch Table as per API RP 14E

Run Pipe \ Branch Pipe	≤ 1	1-1.5	2	3	4	6	8	10	12	14	16	18	20	24	30
≤ 1	T														
1-1.5	T	T													
2	*	*	T												
3	*	*	T	T											
4	*	*	T	T	T										
6	*	*	W	T	T	T									
8	*	*	W	W	T	T	T								
10	*	*	W	W	W	T	T	T							
12	*	*	W	W	W	T	T	T	T						
14	*	*	W	W	W	W	T	T	T	T					
16	*	*	W	W	W	W	T	T	T	T	T				
18	*	*	W	W	W	W	W	T	T	T	T	T			
20	*	*	W	W	W	W	W	T	T	T	T	T	T		
24	*	*	W	W	W	W	W	W	T	T	T	T	T	T	
30	*	*	W	W	W	W	W	W	W	W	T	T	T	T	T

LEGEND	
*	Threadolet/Elbowlet
W	Weldolet
T	TEE

Valve Data

Size(in)	0.5	0.75	1	1.5	2	3	4	6	8	10	12	14	16	18	20	22	24
Gate Valve																	
TAG	VG 51-A,SCRD				VG-92	VG 72,FLANGED											
Rating	# 800				# 600,RF												
Plug Valve																	
TAG																	
Rating																	
Ball Valve																	
TAG	VB 51-A,SCRD				VB-292	VB 264, Lever Operated											
Rating	# 800				# 600, RF												
Globe Valve																	
TAG	VGL 51-A,SCRD				VGL - 9	VGL 67											
Rating	# 800				# 600, RF												
Check Valve																	
TAG	VC 51-A,SCRD,Lift Check				VC - 29	VC-72,Swing Check/VC 96 (Wafer Check,Note-1)											
Rating	# 800				# 600, RF												
Needle Valve																	
TAG																	
Rating																	
Butter Fly Valve																	
TAG																	
Rating																	

Notes Releted to Valve and Brach Connection

1. Wafer check valve to be avoided as far as possible; unless the avaliable space constraint does not allow normal check valve . The contractor to take approvel for use of wafer check Valve during pipe routing after extablishing the space constraint.
2. PMS to be read in conjuction with FS 2004 A.
3. For instrument main header use CS valves but for instrument sub header and braches use SS 316 Valves.
4. Valve for sizes 1/2" to 1.5" shall be screwed and valve material shall be SS316 same as D9 piping class.
5. Valve for size 2" shall be flanged and valve material shall be SS316 same as D9 Piping Class.
6. Valve for size 3" and above shall be flanged and valve material shall be CS same as D1 Piping Class.

Revision	Date	Description	Prepared By	Reviewed By	Approved By
Revision: 0	15.01.16	Issued For Bid	PS	AKM	SJ

ONGC	Offshore Design Section Engineering Services IS0-9001:2000	**PIPING MATERIAL SPECIFICATION**		Sheet No.	**1 of 2**
		Piping Class	Material	C.A	Spec.No	Revision: 1
		A4 / # 150	CS-Galvanized-Note-8	1.5mm	2004A,Rev 9	Page No. 45
		Design Code:	***ASME B 31.3***			
		Service:	Potable Water (For non-drinking use)			

Pipe Data	ASME B 36.10																
Size(in)	0.5	0.75	1	1.5	2	3	4	6	8	10	12	14	16	18	20	22	24
O.D.mm	21.3	26.7	33.4	48.3	60.3	88.9	114.3	168.3	219.1	273.1	323.9	355.6	406.4	457.2	508	558.8	609.6
Sch.	80	80	80	80	80	80	80										
WTmm	3.73	3.91	4.55	5.08	5.54	7.62	8.56										
M.T (%)	12.5	12.5	12.5	12.5	12.5	12.5	12.5										
TYPE	Seamless																
MOC	ASTM A 106 Gr. B-Galvanized					ASTM A106Gr.B											
Ends	Screwed (SCRD)					BE											
Fittings Data																	
Size(in)	0.5	0.75	1	1.5	2	3	4	6	8	10	12	14	16	18	20	22	24
TYPE	Screwed (SCRD)					Butt Weld											
Rating	# 3000					80	80										
MOC	ASTM A 105-Galvanized U.N.O					ASTM A 234 Gr. WPB, Seamless U.N.O											
Elbow	ASMEB16.11					ASME B 16.9											
Tee	ASMEB16.11					ASME B 16.9											
Red.	ASMEB16.11					ASME B 16.9											
Cap	ASMEB16.11					ASME B 16.9											
Coupl	ASMEB16.11					ASME B 16.9											
Plug	ASMEB16.11					ASME B 16.9											
Union	ASMEB16.11					BS 3799											
Elbowlet	MSS SP 97,ASTM A 105,Galvanized					MSS SP 97,ASTM A 105,Galvanized											
Sockolet	MSS SP 97,ASTM A 105,Galvanized					MSS SP 97,ASTM A 105,Galvanized											
Weldolet	MSS SP 97,ASTM A 105,Galvanized					MSS SP 97,ASTM A 105,Galvanized											
Nipple	MSS SP 97,Same as pipe,Galvanized					MOC Same as pipe											
Swage	MSS SP 95,Same as pipe,Galvanized					MSS SP 95,MOC Same as pipe											
Flange																	
Size(in)	0.5	0.75	1	1.5	2	3	4	6	8	10	12	14	16	18	20	22	24
TYPE	Screwed (SCRD)					WN											
MOC	ASTM A 105-Galvanized U.N.O					ASTM A 105											
FACE	FF-Serrated Finished					FF-Serrated Finished-When connecte to Valves use FF flange											
STD.	ASME B 16.5					ASME B 16.5, But welding ends as per ASME B 16.25											
Spectacle Blind/Spacer Blinds																	
Size(in)	0.5	0.75	1	1.5	2	3	4	6	8	10	12	14	16	18	20	22	24
MOC	ASTM A 105-Galvanized U.N.O																
Spectacle	ASME B 16.48											Spacer and blind as per ASME B 16.48					
Mechanical Joints																	
Stud Bolts	ASTM A 307 Gr. B																
Hex Nuts	ASTM A 307 Gr. B																
Gasket	3.175mm Ribber with Maximum 60 Shore Durometer Flat ring as per ASME B 16.21. Use full face gaskets for Valves																

Pressure-Temperature Rating				Maximum Hydrostatic Pressure	
Temp.,Deg F	Pressure, PSI	Temp,Deg C	Pressure, Kg/cm2	Pressure, psig	Pres.,Kg/cm2g
(-) 4 to 100	230	(-) 20 to 38	16.3	350 psig	24.5 Kg/cm2
				Limited by Flange considereing flange as the weakest joint in piping system	

Notes Releted to Pipe,Fittings,Flanges,Gasket and Stud Bolts -Nuts

1. Welded fittings shall be 100% radiographed.
2. All alloy steel stud bolts and nuts shall be hot dip galvanized or electrogalvanized with minimum coating as per spec.
3. Spectacle blinds and spacer sizes and rating that are not available in ASME B 16.48 shall be as per manufacturer standard. Design shall be submitted to company for review and approval.
4. All pipe thread shall be as per ASME B 1.20.1
5. PMS to be read in conjuction with FS 2004 A.
6. Flanged galvanized spool to be used to minimized welding at site.
7. Two jackscrew, 180 degree apart shall be provided in one of the flanges for all orifice flange
8. All pipe fittings galvanized shall be hot dip galvanized with a minimum of 763 gram of galvanizing material per square meter of surface area in accordance with ASTM A 123/ASTM A 153.Pipe spool requireing welding shall be welded after welding. Spool shall be of such shape and dimenssion to suite the size and shape that the galvanizing shop can accomodate. Contractor to ensure of the spools such that the can be thouroughly cleaned from inside out before galvanizing.
9. Exposed thread and piping assemblies etc . Shall be coated with zinc primer or epoxy coating after installation.

Offshore Design Section Engineering Services IS0-9001:2000	**PIPING MATERIAL SPECIFICATION**				Sheet No.	**2 of 2**	
	Piping Class		Material	C.A	Spec.No	Revision: 1	
	A4	# 150	CS-Galvanized-Note-8	1.5mm	2004A,Rev 9	Page No.	46
	Design Code:		**ASME B 31.3**				
	Service:	Potable Water (For non-drinking use)					
	0						

Branch Table as per API RP 14E

LEGEND	
*	Threadolet/Elbowlet
W	Weldolet
T	TEE

Run Pipe	≤ 1	1-1.5	2	3	4	6	8	10	12	14	16	18	20	24	30
≤ 1	T														
1-1.5	T	T													
2	*	*	T												
3	*	*	T	T											
4	*	*	T	T	T										
6	*	*	W	T	T	T									
8	*	*	W	W	T	T	T								
10	*	*	W	W	W	T	T	T							
12	*	*	W	W	W	T	T	T	T						
14	*	*	W	W	W	W	T	T	T	T					
16	*	*	W	W	W	W	T	T	T	T	T				
18	*	*	W	W	W	W	W	T	T	T	T	T			
20	*	*	W	W	W	W	W	T	T	T	T	T	T		
24	*	*	W	W	W	W	W	W	T	T	T	T	T	T	
30	*	*	W	W	W	W	W	W	W	W	T	T	T	T	T

	Branch Pipe															
Valve Data																
Size(in)	0.5	0.75	1	1.5	2	3	4	6	8	10	12	14	16	18	20	22	24
Gate Valve																	
TAG	VG 50,SCRD				VG 80,FLANGED												
Rating	# 800				# 150,FF												
Plug Valve																	
TAG																	
Rating																	
Ball Valve																	
TAG	VB 50,SCRD				VB 86, Lever Operated												
Rating	# 800				# 150, FF,Flanged												
Globe Valve																	
TAG	VGL 50,SCRD				VGL 80												
Rating	# 800				# 150, FF,Flanged												
Check Valve																	
TAG	VC 50,SCRD,Lift Check				VC 80,Swing Check												
Rating	# 800				# 150, FF,Flanged												
Needle Valve																	
TAG	VN 11,SCRD																
Rating	# 800																
Butter Fly Valve																	
TAG																	
Rating																	

Notes Releted to Valve and Brach Connection

1. Wafer check valve to be avoided as far as possible; unless the avaliable space constraint does not allow normal check valve . The contractor to take approvel for use of wafer check Valve during pipe routing after extablishing the space constraint.
2. PMS to be read in conjuction with FS 2004 A.

Revision	Date	Description	Prepared By	Reviewed By	Approved By
Revision: 1	04-02-2016	Issued For Bid	PS	AKM	SJ

Offshore Design Section Engineering Services IS0-9001:2000	PIPING MATERIAL SPECIFICATION				Sheet No.	1 of 2
	Piping Class		Material	C.A	Spec.No	Revision: 2
	A5	# 150	90-10 Cu/Ni	Nil	2004A,Rev 9	Page No. 47
	Design Code:		**ASME B 31.3**			
	Service:	Fire Water and Raw Sea Water				

Pipe Data	EEMUA 144 Range																
Size(in)	0.5	0.75	1	1.5	2	3	4	6	8	10	12	14	16	18	20	22	24
O.D.mm	16	25	30	44.5	57	88.9	108	159	219.1	267	323.9	368	419	457.2	508	558.8	609.6
Sch.																	
WTmm	2	2	2.5	2.5	2.5	2.5	3	3	4	4.5	5.5	6.5	7				
M.T (%)	12.5	12.5	12.5	12.5	12.5	12.5	12.5	12.5	12.5	12.5	12.5	12.5	12.5				
TYPE	Seamless													Welded with 100% Radiography			
MOC	Annealed tube as per ASTM B 466 Copper Alloy No. 706 or BS 2871 CN 102																
Ends	PE																
Fittings Data																	
Size(in)	0.5	0.75	1	1.5	2	3	4	6	8	10	12	14	16	18	20	22	24
TYPE	Brazed					Butt Weld											
Rating						2.5	3	3	4	4.5	5.5	6.5	7				
MOC	Forged 90-10 Cu-Ni					90-10Cu-Ni											
Elbow																	
Tee																	
Red.																	
Cap																	
Coupl																	
Plug																	
Union																	
Elbowlet																	
Sockolet																	
Weldolet																	
Nipple																	
Swage																	
Flange																	
Size(in)	0.5	0.75	1	1.5	2	3	4	6	8	10	12	14	16	18	20	22	24
TYPE	Slip-On Composite Flange					WN Composite Flange/S.O. Bossed flange (Suitable for welding),											
MOC	Outer flange- A 105(Galv.) to # 150 of B-16.5 upto 24" and B 16.47A for 22" and 28" AND Inner Flange -90-10Ci-Ni																
FACE						FF											
STD.	EEMUA 145																
Blind Flange																	
Size(in)	0.5	0.75	1	1.5	2	3	4	6	8	10	12	14	16	18	20	22	24
MOC	ASTM A 105 with 3mm 90-10 CuNi weld deposite.																
Mechanical Joints																	
Stud Bolts	ASTM A 193 Gr. B7 to be used with insulating gasket/Sleeves																
Hex Nuts	ASTM A 194 Gr. 2H to be used with insulating gasket/Sleeves																
Gasket	3mm thick flat ring of neoprine rubber as ASME B 16.21																

Pressure-Temperature Rating				Maximum Hydrostatic Pressure	
Temp.,Deg F	Pressure, PSI	Temp,Deg C	Pressure, Kg/cm2	Pressure, psig	Pres.,Kg/cm2g
up to 167	230	Up to 75	16	345 psig	24 Kg/cm2
				Limited by Flange considereing flange as the weakest joint in piping system	

Notes Releted to Pipe,Fittings,Flanges,Gasket and Stud Bolts -Nuts

1. Welded fittings shall be 100% radiographed.
2. All alloy steel stud bolts and nuts shall be hot dip galvanized or electrogalvanized with minimum coating as per spec.
3. For flanged valves full face gaskets to be used and S.O. Bossed flage.
4. PMS to be read in conjuction with FS 2004 A.
5. For joints with material other than Cu-Ni Sacrificial spool and insulating gaskets are to used as indicated in design criteria.
6. Threading on Cu-Ni piping is not allowed.However, screwed fittings may be used for vent and drain connections only with company's approval.

Offshore Design Section Engineering Services IS0-9001:2000	**PIPING MATERIAL SPECIFICATION**				Sheet No.	**2 of 2**
	Piping Class	Material	C.A	Spec.No	Revision: 2	
	A5 / # 150	90-10 Cu/Ni	Nil	2004A,Rev 9	Page No.	48
	Design Code:	**ASME B 31.3**				
	Service:	Fire Water and Raw Sea Water				
	0					

Branch Table as per API RP 14E

Run Pipe \ Branch Pipe	≤ 1	1-1.5	2	3	4	6	8	10	12	14	16	18	20	24	30
≤ 1	T														
1-1.5	T	T													
2	*	*	T												
3	*	*	T	T											
4	*	*	T	T	T										
6	*	*	W	T	T	T									
8	*	*	W	W	T	T	T								
10	*	*	W	W	W	T	T	T							
12	*	*	W	W	W	T	T	T	T						
14	*	*	W	W	W	W	T	T	T	T					
16	*	*	W	W	W	W	T	T	T	T	T				
18	*	*	W	W	W	W	W	T	T	T	T	T			
20	*	*	W	W	W	W	W	T	T	T	T	T	T		
24	*	*	W	W	W	W	W	W	T	T	T	T	T	T	
30	*	*	W	W	W	W	W	W	W	W	T	T	T	T	T

LEGEND	
*	Sockolet
W	Weldolet
T	TEE

Valve Data

Size(in)	0.5	0.75	1	1.5	2	3	4	6	8	10	12	14	16	18	20	22	24
Gate Valve																	
TAG	VG 54,Brazing union end as per BS 1952 Series B Cl. 200					VG 87,FLANGED											
Rating	# 150					# 150, FF											
Plug Valve																	
TAG																	
Rating																	
Ball Valve																	
TAG	VB 54,Brazing union end as per BS 1952 Series B Cl. 200					VB 87,FLANGED											
Rating	# 150					# 150, FF											
Globe Valve																	
TAG	VGL 54,Brazing union end as per BS 1952 Series B Cl. 200					VGL 87,FLANGED											
Rating	# 150					# 150, FF											
Check Valve																	
TAG	VC 54,Brazing union end as per BS 1952 Series B Cl. 200					VC 87,FLANGED											
Rating	# 150					# 150, FF											
Needle Valve																	
TAG	VN 5,Brazing union end as per BS 1952 Series B Cl. 200																
Rating	# 150					# 150, FF											
Butter Fly Valve																	
TAG						VBF-22											
Rating						# 150, FF											

Notes Releted to Valve and Brach Connection

1. Wafer type Butterfly Valve may be used only in fire water(Clean water) service.
2. PMS to be read in conjuction with FS 2004 A.
3. Maximum temperature limit for all Ball Valve shall be 121 Degree C

Revision	Date	Description	Prepared By	Reviewed By	Approved By
Revision: 2	15.01.16	Issued For Bid	PS	AKM	SJ

	Offshore Design Section Engineering Services IS0-9001:2000				**PIPING MATERIAL SPECIFICATION**									Sheet No.		**1 of 2**	
					Piping Class				Material			C.A	Spec.No			Revision: 1	
					A6		# 150		SS 316L			Nil	2004A,Rev 9			Page No.	49
					Design Code:				**ASME B 31.3**								
					Service		Gas Turbine and Engine exhaust										
Pipe Data	ASME B 36.19																
Size(in)	0.5	0.75	1	1.5	2	3	4	6	8	10	12	14	16	18	20	22	24
O.D.mm	21.3	26.7	33.4	48.3	60.3	88.9	114.3	168.3	219.1	273.1	323.9	355.6	406.4	457.2	508	558.8	609.6
Sch.	40s	40s	40s	40s	10s	10s	10s	10s	10s								
WTmm	2.77	2.87	3.38	3.68	2.77	3.05	3.05	3.4	3.76	4mm	4mm	4mm	4mm	4mm	4mm	4.8mm	4.8mm
M.T (%)	12.5	12.5	12.5	12.5	12.5	12.5	12.5	12.5	12.5	12.5	12.5	12.5	12.5	12.5	12.5	12.5	12.5
TYPE	Seamless									EFW with 100% Radiography							
MOC	ASTM A 312 TP 316L									ASTM A 358 Gr. 316L Cl.1							
Ends	SW				BE												
Fittings Data																	
Size(in)	0.5	0.75	1	1.5	2	3	4	6	8	10	12	14	16	18	20	22	24
TYPE	SW				Butt Weld												
Rating	# 3000				10s	10s	10s	10s	10s	4mm	4mm	4mm	4mm	4mm	4mm	4.8mm	4.8mm
MOC	ASTM A 182 F 316L U.N.O				ASTM A 403 Gr. WP 316 L, Seamless U.N.O					ASTM A 403 Gr. WP 316 L, Welded with Joint Factor -1, U.N.O							
Elbow	ASMEB16.11				ASME B 16.9					ASME B 16.9							
Tee	ASMEB16.11				ASME B 16.9					ASME B 16.9							
Red.	ASMEB16.11				ASME B 16.9					ASME B 16.9							
Cap	ASMEB16.11				ASME B 16.9					ASME B 16.9							
Coupl	ASMEB16.11				ASME B 16.9					ASME B 16.9							
Plug	ASMEB16.11				ASME B 16.9					ASME B 16.9							
Union																	
Elbowlet	MSS SP 97				MSS SP 97,ASTM A 182 F316L					MSS SP 97,ASTM A 182 F316L							
Sockolet	MSS SP 97				MSS SP 97,ASTM A 182 F316L					MSS SP 97,ASTM A 182 F316L							
Weldolet	MSS SP 97				MSS SP 97,ASTM A 182 F316L					MSS SP 97,ASTM A 182 F316L							
Nipple	MSS SP 97,Same as pipe				MOC Same as pipe					MOC Same as pipe							
Swage	MSS SP 95,Same as pipe				MSS SP 95,MOC Same as pipe					MSS SP 95,MOC Same as pipe							
Flange																	
Size(in)	0.5	0.75	1	1.5	2	3	4	6	8	10	12	14	16	18	20	22	24
TYPE	SW				FF Lap Joint (LJ)												
MOC	ASTM A 182 F 316L				Stub end SS 316L + ASTM A 105 Backing flange (While connecting to FF flange use Slip -on(SO),FF, SS 316L flange												
FACE	RF-Serrated Finished-125 AARH				FF, Serrated Finished,Stub end and FF shall have 125AARH												
STD.	ASME B 16.5				ASME B 16.5, But welding ends as per ASME B 16.25												
Spectacle Blind/Spacer Blinds																	
Size(in)	0.5	0.75	1	1.5	2	3	4	6	8	10	12	14.00	16.00	18	20	22	24
MOC	ASTM A 182 F 316L																
Spectacle	ASME B 16.48											Spacer and blind as per ASME B 16.48					
Mechanical Joints																	
Stud Bolts	ASTM A 193 Gr. B8M																
Hex Nuts	ASTM A 194 Gr. 8M																
Gasket	ASME B 16.21,Flat Ring,1.58mm,CNAF																

Pressure-Temperature Rating				Maximum Hydrostatic Pressure	
Temp.,Deg F	Pressure, PSI	Temp,Deg C	Pressure, Kg/cm2	Pressure, psig	Pres.,Kg/cm2g
446	99.6	230	7	25 psig (Air)	Kg/cm2
850	65	454	4.5	Limited by Flange considereing flange as the weakest joint in piping system	

Notes Releted to Pipe,Fittings,Flanges,Gasket and Stud Bolts -Nuts

1. Welded fittings shall be 100% radiographed.
2.All alloy steel stud bolts and nuts shall be hot dip galvanized or electrogalvanized with minimum coating as per spec.
3. Spectacle blinds and spacer sizes and rating that are not available in ASME B 16.48 shall be as per manufacturer standard. Design shall be submitted to company for approval.
4. All pipe thread shall be as per ASME B 1.20.1
5. PMS to be read in conjuction with FS 2004 A.
6. Flanged galvanized spool to be used to minimize welding at site.
7. Weld Joint Factor for welded pipe shall be as per ASME B 31.3

Offshore Design Section Engineering Services IS0-9001:2000	**PIPING MATERIAL SPECIFICATION**				Sheet No.	**2 of 2**
	Piping Class	Material	C.A	Spec.No		Revision: 1
	A6 # 150	SS 316L	Nil	2004A,Rev 9	Page No.	50
	Design Code:	**ASME B 31.3**				
	Service	Gas Turbine and Engine exhaust				
	0					

Branch Table as per API RP 14E

LEGEND	
*	Sockolet
W	Weldolet
T	TEE

Run Pipe \ Branch Pipe	≤ 1	1-1.5	2	3	4	6	8	10	12	14	16	18	20	24	30
≤ 1	T														
1-1.5	T	T													
2	*	*	T												
3	*	*	T	T											
4	*	*	T	T	T										
6	*	*	W	T	T	T									
8	*	*	W	W	T	T	T								
10	*	*	W	W	W	T	T	T							
12	*	*	W	W	W	T	T	T	T						
14	*	*	W	W	W	W	T	T	T	T					
16	*	*	W	W	W	W	T	T	T	T	T				
18	*	*	W	W	W	W	W	T	T	T	T	T			
20	*	*	W	W	W	W	W	T	T	T	T	T	T		
24	*	*	W	W	W	W	W	W	T	T	T	T	T	T	
30	*	*	W	W	W	W	W	W	W	W	T	T	T	T	T

Valve Data

Size(in)	0.5	0.75	1	1.5	2	3	4	6	8	10	12	14	16	18	20	22	24
Gate Valve																	
TAG																	
Rating																	
Plug Valve																	
TAG																	
Rating																	
Ball Valve																	
TAG																	
Rating																	
Globe Valve																	
TAG																	
Rating																	
Check Valve																	
TAG																	
Rating																	
Needle Valve																	
TAG																	
Rating																	
Butter Fly Valve																	
TAG																	
Rating																	

Notes Releted to Valve and Brach Connection

1. PMS to be read in conjuction with FS 2004 A.

Revision	Date	Description	Prepared By	Reviewed By	Approved By
Revision: 1	15.01.16	Issued For Bid	PS	AKM	SJ

	Offshore Design Section Engineering Services IS0-9001:2000				**PIPING MATERIAL SPECIFICATION**									Sheet No.		**1 of 2**	
					Piping Class				Material			C.A	Spec.No			Revision:2	
					A8		# 150		CS- Galvanized			3mm	2004A,Rev 9			Page No.	51
					Design Code:				**ASME B 31.3**								
					Service		Over Board Lines										
Pipe Data	ASME B 36.10																
Size(in)	0.5	0.75	1	1.5	2	3	4	6	8	10	12	14	16	18	20	22	24
O.D.mm	21.3	26.7	33.4	48.3	60.3	88.9	114.3	168.3	219.1	273.1	323.9	355.6	406.4	457.2	508	558.8	609.6
Sch.	XXS	160	160	160	160	80	80	80	Std	Std	Std	Std	Std	Std	20	20	20
WTmm	7.47	5.56	6.35	7.14	8.74	7.62	8.56	10.97	8.18	9.27	9.52	9.52	9.52	9.52	9.52	9.52	9.52
M.T (%)	12.5	12.5	12.5	12.5	12.5	12.5	12.5	12.5	12.5	12.5	12.5	12.5	12.5				
TYPE	Seamless													LSAW with 100% Radiography			
MOC	ASTM A 106 Gr. B-Galvanized					ASTM A 106 Gr. B								API 5L Gr. B			
Ends	Screwed (SCRD)					BE								BE			
Fittings Data																	
Size(in)	0.5	0.75	1	1.5	2	3	4	6	8	10	12	14	16	18	20	22	24
TYPE	Screwed (SCRD)					Butt Weld											
Rating	# 9000	# 6000			160	80	80	80	Std	Std	Std	Std	Std	Std	20	20	20
MOC	ASTM A 105-Galvanized U.N.O					ASTM A 234 Gr. WPB, Seamless U.N.O								ASTM A234 Gr.WPB,Welded U.N.O			
Elbow	ASMEB16.11					ASME B 16.9								ASME B 16.9			
Tee	ASMEB16.11					ASME B 16.9								ASME B 16.9			
Red.	ASMEB16.11					ASME B 16.9								ASME B 16.9			
Cap	ASMEB16.11					ASME B 16.9								ASME B 16.9			
Coupl	ASMEB16.11					ASME B 16.9								ASME B 16.9			
Plug	ASMEB16.11					ASME B 16.9								ASME B 16.9			
Union	ASMEB16.11					BS 3799								BS 3799			
Elbowlet	MSS SP 97,ASTM A 105,Galvanized					MSS SP 97,ASTM A 105,Galvanized								MSS SP 97,ASTM A 105,Galvanized			
Sockolet	MSS SP 97,ASTM A 105,Galvanized					MSS SP 97,ASTM A 105,Galvanized								MSS SP 97,ASTM A 105,Galvanized			
Weldolet	MSS SP 97,ASTM A 105,Galvanized					MSS SP 97,ASTM A 105,Galvanized								MSS SP 97,ASTM A 105,Galvanized			
Nipple	MSS SP 97,Same as pipe,Galvanized					MOC Same as pipe								MOC Same as pipe			
Swage	MSS SP 95,Same as pipe,Galvanized					MSS SP95,MOC Same as pipe								MOC Same as pipe			
Flange																	
Size(in)	0.5	0.75	1	1.5	2	3	4	6	8	10	12	14	16	18	20	22	24
TYPE	Screwed (SCRD)					WN											
MOC	ASTM A 105					ASTM A 105											
FACE	RF-Serrated Finished					RF, Serrated Finished											
STD.	ASME B 16.5					ASME B 16.5, But welding ends as per ASME B 16.25											
Spectacle Blind/Spacer Blinds																	
Size(in)	0.5	0.75	1	1.5	2	3	4	6	8	10	12	14	16	18	20	22	24
MOC	ASTM A 105																
Spectacle	ASME B 16.48				ASME B 16.48							Spacer and blind as per ASME B 16.48					
Mechanical Joints																	
Stud Bolts	ASTM A 193 Gr. B7					ASTM A 193 Gr. B7											
Hex Nuts	ASTM A 194 Gr. 2H					ASTM A 194 Gr. 2H											
Gasket	ASME B 16.21,Flat Ring,1.58mm,CNAF					ASME B 16.21,Flat Ring,1.58mm,CNAF											

Pressure-Temperature Rating				Maximum Hydrostatic Pressure	
Temp.,Deg F	Pressure, PSI	Temp,Deg C	Pressure, Kg/cm2	Pressure, psig	Pres.,Kg/cm2g
(-) 4 to 100	285	(-) 20 to 38	20	450 psig	31.6 Kg/cm2
200	260	93	18.3	Limited by Flange considereing flange as the weakest joint in piping system	
300	230	149	16.2		
400	200	204	14.1		
500	170	260	11.9		

Notes Releted to Pipe,Fittings,Flanges,Gasket and Stud Bolts -Nuts

1. Welded fittings shall be 100% radiographed.
2.All alloy steel stud bolts and nuts shall be hot dip galvanized or electrogalvanized with minimum coating as per spec.
3. Spectacle blinds and spacer sizes and rating that are not available in ASME B 16.48 shall be as per manufacturer standard. Design shall be submitted to company for review and approval.
4. All pipe thread shall be as per ASME B 1.20.1
5. PMS to be read in conjuction with FS 2004 A.
6. Two jackscrew, 180 degree apart shall be provided in one of the flanges for all orifice flange
7. Weld Joint Factor for welded pipe shall be as per ASME B 31.3

Offshore Design Section Engineering Services IS0-9001:2000	**PIPING MATERIAL SPECIFICATION**				Sheet No.	**2 of 2**	
	Piping Class		Material	C.A	Spec.No	Revision:2	
	A8	# 150	CS- Galvanized	3mm	2004A,Rev 9	Page No.	52
	Design Code:		**ASME B 31.3**				
	Service	Over Board Lines					
	0						

Branch Table as per API RP 14E

Run Pipe	≤ 1	1-1.5	2	3	4	6	8	10	12	14	16	18	20	24	30
≤ 1	T														
1-1.5	T	T													
2	*	*	T												
3	*	*	T	T											
4	*	*	T	T	T										
6	*	*	W	T	T	T									
8	*	*	W	W	T	T	T								
10	*	*	W	W	W	T	T	T							
12	*	*	W	W	W	T	T	T	T						
14	*	*	W	W	W	W	T	T	T	T					
16	*	*	W	W	W	W	T	T	T	T	T				
18	*	*	W	W	W	W	W	T	T	T	T	T			
20	*	*	W	W	W	W	W	T	T	T	T	T	T		
24	*	*	W	W	W	W	W	W	T	T	T	T	T	T	
30	*	*	W	W	W	W	W	W	W	W	T	T	T	T	T
Branch Pipe	≤ 1	1-1.5	2	3	4	6	8	10	12	14	16	18	20	24	30

LEGEND	
*	Sockolet
W	Weldolet
T	TEE

Valve Data

Size(in)	0.5	0.75	1	1.5	2	3	4	6	8	10	12	14.00	16.00	18	20	22	24
Gate Valve																	
TAG	VG 41, SCRD				VG 61,FLANGED												
Rating	# 800				# 150,RF												
Plug Valve																	
TAG																	
Rating																	
Ball Valve																	
TAG	VB 42,SCRD				VB 61, Lever Operated			VB 63, Gear Operated									
Rating	# 800				# 150, RF												
Globe Valve																	
TAG	VGL 42,SW				VGL 60												
Rating	# 800				# 150, RF												
Check Valve																	
TAG	VC 41,SCRD,Lift Check				VC 85 (Wafer Check, Note -1)												
Rating	# 800				# 150, RF												
Needle Valve																	
TAG	VN 8,SCRD																
Rating	# 800																
Butter Fly Valve																	
TAG					VBF 1(WAFFER)												
Rating					#150, RF												

Notes Releted to Valve and Brach Connection

1. Wafer check valve to be avoided as far as possible; unless the available space constraint does not allow normal check valve. The contractor to take approvel for use of wafer check Valve during pipe routing after extablishing the space constraint.
2. Wafer type Butterfly Valve may be used only in fire water(Clean water) service.
3. PMS to be read in conjuction with FS 2004 A.
4. Maximum temperature limit for all Ball Valve shall be 121 Degree C
5. Exposed thread and piping assemblies etc . Shall be coated with zinc primer or epoxy coating after installation.
6. Flanged galvanized spool to be used to minimized welding at site.
7. All pipe fittings galvanized shall be hot dip galvanized with a minimum of 763 gram of galvanizing material per square meter of surface area in accordance with ASTM A 123/ASTM A 153.Pipe spool requireing welding shall be welded after welding. Spool shall be of such shape and dimenssion to suite the size and shape that the galvanizing shop can accomodate. Contractor to ensure of the spools such that the can be thouroughly cleaned from inside out before galvanizing.

Revision	Date	Description	Prepared By	Reviewed By	Approved By
Revision:2	15.01.16	Issued For Bid	PS	AKM	SJ

Offshore Design Section Engineering Services IS0-9001:2000	PIPING MATERIAL SPECIFICATION			Sheet No.	1 of 2
	Piping Class	Material	C.A	Spec.No	Revision: 1
	A9 # 150	SS 316	Nil	2004A,Rev 9	Page No. 53
	Design Code:	**ASME B 31.3**			
	Service	Lub Oil, Seal Oil and Chemical			

Pipe Data	ASME B 36.19																
Size(in)	0.5	0.75	1	1.5	2	3	4	6	8	10	12	14	16	18	20	22	24
O.D.mm	21.3	26.7	33.4	48.3	60.3	88.9	114.3	168.3	219.1	273.1	323.9	355.6	406.4	457.2	508	558.8	609.6
Sch.	40s	40s	40s	40s	10s	10s	10s	10s									
WTmm	2.77	2.87	3.38	3.68	2.77	3.05	3.05	3.4									
M.T (%)	12.5	12.5	12.5	12.5	12.5	12.5	12.5	12.5									
TYPE	Seamless																
MOC	ASTM A 312 TP 316									ASTM A 358 TP 316 with 100% Radiography.							
Ends	PE				BE												
Fittings Data																	
Size(in)	0.5	0.75	1	1.5	2	3	4	6	8	10	12	14	16	18	20	22	24
TYPE	SW				Butt Weld												
Rating	# 3000				10s	10s	10s	10s									
MOC	ASTM A 182 F 316 U.N.O				ASTM A 403 Gr. WP 316 , Seamless												
Elbow	ASMEB16.11				ASME B 16.9												
Tee	ASMEB16.11				ASME B 16.9												
Red.	ASMEB16.11				ASME B 16.9												
Cap	ASMEB16.11				ASME B 16.9												
Coupl	ASMEB16.11				ASME B 16.9												
Plug	ASMEB16.11				ASME B 16.9												
Union																	
Elbowlet	MSS SP 97				MSS SP 97,ASTM A 182 F316												
Sockolet	MSS SP 97				MSS SP 97,ASTM A 182 F316												
Weldolet	MSS SP 97				MSS SP 97,ASTM A 182 F316												
Nipple	MSS SP 97,Same as pipe				MOC Same as pipe												
Swage	MSS SP 95,Same as pipe				MSS SP 95MOC Same as pipe												
Flange																	
Size(in)	0.5	0.75	1	1.5	2	3	4	6	8	10	12	14	16	18	20	22	24
TYPE	SW				FF Lap Joint (LJ)												
MOC	ASTM A 182 F 316				Stub end A 182 F316 + ASTM A 105 Backing flange (While connecting to FF flange use Slip -on(SO),FF, 316 flange												
FACE	RF-Serrated Finished				FF, Serrated Finished												
STD.	ASME B 16.5				ASME B 16.5, But welding ends as per ASME B 16.25												
Spectacle Blind/Spacer Blinds																	
Size(in)	0.5	0.75	1	1.5	2	3	4	6	8	10	12	14	16	18	20	22	24
MOC	ASTM A 182 F 316																
Spectacle	ASME B 16.48											Spacer and blind as per ASME B 16.48					
Mechanical Joints																	
Stud Bolts	ASTM A 193 Gr. B7																
Hex Nuts	ASTM A 194 Gr. 2H																
Gasket	ASME B 16.20,5mm, SS Spiral wound with CNAF filler																

Pressure-Temperature Rating				Maximum Hydrostatic Pressure	
Temp.,Deg F	Pressure, PSI	Temp,Deg C	Pressure, Kg/cm2	Pressure, psig	Pres.,Kg/cm2g
60/100	275	16/38	19.3	425 psig	29.9 Kg/cm2
200	240	93	16.87	Limited by Flange considereing flange as the weakest joint in piping system	
400	195	204	13.7		
600	140	454	4.6		
850	65				

Notes Releted to Pipe,Fittings,Flanges,Gasket and Stud Bolts -Nuts

1. Welded fittings shall be 100% radiographed.
2.All alloy steel stud bolts and nuts shall be hot dip galvanized or electrogalvanized with minimum coating as per spec
3. Spectacle blinds and spacer sizes and rating that are not available in ASME B 16.48 shall be as per manufacturer standard. Design shall be submitted to company for approval.
4. All pipe thread shall be as per ASME B 1.20.1
5. PMS to be read in conjuction with FS 2004 A.
6. Contractor use Schedule 80 for sizes less than 1/1/2" for threaded pipe and fittings.
7. Two jackscrew, 180 degree apart shall be provided in one of the flanges for all orifice flange.

Offshore Design Section Engineering Services IS0-9001:2000	PIPING MATERIAL SPECIFICATION				Sheet No.	2 of 2
	Piping Class		Material	C.A	Spec.No	Revision: 1
	A9	# 150	SS 316	Nil	2004A,Rev 9	Page No. 54
	Design Code:		**ASME B 31.3**			
	Service	Lub Oil, Seal Oil and Chemical				
	0					

Branch Table as per API RP 14E

Run Pipe	Branch Pipe ≤ 1	1-1.5	2	3	4	6	8	10	12	14	16	18	20	24	30
≤ 1	T														
1-1.5	T	T													
2	*	*	T												
3	*	*	T	T											
4	*	*	T	T	T										
6	*	*	W	T	T	T									
8	*	*	W	W	T	T	T								
10	*	*	W	W	W	T	T	T							
12	*	*	W	W	W	T	T	T	T						
14	*	*	W	W	W	W	T	T	T	T					
16	*	*	W	W	W	W	T	T	T	T	T				
18	*	*	W	W	W	W	W	T	T	T	T	T			
20	*	*	W	W	W	W	W	T	T	T	T	T	T		
24	*	*	W	W	W	W	W	W	T	T	T	T	T	T	
30	*	*	W	W	W	W	W	W	W	W	T	T	T	T	T

LEGEND	
*	Sockolet
W	Weldolet
T	TEE

Valve Data

Size(in)	0.5	0.75	1	1.5	2	3	4	6	8	10	12	14	16	18	20	22	24
Gate Valve																	
TAG	VG-51				VG-81												
Rating	# 800, SW				# 150, RF												
Plug Valve																	
TAG																	
Rating																	
Ball Valve																	
TAG	VB-51				VB-91												
Rating	# 800, SW				# 150, RF												
Globe Valve																	
TAG	VGL - 51				VGL - 81												
Rating	# 800, SW				# 150, RF												
Check Valve																	
TAG	VC - 51, Lift Check				VC - 91, Swing Check												
Rating	# 800, SW				# 150, RF												
Needle Valve																	
TAG																	
Rating																	
Butter Fly Valve																	
TAG																	
Rating																	

Notes Releted to Valve and Brach Connection

1. PMS to be read in conjuction with FS 2004 A.

Revision	Date	Description	Prepared By	Reviewed By	Approved By
Revision: 1	22/7/2009	Issued For Bid	PS	GJ	GRP

	Offshore Design Section Engineering Services IS0-9001:2000				**PIPING MATERIAL SPECIFICATION**									Sheet No.		**1 of 2**	
					Piping Class				Material			C.A	Spec.No			Revision: 2	
					B9				# 300			SS 316	Nil	2004A,Rev 9		Page No.	55
					Design Code:				**ASME B 31.3**								
					Service	Lub Oil, Seal Oil and Chemical											
Pipe Data	ASME B 36.19																
Size(in)	0.5	0.75	1	1.5	2	3	4	6	8	10	12	14	16	18	20	22	24
O.D.mm	21.3	26.7	33.4	48.3	60.3	88.9	114.3	168.3	219.1	273.1	323.9	355.6	406.4	457.2	508	558.8	609.6
Sch.	40s	40s	40s	40s	10s	10s	10s	40s									
WTmm	2.77	2.87	3.38	3.68	2.77	3.05	3.05	7.11									
M.T (%)	12.5	12.5	12.5	12.5	12.5	12.5	12.5	12.5									
TYPE	Seamless																
MOC	ASTM A 312 TP 316									ASTM A 358 TP 316 with 100% Radiography.							
Ends	PE				BE												
Fittings Data																	
Size(in)	0.5	0.75	1	1.5	2	3	4	6	8	10	12	14	16	18	20	22	24
TYPE	SW				Butt Weld												
Rating	# 3000				10s	10s	10s	40s									
MOC	ASTM A 182 F 316 U.N.O				ASTM A 403 Gr. WP 316 , Seamless												
Elbow	ASMEB16.11				ASME B 16.9												
Tee	ASMEB16.11				ASME B 16.9												
Red.	ASMEB16.11				ASME B 16.9												
Cap	ASMEB16.11				ASME B 16.9												
Coupl	ASMEB16.11				ASME B 16.9												
Plug	ASMEB16.11				ASME B 16.9												
Union																	
Elbowlet	MSS SP 97				MSS SP 97,ASTM A 182 F316												
Sockolet	MSS SP 97				MSS SP 97,ASTM A 182 F316												
Weldolet	MSS SP 97				MSS SP 97,ASTM A 182 F316												
Nipple	MSS SP 97,Same as pipe				MOC Same as pipe												
Swage	MSS SP 95,Same as pipe				MSS SP 95MOC Same as pipe												
Flange																	
Size(in)	0.5	0.75	1	1.5	2	3	4	6	8	10	12	14	16	18	20	22	24
TYPE	SW				FF Lap Joint (LJ)												
MOC	ASTM A 182 F 316				Stub end A 182 F316 + ASTM A 105 Backing flange (While connecting to FF flange use Slip -on(SO),FF, 316 flange												
FACE	RF-Smooth Finished				FF, Smooth Finished												
STD.	ASME B 16.5				ASME B 16.5, But welding ends as per ASME B 16.25												
Spectacle Blind/Spacer Blinds																	
Size(in)	0.5	0.75	1	1.5	2	3	4	6	8	10	12	14	16	18	20	22	24
MOC	ASTM A 182 F 316																
Spectacle	ASME B 16.48											Spacer and blind as per ASME B 16.48					
Mechanical Joints																	
Stud Bolts	ASTM A 193 Gr. B7																
Hex Nuts	ASTM A 194 Gr. 2H																
Gasket	ASME B 16.20,5mm, SS Spiral wound with CNAF filler																

Pressure-Temperature Rating				Maximum Hydrostatic Pressure	
Temp.,Deg F	Pressure, PSI	Temp,Deg C	Pressure, Kg/cm2	Pressure, psig	Pres.,Kg/cm2g
60/100	720	16/38	50.6	1100 psig	77 Kg/cm2
200	620	93	43.6	Limited by Flange considereing flange as the weakest joint in piping system	
400	515	204	36.2		
600	450	316	31.6		

Notes Releted to Pipe,Fittings,Flanges,Gasket and Stud Bolts -Nuts

1. Welded fittings shall be 100% radiographed.
2.All alloy steel stud bolts and nuts shall be hot dip galvanized or electrogalvanized with minimum coating as per spec.
3. Spectacle blinds and spacer sizes and rating that are not available in ASME B 16.48 shall be as per manufacturer standard. Design shall be submitted to company for approval.
4. All pipe thread shall be as per ASME B 1.20.1
5. PMS to be read in conjuction with FS 2004 A.
6. Contractor use Schedule 80s for sizes less than 1/1/2" for threaded pipe and fittings.
7. Two jackscrew, 180 degree apart shall be provided in one of the flanges for all orifice flange.

Offshore Design Section Engineering Services IS0-9001:2000	PIPING MATERIAL SPECIFICATION				Sheet No.	2 of 2
	Piping Class	Material	C.A	Spec.No	Revision: 2	
	B9	# 300	SS 316	Nil	2004A,Rev 9	Page No. 56
	Design Code:	**ASME B 31.3**				
	Service	Lub Oil, Seal Oil and Chemical				
	0					

Branch Table as per API RP 14E

Run Pipe \ Branch Pipe	≤ 1	1-1.5	2	3	4	6	8	10	12	14	16	18	20	24	30
≤ 1	T														
1-1.5	T	T													
2	*	*	T												
3	*	*	T	T											
4	*	*	T	T	T										
6	*	*	W	T	T	T									
8	*	*	W	W	T	T	T								
10	*	*	W	W	W	T	T	T							
12	*	*	W	W	W	T	T	T	T						
14	*	*	W	W	W	W	T	T	T	T					
16	*	*	W	W	W	W	T	T	T	T	T				
18	*	*	W	W	W	W	W	T	T	T	T	T			
20	*	*	W	W	W	W	W	T	T	T	T	T	T		
24	*	*	W	W	W	W	W	W	T	T	T	T	T	T	
30	*	*	W	W	W	W	W	W	W	W	T	T	T	T	T

LEGEND	
*	Sockolet
W	Weldolet
T	TEE

Valve Data

Size(in)	0.5	0.75	1	1.5	2	3	4	6	8	10	12	14	16	18	20	22	24
Gate Valve																	
TAG	VG-51				VG-82												
Rating	# 800, SW				# 300, RF												
Plug Valve																	
TAG																	
Rating																	
Ball Valve																	
TAG	VB-51				VB-92												
Rating	# 800, SW				# 300, RF												
Globe Valve																	
TAG	VGL - 51				VGL - 82												
Rating	# 800, SW				# 300, RF												
Check Valve																	
TAG	VC - 51, Lift Check				VC - 92, Swing Check												
Rating	# 800, SW				# 300, RF												
Needle Valve																	
TAG																	
Rating																	
Butter Fly Valve																	
TAG																	
Rating																	

Notes Releted to Valve and Brach Connection

1. PMS to be read in conjuction with FS 2004 A.

Revision	Date	Description	Prepared By	Reviewed By	Approved By
Revision: 2	15.01.16	Issued For Bid	PS	AKM	SJ

ONGC	Offshore Design Section Engineering Services IS0-9001:2000				**PIPING MATERIAL SPECIFICATION**									Sheet No.		**1 of 2**	
					Piping Class				Material			C.A	Spec.No			Revision: 0	
					D9		# 600		SS 316			Nil	2004A,Rev 9			Page No	57
					Design Code:				**ASME B 31.3**								
					Service		Lub Oil, Seal Oil and Chemical										

Pipe Data	ASME B 36.19																
Size(in)	0.5	0.75	1	1.5	2	3	4	6	8	10	12	14	16	18	20	22	24
O.D.mm	21.3	26.7	33.4	48.3	60.3	88.9	114.3	168	219	273	324	355.6	406	457	508	558.8	609.6
Sch.	80s	80s	80s	80s	80s	80s	80s	80s									
WTmm	3.73	3.9	4.6	5.08	5.54	7.62	8.56	11									
M.T (%)	12.5	12.5	12.5	12.5	12.5	12.5	12.5	12.5									
TYPE	Seamless																
MOC	ASTM A 312 TP 316								ASTM A 358 TP 316 with 100% Radiography.								
Ends	PE				BE												
Fittings Data																	
Size(in)	0.5	0.75	1	1.5	2	3	4	6	8	10	12	14	16	18	20	22	24
TYPE	SW				Butt Weld												
Rating	# 3000				80s	80s	80s	80s									
MOC	ASTM A 182 F 316 U.N.O				STM A 403 Gr. WP 316 , Seamless												
Elbow	ASMEB16.11				ASME B 16.9												
Tee	ASMEB16.11				ASME B 16.9												
Red.	ASMEB16.11				ASME B 16.9												
Cap	ASMEB16.11				ASME B 16.9												
Coupl	ASMEB16.11				ASME B 16.9												
Plug	ASMEB16.11				ASME B 16.9												
Union																	
Elbowlet	MSS SP 97				SS SP 97,ASTM A 182 F316												
Sockolet	MSS SP 97				SS SP 97,ASTM A 182 F316												
Weldolet	MSS SP 97				SS SP 97,ASTM A 182 F316												
Nipple	MSS SP 97,Same as pipe				MOC Same as pipe												
Swage	MSS SP 95,Same as pipe				SS SP 95MOC Same as pipe												
Flange																	
Size(in)	0.5	0.75	1	1.5	2	3	4	6	8	10	12	14	16	18	20	22	24
TYPE	SW				WN												
MOC	ASTM A 182 F 316				ASTM A 182 F316												
FACE	RF-Smooth Finished				RF-Smooth Finish												
STD.	ASME B 16.5				ASME B 16.5, But welding ends as per ASME B 16.25												
Spectacle Blind/Spacer Blinds																	
Size(in)	0.5	0.75	1	1.5	2	3	4	6	8	10	12	14	16	18	20	22	24
MOC	ASTM A 182 F 316																
Spectacle	ASME B 16.48											Spacer and blind as per ASME B 16.48					
Mechanical Joints																	
Stud Bolt	ASTM A 193 Gr. B7																
Hex Nuts	ASTM A 194 Gr. 2H																
Gasket	ASME B 16.20,5mm, SS 316 Spiral wound with CNAF filler																

Pressure-Temperature Rating				Maximum Hydrostatic Pressure	
Temp.,Deg F	Pressure, PSI	Temp,Deg C	Pressure, Kg/cm2	Pressure, psig	Pres.,Kg/cm2g
60/100	1440	16/38	101.2	2160 psig	151.9 Kg/cm2
200	1240	93	87.2	Limited by Flange considereing flange as the weakest joint in piping system	
400	1025	204	72.06		
600	900	316	63,28		

Notes Releted to Pipe,Fittings,Flanges,Gasket and Stud Bolts -Nuts

1. Welded fittings shall be 100% radiographed.
2. All alloy steel stud bolts and nuts shall be hot dip galvanized or electrogalvanized with minimum coating as per spec.
3. Spectacle blinds and spacer sizes and rating that are not available in ASME B 16.48 shall be as per manufacturer standard. Design shall be submitted to company for approval.
4. All pipe thread shall be as per ASME B 1.20.1
5. PMS to be read in conjuction with FS 2004 A.
6. Contractor use Schedule 80s for sizes less than 1/1/2" for threaded pipe and fittings.
7. Two jackscrew, 180 degree apart shall be provided in one of the flanges for all orifice flange.

Offshore Design Section Engineering Services IS0-9001:2000	PIPING MATERIAL SPECIFICATION				Sheet No.	2 of 2	
	Piping Class		Material	C.A	Spec.No	Revision: 0	
	D9	# 600	SS 316	Nil	2004A,Rev 9	Page No	58
	Design Code:		**ASME B 31.3**				
	Service	Lub Oil, Seal Oil and Chemical					
	0						

Branch Table as per API RP 14E

Run Pipe \ Branch Pipe	≤ 1	1-1.5	2	3	4	6	8	10	12	14	16	18	20	24	30
≤ 1	T														
1-1.5	T	T													
2	*	*	T												
3	*	*	T	T											
4	*	*	T	T	T										
6	*	*	W	T	T	T									
8	*	*	W	W	T	T	T								
10	*	*	W	W	W	T	T	T							
12	*	*	W	W	W	T	T	T	T						
14	*	*	W	W	W	W	T	T	T	T					
16	*	*	W	W	W	W	T	T	T	T	T				
18	*	*	W	W	W	W	W	T	T	T	T	T			
20	*	*	W	W	W	W	W	T	T	T	T	T	T		
24	*	*	W	W	W	W	W	W	T	T	T	T	T	T	
30	*	*	W	W	W	W	W	W	W	W	T	T	T	T	T

LEGEND	
*	Sockolet
W	Weldolet
T	TEE

Valve Data

Size(in)	0.5	0.75	1	1.5	2	3	4	6	8	10	12	14	16	18	20	22	24
Gate Valve																	
TAG	VG-51				VG-92												
Rating	# 800, SW				# 600, RF												
Plug Valve																	
TAG																	
Rating																	
Ball Valve																	
TAG	VB-51				VB-92												
Rating	# 800, SW				# 600, RF												
Globe Valve																	
TAG	VGL - 51				VGL - 92												
Rating	# 800, SW				# 600, RF												
Check Valve																	
TAG	VC - 51, Lift Check				VC - 92, Swing Check												
Rating	# 800, SW				# 600, RF												
Needle Valve																	
TAG																	
Rating																	
Butter Fly Valve																	
TAG																	
Rating																	

Notes Releted to Valve and Brach Connection

1. PMS to be read in conjuction with FS 2004 A.

Revision	Date	Description	Prepared By	Reviewed By	Approved By
Revision: 0	15.01.16	Issued For Bid	PS	AKM	GJ

Offshore Design Section Engineering Services IS0-9001:2000					**PIPING MATERIAL SPECIFICATION**									Sheet No.		**1 of 2**	
					Piping Class				Material		C.A	Spec.No				Revision: 0	
					E9		# 900		SS 316		Nil	2004A,Rev 9				Page No	59
					Design Code:				**ASME B 31.3**								
					Service		Lub Oil, Seal Oil and Chemical										

Pipe Data	ASME B 36.19																
Size(in)	0.5	0.75	1	1.5	2	3	4	6	8	10	12	14	16	18	20	22	24
O.D.mm	21.3	26.7	33.4	48.3	60.3	88.9	114.3	168	219	273	324	355.6	406	457	508	558.8	609.6
Sch.	80S	80s	80s	160	80s	80s	80s	80s									
WTmm	3.73	3.9	4.6	7.14	5.54	7.62	8.56	11									
M.T (%)	12.5	12.5	12.5	12.5	12.5	12.5	12.5	12.5									
TYPE	Seamless																
MOC	ASTM A 312 TP 316									ASTM A 358 TP 316 with 100% Radiography.							
Ends	PE				BE												
Fittings Data																	
Size(in)	0.5	0.75	1	1.5	2	3	4	6	8	10	12	14	16	18	20	22	24
TYPE	SW				Butt Weld												
Rating	# 3000			#6000	80s	80s	80s	80s									
MOC	ASTM A 182 F 316 U.N.O				STM A 403 Gr. WP 316 , Seamless												
Elbow	ASMEB16.11				ASME B 16.9												
Tee	ASMEB16.11				ASME B 16.9												
Red.	ASMEB16.11				ASME B 16.9												
Cap	ASMEB16.11				ASME B 16.9												
Coupl	ASMEB16.11				ASME B 16.9												
Plug	ASMEB16.11				ASME B 16.9												
Union																	
Elbowlet	MSS SP 97				SS SP 97,ASTM A 182 F316												
Sockolet	MSS SP 97				SS SP 97,ASTM A 182 F316												
Weldolet	MSS SP 97				SS SP 97,ASTM A 182 F316												
Nipple	MSS SP 97,Same as pipe				MOC Same as pipe												
Swage	MSS SP 95,Same as pipe				SS SP 95MOC Same as pipe												
Flange																	
Size(in)	0.5	0.75	1	1.5	2	3	4	6	8	10	12	14	16	18	20	22	24
TYPE	SW				WN												
MOC	ASTM A 182 F 316				A 182 F316												
FACE	RTJ-Note 8				RTJ-Note 8												
STD.	ASME B 16.5				ASME B 16.5, But welding ends as per ASME B 16.25												
Spectacle Blind/Spacer Blinds																	
Size(in)	0.5	0.75	1	1.5	2	3	4	6	8	10	12	14	16	18	20	22	24
MOC	ASTM A 182 F 316																
Spectacle	ASME B 16.48											Spacer and blind as per ASME B 16.48					
Mechanical Joints																	
Stud Bolt	ASTM A 193 Gr. B7																
Hex Nuts	ASTM A 194 Gr. 2H																
Gasket	ASME B 16.20,OCT ring of SS316 with Max. Hardness of 120 BHN																

Pressure-Temperature Rating				Maximum Hydrostatic Pressure	
Temp.,Deg F	Pressure, PSI	Temp,Deg C	Pressure, Kg/cm2	Pressure, psig	Pres.,Kg/cm2g
60/100	2160	16/38	151.9	3240 psig	227.8 Kg/cm2
200	1860	93	130.8	Limited by Flange considereing flange as the weakest joint in piping system	
400	1540	204	108.3		
600	1355	316	95.3		

Notes Releted to Pipe,Fittings,Flanges,Gasket and Stud Bolts -Nuts

1. Welded fittings shall be 100% radiographed.
2. All alloy steel stud bolts and nuts shall be hot dip galvanized or electrogalvanized with minimum coating as per spec.
3. Spectacle blinds and spacer sizes and rating that are not available in ASME B 16.48 shall be as per manufacturer standard. Design shall be submitted to company for approval.
4. All pipe thread shall be as per ASME B 1.20.1
5. PMS to be read in conjuction with FS 2004 A.
6. Contractor use Schedule 80s for sizes less than 1/1/2" for threaded pipe and fittings.
7. Two jackscrew, 180 degree apart shall be provided in one of the flanges for all orifice flange.
8. RTJ Groove hardness shall be 140 BHN

Offshore Design Section Engineering Services IS0-9001:2000	**PIPING MATERIAL SPECIFICATION**				Sheet No.	**2 of 2**	
	Piping Class		Material	C.A	Spec.No	Revision: 0	
	E9	# 900	SS 316	Nil	2004A,Rev 9	Page No	60
	Design Code:		**ASME B 31.3**				
	Service	Lub Oil, Seal Oil and Chemical					
	0						

Branch Table as per API RP 14E

Run Pipe \ Branch Pipe	≤ 1	1-1.5	2	3	4	6	8	10	12	14	16	18	20	24	30
≤ 1	T														
1-1.5	T	T													
2	*	*	T												
3	*	*	T	T											
4	*	*	T	T	T										
6	*	*	W	T	T	T									
8	*	*	W	W	T	T	T								
10	*	*	W	W	W	T	T	T							
12	*	*	W	W	W	T	T	T	T						
14	*	*	W	W	W	W	T	T	T	T					
16	*	*	W	W	W	W	T	T	T	T	T				
18	*	*	W	W	W	W	W	T	T	T	T	T			
20	*	*	W	W	W	W	W	T	T	T	T	T	T		
24	*	*	W	W	W	W	W	W	T	T	T	T	T	T	
30	*	*	W	W	W	W	W	W	W	W	T	T	T	T	T

LEGEND	
*	Sockolet
W	Weldolet
T	TEE

Valve Data

Size(in)	0.5	0.75	1	1.5	2	3	4	6	8	10	12	14	16	18	20	22	24
Gate Valve																	
TAG	VG-61				VG-102												
Rating	# 1500, SW				# 900, RTJ												
Plug Valve																	
TAG																	
Rating																	
Ball Valve																	
TAG	VB-61				VB-102												
Rating	# 1500, SW				# 900, RTJ												
Globe Valve																	
TAG	VGL - 61				VGL - 102												
Rating	# 1500, SW				# 900, RTJ												
Check Valve																	
TAG	VC - 51, Lift Check				VC - 102, Swing Check												
Rating	# 1500, SW				# 900, RTJ												
Needle Valve																	
TAG																	
Rating																	
Butter Fly Valve																	
TAG																	
Rating																	

Notes Releted to Valve and Brach Connection

1. PMS to be read in conjuction with FS 2004 A.

Revision	Date	Description	Prepared By	Reviewed By	Approved By
Revision: 0	15.01.16	Issued For Bid	PS	AKM	SJ

	Offshore Design Section Engineering Services IS0-9001:2000				**PIPING MATERIAL SPECIFICATION**									Sheet No.		**1 of 2**	
					Piping Class				Material			C.A	Spec.No			Revision: 0	
					A 10		# 150		SS 316 L			1.5mm	2004A,Rev 9			Page No.	61
					Design Code: ASME B 31.3 and other applicable Code NACE-MR-01-75/ISO-15156-1/2/3												
					Service: Corrosive HydroCarbon Service-Sour Liquid and Vapour.												
					Instrument Gas Header including 1st Bolck Valve												
Pipe Data	ASME B 36.19																
Size(in)	0.5	0.75	1	1.5	2	3	4	6	8	10	12	14	16	18	20	22	24
O.D.mm	21.3	26.7	33.4	48.3	60.3	88.9	114.3	168.3	219.1	273.1	323.9	355.6	406.4	457.2	508	558.8	609.6
Sch.	80s	80s	80s	80s	40s	40s	40s	40s	40s								
WTmm	3.73	3.91	4.55	5.04	3.91	5.49	6.02	7.11	8.18								
M.T (%)	12.5	12.5	12.5	12.5	12.5	12.5	12.5	12.5	12.5								
TYPE	Seamless																
MOC	ASTM A 312 TP 316L									ASTM A 358 TP 316L with 100% Radiography.							
Ends	PE				BE												
Fittings Data																	
Size(in)	0.5	0.75	1	1.5	2	3	4	6	8	10	12	14.00	16.00	18	20	22	24
TYPE	SW				Butt Weld												
Rating	# 3000				40s	40s	40s	40s	40s								
MOC	ASTM A 182 F 316L U.N.O				ASTM A 403 Gr. WP 316L , Seamless												
Elbow	ASMEB16.11				ASME B 16.9												
Tee	ASMEB16.11				ASME B 16.9												
Red.	ASMEB16.11				ASME B 16.9												
Cap	ASMEB16.11				ASME B 16.9												
Coupl	ASMEB16.11				ASME B 16.9												
Plug	ASMEB16.11				ASME B 16.9												
Union																	
Elbowlet	MSS SP 97				MSS SP 97,ASTM A 182 F 316L												
Sockolet	MSS SP 97				MSS SP 97,ASTM A 182 F 316L												
Weldolet	MSS SP 97				MSS SP 97,ASTM A 182 F 316L												
Nipple	MSS SP 97,Same as pipe				MOC Same as pipe												
Swage	MSS SP 95,Same as pipe				MSS SP 95,Same as pipe												
Flange																	
Size(in)	0.5	0.75	1	1.5	2	3	4	6	8	10	12	14	16	18	20	22	24
TYPE	SW				FF Lap Joint (LJ)												
MOC	ASTM A 182 F 316 L				Stub end A 182 F316L + ASTM A 105 Backing flange (While connecting to FF flange use Slip -on(SO),FF, 316L flange												
FACE	RF-Serrated Finished				FF, Serrated Finished												
STD.	ASME B 16.5				ASME B 16.5, But welding ends as per ASME B 16.25												
Spectacle Blind/Spacer Blinds																	
Size(in)	0.5	0.75	1	1.5	2	3	4	6	8	10	12	14	16	18	20	22	24
MOC	ASTM A 182 F 316 L																
Spectacle	ASME B 16.48											Spacer and blind as per ASME B 16.48					
Mechanical Joints																	
Stud Bolt	ASTM A 193 Gr. B7M																
Hex Nuts	ASTM A 194 Gr. 2HM																
Gasket	ASME B 16.20,5mm, SS Spiral wound with CNAF filler																

Pressure-Temperature Rating				Maximum Hydrostatic Pressure	
Temp.,Deg F	Pressure, PSI	Temp,Deg C	Pressure, Kg/cm2	Pressure, psig	Pres.,Kg/cm2g
60/100	230	16/38	16.17	350 psig	25 Kg/cm2
200	195	93	13.7	Limited by Flange considereing flange as the weakest joint in piping system	
300	160	149	12.3		
400	145	204	11.25		
500	65	260	10.2		

Notes Releted to Pipe,Fittings,Flanges,Gasket and Stud Bolts -Nuts

1. Welded fittings shall be 100% radiographed.
2.All alloy steel stud bolts and nuts shall be hot dip galvanized or electrogalvanized with minimum coating as per spec.
3. Spectacle blinds and spacer sizes and rating that are not available in ASME B 16.48 shall be as per manufacturer standard. Design shall be submitted to company for review and approval.
4. All pipe thread shall be as per ASME B 1.20.1
5. PMS to be read in conjuction with FS 2004 A.
6. Contractor use Schedule 80 for sizes less than 1/1/2" for threaded pipe and fittings.
7. Minimum sizes shall be 0.75 inch for piping other than air,instrument water and manufacturer's standard piping.

Offshore Design Section Engineering Services IS0-9001:2000	PIPING MATERIAL SPECIFICATION				Sheet No.	2 of 2
	Piping Class		Material	C.A	Spec.No	Revision: 0
	A 10	# 150	SS 316 L	1.5mm	2004A,Rev 9	Page No. 62
	Design Code: ASME B 31.3 and other applicable Code NACE-MR-01-75/ISO-15156-1/2/3					
	Service:	Corrosive HydroCarbon Service-Sour Liquid and Vapour.				
		Instrument Gas Header including 1st Bolck Valve				

Branch Table as per API RP 14E

LEGEND	
*	Sockolet
W	Weldolet
T	TEE

Run Pipe	≤ 1	1-1.5	2	3	4	6	8	10	12	14	16	18	20	24	30
≤ 1	T														
1-1.5	T	T													
2	*	*	T												
3	*	*	T	T											
4	*	*	T	T	T										
6	*	*	W	T	T	T									
8	*	*	W	W	T	T	T								
10	*	*	W	W	W	T	T	T							
12	*	*	W	W	W	T	T	T	T						
14	*	*	W	W	W	W	T	T	T	T					
16	*	*	W	W	W	W	T	T	T	T	T				
18	*	*	W	W	W	W	W	T	T	T	T	T			
20	*	*	W	W	W	W	W	T	T	T	T	T	T		
24	*	*	W	W	W	W	W	W	T	T	T	T	T	T	
30	*	*	W	W	W	W	W	W	W	W	T	T	T	T	T

	Branch Pipe																
Valve Data																	
Size(in)	0.5	0.75	1	1.5	2	3	4	6	8	10	12	14	16	18	20	22	24
Gate Valve																	
TAG																	
Rating	# 800, SW				# 150, RF												
Plug Valve																	
TAG																	
Rating																	
Ball Valve																	
TAG	VB-107				VB-116												
Rating	# 800, SW				# 150, RF												
Globe Valve																	
TAG	VGL - 107				VGL - 116												
Rating	# 800, SW				# 150, RF												
Check Valve																	
TAG	VC - 107, Lift Check				VC - 116, Swing Check												
Rating	# 800, SW				# 150, RF												
Needle Valve																	
TAG																	
Rating																	
Butter Fly Valve																	
TAG																	
Rating																	

Notes Releted to Valve and Brach Connection

1. PMS to be read in conjuction with FS 2004 A.

Revision	Date	Description	Prepared By	Reviewed By	Approved By
Revision: 0	04-08-2008	Issued For Bid	PS	GJ	GRP

ONGC	Offshore Design Section Engineering Services IS0-9001:2000				**PIPING MATERIAL SPECIFICATION**									Sheet No.		**1 of 2**	
					Piping Class				Material		C.A	Spec.No				Revision: 0	
					B 10		# 300		SS 316 L		1.5mm	2004A,Rev 9				Page No.	63
					Design Code: ASME B 31.3 and other applicable Code NACE-MR-01-75/ISO-15156-1/2/3												
					Service	Corrosive HydroCarbon Service-Sour Liquid and Vapour.											

Pipe Data	ASME B 36.19																
Size(in)	0.5	0.75	1	1.5	2	3	4	6	8	10	12	14	16	18	20	22	24
O.D.mm	21.3	26.7	33.4	48.3	60.3	88.9	114.3	168.3	219.1	273	323.9	355.6	406.4	457.2	508	558.8	609.6
Sch.	160	160	160	160	40s	40s	40s	40s	40s								
WTmm	4.77	5.6	6.4	7.14	3.91	5.49	6.02	7.11	8.18								
M.T (%)	12.5	12.5	12.5	12.5	12.5	12.5	12.5	12.5	12.5								
TYPE	Seamless																
MOC	ASTM A 312 TP 316L									ASTM A 358 TP 316L with 100% Radiography.							
Ends	PE				BE												
Fittings Data																	
Size(in)	0.5	0.75	1	1.5	2	3	4	6	8	10	12	14.00	16.00	18	20	22	24
TYPE	SW				Butt Weld												
Rating	# 6000				40s	40s	40s	40s	40s								
MOC	ASTM A 182 F 316L U.N.O				ASTM A 403 Gr. WP 316L , Seamless												
Elbow	ASMEB16.11				ASME B 16.9												
Tee	ASMEB16.11				ASME B 16.9												
Red.	ASMEB16.11				ASME B 16.9												
Cap	ASMEB16.11				ASME B 16.9												
Coupl	ASMEB16.11				ASME B 16.9												
Plug	ASMEB16.11				ASME B 16.9												
Union																	
Elbowlet	MSS SP 97				MSS SP 97,ASTM A 182 F 316L												
Sockolet	MSS SP 97				MSS SP 97,ASTM A 182 F 316L												
Weldolet	MSS SP 97				MSS SP 97,ASTM A 182 F 316L												
Nipple	MSS SP 97,Same as pipe				MOC Same as pipe												
Swage	MSS SP 95,Same as pipe				MSS SP 95,Same as pipe												
Flange																	
Size(in)	0.5	0.75	1	1.5	2	3	4	6	8	10	12	14	16	18	20	22	24
TYPE	SW				WN												
MOC	ASTM A 182 F 316 L				A 182 F316L												
FACE	RF-Smooth Finished				RF, Smooth Finished												
STD.	ASME B 16.5				ASME B 16.5, But welding ends as per ASME B 16.25												
Spectacle Blind/Spacer Blinds																	
Size(in)	0.5	0.75	1	1.5	2	3	4	6	8	10	12	14	16	18	20	22	24
MOC	ASTM A 182 F 316 L																
Spectacle	ASME B 16.48											Spacer and blind as per ASME B 16.48					
Mechanical Joints																	
Stud Bolt	ASTM A 193 Gr. B7M																
Hex Nuts	ASTM A 194 Gr. 2HM																
Gasket	ASME B 16.20,5mm, SS 316L Spiral wound with CNAF filler																

Pressure-Temperature Rating				Maximum Hydrostatic Pressure	
Temp.,Deg F	Pressure, PSI	Temp,Deg C	Pressure, Kg/cm2	Pressure, psig	Pres.,Kg/cm2g
60/100	600	16/38	42.19	900 psig	63.3 Kg/cm2
200	505	93	35.51	Limited by Flange considereing flange as the weakest joint in piping system	

Notes Releted to Pipe,Fittings,Flanges,Gasket and Stud Bolts -Nuts

1. Welded fittings shall be 100% radiographed.
2. All alloy steel stud bolts and nuts shall be not dip galvanized or electrogalvanized with minimum coating as per [illegible]
3. Spectacle blinds and spacer sizes and rating that are not available in ASME B 16.48 shall be as per manufacturer standard. Design shall be submitted to company for review and approval
4. All pipe thread shall be as per ASME B 1.20.1
5. PMS to be read in conjuction with FS 2004 A.
6. Contractor use Schedule 80 for sizes less than 1/1/2" for threaded pipe and fittings.
7. Minimum sizes shall be 0.75 inch for piping other than air,instrument water and manufacturer's standard piping.

Offshore Design Section Engineering Services IS0-9001:2000	PIPING MATERIAL SPECIFICATION				Sheet No.	2 of 2	
	Piping Class		Material	C.A	Spec.No	Revision: 0	
	B 10	# 300	SS 316 L	1.5mm	2004A,Rev 9	Page No.	64
	Design Code: ASME B 31.3 and other applicable Code NACE-MR-01-75/ISO-15156-1/2/3						
	Service:	Corrosive HydroCarbon Service-Sour Liquid and Vapour.					
	0						

Branch Table as per API RP 14E

Run Pipe \ Branch Pipe	≤ 1	1-1.5	2	3	4	6	8	10	12	14	16	18	20	24	30
≤ 1	T														
1-1.5	T	T													
2	*	*	T												
3	*	*	T	T											
4	*	*	T	T	T										
6	*	*	W	T	T	T									
8	*	*	W	W	T	T	T								
10	*	*	W	W	W	T	T	T							
12	*	*	W	W	W	T	T	T	T						
14	*	*	W	W	W	W	T	T	T	T					
16	*	*	W	W	W	W	T	T	T	T	T				
18	*	*	W	W	W	W	W	T	T	T	T	T			
20	*	*	W	W	W	W	W	T	T	T	T	T	T		
24	*	*	W	W	W	W	W	W	T	T	T	T	T	T	
30	*	*	W	W	W	W	W	W	W	W	T	T	T	T	T

LEGEND	
*	Sockolet
W	Weldolet
T	TEE

Valve Data

Size(in)	0.5	0.75	1	1.5	2	3	4	6	8	10	12	14	16	18	20	22	24
Gate Valve																	
TAG						VB-151											
Rating	# 800, SW					# 300, RF											
Plug Valve																	
TAG																	
Rating																	
Ball Valve																	
TAG	VB-107					VB-152											
Rating	# 800, SW					# 300, RF											
Globe Valve																	
TAG	VGL - 107					VGL - 154											
Rating	# 800, SW					# 300, RF											
Check Valve																	
TAG	VC - 107, Lift Check					VC - 154, Swing Check											
Rating	# 800, SW					# 300, RF											
Needle Valve																	
TAG																	
Rating																	
Butter Fly Valve																	
TAG																	
Rating																	

Notes Releted to Valve and Brach Connection

1. PMS to be read in conjuction with FS 2004 A.

Revision: 0	15.01.16	Issued For Bid	PS	AKM	SJ
Revision	Date	Description	Prepared By	Reviewed By	Approved By

Offshore Design Section Engineering Services IS0-9001:2000	PIPING MATERIAL SPECIFICATION				Sheet No.	1 of 2
	Piping Class	Material	C.A	Spec.No	Revision:0	
	D 10	# 600	SS 316 L	1.5mm	2004A,Rev 9	Page No. 65
	Design Code: ASME B 31.3 and other applicable Code NACE-MR-01-75/ISO-15156-1/2/3					
	Service:	Corrosive HydroCarbon Service-Sour Liquid and Vapour.				

Pipe Data	ASME B 36.19																
Size(in)	0.5	0.75	1	1.5	2	3	4	6	8	10	12	14	16	18	20	22	24
O.D.mm	21.3	26.7	33.4	48.3	60.3	88.9	114.3	168.3	219.1	273.1	323.9	355.6	406.4	457.2	508	558.8	609.6
Sch.	XXS	160	160	160	80s	80s	80s	80s	80s								
WTmm	7.47	5.6	6.4	7.14	5.54	7.62	8.56	10.97	12.7								
M.T (%)	12.5	12.5	12.5	12.5	12.5	12.5	12.5	12.5	12.5								
TYPE	Seamless																
MOC	ASTM A 312 TP 316L																
Ends	PE				BE												
Fittings Data																	
Size(in)	0.5	0.75	1	1.5	2	3	4	6	8	10	12	14	16	18	20	22	24
TYPE	SW				Butt Weld												
Rating	# 9000	# 6000			80s	80s	80s	80s	80s								
MOC	ASTM A 182 F 316L U.N.O				ASTM A 403 Gr. WP 316L , Seamless												
Elbow	ASMEB16.11				ASME B 16.9												
Tee	ASMEB16.11				ASME B 16.9												
Red.	ASMEB16.11				ASME B 16.9												
Cap	ASMEB16.11				ASME B 16.9												
Coupl	ASMEB16.11				ASME B 16.9												
Plug	ASMEB16.11				ASME B 16.9												
Union																	
Elbowlet	MSS SP 97				MSS SP 97,ASTM A 182 F 316L												
Sockolet	MSS SP 97				MSS SP 97,ASTM A 182 F 316L												
Weldolet	MSS SP 97				MSS SP 97,ASTM A 182 F 316L												
Nipple	MSS SP 97,Same as pipe				MOC Same as pipe												
Swage	MSS SP 95,Same as pipe				MSS SP 95, MOC Same as pipe												
Flange																	
Size(in)	0.5	0.75	1	1.5	2	3	4	6	8	10	12	14	16	18	20	22	24
TYPE	SW				WN												
MOC	ASTM A 182 F 316 L				ASTM A 182 F 316 L												
FACE	RF-Smooth Finished				RF, Smooth Finished												
STD.	ASME B 16.5				B 16.5, But welding ends as per B 16.25												
Spectacle Blind/Spacer Blinds																	
Size(in)	0.5	0.75	1	1.5	2	3	4	6	8	10	12	14	16	18	20	22	24
MOC	ASTM A 182 F 316 L																
Spectacle	ASME B 16.48																
Mechanical Joints																	
Stud Bolt	ASTM A 193 Gr. B7M																
Hex Nuts	ASTM A 194 Gr. 2HM																
Gasket	ASME B 16.20,5mm, SS 361L Spiral wound with CNAF filler																

Pressure-Temperature Rating				Maximum Hydrostatic Pressure	
Temp.,Deg F	Pressure, PSI	Temp,Deg C	Pressure, Kg/cm2	Pressure, psig	Pres.,Kg/cm2g
60/100	1200	16/38	84.4	1800 psig	126.6 Kg/cm2
200	1015	93	71.38	Limited by Flange considereing flange as the weakest joint in piping system	

Notes Releted to Pipe,Fittings,Flanges,Gasket and Stud Bolts -Nuts

1. Welded fittings shall be 100% radiographed.
2. All alloy steel stud bolts and nuts shall be hot dip galvanized or electrogalvanized with minimum coating as per spec.
3. Spectacle blinds and spacer sizes and rating that are not available in ASME B 16.48 shall be as per manufacturer standard. Design shall be submitted to company for approval.
4. All pipe thread shall be as per ASME B 1.20.1
5. PMS to be read in conjuction with FS 2004 A.
6. Contractor use Schedule 80 for sizes less than 1/1/2" for threaded pipe and fittings.
7. Minimum sizes shall be 0.75 inch for piping other than air,instrument water and manufacturer's standard piping.

Offshore Design Section Engineering Services IS0-9001:2000	**PIPING MATERIAL SPECIFICATION**				Sheet No.	**2 of 2**	
	Piping Class		Material	C.A	Spec.No	Revision:0	
	D 10	# 600	SS 316 L	1.5mm	2004A,Rev 9	Page No.	66
	Design Code: ASME B 31.3 and other applicable Code NACE-MR-01-75/ISO-15156-1/2/3						
	Service:	Corrosive HydroCarbon Service-Sour Liquid and Vapour.					
	0						

Branch Table as per API RP 14E

Run Pipe \ Branch Pipe	≤ 1	1-1.5	2	3	4	6	8	10	12	14	16	18	20	24	30
≤ 1	T														
1-1.5	T	T													
2	*	*	T												
3	*	*	T	T											
4	*	*	T	T	T										
6	*	*	W	T	T	T									
8	*	*	W	W	T	T	T								
10	*	*	W	W	W	T	T	T							
12	*	*	W	W	W	T	T	T	T						
14	*	*	W	W	W	W	T	T	T	T					
16	*	*	W	W	W	W	T	T	T	T	T				
18	*	*	W	W	W	W	W	T	T	T	T	T			
20	*	*	W	W	W	W	W	T	T	T	T	T	T		
24	*	*	W	W	W	W	W	W	T	T	T	T	T	T	
30	*	*	W	W	W	W	W	W	W	W	T	T	T	T	T

LEGEND	
*	Sockolet
W	Weldolet
T	TEE

Valve Data

Size(in)	0.5	0.75	1	1.5	2	3	4	6	8	10	12	14	16	18	20	22	24
Gate Valve																	
TAG	VG-132				VB-255												
Rating	# 1500, SW				# 900, RTJ FLGD												
Plug Valve																	
TAG																	
Rating																	
Ball Valve																	
TAG	VB-131				VB-258												
Rating	# 800, SW				# 600, RF												
Globe Valve																	
TAG	VGL - 131				VGL - 255												
Rating	# 800, SW				# 600, RF												
Check Valve																	
TAG	VC - 131, Lift Check				VC - 255, Swing Check												
Rating	# 800, SW				# 600, RF												
Needle Valve																	
TAG	VN-111																
Rating	# 800, SW																
Butter Fly Valve																	
TAG																	
Rating																	

Notes Releted to Valve and Brach Connection

1. PMS to be read in conjuction with FS 2004 A.

Revision:0	15.01.16	Issued For Bid	PS	AKM	SJ
Revision	Date	Description	Prepared By	Reviewed By	Approved By

Offshore Design Section Engineering Services IS0-9001:2000	PIPING MATERIAL SPECIFICATION				Sheet No.	1 of 2
	Piping Class	Material	C.A	Spec.No	Revision:0	
	E 10 # 900	SS 316 L	1.5mm	2004A,Rev 9	Page No.	67
	Design Code: ASME B 31.3 and other applicable Code NACE-MR-01-75/ISO-15156-1/2/3					
	Service: Corrosive HydroCarbon Service-Sour Liquid and Vapour.					

Pipe Data	ASME B 36.19																
Size(in)	0.5	0.75	1	1.5	2	3	4	6	8	10	12	14	16	18	20	22	24
O.D.mm	21.3	26.7	33.4	48.3	60.3	88.9	114.3	168.3	219.1	273.1	323.9	355.6	406.4	457.2	508	558.8	609.6
Sch.	XXS	160	160	160	160	80s	120	120	100								
WTmm	7.47	5.6	6.4	7.14	8.74	7.62	11.12	14.27	15.1								
M.T (%)	12.5	12.5	12.5	12.5	12.5	12.5	12.5	12.5	12.5								
TYPE	Seamless																
MOC	ASTM A 312 TP 316L																
Ends	PE				BE												
Fittings Data																	
Size(in)	0.5	0.75	1	1.5	2	3	4	6	8	10	12	14	16	18	20	22	24
TYPE	SW				Butt Weld												
Rating	# 9000	# 6000			160	80s	120	120	100								
MOC	ASTM A 182 F 316L U.N.O				ASTM A 403 Gr. WP 316L , Seamless												
Elbow	ASMEB16.11				ASME B 16.9												
Tee	ASMEB16.11				ASME B 16.9												
Red.	ASMEB16.11				ASME B 16.9												
Cap	ASMEB16.11				ASME B 16.9												
Coupl	ASMEB16.11				ASME B 16.9												
Plug	ASMEB16.11				ASME B 16.9												
Union																	
Elbowlet	MSS SP 97				MSS SP 97,ASTM A 182 F 316L												
Sockolet	MSS SP 97				MSS SP 97,ASTM A 182 F 316L												
Weldolet	MSS SP 97				MSS SP 97,ASTM A 182 F 316L												
Nipple	MSS SP 97,Same as pipe				MOC Same as pipe												
Swage	MSS SP 95,Same as pipe				MSS SP 95, MOC Same as pipe												
Flange																	
Size(in)	0.5	0.75	1	1.5	2	3	4	6	8	10	12	14	16	18	20	22	24
TYPE	SW				WN												
MOC	ASTM A 182 F 316 L				ASTM A 182 F 316 L												
FACE	RTJ-Note 8				RTJ-Note 8												
STD.	ASME B 16.5				B 16.5, But welding ends as per B 16.25												
Spectacle Blind/Spacer Blinds																	
Size(in)	0.5	0.75	1	1.5	2	3	4	6	8	10	12	14	16	18	20	22	24
MOC	ASTM A 182 F 316 L																
Spectacle	ASME B 16.48																
Mechanical Joints																	
Stud Bolt	ASTM A 193 Gr. B7M																
Hex Nuts	ASTM A 194 Gr. 2HM																
Gasket	ASME B 16.20,OCT ring of SS316 with Max. Hardness of 120 BHN																

Pressure-Temperature Rating				Maximum Hydrostatic Pressure	
Temp.,Deg F	Pressure, PSI	Temp,Deg C	Pressure, Kg/cm2	Pressure, psig	Pres.,Kg/cm2g
- 20/100	1799.96	-28.8/38	126.55	2700 psig	189.83
200	1534.98	93	107.92	Limited by Flange considereing flange as the weakest joint in piping system	

Notes Releted to Pipe,Fittings,Flanges,Gasket and Stud Bolts -Nuts

1. Welded fittings shall be 100% radiographed.
2. All alloy steel stud bolts and nuts shall be hot dip galvanized or electrogalvanized with minimum coating as per spec.
3. Spectacle blinds and spacer sizes and rating that are not available in ASME B 16.48 shall be as per manufacturer standard. Design shall be submitted to company for approval.
4. All pipe thread shall be as per ASME B 1.20.1
5. PMS to be read in conjuction with FS 2004 A.
6. Contractor use Schedule 80 for sizes less than 1/1/2" for threaded pipe and fittings.
7. Minimum sizes shall be 0.75 inch for piping other than air,instrument water and manufacturer's standard piping.
8. RTJ groove hardness shall be 140 BHN

Offshore Design Section Engineering Services IS0-9001:2000	PIPING MATERIAL SPECIFICATION				Sheet No.	2 of 2	
	Piping Class		Material	C.A	Spec.No	Revision:0	
	E 10	# 900	SS 316 L	1.5mm	2004A,Rev 9	Page No.	68
	Design Code: ASME B 31.3 and other applicable Code NACE-MR-01-75/ISO-15156-1/2/3						
	Service:	Corrosive HydroCarbon Service-Sour Liquid and Vapour.					
	0						

Branch Table as per API RP 14E

Run Pipe \ Branch Pipe	≤ 1	1-1.5	2	3	4	6	8	10	12	14	16	18	20	24	30
≤ 1	T														
1-1.5	T	T													
2	*	*	T												
3	*	*	T	T											
4	*	*	T	T	T										
6	*	*	W	T	T	T									
8	*	*	W	W	T	T	T								
10	*	*	W	W	W	T	T	T							
12	*	*	W	W	W	T	T	T	T						
14	*	*	W	W	W	W	T	T	T	T					
16	*	*	W	W	W	W	T	T	T	T	T				
18	*	*	W	W	W	W	W	T	T	T	T	T			
20	*	*	W	W	W	W	W	T	T	T	T	T	T		
24	*	*	W	W	W	W	W	W	T	T	T	T	T	T	
30	*	*	W	W	W	W	W	W	W	W	T	T	T	T	T

LEGEND	
*	Sockolet
W	Weldolet
T	TEE

Valve Data

Size(in)	0.5	0.75	1	1.5	2	3	4	6	8	10	12	14	16	18	20	22	24
Gate Valve																	
TAG	VB-131				VB-251												
Rating	# 1500, SW				# 900, RF												
Plug Valve																	
TAG																	
Rating																	
Ball Valve																	
TAG	Use Gate Valve				VB-258												
Rating	# 1500, SW				# 900, RTJ FLGD												
Globe Valve																	
TAG	VGL - 132				VGL - 254												
Rating	# 1500, SW				# 900, RTJ, FLGD												
Check Valve																	
TAG	VC - 132, Lift Check				VC - 255, Swing Check												
Rating	# 1500, SW				# 900, RTJ, FLGD												
Needle Valve																	
TAG	VN-112																
Rating	# 1500, SW																
Butter Fly Valve																	
TAG																	
Rating																	

Notes Releted to Valve and Brach Connection

1. PMS to be read in conjuction with FS 2004 A.

Revision:0	15.01.16	Issued For Bid	PS	AKM	SJ
Revision	Date	Description	Prepared By	Reviewed By	Approved By

	Offshore Design Section Engineering Services IS0-9001:2000				**PIPING MATERIAL SPECIFICATION**									Sheet No.		**1 of 2**	
					Piping Class			Material		C.A		Spec.No				Revision:0	
					F 10		# 1500	SS 316 L		1.5mm		2004A,Rev 9				Page No.	69
					Design Code: ASME B 31.3 and other applicable Code NACE-MR-01-75/ISO-15156-1/2/3												
					Service:	Corrosive HydroCarbon Service-Sour Liquid and Vapour.											

Pipe Data	ASME B 36.19																
Size(in)	0.5	0.75	1	1.5	2	3	4	6	8	10	12	14	16	18	20	22	24
O.D.mm	21.3	26.7	33.4	48.3	60.3	88.9	114.3	168.3	219.1	273.1	323.9	355.6	406.4	457.2	508	558.8	609.6
Sch.	XXS	XXS	XXS	XXS	160	160	160	160	160								
WTmm	7.47	7.8	9.1	10.16	8.74	11.1	13.49	18.26	23								
M.T (%)	12.5	12.5	12.5	12.5	12.5	12.5	12.5	12.5	12.5								
TYPE	Seamless																
MOC	ASTM A 312 TP 316L																
Ends	PE				BE												
Fittings Data																	
Size(in)	0.5	0.75	1	1.5	2	3	4	6	8	10	12	14	16	18	20	22	24
TYPE	SW				Butt Weld												
Rating	# 9000				160	160	160	160	160								
MOC	ASTM A 182 F 316L U.N.O				ASTM A 403 Gr. WP 316L , Seamless												
Elbow	ASMEB16.11				ASME B 16.9												
Tee	ASMEB16.11				ASME B 16.9												
Red.	ASMEB16.11				ASME B 16.9												
Cap	ASMEB16.11				ASME B 16.9												
Coupl	ASMEB16.11				ASME B 16.9												
Plug	ASMEB16.11				ASME B 16.9												
Union																	
Elbowlet	MSS SP 97				MSS SP 97,ASTM A 182 F 316L												
Sockolet	MSS SP 97				MSS SP 97,ASTM A 182 F 316L												
Weldolet	MSS SP 97				MSS SP 97,ASTM A 182 F 316L												
Nipple	MSS SP 97,Same as pipe				MOC Same as pipe												
Swage	MSS SP 95,Same as pipe				MSS SP 95, MOC Same as pipe												
Flange																	
Size(in)	0.5	0.75	1	1.5	2	3	4	6	8	10	12	14	16	18	20	22	24
TYPE	SW				WN												
MOC	ASTM A 182 F 316 L				ASTM A 182 F 316 L												
FACE	RTJ-Note 8				RTJ-Note 8												
STD.	ASME B 16.5				B 16.5, But welding ends as per B 16.25												
Spectacle Blind/Spacer Blinds																	
Size(in)	0.5	0.75	1	1.5	2	3	4	6	8	10	12	14	16	18	20	22	24
MOC	ASTM A 182 F 316 L																
Spectacle	ASME B 16.48																
Mechanical Joints																	
Stud Bolt	ASTM A 193 Gr. B7M																
Hex Nuts	ASTM A 194 Gr. 2HM																
Gasket	ASME B 16.20,OCT ring of SS316 with Max. Hardness of 120 BHN																

Pressure-Temperature Rating				Maximum Hydrostatic Pressure	
Temp.,Deg F	Pressure, PSI	Temp,Deg C	Pressure, Kg/cm2	Pressure, psig	Pres.,Kg/cm2g
- 20/100	2999.7	-28.8/38	210.9	4499.5 psig	316.35
122	2901.6	50	204	Limited by Flange considereing flange as the weakest joint in piping system	

Notes Releted to Pipe,Fittings,Flanges,Gasket and Stud Bolts -Nuts

1. Welded fittings shall be 100% radiographed.
2. All alloy steel stud bolts and nuts shall be hot dip galvanized or electrogalvanized with minimum coating as per spec.
3. Spectacle blinds and spacer sizes and rating that are not available in ASME B 16.48 shall be as per manufacturer standard. Design shall be submitted to company for approval.
4. All pipe thread shall be as per ASME B 1.20.1
5. PMS to be read in conjuction with FS 2004 A.
6. Contractor use Schedule 80 for sizes less than 1/1/2" for threaded pipe and fittings.
7. Minimum sizes shall be 0.75 inch for piping other than air,instrument water and manufacturer's standard piping.
8. RTJ groove hardness shall be 140 BHN

Offshore Design Section Engineering Services IS0-9001:2000	PIPING MATERIAL SPECIFICATION				Sheet No.	2 of 2	
	Piping Class		Material	C.A	Spec.No	Revision:0	
	F 10	# 1500	SS 316 L	1.5mm	2004A,Rev 9	Page No.	70
	Design Code: ASME B 31.3 and other applicable Code NACE-MR-01-75/ISO-15156-1/2/3						
	Service:	Corrosive HydroCarbon Service-Sour Liquid and Vapour.					
	0						

Branch Table as per API RP 14E

Run Pipe \ Branch Pipe	≤ 1	1-1.5	2	3	4	6	8	10	12	14	16	18	20	24	30
≤ 1	T														
1-1.5	T	T													
2	*	*	T												
3	*	*	T	T											
4	*	*	T	T	T										
6	*	*	W	T	T	T									
8	*	*	W	W	T	T	T								
10	*	*	W	W	W	T	T	T							
12	*	*	W	W	W	T	T	T	T						
14	*	*	W	W	W	W	T	T	T	T					
16	*	*	W	W	W	W	T	T	T	T	T				
18	*	*	W	W	W	W	W	T	T	T	T	T			
20	*	*	W	W	W	W	W	T	T	T	T	T	T		
24	*	*	W	W	W	W	W	W	T	T	T	T	T	T	
30	*	*	W	W	W	W	W	W	W	W	T	T	T	T	T

LEGEND	
*	Sockolet
W	Weldolet
T	TEE

Valve Data

Size(in)	0.5	0.75	1	1.5	2	3	4	6	8	10	12	14	16	18	20	22	24
Gate Valve																	
TAG	VB-231				VB-351												
Rating	# 2500, SW				# 2500, RF												
Plug Valve																	
TAG																	
Rating																	
Ball Valve																	
TAG	Use Gate Valve				VB-358												
Rating	# 2500, SW				# 2500, RTJ FLGD												
Globe Valve																	
TAG	VGL - 232				VGL - 354												
Rating	# 2500, SW				# 2500, RTJ, FLGD												
Check Valve																	
TAG	VC - 232, Lift Check				VC - 355, Swing Check												
Rating	# 2500, SW				# 2500, RTJ, FLGD												
Needle Valve																	
TAG	VN-212																
Rating	# 2500, SW																
Butter Fly Valve																	
TAG																	
Rating																	

Notes Releted to Valve and Brach Connection

1. PMS to be read in conjuction with FS 2004 A.

Revision	Date	Description	Prepared By	Reviewed By	Approved By
Revision:0	15.01.16	Issued For Bid	PS	AKM	SJ

	Offshore Design Section Engineering Services IS0-9001:2000								**PIPING MATERIAL SPECIFICATION**					Sheet No.		**1 of 2**	
									Piping Class		Material	C.A	Spec.No			Revision : 1	
									A12	# 150	Titanium	Nil	2004A,Rev 9			Page No.	71
									Design Code:		**ASME B 31.3**						
									Service:	Chemical (Ferric Chloride),Coagulant							
Pipe Data	ASME B 36.19 (BS-1600)																
Size(in)	0.5	0.75	1	1.5	2	3	4	6	8	10	12	14	16	18	20	22	24
O.D.mm	21.3	26.7	33.4	48.3	60.3	88.9	114.3	168.3									
Sch.	40	40	40	40	40	40	10	10									
WTmm	2.77	2.87	3.88	3.68	3.91	5.49	3.05	3.4									
M.T (%)	12.5	12.5	12.5	12.5	12.5	12.5	12.5	12.5									
TYPE	Seamless																
MOC	ASTM B 861 Gr. 2																
Ends	BE																
Fittings Data																	
Size(in)	0.5	0.75	1	1.5	2	3	4	6	8	10	12	14	16	18	20	22	24
TYPE	Butt Welded																
Rating	2.77	2.87	3.88	3.68	3.91	5.49	3.05	3.4									
MOC	ASTM B 363 Gr. WPT 2																
Elbow	ASME B 16.9 and ASME B 16.28 for short radius elbow and returns																
Tee	ASME B 16.9																
Red.	ASME B 16.9																
Cap	ASME B 16.9																
Coupl	ASME B 16.9																
Plug	ASME B 16.9																
Union																	
Elbowlet	ASME B 16.9																
Sockolet																	
Weldolet	MSS SP 97																
Nipple	MOC Same as pipe																
Swage	MSS SP95, MOC Same as pipe																
Flange																	
Size(in)	0.5	0.75	1	1.5	2	3	4	6	8	10	12	14	16	18	20	22	24
TYPE	Lap Joint Flange / WN Flange																
MOC	LJ=Innner Flange-B 363 WPT2, Outer Flange A 105 and WN= B 381 Gr. F2																
FACE	RF																
STD.	ASME B 16.5																
Blind Flange																	
Size(in)	0.5	0.75	1	1.5	2	3	4	6	8	10	12	14	16	18	20	22	24
MOC	ASTM B 381 Gr. F 2 as per ASME B 16.5																
Mechanical Joints																	
Stud Bolts	ASTM A 193 Gr. B7 to be used with insulating gasket																
Hex Nuts	ASTM A 194 Gr. 2H to be used with insulating gasket																
Gasket	ASME B 16.21,Flat Ring,1.58mm,CNAF																

Pressure-Temperature Rating				Maximum Hydrostatic Pressure	
Temp.,Deg F	Pressure, PSI	Temp,Deg C	Pressure, Kg/cm2	Pressure, psig	Pres.,Kg/cm2g
347	199	175	14	300 psig	21 Kg/cm2
				Limited by Flange considereing flange as the weakest joint in piping system	

Notes Releted to Pipe,Fittings,Flanges,Gasket and Stud Bolts -Nuts

1. Pulled cold worked bend shall not be used.
2.All alloy steel stud bolts and nuts shall be hot dip galvanized or electrogalvanized with minimum coating as per spec.
3. PMS to be read in conjuction with FS 2004 A.
4. All flanges are to be epoxy coated for corrosion protection.

Offshore Design Section Engineering Services IS0-9001:2000	**PIPING MATERIAL SPECIFICATION**				Sheet No.	**2 of 2**	
	Piping Class		Material	C.A	Spec.No	Revision : 1	
	A12	# 150	Titanium	Nil	2004A,Rev 9	Page No.	72
	Design Code:		**ASME B 31.3**				
	Service:	Chemical (Ferric Chloride),Coagulant					
	0						

Branch Table as per API RP 14E

Run Pipe \ Branch Pipe	≤ 1	1-1.5	2	3	4	6
≤ 1	T					
1-1.5	T	T				
2	T	T	T			
3	W	W	T	T		
4	W	W	T	T	T	
6	W	W	W	T	T	T

LEGEND	
*	Sockolet
W	Weldolet
T	TEE

Valve Data

Size(in)	0.5	0.75	1	1.5	2	3	4	6	8	10	12	14	16	18	20	22	24
Gate Valve																	
TAG																	
Rating																	
Plug Valve																	
TAG																	
Rating																	
Ball Valve																	
TAG					VB-99												
Rating					# 150, RF												
Globe Valve																	
TAG					VGL-99												
Rating					# 150, RF												
Check Valve																	
TAG					VC-99												
Rating					# 150, RF												
Needle Valve																	
TAG					VN-111												
Rating																	
Butter Fly Valve																	
TAG					VN-111												
Rating																	

Notes Releted to Valve and Brach Connection

1. Valve body and seat test pressure shall be as per BS-5146.
2. PMS to be read in conjuction with FS 2004 A.

Revision	Date	Description	Prepared By	Reviewed By	Approved By
Revision : 1	15.01.16	Issued For Bid	PS	AKM	SJ

	Offshore Design Section Engineering Services IS0-9001:2000	**PIPING MATERIAL SPECIFICATION**												Sheet No.		**1 of 2**	
		Piping Class							Material			C.A	Spec.No			Revision: 1	
		A 13				# 150			Copper			Nil	2004A,Rev 9			Page No.	73
		Design Code:							**ASME B 31.3**								
		Service:							Potable Water - Hot and Cold								
Pipe Data	ASME B 36.19 (BS-1600)																
Size(in)	0.5	0.75	1	1.5	2	3	4	6	8	10	12	14	16	18	20	22	24
O.D.mm	21.3	26.7	33.4	48.3	60.3	88.9	114.3										
Sch.																	
WTmm	2.72	2.9	3.2	3.81	3.96	5.56	6.35										
M.T (%)																	
TYPE	Seamles Hard Drawn H 80(Regular)				Seamless light Drawn H55(Regular)												
MOC	ASTM B 42 UNS C1 2200				ASTM B 42 UNS C1 2200												
Ends	BE																
Fittings Data																	
Size(in)	0.5	0.75	1	1.5	2	3	4	6	8	10	12	14	16	18	20	22	24
TYPE	Brazed Fittings					Butt Welded											
Rating	2.72	2.9	3.2	3.81	3.96	5.56	6.35										
MOC	ASTM B 124 UNS C1 1000					ASTM B 42 UNS C1 2200											
Elbow																	
Tee																	
Red.																	
Cap																	
Coupl																	
Plug																	
Union																	
Elbowlet																	
Sockolet																	
Weldolet																	
Nipple																	
Swage																	
Flange																	
Size(in)	0.5	0.75	1	1.5	2	3	4	6	8	10	12	14	16	18	20	22	24
TYPE	Slip on composite					WN Composite											
MOC	Innner Flange B 61, Outer Flange A 105(Galv.Epoxy coated)																
FACE	FF																
STD.	ISO-7005-3																
Blind Flange																	
Size(in)	0.5	0.75	1	1.5	2	3	4	6	8	10	12	14	16	18	20	22	24
MOC	ASTM A 105 With 3mm copper over lay																
Mechanical Joints																	
Stud Bolts	ASTM A 193 Gr. B7 to be used with insulating gasket																
Hex Nuts	ASTM A 194 Gr. 2H to be used with insulating gasket																
Gasket	ASME B 16.21,Flat Ring,2mm,CNAF																

Pressure-Temperature Rating				Maximum Hydrostatic Pressure	
Temp.,Deg F	Pressure, PSI	Temp,Deg C	Pressure, Kg/cm2	Pressure, psig	Pres.,Kg/cm2g
194	227	90	16	340	24 Kg/cm2
				Limited by Flange considereing flange as the weakest joint in piping system	

Notes Releted to Pipe,Fittings,Flanges,Gasket and Stud Bolts -Nuts

1. Threading on piping is not allowed. Only screwed fittings shall be used for vents and drains.
2.All alloy steel stud bolts and nuts shall be hot dip galvanized or electrogalvanized with minimum coating as per spec.
3. PMS to be read in conjuction with FS 2004 A.
4. Whereever there is connection between CS and copper,scrificial spool and electrical isolation kit i.e. insulating gaskets shall be used.
5. For flanged valves FF valves are to be used for sizes 2" and above. FF solid slip on # 150 flanges conforming to ASTM B 124 shall be used.

Offshore Design Section Engineering Services IS0-9001:2000	**PIPING MATERIAL SPECIFICATION**				Sheet No.	**2 of 2**	
	Piping Class		Material	C.A	Spec.No	Revision: 1	
	A 13	# 150	Copper	Nil	2004A,Rev 9	Page No.	74
	Design Code:		**ASME B 31.3**				
	Service:	Potable Water - Hot and Cold					
	0						

Branch Table as per API RP 14E

Run Pipe \ Branch Pipe	≤ 1	1-1.5	2	3	4
≤ 1	T				
1-1.5	T	T			
2	*	T	T		
3	*	*	T	T	
4	*	*	T	T	T

LEGEND	
*	Sockolet
W	Weldolet
T	TEE

Valve Data

Size(in)	0.5	0.75	1	1.5	2	3	4	6	8	10	12	14	16	18	20	22	24
Gate Valve																	
TAG	VG - 50				VG 80												
Rating	230 PSI CWP				# 150												
Plug Valve																	
TAG																	
Rating																	
Ball Valve																	
TAG	VB 50				VB 86												
Rating	230 PSI CWP				# 150												
Globe Valve																	
TAG	VGL 59				VGL 80												
Rating	230 PSI CWP				# 150												
Check Valve																	
TAG	VC 50				VC 80												
Rating	230 PSI CWP				# 150												
Needle Valve																	
TAG	VN 11																
Rating	230 PSI CWP																
Butter Fly Valve																	
TAG																	
Rating																	

Notes Releted to Valve and Brach Connection

1. PMS to be read in conjuction with FS 2004 A.

Revision	Date	Description	Prepared By	Reviewed By	Approved By
Revision: 1	15.01.16	Issued For Bid	PS	AKM	SJ

Offshore Design Section Engineering Services IS0-9001:2000	PIPING MATERIAL SPECIFICATION				Sheet No.	1 of 2
	Piping Class	Material	C.A	Spec.No	Revision : 0	
	A1LN	# 150	LTCS-NACE	3mm	2004A,Rev 9	Page No. 75
	Design Code:	**ASME B 31.3 and other applicable Code NACE-MR-01-75/ISO-15156-1/2/3**				
	Service:	Corrosive HydroCarbon Service-Sour Liquid and Vapour (Low temperature).				

Pipe Data	ASME B 36.10																
Size(in)	0.5	0.75	1	1.5	2	3	4	6	8	10	12	14	16	18	20	22	24
O.D.mm	21.3	26.7	33.4	48.3	60.3	88.9	114.3	168.3	219.1	273.1	323.9	355.6	406.4	457.2	508	558.8	609.6
Sch.	XXS	160	160	160	80	80	80	80	Std.	Std.	Std.	Std.	Std.				
WTmm	7.47	5.56	6.35	7.14	5.54	7.62	8.56	10.97	8.18	9.27	9.52	9.52	9.52				
M.T (%)	12.5	12.5	11.0	12.5	12.5	12.5	12.5	12.5	12.5	12.5	12.5	12.5	12.5				
TYPE	Seamless																
MOC	ASTM A 333 Gr.6																
Ends	PE				BE												

Fittings Data																	
Size(in)	0.5	0.75	1	1.5	2	3	4	6	8	10	12	14	16	18	20	22	24
TYPE	Socket Weld				Butt Weld												
Rating	# 9000	# 6000			80	80	80	80	Std.	Std.	Std.	Std.	Std.				
MOC	ASTM A 350 Gr. LF2 U.N.O				ASTM A 420 Gr. WPL6, Seamless U.N.O												
Elbow	ASMEB16.11				ASME B 16.9									ASME B 16.9			
Tee	ASMEB16.11				ASME B 16.9									ASME B 16.9			
Red.	ASMEB16.11				ASME B 16.9									ASME B 16.9			
Cap	ASMEB16.11				ASME B 16.9									ASME B 16.9			
Coupl	ASMEB16.11				ASME B 16.9									ASME B 16.9			
Plug	ASMEB16.11				ASME B 16.9									ASME B 16.9			
Union																	
Elbowlet	MSS SP 97,ASTM A 350 Gr. LF2				MSS SP 97,ASTM A 350 Gr. LF2									MSS SP 97,ASTM A 350 Gr. LF2			
Sockolet	MSS SP 97,ASTM A 350 Gr. LF2				MSS SP 97,ASTM A 350 Gr. LF2									MSS SP 97,ASTM A 350 Gr. LF2			
Weldolet	MSS SP 97,ASTM A 350 Gr. LF2				MSS SP 97,ASTM A 350 Gr. LF2									MSS SP 97,ASTM A 350 Gr. LF2			
Nipple	MSS SP 97,Same as pipe				MOC Same as pipe									MOC Same as pipe			
Swage	MSS SP 95,Same as pipe				MSS SP 95,MOC Same as pipe									MSS SP 95,MOC Same as pipe			

Flange																	
Size(in)	0.5	0.75	1	1.5	2	3	4	6	8	10	12	14	16	18	20	22	24
TYPE	SW				WN												
MOC	ASTM A 350 Gr. LF2				ASTM A 350 Gr. LF2												
FACE	RF-Serrated Finished				RF, Serrated Finished												
STD.	ASME B 16.5				ASME B 16.5, But welding ends as per ASME B 16.25												

Spectacle Blind/Spacer Blinds																	
Size(in)	0.5	0.75	1	1.5	2	3	4	6	8	10	12	14	16	18	20	22	24
MOC	ASTM A 350 Gr. LF2																
Spectacle	ASME B 16.48				ASME B 16.48							Spacer and blind as per ASME B 16.48					

Mechanical Joints		
Stud Bolts	ASTM A 320 Gr. L7	ASTM A 320 Gr. L7
Hex Nuts	ASTM A 194 Gr. 4	ASTM A 194 Gr.4
Gasket	ASME B 16.21,Flat Ring,1.58mm,CNAF	ASME B 16.21,Flat Ring,1.58mm,CNAF

Pressure-Temperature Rating				Maximum Hydrostatic Pressure	
Temp.,Deg F	Pressure, PSI	Temp,Deg C	Pressure, Kg/cm2	Pressure, psig	Pres.,Kg/cm2g
(-) 50 to 100	285	(-) 45 to 38	20	450 psig	31.6 Kg/cm2
200	260	93	18.3	Limited by Flange considereing flange as the weakest joint in piping system	
300	230	149	16.2		

Notes Releted to Pipe,Fittings,Flanges,Gasket and Stud Bolts -Nuts

1. Welded fittings shall be 100% radiographed.
2.All alloy steel stud bolts and nuts shall be hot dip galvanized or electrogalvanized with minimum coating as per spec.
3. Spectacle blinds and spacer sizes and rating that are not available in ASME B 16.48 shall be as per manufacturer standard. Design shall be submitted to company for review and approval.
4. All pipe thread shall be as per ASME B 1.20.1
5. PMS to be read in conjuction with FS 2004 A and all the requirement of MR-01-75/ISO-15156-1/2/3 to complied.
6. Two jackscrew, 180 degree apart shall be provided in one of the flanges for all orifice flange and specified spectacle blinds.
7. In instrument gas lines - Use this specification for main Header and SS316L piping for Sub Header. Presssure-temperature rating of SS316L shall compatible to this piping class and both shall comply all the requirement of MR-01-75/ISO-15156-1/2/3

Offshore Design Section Engineering Services IS0-9001:2000	PIPING MATERIAL SPECIFICATION				Sheet No.	2 of 2
	Piping Class	Material	C.A	Spec.No	Revision : 0	
	A1LN # 150	LTCS-NACE	3mm	2004A,Rev 9	Page No.	76
	Design Code: ASME B 31.3 and other applicable Code NACE-MR-01-75/ISO-15156-1/2/3					
	Service:	Corrosive HydroCarbon Service-Sour Liquid and Vapour (Low temperature).				
	0					

Branch Table as per API RP 14E

Run Pipe \ Branch Pipe	≤ 1	1-1.5	2	3	4	6	8	10	12	14	16	18	20	24	30
≤ 1	T														
1-1.5	T	T													
2	*	*	T												
3	*	*	T	T											
4	*	*	T	T	T										
6	*	*	W	T	T	T									
8	*	*	W	W	T	T	T								
10	*	*	W	W	W	T	T	T							
12	*	*	W	W	W	T	T	T	T						
14	*	*	W	W	W	W	T	T	T	T					
16	*	*	W	W	W	W	T	T	T	T	T				
18	*	*	W	W	W	W	W	T	T	T	T	T			
20	*	*	W	W	W	W	W	T	T	T	T	T	T		
24	*	*	W	W	W	W	W	W	T	T	T	T	T	T	
30	*	*	W	W	W	W	W	W	W	W	T	T	T	T	T

LEGEND	
*	Sockolet
W	Weldolet
T	TEE

Valve Data

Size(in)	0.5	0.75	1	1.5	2	3	4	6	8	10	12	14	16	18	20	22	24
Gate Valve																	
TAG	VG 45N,SW				VG 65N,FLANGED												
Rating	# 800				# 150,RF												
Plug Valve																	
TAG																	
Rating																	
Ball Valve																	
TAG	VB 45N,SW and VB 107N,SW (Note-5)				VB 65N, Lever Operated							VB **, Gear Operated					
Rating	# 800				# 150, RF												
Globe Valve																	
TAG	VGL 45N,SW				VGL 65N												
Rating	# 800				# 150, RF												
Check Valve																	
TAG	VC 45N,SW,Lift Check				VC 65N,Swing Check/ VC 82N (Wafer Check, Note -1)												
Rating	# 800				# 150, RF												
Needle Valve																	
TAG	VN 9N,SW																
Rating	# 800																
Butter Fly Valve																	
TAG																	
Rating																	

Notes Releted to Valve and Brach Connection

1. Wafer check valve to be avoided as far as possible; unless the avaliable space constraint does not allow normal check valve . The contractor to take approvel for use of wafer check Valve during pipe routing after extablishing the space constraint.
2. Wafer type Butter Fly Valve may be used only in fire water(Clean water) service.
3. PMS to be read in conjuction with FS 2004 A.
4. Maximum temperature limit for all Ball Valve shall be 121 Degree C
5. In instrument gas lines - Use VB -45 for main Header and VB-107 for Sub Header. The MOC of VB-107 shall be SS-316L as per VMS and comply all the requirement of MR-01-75/ISO-15156-1/2/3

Revision	Date	Description	Prepared By	Reviewed By	Approved By
Revision : 0	22/7/2009	Issued For Bid	PS	GJ	GRP

	Offshore Design Section Engineering Services IS0-9001:2000				**PIPING MATERIAL SPECIFICATION**									Sheet No.		**1 of 2**	
					Piping Class				Material			C.A	Spec.No			Revision: 0	
					A 22		# 150		SS 316 L			Nil	2004A,Rev 9			Page No.	77
					Design Code:				**ASME B 31.3**								
					Service:				Chemical								
Pipe Data	ASME B 36.19																
Size(in)	0.5	0.75	1	1.5	2	3	4	6	8	10	12	14	16	18	20	22	24
O.D.mm	21.3	26.7	33.4	48.3	60.3	88.9	114.3	168.3	219.1	273.1	323.9	355.6	406.4	457.2	508	558.8	609.6
Sch.	40s	40s	40s	40s	10s	10s	10s	10s									
WTmm	2.77	2.87	3.38	3.68	2.77	3.05	3.05	3.4									
M.T (%)	12.5	12.5	12.5	12.5	12.5	12.5	12.5	12.5									
TYPE	Seamless																
MOC	ASTM A 312 TP 316L																
Ends	PE				BE												
Fittings Data																	
Size(in)	0.5	0.75	1	1.5	2	3	4	6	8	10	12	14	16	18	20	22	24
TYPE	PE				Butt Weld												
Rating	# 3000				10s	10s	10s	10s									
MOC	ASTM A 182 F 316L U.N.O				ASTM A 403 Gr. WP 316L , Seamless												
Elbow	ASMEB16.11				ASME B 16.9												
Tee	ASMEB16.11				ASME B 16.9												
Red.	ASMEB16.11				ASME B 16.9												
Cap	ASMEB16.11				ASME B 16.9												
Coupl	ASMEB16.11				ASME B 16.9												
Plug	ASMEB16.11				ASME B 16.9												
Union																	
Elbowlet	MSS SP 97				MSS SP 97,ASTM A 182 F 316L												
Sockolet	MSS SP 97				MSS SP 97,ASTM A 182 F 316L												
Weldolet	MSS SP 97				MSS SP 97,ASTM A 182 F 316L												
Nipple	MSS SP 97,Same as pipe				MOC Same as pipe												
Swage	MSS SP 95,Same as pipe				MSS SP 95,MOC Same as pipe												
Flange																	
Size(in)	0.5	0.75	1	1.5	2	3	4	6	8	10	12	14	16	18	20	22	24
TYPE	SW				Lap Joint (LJ)												
MOC	ASTM A 182 F 316 L				Stub end A 182 F316L + ASTM A 105 Backing flange (While connecting to FF flange use Slip -on(SO),FF, F 316L flange												
FACE	RF-Serrated Finished				RF, Serrated Finished												
STD.	ASME B 16.5				B 16.5, But welding ends as per B 16.25												
Spectacle Blind/Spacer Blinds																	
Size(in)	0.5	0.75	1	1.5	2	3	4	6	8	10	12	14	16	18	20	22	24
MOC	ASTM A 182 F 316 L																
Spectacle	ASME B 16.48																
Mechanical Joints																	
Stud Bolts	ASTM A 193 Gr. B7																
Hex Nuts	ASTM A 194 Gr. 2H																
Gasket	ASME B 16.20,5mm, SS Spiral wound with CNAF filler																

Pressure-Temperature Rating				Maximum Hydrostatic Pressure	
Temp.,Deg F	Pressure, PSI	Temp,Deg C	Pressure, Kg/cm2	Pressure, psig	Pres.,Kg/cm2g
60/100	230	16/38	16.17	350 psig	25 Kg/cm2
200	195	93	13.7	Limited by Flange considereing flange as the weakest joint in piping system	
300	160	149	12.3		
400	145	204	11.25		
500	65	260	10.2		

Notes Releted to Pipe,Fittings,Flanges,Gasket and Stud Bolts -Nuts

1. Welded fittings shall be 100% radiographed.
2.All alloy steel stud bolts and nuts shall be hot dip galvanized or electrogalvanized with minimum coating as per spec.
3. Spectacle blinds and spacer sizes and rating that are not available in ASME B 16.48 shall be as per manufacturer standard. Design shall be submitted to company for approval.
4. All pipe thread shall be as per ASME B 1.20.1
5. PMS to be read in conjuction with FS 2004 A.
6. Contractor use Schedule 80 for sizes less than 1/1/2" for threaded pipe and fittings.
7. Minimum sizes shall be 0.75 inch for piping other than air,instrument water and manufacturer's standard piping.

Offshore Design Section Engineering Services IS0-9001:2000	**PIPING MATERIAL SPECIFICATION**				Sheet No.	**2 of 2**
	Piping Class		Material	C.A	Spec.No	Revision: 0
	A 22	# 150	SS 316 L	Nil	2004A,Rev 9	Page No. 78
	Design Code:		**ASME B 31.3**			
	Service:		Chemical			
	0					

Branch Table as per API RP 14E

Run Pipe \ Branch Pipe	≤ 1	1-1.5	2	3	4	6	8	10	12	14	16	18	20	24	30
≤ 1	T														
1-1.5	T	T													
2	*	*	T												
3	*	*	T	T											
4	*	*	T	T	T										
6	*	*	W	T	T	T									
8	*	*	W	W	T	T	T								
10	*	*	W	W	W	T	T	T							
12	*	*	W	W	W	T	T	T	T						
14	*	*	W	W	W	W	T	T	T	T					
16	*	*	W	W	W	W	T	T	T	T	T				
18	*	*	W	W	W	W	W	T	T	T	T	T			
20	*	*	W	W	W	W	W	T	T	T	T	T	T		
24	*	*	W	W	W	W	W	W	T	T	T	T	T	T	
30	*	*	W	W	W	W	W	W	W	W	T	T	T	T	T

LEGEND	
*	Sockolet
W	Weldolet
T	TEE

Valve Data

Size(in)	0.5	0.75	1	1.5	2	3	4	6	8	10	12	14	16	18	20	22	24
Gate Valve																	
TAG	VB-131				VB-151												
Rating	# 800, SW				# 150, RF												
Plug Valve																	
TAG																	
Rating																	
Ball Valve																	
TAG	VB-131				VB-151												
Rating	# 800, SW				# 150, RF												
Globe Valve																	
TAG	VGL - 131				VGL - 151												
Rating	# 800, SW				# 150, RF												
Check Valve																	
TAG	VC - 131, Lift Check				VC - 151, Swing Check												
Rating	# 800, SW				# 150, RF												
Needle Valve																	
TAG	VN-111																
Rating	# 800, SW																
Butter Fly Valve																	
TAG																	
Rating																	

Notes Releted to Valve and Brach Connection

1. PMS to be read in conjuction with FS 2004 A.

Revision	Date	Description	Prepared By	Reviewed By	Approved By
Revision: 0	04-08-2008	Issued For Bid	PS	GJ	GRP

Offshore Design Section Engineering Services IS0-9001:2000	PIPING MATERIAL SPECIFICATION				Sheet No.	1 of 2
	Piping Class	Material	C.A	Spec.No	Revision: 1	
	B 22	# 300	SS 316 L	Nil	2004A,Rev 9	Page No. 79
	Design Code:		**ASME B 31.3**			
	Service:	Chemical				

Pipe Data	ASME B 36.19																
Size(in)	0.5	0.75	1	1.5	2	3	4	6	8	10	12	14	16	18	20	22	24
O.D.mm	21.3	26.7	33.4	48.3	60.3	88.9	114.3	168.3	219.1	273.1	323.9	355.6	406.4	457.2	508	558.8	609.6
Sch.	40s	40s	40s	40s	10s	10s	10s	40s									
WTmm	2.77	2.87	3.38	3.68	2.77	3.05	3.05	7.11									
M.T (%)	12.5	12.5	12.5	12.5	12.5	12.5	12.5	12.5									
TYPE	Seamless																
MOC	ASTM A 312 TP 316L																
Ends	PE				BE												
Fittings Data																	
Size(in)	0.5	0.75	1	1.5	2	3	4	6	8	10	12	14	16	18	20	22	24
TYPE	SW				Butt Weld												
Rating	# 3000				10s	10s	10s	40s									
MOC	ASTM A 182 F 316L U.N.O				ASTM A 403 Gr. WP 316L , Seamless												
Elbow	ASMEB16.11				ASME B 16.9												
Tee	ASMEB16.11				ASME B 16.9												
Red.	ASMEB16.11				ASME B 16.9												
Cap	ASMEB16.11				ASME B 16.9												
Coupl	ASMEB16.11				ASME B 16.9												
Plug	ASMEB16.11				ASME B 16.9												
Union																	
Elbowlet	MSS SP 97				MSS SP 97,ASTM A 182 F 316L												
Sockolet	MSS SP 97				MSS SP 97,ASTM A 182 F 316L												
Weldolet	MSS SP 97				MSS SP 97,ASTM A 182 F 316L												
Nipple	MSS SP 97,Same as pipe				MOC Same as pipe												
Swage	MSS SP 95,Same as pipe				MSS SP 95,MOC Same as pipe												
Flange																	
Size(in)	0.5	0.75	1	1.5	2	3	4	6	8	10	12	14	16	18	20	22	24
TYPE	SW				Lap Joint (LJ)												
MOC	ASTM A 182 F 316 L				Stub end A182 F 316L + ASTM A 105 Backing flange (While connecting to FF flange use Slip -on(SO),FF, F 316L flange												
FACE	RF-Smooth Finished				RF, Smooth Finished												
STD.	ASME B 16.5				B 16.5, But welding ends as per B 16.25												
Spectacle Blind/Spacer Blinds																	
Size(in)	0.5	0.75	1	1.5	2	3	4	6	8	10	12	14	16	18	20	22	24
MOC	ASTM A 182 F 316 L																
Spectacle	ASME B 16.48																
Mechanical Joints																	
Stud Bolts	ASTM A 193 Gr. B7																
Hex Nuts	ASTM A 194 Gr. 2H																
Gasket	ASME B 16.20,5mm, SS Spiral wound with CNAF filler																

Pressure-Temperature Rating				Maximum Hydrostatic Pressure	
Temp.,Deg F	Pressure, PSI	Temp,Deg C	Pressure, Kg/cm2	Pressure, psig	Pres.,Kg/cm2g
60/100	600	16/38	42.19	900 psig	63.3 Kg/cm2
200	505	93	35.51	Limited by Flange considereing flange as the weakest joint in piping system	

Notes Releted to Pipe,Fittings,Flanges,Gasket and Stud Bolts -Nuts

1. Welded fittings shall be 100% radiographed.
2.All alloy steel stud bolts and nuts shall be hot dip galvanized or electrogalvanized with minimum coating as per spec.
3. Spectacle blinds and spacer sizes and rating that are not available in ASME B 16.48 shall be as per manufacturer standard. Design shall be submitted to company for approval.
4. All pipe thread shall be as per ASME B 1.20.1
5. PMS to be read in conjuction with FS 2004 A.
6. Contractor use Schedule 80 for sizes less than 1/1/2" for threaded pipe and fittings.
7. Minimum sizes shall be 0.75 inch for piping other than air,instrument water and manufacturer's standard piping.

Offshore Design Section Engineering Services IS0-9001:2000	**PIPING MATERIAL SPECIFICATION**				Sheet No.	**2 of 2**	
	Piping Class		Material	C.A	Spec.No	Revision: 1	
	B 22	# 300	SS 316 L	Nil	2004A,Rev 9	Page No.	80
	Design Code:		**ASME B 31.3**				
	Service:		Chemical				
	0						

Branch Table as per API RP 14E

LEGEND	
*	Sockolet
W	Weldolet
T	TEE

Run Pipe \ Branch Pipe	≤ 1	1-1.5	2	3	4	6	8	10	12	14	16	18	20	24	30
≤ 1	T														
1-1.5	T	T													
2	*	*	T												
3	*	*	T	T											
4	*	*	T	T	T										
6	*	*	W	T	T	T									
8	*	*	W	W	T	T	T								
10	*	*	W	W	W	T	T	T							
12	*	*	W	W	W	T	T	T	T						
14	*	*	W	W	W	W	T	T	T	T					
16	*	*	W	W	W	W	T	T	T	T	T				
18	*	*	W	W	W	W	W	T	T	T	T	T			
20	*	*	W	W	W	W	W	T	T	T	T	T	T		
24	*	*	W	W	W	W	W	W	T	T	T	T	T	T	
30	*	*	W	W	W	W	W	W	W	W	T	T	T	T	T

Valve Data

Size(in)	0.5	0.75	1	1.5	2	3	4	6	8	10	12	14	16	18	20	22	24
Gate Valve																	
TAG	VB-131				VB-151												
Rating	# 800, SW				# 300, RF												
Plug Valve																	
TAG																	
Rating																	
Ball Valve																	
TAG	VB-131				VB-152												
Rating	# 800, SW				# 300, RF												
Globe Valve																	
TAG	VGL - 131				VGL - 154												
Rating	# 800, SW				# 300, RF												
Check Valve																	
TAG	VC - 131, Lift Check				VC - 154, Swing Check												
Rating	# 800, SW				# 300, RF												
Needle Valve																	
TAG	VN-111																
Rating	# 800, SW																
Butter Fly Valve																	
TAG																	
Rating																	

Notes Releted to Valve and Brach Connection

1. PMS to be read in conjuction with FS 2004 A.

Revision	Date	Description	Prepared By	Reviewed By	Approved By
Revision: 1	22/7/2009	Issued For Bid	PS	GJ	GRP

	Offshore Design Section Engineering Services IS0-9001:2000				**PIPING MATERIAL SPECIFICATION**									Sheet No.		**1 of 2**	
					Piping Class				Material			C.A	Spec.No			Revision:2	
					D 22		# 600		SS 316 L			Nil	2004A,Rev 9			Page No.	81
					Design Code:				**ASME B 31.3**								
					Service:				Chemical								
Pipe Data	ASME B 36.19																
Size(in)	0.5	0.75	1	1.5	2	3	4	6	8	10	12	14	16	18	20	22	24
O.D.mm	21.3	26.7	33.4	48.3	60.3	88.9	114.3	168.3	219.1	273.1	323.9	355.6	406.4	457.2	508	558.8	609.6
Sch.	40s	40s	40s	80s	40s	40s	40s	80s									
WTmm	2.77	2.87	3.38	5.08	3.91	5.49	6.02	10.97									
M.T (%)	12.5	12.5	12.5	12.5	12.5	12.5	12.5	12.5									
TYPE	Seamless																
MOC	ASTM A 312 TP 316L																
Ends	PE				BE												
Fittings Data																	
Size(in)	0.5	0.75	1	1.5	2	3	4	6	8	10	12	14	16	18	20	22	24
TYPE	SW				Butt Weld												
Rating	# 3000			# 6000	40s	40s	40s	80s									
MOC	ASTM A 182 F 316L U.N.O				ASTM A 403 Gr. WP 316L , Seamless												
Elbow	ASMEB16.11				ASME B 16.9												
Tee	ASMEB16.11				ASME B 16.9												
Red.	ASMEB16.11				ASME B 16.9												
Cap	ASMEB16.11				ASME B 16.9												
Coupl	ASMEB16.11				ASME B 16.9												
Plug	ASMEB16.11				ASME B 16.9												
Union																	
Elbowlet	MSS SP 97				MSS SP 97,ASTM A 182 F 316L												
Sockolet	MSS SP 97				MSS SP 97,ASTM A 182 F 316L												
Weldolet	MSS SP 97				MSS SP 97,ASTM A 182 F 316L												
Nipple	MSS SP 97,Same as pipe				MOC Same as pipe												
Swage	MSS SP 95,Same as pipe				MSS SP 95, MOC Same as pipe												
Flange																	
Size(in)	0.5	0.75	1	1.5	2	3	4	6	8	10	12	14	16	18	20	22	24
TYPE	SW				WN												
MOC	ASTM A 182 F 316 L				ASTM A 182 F 316 L												
FACE	RF-Smooth Finished				RF, Smooth Finished												
STD.	ASME B 16.5				B 16.5, But welding ends as per B 16.25												
Spectacle Blind/Spacer Blinds																	
Size(in)	0.5	0.75	1	1.5	2	3	4	6	8	10	12	14	16	18	20	22	24
MOC	ASTM A 182 F 316 L																
Spectacle	ASME B 16.48																
Mechanical Joints																	
Stud Bolts	ASTM A 193 Gr. B7																
Hex Nuts	ASTM A 194 Gr. 2H																
Gasket	ASME B 16.20,5mm, SS Spiral wound with CNAF filler																

Pressure-Temperature Rating				Maximum Hydrostatic Pressure	
Temp.,Deg F	Pressure, PSI	Temp,Deg C	Pressure, Kg/cm2	Pressure, psig	Pres.,Kg/cm2g
60/100	1200	16/38	84.4	1800 psig	126.6 Kg/cm2
200	1015	93	71.38	Limited by Flange considereing flange as the weakest joint in piping system	

Notes Releted to Pipe,Fittings,Flanges,Gasket and Stud Bolts -Nuts

1. Welded fittings shall be 100% radiographed.
2.All alloy steel stud bolts and nuts shall be hot dip galvanized or electrogalvanized with minimum coating as per spec.
3. Spectacle blinds and spacer sizes and rating that are not available in ASME B 16.48 shall be as per manufacturer standard. Design shall be submitted to company for approval.
4. All pipe thread shall be as per ASME B 1.20.1
5. PMS to be read in conjuction with FS 2004 A.
6. Contractor use Schedule 80 for sizes less than 1/1/2" for threaded pipe and fittings.
7. Minimum sizes shall be 0.75 inch for piping other than air,instrument water and manufacturer's standard piping.

Offshore Design Section Engineering Services IS0-9001:2000	PIPING MATERIAL SPECIFICATION				Sheet No.	2 of 2
	Piping Class	Material	C.A	Spec.No	Revision:2	
	D 22 # 600	SS 316 L	Nil	2004A,Rev 9	Page No.	82
	Design Code:	**ASME B 31.3**				
	Service:	Chemical				
	0					

Branch Table as per API RP 14E

LEGEND	
*	Sockolet
W	Weldolet
T	TEE

Run Pipe	≤ 1	1-1.5	2	3	4	6	8	10	12	14	16	18	20	24	30
≤ 1	T														
1-1.5	T	T													
2	*	*	T												
3	*	*	T	T											
4	*	*	T	T	T										
6	*	*	W	T	T	T									
8	*	*	W	W	T	T	T								
10	*	*	W	W	W	T	T	T							
12	*	*	W	W	W	T	T	T	T						
14	*	*	W	W	W	W	T	T	T	T					
16	*	*	W	W	W	W	T	T	T	T	T				
18	*	*	W	W	W	W	W	T	T	T	T	T			
20	*	*	W	W	W	W	W	T	T	T	T	T	T		
24	*	*	W	W	W	W	W	W	T	T	T	T	T	T	
30	*	*	W	W	W	W	W	W	W	W	T	T	T	T	T

Branch Pipe

Valve Data

Size(in)	0.5	0.75	1	1.5	2	3	4	6	8	10	12	14	16	18	20	22	24
Gate Valve																	
TAG	VB-131				VB-251												
Rating	# 800, SW				# 600, RF												
Plug Valve																	
TAG																	
Rating																	
Ball Valve																	
TAG	VB-131				VB-258												
Rating	# 800, SW				# 600, RF												
Globe Valve																	
TAG	VGL - 131				VGL - 255												
Rating	# 800, SW				# 600, RF												
Check Valve																	
TAG	VC - 131, Lift Check				VC - 255, Swing Check												
Rating	# 800, SW				# 600, RF												
Needle Valve																	
TAG	VN-111																
Rating	# 800, SW																
Butter Fly Valve																	
TAG																	
Rating																	

Notes Releted to Valve and Brach Connection

1. PMS to be read in conjuction with FS 2004 A.

Revision	Date	Description	Prepared By	Reviewed By	Approved By
Revision:2	15.01.16	Issued For Bid	PS	AKM	SJ

Offshore Design Section Engineering Services IS0-9001:2000	PIPING MATERIAL SPECIFICATION				Sheet No.	1 of 2
	Piping Class	Material	C.A	Spec.No	Revision:0	
	E 22 #900	SS 316 L	Nil	2004A,Rev 9	Page No.	83
	Design Code:	**ASME B 31.3**				
	Service:	Chemical				

Pipe Data	ASME B 36.19																
Size(in)	0.5	0.75	1	1.5	2	3	4	6	8	10	12	14	16	18	20	22	24
O.D.mm	21.3	26.7	33.4	48.3	60.3	88.9	114.3	168.3	219.1	273.1	323.9	355.6	406.4	457.2	508	558.8	609.6
Sch.	80s	80s	80s	160	80s	80s	80s	80s									
WTmm	3.73	3.9	4.6	7.14	5.54	7.62	8.56	10.97									
M.T (%)	12.5	12.5	12.5	12.5	12.5	12.5	12.5	12.5									
TYPE	Seamless																
MOC	ASTM A 312 TP 316L																
Ends	PE				BE												
Fittings Data																	
Size(in)	0.5	0.75	1	1.5	2	3	4	6	8	10	12	14	16	18	20	22	24
TYPE	SW				Butt Weld												
Rating	# 3000			# 6000	80s	80s	80s	80s									
MOC	ASTM A 182 F 316L U.N.O				ASTM A 403 Gr. WP 316L , Seamless												
Elbow	ASMEB16.11				ASME B 16.9												
Tee	ASMEB16.11				ASME B 16.9												
Red.	ASMEB16.11				ASME B 16.9												
Cap	ASMEB16.11				ASME B 16.9												
Coupl	ASMEB16.11				ASME B 16.9												
Plug	ASMEB16.11				ASME B 16.9												
Union																	
Elbowlet	MSS SP 97				MSS SP 97,ASTM A 182 F 316L												
Sockolet	MSS SP 97				MSS SP 97,ASTM A 182 F 316L												
Weldolet	MSS SP 97				MSS SP 97,ASTM A 182 F 316L												
Nipple	MSS SP 97,Same as pipe				MOC Same as pipe												
Swage	MSS SP 95,Same as pipe				MSS SP 95, MOC Same as pipe												
Flange																	
Size(in)	0.5	0.75	1	1.5	2	3	4	6	8	10	12	14	16	18	20	22	24
TYPE	SW				WN												
MOC	ASTM A 182 F 316 L				ASTM A 182 F 316 L												
FACE	RTJ-Note 8				RTJ-Note 8												
STD.	ASME B 16.5				6.5, But welding ends as per B 16.25												
Spectacle Blind/Spacer Blinds																	
Size(in)	0.5	0.75	1	1.5	2	3	4	6	8	10	12	14	16	18	20	22	24
MOC	ASTM A 182 F 316 L																
Spectacle	ASME B 16.48																
Mechanical Joints																	
Stud Bolt	ASTM A 193 Gr. B7																
Hex Nuts	ASTM A 194 Gr. 2H																
Gasket	ME B 16.20,OCT ring of SS316L with Max. Hardness of 120 BHN																

Pressure-Temperature Rating				Maximum Hydrostatic Pressure	
Temp.,Deg F	Pressure, PSI	Temp,Deg C	Pressure, Kg/cm2	Pressure, psig	Pres.,Kg/cm2g
- 20/100	1799.96	-28.8/38	126.55	2700 psig	189.83
200	1534.98	93	107.92	Limited by Flange considereing flange as the weakest joint in piping system	

Notes Releted to Pipe,Fittings,Flanges,Gasket and Stud Bolts -Nuts

1. Welded fittings shall be 100% radiographed.
2. All alloy steel stud bolts and nuts shall be hot dip galvanized or electrogalvanized with minimum coating as per spec.
3. Spectacle blinds and spacer sizes and rating that are not available in ASME B 16.48 shall be as per manufacturer standard. Design shall be submitted to company for approval.
4. All pipe thread shall be as per ASME B 1.20.1
5. PMS to be read in conjuction with FS 2004 A.
6. Contractor use Schedule 80 for sizes less than 1/1/2" for threaded pipe and fittings.
7. Minimum sizes shall be 0.75 inch for piping other than air,instrument water and manufacturer's standard piping.
8. RTJ groove hardness shall be 140 BHN

Offshore Design Section Engineering Services IS0-9001:2000	PIPING MATERIAL SPECIFICATION				Sheet No.	2 of 2	
	Piping Class		Material	C.A	Spec.No	Revision:0	
	E 22	#900	SS 316 L	Nil	2004A,Rev 9	Page No.	84
	Design Code:		**ASME B 31.3**				
	Service:	Chemical					
	0						

Branch Table as per API RP 14E

Run Pipe \ Branch Pipe	≤ 1	1-1.5	2	3	4	6	8	10	12	14	16	18	20	24	30
≤ 1	T														
1-1.5	T	T													
2	*	*	T												
3	*	*	T	T											
4	*	*	T	T	T										
6	*	*	W	T	T	T									
8	*	*	W	W	T	T	T								
10	*	*	W	W	W	T	T	T							
12	*	*	W	W	W	T	T	T	T						
14	*	*	W	W	W	W	T	T	T	T					
16	*	*	W	W	W	W	T	T	T	T	T				
18	*	*	W	W	W	W	W	T	T	T	T	T			
20	*	*	W	W	W	W	W	T	T	T	T	T	T		
24	*	*	W	W	W	W	W	W	T	T	T	T	T	T	
30	*	*	W	W	W	W	W	W	W	W	T	T	T	T	T

LEGEND	
*	Sockolet
W	Weldolet
T	TEE

Valve Data

Size(in)	0.5	0.75	1	1.5	2	3	4	6	8	10	12	14	16	18	20	22	24
Gate Valve																	
TAG	VG-132				VB-255												
Rating	# 1500, SW				# 900, RTJ FLGD												
Plug Valve																	
TAG																	
Rating																	
Ball Valve																	
TAG	Use Gate Valve				VB-258												
Rating	# 1500, SW				# 900, RTJ FLGD												
Globe Valve																	
TAG	VGL - 132				VGL - 254												
Rating	# 1500, SW				# 900, RTJ, FLGD												
Check Valve																	
TAG	VC - 132, Lift Check				VC - 255, Swing Check												
Rating	# 1500, SW				# 900, RTJ, FLGD												
Needle Valve																	
TAG	VN-112																
Rating	# 1500, SW																
Butter Fly Valve																	
TAG																	
Rating																	

Notes Releted to Valve and Brach Connection

1. PMS to be read in conjuction with FS 2004 A.

Revision	Date	Description	Prepared By	Reviewed By	Approved By
Revision:0	15.01.16	Issued For Bid	PS	AKM	SJ

	Offshore Design Section Engineering Services IS0-9001:2000	**PIPING MATERIAL SPECIFICATION**												Sheet No.		**1 of 2**	
		Piping Class				Material				C.A		Spec.No				Revision: 2	
		A23				# 150				DSS-NACE		Nil		2004A,Rev 9		Page No.	85
		Design Code: ASME B 31.3 and other applicable Code NACE-MR-01-75/ISO-15156-1/2/3															
		Service: Corrosive HydroCarbon Service-Sour Liquid and Vapour.															

Pipe Data	ASME B 36.10																
Size(in)	0.5	0.75	1	1.5	2	3	4	6	8	10	12	14	16	18	20	22	24
O.D.mm	21.3	26.7	33.4	48.3	60.3	88.9	114.3	168.3	219.1	273.1	323.9	355.6	406.4	457.2	508	558.8	609.6
Sch.	40s	40s	40s	40s	10s	10s	10s	10s	10s	10s	10s	10s	10s	10s	10s	10s	10s
WTmm	2.77	2.87	3.38	3.68	2.77	3.05	3.05	3.4	3.76	4.19	4.57	4.77	4.77	4.77	5.54	5.54	6.35
M.T (%)	12.5	12.5	5.0	6.0	12.5	12.5	12.5	12.5	12.5	12.5	12.5	12.5	12.5	12.5	12.5	12.5	12.5
TYPE	Seamless									Welded (Longitudinally) with 100% radiography							
MOC	ASTM A 790 Gr. S 32205									ASTM A 790 Gr. 32205							
Ends	PE				BE												
Fittings Data																	
Size(in)	0.5	0.75	1	1.5	2	3	4	6	8	10	12	14	16	18	20	22	24
TYPE	Socket Weld				Butt Weld												
Rating	# 3000				10s	10s	10s	10s	10s	10s	10s	10s	10s	10s	10s	10s	10s
MOC	ASTM A 182 Gr. F60				ASTM A 815 Gr.WP-S U.N.S 32205					ASTM A 815 Gr.WP-WX U.N.S 32205							
Elbow	ASMEB16.11				ASME B 16.9					ASME B 16.9							
Tee	ASMEB16.11				ASME B 16.9					ASME B 16.9							
Red.	ASMEB16.11				ASME B 16.9					ASME B 16.9							
Cap	ASMEB16.11				ASME B 16.9					ASME B 16.9							
Coupl	ASMEB16.11				ASME B 16.9					ASME B 16.9							
Plug	ASMEB16.11				ASME B 16.9					ASME B 16.9							
Union																	
Elbowlet	MSS SP 97,ASTM A 182 Gr. F60				MSS SP 97,ASTM A 182 Gr. F60					MSS SP 97,ASTM A 182 Gr. F60							
Sockolet	MSS SP 97,ASTM A 182 Gr. F60				MSS SP 97,ASTM A 182 Gr. F60					MSS SP 97,ASTM A 182 Gr. F60							
Weldolet	MSS SP 97,ASTM A 182 Gr. F60				MSS SP 97,ASTM A 182 Gr. F60					MSS SP 97,ASTM A 182 Gr. F60							
Nipple	MSS SP 97,Same as pipe				MOC Same as pipe					MSS SP 97,ASTM A 182 Gr. F60							
Swage	MSS SP 95,Same as pipe				MSS SP 95, MOC Same as pipe					MSS SP 97,ASTM A 182 Gr. F60							
Flange																	
Size(in)	0.5	0.75	1	1.5	2	3	4	6	8	10	12	14	16	18	20	22	24
TYPE	SW				WN												
MOC	ASTM A 182 Gr. F60				ASTM A 182 Gr. F60												
FACE	RF,Serrated Finnished				RF,Serrated Finnished												
STD.	ASME B 16.5				ASME B 16.5, But welding ends as per ASME B 16.25												
Spectacle Blind/Spacer Blinds																	
Size(in)	0.5	0.75	1	1.5	2	3	4	6	8	10	12	14	16	18	20	22	24
MOC	ASTM A 182 Gr. F60																
Spectacle	ASME B 16.48				ASME B 16.48							Spacer and blind as per ASME B 16.48					
Mechanical Joints																	
Stud Bolts	ASTM A 453 Gr. 660 CL A																
Hex Nuts	ASTM A 453 Gr. 660 CL A																
Gasket	ASME B 16.20 , 5mm thick Duplex SS Spiral wound gasket with CNAF filler																

Pressure-Temperature Rating				Maximum Hydrostatic Pressure	
Temp.,Deg F	Pressure, PSI	Temp,Deg C	Pressure, Kg/cm2	Pressure, psig	Pres.,Kg/cm2g
60 to 100	290	16 to 38	20.4	435 psig	30.6 Kg/cm2
200	260	93	18.3	Limited by Flange considereing flange as the weakest joint in piping system	
250	245	121	17.2		

Notes Releted to Pipe,Fittings,Flanges,Gasket and Stud Bolts -Nuts

1. Spectacle blinds and spacer sizes and rating that are not available in ASME B 16.48 shall be as per manufacturer standard. Design shall be submitted to company for review and approval
2. Two jackscrew, 180 degree apart shall be provided in one of the flanges for all orifice flange, specified spectacle blinds and
3. All pipe thread shall be as per ASME B 1.20.1
4. PMS to be read in conjuction with FS 2004 A.
5. Weld Joint Factor for welded pipe shall be as per ASME B 31.3
6. Contractor to use Schedule 80 for sizes less than 1/1/2" for threaded pipe and fittings.
7. Material shall comply heat treatment requirement of NACE MR 01 75/ISO-15156-3 inadditon to the requirement of this material standard.
8. Allowable stress considered for this material shall be based on testing and actual evaluation of allowable stress of the material within the temperature range for which this material is to be used..
9. Thickness indicated is for referance only. To be finalized based on Note- 7,8 above.

Offshore Design Section Engineering Services IS0-9001:2000	**PIPING MATERIAL SPECIFICATION**				Sheet No.	**2 of 2**	
	Piping Class		Material	C.A	Spec.No	Revision: 2	
	A23	# 150	DSS-NACE	Nil	2004A,Rev 9	Page No.	86
	Design Code: ASME B 31.3 and other applicable Code NACE-MR-01-75/ISO-15156-1/2/3						
	Service:	Corrosive HydroCarbon Service-Sour Liquid and Vapour.					
	0						

Branch Table as per API RP 14E

LEGEND	
*	Sockolet
W	Weldolet
T	TEE

Run Pipe	≤ 1	1-1.5	2	3	4	6	8	10	12	14	16	18	20	24	30
≤ 1	T														
1-1.5	T	T													
2	*	*	T												
3	*	*	T	T											
4	*	*	T	T	T										
6	*	*	W	T	T	T									
8	*	*	W	W	T	T	T								
10	*	*	W	W	W	T	T	T							
12	*	*	W	W	W	T	T	T	T						
14	*	*	W	W	W	W	T	T	T	T					
16	*	*	W	W	W	W	T	T	T	T	T				
18	*	*	W	W	W	W	W	T	T	T	T	T			
20	*	*	W	W	W	W	W	T	T	T	T	T	T		
24	*	*	W	W	W	W	W	W	T	T	T	T	T	T	
30	*	*	W	W	W	W	W	W	W	W	T	T	T	T	T

	Branch Pipe																
Valve Data																	
Size(in)	0.5	0.75	1	1.5	2	3	4	6	8	10	12	14	16	18	20	22	24
Gate Valve																	
TAG	VG 133,SW				VG 158,FLANGED												
Rating	# 800				# 150,RF												
Plug Valve																	
TAG																	
Rating																	
Ball Valve																	
TAG	VB 133,SW				VB 165, Lever Operated												
Rating	# 800				# 150,RF												
Globe Valve																	
TAG	VGL 133,SW				VGL 158												
Rating	# 800				# 150,RF												
Check Valve																	
TAG	VC 133,SW,Lift Check				VC 159,Swing Check												
Rating	# 800				# 150,RF												
Needle Valve																	
TAG	VN 103,SW																
Rating	# 800																
Butter Fly Valve																	
TAG																	
Rating																	

Notes Releted to Valve and Brach Connection

1. PMS to be read in conjuction with FS 2004 A.
2. Maximum temperature limit for all Ball Valve shall be 121 Degree C

Revision	Date	Description	Prepared By	Reviewed By	Approved By
Revision: 2	15.01.16	Issued For Bid	PS	AKM	SJ

Offshore Design Section Engineering Services IS0-9001:2000	PIPING MATERIAL SPECIFICATION				Sheet No.	1 of 2
	Piping Class	Material	C.A	Spec.No	Revision: 2	
	B23	# 300	DSS-NACE	Nil	2004A,Rev 9	Page No. 87
	Design Code: ASME B 31.3 and other applicable Code NACE-MR-01-75/ISO-15156-1/2/3					
	Service: Corrosive HydroCarbon Service-Sour Liquid and Vapour.					

Pipe Data	ASME B 36.19																
Size(in)	0.5	0.75	1	1.5	2	3	4	6	8	10	12	14	16	18	20	22	24
O.D.mm	21.3	26.7	33.4	48.3	60.3	88.9	114.3	168.3	219.1	273.1	323.9	355.6	406.4	457.2	508	558.8	609.6
Sch.	40s	40s	40s	40s	40s	10s	10s	10s	10s	10s	20	10	10	20	20	20	20
WTmm	2.77	2.87	3.38	3.68	3.91	3.05	3.05	3.4	3.76	4.19	6.35	6.35	6.35	7.92	9.52	9.52	9.53
M.T (%)	12.5	12.5	12.5	12.5	12.5	12.5	12.5	12.5	12.5	12.5	12.5	12.5	12.5	12.5	12.5	12.5	12.5
TYPE	Seamless									Welded (Longitudinally) with 100% radiography							
MOC	ASTM A 790 Gr. S 32205									ASTM A 790 Gr. 32205				ASTM A 928 Class 1 ,Gr. 32205(Note-6,7,8)			
Ends	PE				BE												
Fittings Data																	
Size(in)	0.5	0.75	1	1.5	2	3	4	6	8	10	12	14	16	18	20	22	24
TYPE	Socket Weld				Butt Weld												
Rating	# 3000				10s	10s	10s	10s	10s	10s	20	10	10	20	20	20	20
MOC	ASTM A 182 Gr. F60				ASTM A 815 Gr.WP-S U.N.S 32205					ASTM A 815 Gr.WP-WX U.N.S 32205							
Elbow	ASMEB16.11				ASME B 16.9					ASME B 16.9							
Tee	ASMEB16.11				ASME B 16.9					ASME B 16.9							
Red.	ASMEB16.11				ASME B 16.9					ASME B 16.9							
Cap	ASMEB16.11				ASME B 16.9					ASME B 16.9							
Coupl	ASMEB16.11				ASME B 16.9					ASME B 16.9							
Plug	ASMEB16.11				ASME B 16.9					ASME B 16.9							
Union																	
Elbowlet	MSS SP 97,ASTM A 182 Gr. F60				MSS SP 97,ASTM A 182 Gr. F60					MSS SP 97,ASTM A 182 Gr. F60							
Sockolet	MSS SP 97,ASTM A 182 Gr. F60				MSS SP 97,ASTM A 182 Gr. F60					MSS SP 97,ASTM A 182 Gr. F60							
Weldolet	MSS SP 97,ASTM A 182 Gr. F60				MSS SP 97,ASTM A 182 Gr. F60					MSS SP 97,ASTM A 182 Gr. F60							
Nipple	MSS SP 97,Same as pipe				MOC Same as pipe					MSS SP 97,ASTM A 182 Gr. F60							
Swage	MSS SP 95,Same as pipe				MSS SP 95, MOC Same as pipe					MSS SP 97,ASTM A 182 Gr. F60							
Flange																	
Size(in)	0.5	0.75	1	1.5	2	3	4	6	8	10	12	14	16	18	20	22	24
TYPE	SW				WN												
MOC	ASTM A 182 Gr. F60				ASTM A 182 Gr. F60												
FACE	RF,Smooth Finnished				RF,Smooth Finnished												
STD.	ASME B 16.5				ASME B 16.5, But welding ends as per ASME B 16.25												
Spectacle Blind/Spacer Blinds																	
Size(in)	0.5	0.75	1	1.5	2	3	4	6	8	10	12	14	16	18	20	22	24
MOC	ASTM A 182 Gr. F60																
Spectacle	ASME B 16.48				ASME B 16.48							Spacer and blind as per ASME B 16.48					
Mechanical Joints																	
Stud Bolts	ASTM A 453 Gr. 660 CL A																
Hex Nuts	ASTM A 453 Gr. 660 CL A																
Gasket	ASME B 16.20 , 5mm thick Duplex SS Spiral wound gasket with CNAF filler																

Pressure-Temperature Rating				Maximum Hydrostatic Pressure	
Temp.,Deg F	Pressure, PSI	Temp,Deg C	Pressure, Kg/cm2	Pressure, psig	Pres.,Kg/cm2g
60 to 100	750	16 to 38	52.74	1125 psig	79.1 Kg/cm2
200	720	93	50.63	Limited by Flange considereing flange as the weakest joint in piping system	
250	692.5	121	48.69		
302	664	150	46.69		

Notes Releted to Pipe,Fittings,Flanges,Gasket and Stud Bolts -Nuts

1. Spectacle blinds and spacer sizes and rating that are not available in ASME B 16.48 shall be as per manufacturer standard. Design shall be submitted to company for review and approval.
2. Two jackscrew, 180 degree apart shall be provided in one of the flanges for all orifice flange, specified spectacle blinds and flanges.
3. All pipe thread shall be as per ASME B 1.20.1
4. PMS to be read in conjuction with FS 2004 A.
5. Weld Joint Factor for welded pipe shall be as per ASME B 31.3
6. Contractor to use Schedule 80 for sizes less than 1/1/2" for threaded pipe and fittings.
7. Material shall comply heat treatment requirement of NACE MR 01 75/ISO-15156-3 inadditon to the requirement of this material standard.
8. Allowable stress considered for this material shall be based on testing and actual evaluation of allowable stress of the material within the temperature range for which this material is to be used..
9. Thickness indicated is for referance only. To be finalized based on Note- 7,8 above.

Offshore Design Section Engineering Services IS0-9001:2000	**PIPING MATERIAL SPECIFICATION**				Sheet No.	**2 of 2**	
	Piping Class		Material	C.A	Spec.No	Revision: 2	
	B23	# 300	DSS-NACE	Nil	2004A,Rev 9	Page No.	88
	Design Code: ASME B 31.3 and other applicable Code NACE-MR-01-75/ISO-15156-1/2/3						
	Service:	Corrosive HydroCarbon Service-Sour Liquid and Vapour.					
	0						

Branch Table as per API RP 14E

Run Pipe \ Branch Pipe	≤ 1	1-1.5	2	3	4	6	8	10	12	14	16	18	20	24	30
≤ 1	T														
1-1.5	T	T													
2	*	*	T												
3	*	*	T	T											
4	*	*	T	T	T										
6	*	*	W	T	T	T									
8	*	*	W	W	T	T	T								
10	*	*	W	W	W	T	T	T							
12	*	*	W	W	W	T	T	T	T						
14	*	*	W	W	W	W	T	T	T	T					
16	*	*	W	W	W	W	T	T	T	T	T				
18	*	*	W	W	W	W	W	T	T	T	T	T			
20	*	*	W	W	W	W	W	T	T	T	T	T	T		
24	*	*	W	W	W	W	W	W	T	T	T	T	T	T	
30	*	*	W	W	W	W	W	W	W	W	T	T	T	T	T

LEGEND	
*	Sockolet
W	Weldolet
T	TEE

Valve Data

Size(in)	0.5	0.75	1	1.5	2	3	4	6	8	10	12	14	16	18	20	22	24
Gate Valve																	
TAG	VG 133,SW				VG 159,FLANGED												
Rating	# 800				# 300,RF												
Plug Valve																	
TAG																	
Rating																	
Ball Valve																	
TAG	VB 133,SW				VB 166												
Rating	# 800				# 300,RF												
Globe Valve																	
TAG	VGL 133,SW				VGL 159												
Rating	# 800				# 300,RF												
Check Valve																	
TAG	VC 133,SW,Lift Check				VC 159,Swing Check												
Rating	# 800				# 300,RF												
Needle Valve																	
TAG	VN 103,SW																
Rating	# 800																
Butter Fly Valve																	
TAG																	
Rating																	

Notes Releted to Valve and Brach Connection

1. PMS to be read in conjuction with FS 2004 A.
2. Maximum temperature limit for all Ball Valve shall be 121 Degree C

Revision	Date	Description	Prepared By	Reviewed By	Approved By
Revision: 2	15.01.16	Issued For Bid	PS	AKM	SJ

	Offshore Design Section Engineering Services IS0-9001:2000				**PIPING MATERIAL SPECIFICATION**									Sheet No.		**1 of 2**	
					Piping Class				Material			C.A	Spec.No			Revision: 2	
					D23				# 600			DSS-NACE	Nil	2004A,Rev 9		Page No	89
					Design Code: ASME B 31.3 and other applicable Code NACE-MR-01-75/ISO-15156-1/2/3												
					Service: Corrosive HydroCarbon Service-Sour Liquid and Vapour.												
Pipe Data	ASME B 36.19																
Size(in)	0.5	0.75	1	1.5	2	3	4	6	8	10	12	14	16	18	20	22	24
O.D.mm	21.3	26.7	33.4	48.3	60.3	88.9	114.3	168.3	219.1	273.1	323.9	355.6	406.4	457.2	508	558.8	609.6
Sch.	40s	40s	40s	40s	10s	10s	40s	40s	40s	40s	40s	40	40	40	40	60	60
WTmm	2.77	2.87	3.38	3.68	2.77	3.05	6.02	7.11	8.18	9.27	9.52	11.12	12.7	14.27	15.08	22.22	24.61
M.T (%)	12.5	12.5	12.5	12.5	12.5	12.5	12.5	12.5	12.5	12.5	12.5	12.5	12.5	12.5	12.5	12.5	12.5
TYPE	Seamless									Welded (Longitudinally) with 100% radiography							
MOC	ASTM A 790 Gr. S 32205									ASTM A 928 Class 1,Gr. 32205 (Note-6,7,8)							
Ends	PE				BE												
Fittings Data																	
Size(in)	0.5	0.75	1	1.5	2	3	4	6	8	10	12	14	16	18	20	22	24
TYPE	Socket Weld				Butt Weld												
Rating	# 3000				10s	10s	40s	40s	40s	40s	40s	40	40	40	40	60	60
MOC	ASTM A 182 Gr. F60				ASTM A 815 Gr.WP-S U.N.S 32205					ASTM A 815 Gr.WP-WX U.N.S 32205							
Elbow	ASMEB16.11				ASME B 16.9					ASME B 16.9							
Tee	ASMEB16.11				ASME B 16.9					ASME B 16.9							
Red.	ASMEB16.11				ASME B 16.9					ASME B 16.9							
Cap	ASMEB16.11				ASME B 16.9					ASME B 16.9							
Coupl	ASMEB16.11				ASME B 16.9					ASME B 16.9							
Plug	ASMEB16.11				ASME B 16.9					ASME B 16.9							
Union																	
Elbowlet	MSS SP 97,ASTM A 182 Gr. F60				MSS SP 97,ASTM A 182 Gr. F60					MSS SP 97,ASTM A 182 Gr. F60							
Sockolet	MSS SP 97,ASTM A 182 Gr. F60				MSS SP 97,ASTM A 182 Gr. F60					MSS SP 97,ASTM A 182 Gr. F60							
Weldolet	MSS SP 97,ASTM A 182 Gr. F60				MSS SP 97,ASTM A 182 Gr. F60					MSS SP 97,ASTM A 182 Gr. F60							
Nipple	MSS SP 97,Same as pipe				MOC Same as pipe					MSS SP 97,ASTM A 182 Gr. F60							
Swage	MSS SP 95,Same as pipe				MSS SP 95, MOC Same as pipe					MSS SP 97,ASTM A 182 Gr. F60							
Flange																	
Size(in)	0.5	0.75	1	1.5	2	3	4	6	8	10	12	14	16	18	20	22	24
TYPE	SW				WN												
MOC	ASTM A 182 Gr. F60				ASTM A 182 Gr. F60												
FACE	RF,Smooth Finnished				RF,Smooth Finnished												
STD.	ASME B 16.5				ASME B 16.5, But welding ends as per ASME B 16.25												
Spectacle Blind/Spacer Blinds																	
Size(in)	0.5	0.75	1	1.5	2	3	4	6	8	10	12	14	16	18	20	22	24
MOC	ASTM A 182 Gr. F60																
Spectacle	ASME B 16.48				ASME B 16.48							Spacer and blind as per ASME B 16.48					
Mechanical Joints																	
Stud Bolts	ASTM A 453 Gr. 660 CL A																
Hex Nuts	ASTM A 453 Gr. 660 CL A																
Gasket	ASME B 16.20 , 5mm thick Duplex SS Spiral wound gasket with CNAF filler																

Pressure-Temperature Rating				Maximum Hydrostatic Pressure	
Temp.,Deg F	Pressure, PSI	Temp,Deg C	Pressure, Kg/cm2	Pressure, psig	Pres.,Kg/cm2g
60 to 100	1500	16 to 38	105.5	2250 psig	158.2 Kg/cm2
200	1440	93	101.24	Limited by Flange considereing flange as the weakest joint in piping system	
250	1385	121	97.38		

Notes Releted to Pipe,Fittings,Flanges,Gasket and Stud Bolts -Nuts

1. Spectacle blinds and spacer sizes and rating that are not available in ASME B 16.48 shall be as per manufacturer standard. Design shall be submitted to company for review and approval.
2. Two jackscrew, 180 degree apart shall be provided in one of the flanges for all orifice flange, specified spectacle blinds and flanges.
3. All pipe thread shall be as per ASME B 1.20.1
4. PMS to be read in conjuction with FS 2004 A.
5. Weld Joint Factor for welded pipe shall be as per ASME B 31.3
5. Contractor to use Schedule 80 for sizes less than 1/1/2" for threaded pipe and fittings.
6. Material shall comply heat treatment requirement of NACE MR 01 75/ISO-15156-3 inadditon to the requirement of this material standard.
7. Allowable stress considered for this material shall be based on testing and actual evaluation of allowable stress of the material within the temperature range for which this material is to be used..
8. Thickness indicated is for referance only. To be finalized based on Note- 7 above.

Offshore Design Section Engineering Services IS0-9001:2000	**PIPING MATERIAL SPECIFICATION**				Sheet No.	**2 of 2**	
	Piping Class		Material	C.A	Spec.No	Revision: 2	
	D23	# 600	DSS-NACE	Nil	2004A,Rev 9	Page No	90
	Design Code: ASME B 31.3 and other applicable Code NACE-MR-01-75/ISO-15156-1/2/3						
	Service:	Corrosive HydroCarbon Service-Sour Liquid and Vapour.					
	0						

Branch Table as per API RP 14E

Run Pipe	≤ 1	1-1.5	2	3	4	6	8	10	12	14	16	18	20	24	30
≤ 1	T														
1-1.5	T	T													
2	*	*	T												
3	*	*	T	T											
4	*	*	T	T	T										
6	*	*	W	T	T	T									
8	*	*	W	W	T	T	T								
10	*	*	W	W	W	T	T	T							
12	*	*	W	W	W	T	T	T	T						
14	*	*	W	W	W	W	T	T	T	T					
16	*	*	W	W	W	W	T	T	T	T	T				
18	*	*	W	W	W	W	W	T	T	T	T	T			
20	*	*	W	W	W	W	W	T	T	T	T	T	T		
24	*	*	W	W	W	W	W	W	T	T	T	T	T	T	
30	*	*	W	W	W	W	W	W	W	W	T	T	T	T	T

LEGEND	
*	Sockolet
W	Weldolet
T	TEE

	Branch Pipe														
Valve Data															
Size(in)	0.5	0.75	1	1.5	2	3	4	6	8	10	12	14	16	18	20	22	24
Gate Valve																	
TAG	VG 133,SW				VG 160,FLANGED												
Rating	# 800				# 600,RF												
Plug Valve																	
TAG																	
Rating																	
Ball Valve																	
TAG	VB 133,SW				VB 167												
Rating	# 800				# 600,RF												
Globe Valve																	
TAG	VGL 133,SW				VGL 160												
Rating	# 800				# 600,RF												
Check Valve																	
TAG	VC 133,SW,Lift Check				VC 160,Swing Check												
Rating	# 800				# 600,RF												
Needle Valve																	
TAG	VN 103,SW																
Rating	# 800																
Butter Fly Valve																	
TAG																	
Rating																	

Notes Releted to Valve and Brach Connection

1. PMS to be read in conjuction with FS 2004 A.
2. Maximum temperature limit for all Ball Valve shall be 121 Degree C

Revision: 2	15.01.16	Issued For Bid	PS	AKM	SJ
Revision	Date	Description	Prepared By	Reviewed By	Approved By

	Offshore Design Section Engineering Services IS0-9001:2000				**PIPING MATERIAL SPECIFICATION**									Sheet No.		**1 of 2**	
					Piping Class			Material		C.A		Spec.No				Revision:3	
					E23		# 900	DSS-NACE		Nil		2004A,Rev 9				Page No.	91
					Design Code: ASME B 31.3 and other applicable Code NACE-MR-01-75/ISO-15156-1/2/3												
					Service: Corrosive HydroCarbon Service-Sour Liquid and Vapour.												
Pipe Data	ASME B 36.19																
Size(in)	0.5	0.75	1	1.5	2	3	4	6	8	10	12	14	16	18	20	22	24
O.D.mm	21.3	26.7	33.4	48.3	60.3	88.9	114.3	168.3	219.1	273.1	323.9	355.6	406.4	457.2	508	558.8	609.6
Sch.	40s	40s	80s	80s	80s	40s	40s	40s	60	80s	60	60	80	60	80	80	80
WTmm	2.77	2.87	4.55	5.08	5.54	5.49	6.02	7.11	10.31	12.7	14.27	15.09	21.44	19.05	26.19	28.57	30.96
M.T (%)	12.5	12.5	12.5	12.5	12.5	12.5	12.5	12.5	12.5	12.5	12.5	12.5	12.5	12.5	12.5	12.5	12.5
TYPE	Seamless									Welded (Longitudinally) with 100% radiography							
MOC	ASTM A 790 Gr. S 32205									ASTM A 928 Class 1,Gr. 32205 (Note-9,10,11)							
Ends	PE				BE												
Fittings Data																	
Size(in)	0.5	0.75	1	1.5	2	3	4	6	8	10	12	14	16	18	20	22	24
TYPE	Socket Weld				Butt Weld												
Rating	# 3000		# 6000		80s	40s	40s	40s	60	80s	60	60	80	60	80	80	80
MOC	ASTM A 182 Gr. F60				ASTM A 815 Gr.WP-S U.N.S 32205					ASTM A 815 Gr.WP-WX U.N.S 32205							
Elbow	ASMEB16.11				ASME B 16.9					ASME B 16.9							
Tee	ASMEB16.11				ASME B 16.9					ASME B 16.9							
Red.	ASMEB16.11				ASME B 16.9					ASME B 16.9							
Cap	ASMEB16.11				ASME B 16.9					ASME B 16.9							
Coupl	ASMEB16.11				ASME B 16.9					ASME B 16.9							
Plug	ASMEB16.11				ASME B 16.9					ASME B 16.9							
Union																	
Elbowlet	MSS SP 97,ASTM A 182 Gr. F60				MSS SP 97,ASTM A 182 Gr. F60					MSS SP 97,ASTM A 182 Gr. F60							
Sockolet	MSS SP 97,ASTM A 182 Gr. F60				MSS SP 97,ASTM A 182 Gr. F60					MSS SP 97,ASTM A 182 Gr. F60							
Weldolet	MSS SP 97,ASTM A 182 Gr. F60				MSS SP 97,ASTM A 182 Gr. F60					MSS SP 97,ASTM A 182 Gr. F60							
Nipple	MSS SP 97,Same as pipe				MOC Same as pipe					MSS SP 97,ASTM A 182 Gr. F60							
Swage	MSS SP 95,Same as pipe				MSS SP 95, MOC Same as pipe					MSS SP 97,ASTM A 182 Gr. F60							
Flange																	
Size(in)	0.5	0.75	1	1.5	2	3	4	6	8	10	12	14	16	18	20	22	24
TYPE	SW				WN												
MOC	ASTM A 182 Gr. F60				ASTM A 182 Gr. F60												
FACE	RTJ-Note 7				RTJ, Note 7												
STD.	ASME B 16.5				ASME B 16.5, But welding ends as per ASME B 16.25												
Spectacle Blind/Spacer Blinds																	
Size(in)	0.5	0.75	1	1.5	2	3	4	6	8	10	12	14	16	18	20	22	24
MOC	ASTM A 182 Gr. F60																
Spectacle	ASME B 16.48				ASME B 16.48							Spacer and blind as per ASME B 16.48					
Mechanical Joints																	
Stud Bolts	ASTM A 453 Gr. 660 CL A																
Hex Nuts	ASTM A 453 Gr. 660 CL A																
Gasket	ASME B 16.20,OCT ring of UNS S 32205 with Max. Hardness of 22 HRC																

Pressure-Temperature Rating				Maximum Hydrostatic Pressure	
Temp.,Deg F	Pressure, PSI	Temp,Deg C	Pressure, Kg/cm2	Pressure, psig	Pres.,Kg/cm2g
60 to 100	2250	16 to 38	158.2	3375 psig	237.3 Kg/cm2
200	2160	93	151.9	Limited by Flange considereing flange as the weakest joint in piping system	
250	2077.5	121	146.1		

Notes Releted to Pipe,Fittings,Flanges,Gasket and Stud Bolts -Nuts

1. Welded fittings shall be 100% radiographed.
2. Spectacle blinds and spacer sizes and rating that are not available in ASME B 16.48 shall be as per manufacturer standard. Design shall be submitted to company for review and approval.
3. Two jackscrew, 180 degree apart shall be provided in one of the flanges for all orifice flange and WNRTJ flanges above 3" size and specified spectacle blind.
4. All pipe thread shall be as per ASME B 1.20.1
5. PMS to be read in conjuction with FS 2004 A.
6. Gasket Contact Surface shall have maximum roughness of 63AARH
7. RTJ groove hardness shall be 24 -25 HRC
8. Octagonal (OCT) ring shall be of UNS S 32205.
9. Material shall comply heat treatment requirement of NACE MR 01 75/ISO-15156-3 inadditon to the requirement of this material standard.
10. Allowable stress considered for this material shall be based on testing and actual evaluation of allowable stress of the material within the temperature range for which this material is to be used..
11. Thickness indicated is for referance only. To be finalized based on Note- 10 above.
12. To use Schedule 80 for sizes less than 1/1/2" for threaded pipe and fittings.
13. Weld Joint Factor for welded pipe shall be as per ASME B 31.3

Offshore Design Section Engineering Services IS0-9001:2000	**PIPING MATERIAL SPECIFICATION**				Sheet No.	**2 of 2**	
	Piping Class		Material	C.A	Spec.No	Revision:3	
	E23	# 900	DSS-NACE	Nil	2004A,Rev 9	Page No.	92
	Design Code: ASME B 31.3 and other applicable Code NACE-MR-01-75/ISO-15156-1/2/3						
	Service:	Corrosive HydroCarbon Service-Sour Liquid and Vapour.					
	0						

Branch Table as per API RP 14E

Run Pipe \ Branch Pipe	≤ 1	1-1.5	2	3	4	6	8	10	12	14	16	18	20	24	30
≤ 1	T														
1-1.5	T	T													
2	*	*	T												
3	*	*	T	T											
4	*	*	T	T	T										
6	*	*	W	T	T	T									
8	*	*	W	W	T	T	T								
10	*	*	W	W	W	T	T	T							
12	*	*	W	W	W	T	T	T	T						
14	*	*	W	W	W	W	T	T	T	T					
16	*	*	W	W	W	W	T	T	T	T	T				
18	*	*	W	W	W	W	W	T	T	T	T	T			
20	*	*	W	W	W	W	W	T	T	T	T	T	T		
24	*	*	W	W	W	W	W	W	T	T	T	T	T	T	
30	*	*	W	W	W	W	W	W	W	W	T	T	T	T	T

LEGEND	
*	Sockolet
W	Weldolet
T	TEE

Valve Data

Size(in)	0.5	0.75	1	1.5	2	3	4	6	8	10	12	14	16	18	20	22	24
Gate Valve																	
TAG	VG 134,SW				VG 161,FLANGED												
Rating	# 1500				# 900,RTJ												
Plug Valve																	
TAG																	
Rating																	
Ball Valve																	
TAG	Use VG 134,SW				VB 168												
Rating	# 1500				# 900,RTJ												
Globe Valve																	
TAG	VGL 134,SW				VGL 161												
Rating	# 1500				# 900,RTJ												
Check Valve																	
TAG	VC 134,SW,Lift Check				VC 161,Swing Check												
Rating	# 1500				# 900,RTJ												
Needle Valve																	
TAG	VN 104,SW																
Rating	# 1500																
Butter Fly Valve																	
TAG																	
Rating																	

Notes Releted to Valve and Brach Connection

1. PMS to be read in conjuction with FS 2004 A.
2. Maximum temperature limit for all Ball Valve shall be 121 Degree C

Revision	Date	Description	Prepared By	Reviewed By	Approved By
Revision:3	15.01.16	Issued For Bid	PS	AKM	SJ

	Offshore Design Section Engineering Services IS0-9001:2000				**PIPING MATERIAL SPECIFICATION**									Sheet No.		**1 of 2**	
					Piping Class			Material		C.A		Spec.No				Revision:0	
					F23		# 1500	DSS-NACE		Nil		2004A,Rev 9				Page No.	93
					Design Code: ASME B 31.3 and other applicable Code NACE-MR-01-75/ISO-15156-1/2/3												
					Service: Corrosive HydroCarbon Service-Sour Liquid and Vapour.												
Pipe Data	ASME B 36.19																
Size(in)	0.5	0.75	1	1.5	2	3	4	6	8	10	12	14	16	18	20	22	24
O.D.mm	21.3	26.7	33.4	48.3	60.3	88.9	114.3	168.3	219.1	273.1	323.9	355.6	406.4	457.2	508	558.8	609.6
Sch.	80s	80s	80s	160	80s	80s	80s	120	120	120	120	120	120	120	120	120	120
WTmm	3.73	3.91	4.55	7.14	5.54	7.62	8.56	14.27	18.26	21.44	25.4	27.7	30.96	34.92	38.1	41.27	46.02
M.T (%)	12.5	12.5	12.5	12.5	12.5	12.5	12.5	12.5	12.5	12.5	12.5	12.5	12.5	12.5	12.5	12.5	12.5
TYPE	Seamless									Welded (Longitudinally) with 100% radiography							
MOC	ASTM A 790 Gr. S 32205									ASTM A 928 Class 1,Gr. 32205 (Note-9,10,11)							
Ends	PE				BE												
Fittings Data																	
Size(in)	0.5	0.75	1	1.5	2	3	4	6	8	10	12	14	16	18	20	22	24
TYPE	Socket Weld				Butt Weld												
Rating	# 3000			# 6000	80s	80s	80s	120	120	120	120	120	120	120	120	120	120
MOC	ASTM A 182 Gr. F60				ASTM A 815 Gr.WP-S U.N.S 32205					ASTM A 815 Gr.WP-WX U.N.S 32205							
Elbow	ASMEB16.11				ASME B 16.9					ASME B 16.9							
Tee	ASMEB16.11				ASME B 16.9					ASME B 16.9							
Red.	ASMEB16.11				ASME B 16.9					ASME B 16.9							
Cap	ASMEB16.11				ASME B 16.9					ASME B 16.9							
Coupl	ASMEB16.11				ASME B 16.9					ASME B 16.9							
Plug	ASMEB16.11				ASME B 16.9					ASME B 16.9							
Union																	
Elbowlet	MSS SP 97,ASTM A 182 Gr. F60				MSS SP 97,ASTM A 182 Gr. F60					MSS SP 97,ASTM A 182 Gr. F60							
Sockolet	MSS SP 97,ASTM A 182 Gr. F60				MSS SP 97,ASTM A 182 Gr. F60					MSS SP 97,ASTM A 182 Gr. F60							
Weldolet	MSS SP 97,ASTM A 182 Gr. F60				MSS SP 97,ASTM A 182 Gr. F60					MSS SP 97,ASTM A 182 Gr. F60							
Nipple	MSS SP 97,Same as pipe				MOC Same as pipe					MSS SP 97,ASTM A 182 Gr. F60							
Swage	MSS SP 95,Same as pipe				MSS SP 95, MOC Same as pipe					MSS SP 97,ASTM A 182 Gr. F60							
Flange																	
Size(in)	0.5	0.75	1	1.5	2	3	4	6	8	10	12	14	16	18	20	22	24
TYPE	SW				WN												
MOC	ASTM A 182 Gr. F60				ASTM A 182 Gr. F60												
FACE	RTJ-Note 7				RTJ, Note 7												
STD.	ASME B 16.5				ASME B 16.5, But welding ends as per ASME B 16.25												
Spectacle Blind/Spacer Blinds																	
Size(in)	0.5	0.75	1	1.5	2	3	4	6	8	10	12	14	16	18	20	22	24
MOC	ASTM A 182 Gr. F60																
Spectacle	ASME B 16.48				ASME B 16.48							Spacer and blind as per ASME B 16.48					
Mechanical Joints																	
Stud Bolts	ASTM A 453 Gr. 660 CL A																
Hex Nuts	ASTM A 453 Gr. 660 CL A																
Gasket	ASME B 16.20,OCT ring of UNS S 32205 with Max. Hardness of 22 HRC																

Pressure-Temperature Rating				Maximum Hydrostatic Pressure	
Temp.,Deg F	Pressure, PSI	Temp,Deg C	Pressure, Kg/cm2	Pressure, psig	Pres.,Kg/cm2g
60 to 100	3750.7	16 to 38	263.7	5626.8 psig	395.6 Kg/cm2
122	3750.7	50	263.7	Limited by Flange considereing flange as the weakest joint in piping system	
212	3673.9	100	258.3		
302	3329.7	150	234.1		

Notes Releted to Pipe,Fittings,Flanges,Gasket and Stud Bolts -Nuts

1. Welded fittings shall be 100% radiographed.
2. Spectacle blinds and spacer sizes and rating that are not available in ASME B 16.48 shall be as per manufacturer standard. Design shall be submitted to company for review and approval.
3. Two jackscrew, 180 degree apart shall be provided in one of the flanges for all orifice flange and WNRTJ flanges above 3" size and specified spectacle blind.
4. All pipe thread shall be as per ASME B 1.20.1
5. PMS to be read in conjuction with FS 2004 A.
6. Gasket Contact Surface shall have maximum roughness of 63AARH
7. RTJ groove hardness shall be 24 -25 HRC
8. Octagonal (OCT) ring shall be of UNS S 32205.
9. Material shall comply heat treatment requirement of NACE MR 01 75/ISO-15156-3 inadditon to the requirement of this material standard.
10. Allowable stress considered for this material shall be based on testing and actual evaluation of allowable stress of the material within the temperature range for which this material is to be used..
11. Thickness indicated is for referance only. To be finalized based on Note- 10 above.
12. To use Schedule 80 for sizes less than 1/1/2" for threaded pipe and fittings.
13. Weld Joint Factor for welded pipe shall be as per ASME B 31.3

Offshore Design Section Engineering Services IS0-9001:2000	PIPING MATERIAL SPECIFICATION				Sheet No.	2 of 2
	Piping Class		Material	C.A	Spec.No	Revision:0
	F23	# 1500	DSS-NACE	Nil	2004A,Rev 9	Page No. 94
	Design Code: ASME B 31.3 and other applicable Code NACE-MR-01-75/ISO-15156-1/2/3					
	Service:	Corrosive HydroCarbon Service-Sour Liquid and Vapour.				
	0					

Branch Table as per API RP 14E

Run Pipe \ Branch Pipe	≤ 1	1-1.5	2	3	4	6	8	10	12	14	16	18	20	24	30
≤ 1	T														
1-1.5	T	T													
2	*	*	T												
3	*	*	T	T											
4	*	*	T	T	T										
6	*	*	W	T	T	T									
8	*	*	W	W	T	T	T								
10	*	*	W	W	W	T	T	T							
12	*	*	W	W	W	T	T	T	T						
14	*	*	W	W	W	W	T	T	T	T					
16	*	*	W	W	W	W	T	T	T	T	T				
18	*	*	W	W	W	W	W	T	T	T	T	T			
20	*	*	W	W	W	W	W	T	T	T	T	T	T		
24	*	*	W	W	W	W	W	W	T	T	T	T	T	T	
30	*	*	W	W	W	W	W	W	W	W	T	T	T	T	T

LEGEND	
*	Sockolet
W	Weldolet
T	TEE

Valve Data

Size(in)	0.5	0.75	1	1.5	2	3	4	6	8	10	12	14	16	18	20	22	24
Gate Valve																	
TAG	VG 144,SW				VG 171,FLANGED												
Rating	# 2500				#1500,RTJ												
Plug Valve																	
TAG																	
Rating																	
Ball Valve																	
TAG	Use VG 144,SW				VB 178												
Rating	# 2500				# 1500,RTJ												
Globe Valve																	
TAG	VGL 144,SW				VGL 171												
Rating	# 2500				# 1500,RTJ												
Check Valve																	
TAG	VC 144,SW,Lift Check				VC 171,Swing Check												
Rating	# 2500				# 1500,RTJ												
Needle Valve																	
TAG	VN 204,SW																
Rating	# 2500																
Butter Fly Valve																	
TAG																	
Rating																	

Notes Releted to Valve and Brach Connection

1. PMS to be read in conjuction with FS 2004 A.
2. Maximum temperature limit for all Ball Valve shall be 121 Degree C

Revision	Date	Description	Prepared By	Reviewed By	Approved By
Revision:0	15.01.16	Issued For Bid	PS	AKM	SJ

Offshore Design Section Engineering Services IS0-9001:2000	PIPING MATERIAL SPECIFICATION				Sheet No.	1 of 2
	Piping Class	Material	C.A	Spec.No	Revision:0	
	G23 # 2500	DSS-NACE	Nil	2004A,Rev 9	Page No.	95
	Design Code: ASME B 31.3 and other applicable Code NACE-MR-01-75/ISO-15156-1/2/3					
	Service: Corrosive HydroCarbon Service-Sour Liquid and Vapour.					

Pipe Data	ASME B 36.19																
Size(in)	0.5	0.75	1	1.5	2	3	4	6	8	10	12	14	16	18	20	22	24
O.D.mm	21.3	26.7	33.4	48.3	60.3	88.9	114.3	168.3	219.1	273.1	323.9	355.6	406.4	457.2	508	558.8	609.6
Sch.	160	160	160	XXS	160	160	160	XXS	160	160	160	160	160	160	160	160	160
WTmm	4.77	5.56	6.35	10.16	8.74	11.12	13.49	21.95	23.01	28.57	33.32	35.71	40.49	45.24	50.01	53.97	59.54
M.T (%)	12.5	12.5	12.5	12.5	12.5	12.5	12.5	12.5	5.0	4.0	3.0	2.0	2.0	2.0	2.0	2.0	2.0
TYPE	Seamless									Welded (Longitudinally) with 100% radiography							
MOC	ASTM A 790 Gr. S 32205									ASTM A 928 Class 1,Gr. 32205 (Note-9,10,11)							
Ends	PE				BE												
Fittings Data																	
Size(in)	0.5	0.75	1	1.5	2	3	4	6	8	10	12	14	16	18	20	22	24
TYPE	Socket Weld				Butt Weld												
Rating	# 6000			# 9000	160	160	160	XXS	160	160	160	160	160	160	160	160	160
MOC	ASTM A 182 Gr. F60				ASTM A 815 Gr.WP-S U.N.S 32205					ASTM A 815 Gr.WP-WX U.N.S 32205							
Elbow	ASMEB16.11				ASME B 16.9					ASME B 16.9							
Tee	ASMEB16.11				ASME B 16.9					ASME B 16.9							
Red.	ASMEB16.11				ASME B 16.9					ASME B 16.9							
Cap	ASMEB16.11				ASME B 16.9					ASME B 16.9							
Coupl	ASMEB16.11				ASME B 16.9					ASME B 16.9							
Plug	ASMEB16.11				ASME B 16.9					ASME B 16.9							
Union																	
Elbowlet	MSS SP 97,ASTM A 182 Gr. F60				MSS SP 97,ASTM A 182 Gr. F60					MSS SP 97,ASTM A 182 Gr. F60							
Sockolet	MSS SP 97,ASTM A 182 Gr. F60				MSS SP 97,ASTM A 182 Gr. F60					MSS SP 97,ASTM A 182 Gr. F60							
Weldolet	MSS SP 97,ASTM A 182 Gr. F60				MSS SP 97,ASTM A 182 Gr. F60					MSS SP 97,ASTM A 182 Gr. F60							
Nipple	MSS SP 97,Same as pipe				MOC Same as pipe					MSS SP 97,ASTM A 182 Gr. F60							
Swage	MSS SP 95,Same as pipe				MSS SP 95, MOC Same as pipe					MSS SP 97,ASTM A 182 Gr. F60							
Flange																	
Size(in)	0.5	0.75	1	1.5	2	3	4	6	8	10	12	14	16	18	20	22	24
TYPE	SW				WN												
MOC	ASTM A 182 Gr. F60				ASTM A 182 Gr. F60												
FACE	RTJ-Note 7				RTJ, Note 7												
STD.	ASME B 16.5				ASME B 16.5, But welding ends as per ASME B 16.25												
Spectacle Blind/Spacer Blinds																	
Size(in)	0.5	0.75	1	1.5	2	3	4	6	8	10	12	14	16	18	20	22	24
MOC	ASTM A 182 Gr. F60																
Spectacle	ASME B 16.48				ASME B 16.48							Spacer and blind as per ASME B 16.48					
Mechanical Joints																	
Stud Bolts	ASTM A 453 Gr. 660 CL A																
Hex Nuts	ASTM A 453 Gr. 660 CL A																
Gasket	ASME B 16.20,OCT ring of UNS S 32205 with Max. Hardness of 22 HRC																

Pressure-Temperature Rating				Maximum Hydrostatic Pressure	
Temp.,Deg F	Pressure, PSI	Temp,Deg C	Pressure, Kg/cm2	Pressure, psig	Pres.,Kg/cm2g
60 to 100	6249.7	16 to 38	439.4	9374.6 psig	659.1 Kg/cm2
122	6249.7	50	439.4	Limited by Flange considereing flange as the weakest joint in piping system	
212	6123.1	100	430.5		
302	5549.9	150	390.2		

Notes Releted to Pipe,Fittings,Flanges,Gasket and Stud Bolts -Nuts

1. Welded fittings shall be 100% radiographed.
2. Spectacle blinds and spacer sizes and rating that are not available in ASME B 16.48 shall be as per manufacturer standard. Design shall be submitted to company for review and approval.
3. Two jackscrew, 180 degree apart shall be provided in one of the flanges for all orifice flange and WNRTJ flanges above 3" size and specified spectacle blind.
4. All pipe thread shall be as per ASME B 1.20.1
5. PMS to be read in conjuction with FS 2004 A.
6. Gasket Contact Surface shall have maximum roughness of 63AARH
7. RTJ groove hardness shall be 24 -25 HRC
8. Octagonal (OCT) ring shall be of UNS S 32205.
9. Material shall comply heat treatment requirement of NACE MR 01 75/ISO-15156-3 inadditon to the requirement of this material standard.
10. Allowable stress considered for this material shall be based on testing and actual evaluation of allowable stress of the material within the temperature range for which this material is to be used..
11. Thickness indicated is for referance only. To be finalized based on Note- 10 above.
12. To use Schedule 80 for sizes less than 1/1/2" for threaded pipe and fittings.
13. Weld Joint Factor for welded pipe shall be as per ASME B 31.3

Offshore Design Section Engineering Services IS0-9001:2000	**PIPING MATERIAL SPECIFICATION**				Sheet No.	**2 of 2**
	Piping Class		Material	C.A	Spec.No	Revision:0
	G23	# 2500	DSS-NACE	Nil	2004A,Rev 9	Page No. 96
	Design Code: ASME B 31.3 and other applicable Code NACE-MR-01-75/ISO-15156-1/2/3					
	Service:	Corrosive HydroCarbon Service-Sour Liquid and Vapour.				
	0					

Branch Table as per API RP 14E

Run Pipe \ Branch Pipe	≤ 1	1-1.5	2	3	4	6	8	10	12	14	16	18	20	24	30
≤ 1	T														
1-1.5	T	T													
2	*	*	T												
3	*	*	T	T											
4	*	*	T	T	T										
6	*	*	W	T	T	T									
8	*	*	W	W	T	T	T								
10	*	*	W	W	W	T	T	T							
12	*	*	W	W	W	T	T	T	T						
14	*	*	W	W	W	W	T	T	T	T					
16	*	*	W	W	W	W	T	T	T	T	T				
18	*	*	W	W	W	W	W	T	T	T	T	T			
20	*	*	W	W	W	W	W	T	T	T	T	T	T		
24	*	*	W	W	W	W	W	W	T	T	T	T	T	T	
30	*	*	W	W	W	W	W	W	W	W	T	T	T	T	T

LEGEND	
*	Sockolet
W	Weldolet
T	TEE

Valve Data

Size(in)	0.5	0.75	1	1.5	2	3	4	6	8	10	12	14	16	18	20	22	24
Gate Valve																	
TAG	VG 144,SW				VG 381,FLANGED												
Rating	# 2500				#2500,RTJ												
Plug Valve																	
TAG																	
Rating																	
Ball Valve																	
TAG	Use VG 144,SW				VB 388												
Rating	# 2500				# 2500,RTJ												
Globe Valve																	
TAG	VGL 144,SW				VGL 381												
Rating	# 2500				# 2500,RTJ												
Check Valve																	
TAG	VC 144,SW,Lift Check				VC 381,Swing Check												
Rating	# 2500				# 2500,RTJ												
Needle Valve																	
TAG	VN 204,SW																
Rating	# 2500																
Butter Fly Valve																	
TAG																	
Rating																	

Notes Releted to Valve and Brach Connection

1. PMS to be read in conjuction with FS 2004 A.
2. Maximum temperature limit for all Ball Valve shall be 121 Degree C

Revision	Date	Description	Prepared By	Reviewed By	Approved By
Revision:0	15.01.16	Issued For Bid	PS	AKM	SJ

Offshore Design Section Engineering Services IS0-9001:2000	PIPING MATERIAL SPECIFICATION				Sheet No.	1 of 2
	Piping Class		Material	C.A	Spec.No	Revision: 0
	A15	# 150	Incoloy 825	Nil	2004A,Rev 9	Page No. 97
	Code:ASME B 31.3 and other applicable Code NACE-MR-01-75/ISO-15156-1/2/3					
	Service:	Corrosive HydroCarbon Service-Sour Liquid and Vapour.				

Pipe Data	ASME B 36.10																
Size(in)	0.5	0.75	1	1.5	2	3	4	6	8	10	12	14	16	18	20	22	24
O.D.mm	21.3	26.7	33.4	48.3	60.3	88.9	114.3	168.3	219.1	273.1	323.9	355.6	406.4	457.2	508	558.8	609.6
Sch.	40s	40s	40s	40s	10s	10s	10s	10s									
WTmm	2.77	2.87	3.38	3.68	2.77	3.05	3.05	3.40									
M.T (%)	12.5	12.5	12.5	12.5	12.5	12.5	12.5	12.5	12.5	12.5	12.5	5.0	5.0	5.0	5.0	5.0	5.0
TYPE	Seamless											Welded pipe from clad plate. Note -5					
MOC	ASTM B 423 UNSN08825 Cold finnished Annealed								ASTM B 423 UNSN8825			API 5L Gr.B Pipe with Incoly cladding, Note 7					
Ends	PE				BE												
Fittings Data																	
Size(in)	0.5	0.75	1	1.5	2	3	4	6	8	10	12	14	16	18	20	22	24
TYPE	Socket Weld				Butt Weld												
Rating	# 3000				10s	10s	10s	10s									
MOC	ASTM B 564 UNS N08825				ASTM B 366 WP NIC MC S UNS N08825							ASTM A 234 WPB with cladding min. 3mm. Note 8					
Elbow	ASMEB16.11				ASME B 16.9							ASME B 16.9					
Tee	ASMEB16.11				ASME B 16.9							ASME B 16.9					
Red.	ASMEB16.11				ASME B 16.9							ASME B 16.9					
Cap	ASMEB16.11				ASME B 16.9							ASME B 16.9					
Coupl	ASMEB16.11				ASME B 16.9							ASME B 16.9					
Plug	ASMEB16.11				ASME B 16.9							ASME B 16.9					
Union																	
Elbowlet	MSS SP 97,B 564 UNS N08825				MSS SP 97,ASTM B 564 UNS N08825							MSSSP 97,ASTMA105 ,cladding min.3mm.Note8					
Sockolet	MSS SP 97,B 564 UNS N08825				MSS SP 97,ASTM B 564 UNS N08825							MSSSP 97,ASTMA105 ,cladding min.3mm.Note8					
Weldolet	MSS SP 97,B 564 UNS N08825				MSS SP 97,ASTM B 564 UNS N08825							MSSSP 97,ASTMA105 ,cladding min.3mm.Note8					
Nipple	MSS SP 97,Same as pipe				MOC Same as pipe							MOC Same as pipe					
Swage	MSS SP 95,Same as pipe				MSS SP 95, MOC Same as pipe							MSS SP 95, MOC Same as pipe					
Flange																	
Size(in)	0.5	0.75	1	1.5	2	3	4	6	8	10	12	14	16	18	20	22	24
TYPE	SW				WN							WN					
MOC	ASTM B 564 UNS N08825				ASTM B 564 UNS N08825							MSSSP 97,ASTMA105 ,cladding min.3mm.Note8					
FACE	RF,Serrated Finnished				RF,Serrated Finnished												
STD.	ASME B 16.5				ASME B 16.5, But welding ends as per ASME B 16.25												
Spectacle Blind/Spacer Blinds																	
Size(in)	0.5	0.75	1	1.5	2	3	4	6	8	10	12	14	16	18	20	22	24
MOC	ASTM B 564 UNS N08825																
Spectacle	ASME B 16.48				ASME B 16.48							Spacer and blind as per ASME B 16.48					
Mechanical Joints																	
Stud Bolt	ASTM A 453 Gr. 660 CL A																
Hex Nuts	ASTM A 453 Gr. 660 CL A																
Gasket	ASME B 16.20 , 5mm thick Duplex SS Spiral wound gasket with CNAF filler																

Pressure-Temperature Rating				Maximum Hydrostatic Pressure	
Temp.,Deg F	Pressure, PSI	Temp,Deg C	Pressure, Kg/cm2	Pressure, psig	Pres.,Kg/cm2g
(-) 20 to 100	290	(-) 29 to 38	20.3	435psig	31 Kg/cm2
200	260	93	18.3	Limited by Flange considereing flange as the weakest joint in piping system	
300	230	149	16.2		

Notes Releted to Pipe,Fittings,Flanges,Gasket and Stud Bolts -Nuts

1. Spectacle blinds and spacer sizes and rating that are not available in ASME B 16.48 shall be as per manufacturer standard. Design shall be submitted to company for review and approval.
2. Two jackscrew, 180 degree apart shall be provided in one of the flanges for all orifice flange and specified flange and spectacle blind.
3. All pipe thread shall be as per ASME B 1.20.1
4. PMS to be read in conjuction with FS 2004 A.
5. Only the base material thickness shall be considered.
6. Pipe sizes 8" to 12" shall be hotfinnished annealed (Solution annealed), pickled and end shall be bevelled. Allwable stress to be established for the temperature range based on actual evaluation after testing .
7. For sizes 14" and above welded pipe of clad plate with 100% radiography to be used. Cladding of minimum 3mm shall be done with Incoloy 825 or Inconell 625 on API 5L Gr. B pipe.
8. Cladding shall be weld over lay type with Incoly 825 or Inconel 625 of min. 3mm
9. To use Schedule 80 for sizes less than 1/1/2" for threaded pipe and fittings.

Offshore Design Section Engineering Services IS0-9001:2000	PIPING MATERIAL SPECIFICATION				Sheet No.	2 of 2
	Piping Class		Material	C.A	Spec.No	Revision: 0
	A15	# 150	Incoloy 825	Nil	2004A,Rev 9	Page No. 98
	Code:ASME B 31.3 and other applicable Code NACE-MR-01-75/ISO-15156-1/2/3					
	Service:	Corrosive HydroCarbon Service-Sour Liquid and Vapour.				
	0					

Branch Table as per API RP 14E

Run Pipe	≤ 1	1-1.5	2	3	4	6	8	10	12	14	16	18	20	24	30
≤ 1	T														
1-1.5	T	T													
2	*	*	T												
3	*	*	T	T											
4	*	*	T	T	T										
6	*	*	W	T	T	T									
8	*	*	W	W	T	T	T								
10	*	*	W	W	W	T	T	T							
12	*	*	W	W	W	T	T	T	T						
14	*	*	W	W	W	W	T	T	T	T					
16	*	*	W	W	W	W	T	T	T	T	T				
18	*	*	W	W	W	W	W	T	T	T	T	T			
20	*	*	W	W	W	W	W	T	T	T	T	T	T		
24	*	*	W	W	W	W	W	W	T	T	T	T	T	T	
30	*	*	W	W	W	W	W	W	W	W	T	T	T	T	T

LEGEND	
*	Sockolet
W	Weldolet
T	TEE

Branch Pipe

Valve Data

Size(in)	0.5	0.75	1	1.5	2	3	4	6	8	10	12	14	16	18	20	22	24
Gate Valve																	
TAG	VG 105,SW				VG 111,FLANGED												
Rating	# 800				# 150,RF												
Plug Valve																	
TAG																	
Rating																	
Ball Valve																	
TAG	VB 105,SW				VB 111, Flanged												
Rating	# 800				# 150,RF												
Globe Valve																	
TAG	VGL 104,SW				VGL 111,flanged												
Rating	# 800				# 150,RF												
Check Valve																	
TAG	VC 104,SW,Lift Check				VC 111,Swing Check												
Rating	# 800				# 150,RF												
Needle Valve																	
TAG	VN 105,SW																
Rating	# 800																
Butter Fly Valve																	
TAG																	
Rating																	

Notes Releted to Valve and Brach Connection

1. PMS to be read in conjuction with FS 2004 A.
2. Maximum temperature limit for all Ball Valve shall be suitable to maximum temperature of the project.

Revision	Date	Description	Prepared By	Reviewed By	Approved By
Revision: 0	22/7/2009	Issued For Bid	PS	GJ	GRP

	Offshore Design Section Engineering Services IS0-9001:2000				**PIPING MATERIAL SPECIFICATION**									Sheet No.		**1 of 2**	
					Piping Class				Material			C.A	Spec.No			Revision: 0	
					B15				# 300			Nil	2004A,Rev 9			Page No.	99
					Code:ASME B 31.3 and other applicable Code NACE-MR-01-75/ISO-15156-1/2/3												
					Service:	Corrosive HydroCarbon Service-Sour Liquid and Vapour.											
Pipe Data	ASME B 36.10																
Size(in)	0.5	0.75	1	1.5	2	3	4	6	8	10	12	14	16	18	20	22	24
O.D.mm	21.3	26.7	33.4	48.3	60.3	88.9	114.3	168.3	219.1	273.1	323.9	355.6	406.4	457.2	508	558.8	609.6
Sch.	40s	40s	40s	40s	10s	10s	10s	10s									
WTmm	2.77	2.87	3.38	3.68	2.77	3.05	3.05	3.40									
M.T (%)	12.5	12.5	12.5	12.5	12.5	12.5	12.5	12.5	12.5	12.5	12.5	5.0	5.0	5.0	5.0	5.0	5.0
TYPE	Seamless											Welded pipe from clad plate. Note -5					
MOC	ASTM B 423 UNSN08825 Cold finnished Annealed								ASTM B 423 UNSN8825			API 5L Gr.B Pipe with Incoly cladding, Note 7					
Ends	PE				BE												
Fittings Data																	
Size(in)	0.5	0.75	1	1.5	2	3	4	6	8	10	12	14	16	18	20	22	24
TYPE	Socket Weld				Butt Weld												
Rating	# 3000				10s	10s	10s	10s									
MOC	ASTM B 564 UNS N08825				ASTM B 366 WP NIC MC S UNS N08825							ASTM A 234 WPB with cladding min. 3mm. Note 8					
Elbow	ASMEB16.11				ASME B 16.9							ASME B 16.9					
Tee	ASMEB16.11				ASME B 16.9							ASME B 16.9					
Red.	ASMEB16.11				ASME B 16.9							ASME B 16.9					
Cap	ASMEB16.11				ASME B 16.9							ASME B 16.9					
Coupl	ASMEB16.11				ASME B 16.9							ASME B 16.9					
Plug	ASMEB16.11				ASME B 16.9							ASME B 16.9					
Union																	
Elbowlet	MSS SP 97,B 564 UNS N08825				MSS SP 97,ASTM B 564 UNS N08825							MSSSP 97,ASTMA105 ,cladding min.3mm.Note8					
Sockolet	MSS SP 97,B 564 UNS N08825				MSS SP 97,ASTM B 564 UNS N08825							MSSSP 97,ASTMA105 ,cladding min.3mm.Note8					
Weldolet	MSS SP 97,B 564 UNS N08825				MSS SP 97,ASTM B 564 UNS N08825							MSSSP 97,ASTMA105 ,cladding min.3mm.Note8					
Nipple	MSS SP 97,Same as pipe				MOC Same as pipe							MOC Same as pipe					
Swage	MSS SP 95,Same as pipe				MSS SP 95, MOC Same as pipe							MSS SP 95, MOC Same as pipe					
Flange																	
Size(in)	0.5	0.75	1	1.5	2	3	4	6	8	10	12	14	16	18	20	22	24
TYPE	SW				WN							WN					
MOC	ASTM B 564 UNS N08825				ASTM B 564 UNS N08825							MSSSP 97,ASTMA105 ,cladding min.3mm.Note8					
FACE	RF,Smooth Finnished				RF,Smooth Finnished												
STD.	ASME B 16.5				ASME B 16.5, But welding ends as per ASME B 16.25												
Spectacle Blind/Spacer Blinds																	
Size(in)	0.5	0.75	1	1.5	2	3	4	6	8	10	12	14	16	18	20	22	24
MOC	ASTM B 564 UNS N08825																
Spectacle	ASME B 16.48				ASME B 16.48							Spacer and blind as per ASME B 16.48					
Mechanical Joints																	
Stud Bolt	ASTM A 453 Gr. 660 CL A																
Hex Nuts	ASTM A 453 Gr. 660 CL A																
Gasket	ASME B 16.20 , 5mm thick Duplex SS Spiral wound gasket with CNAF filler																

Pressure-Temperature Rating				Maximum Hydrostatic Pressure	
Temp.,Deg F	Pressure, PSI	Temp,Deg C	Pressure, Kg/cm2	Pressure, psig	Pres.,Kg/cm2g
(-) 20 to 100	750	(-) 29 to 38	52.8	1125psig	80 Kg/cm2
200	750	93	52.8	Limited by Flange considereing flange as the weakest joint in piping system	
300	730	149	51.3		

Notes Releted to Pipe,Fittings,Flanges,Gasket and Stud Bolts -Nuts

1. Spectacle blinds and spacer sizes and rating that are not available in ASME B 16.48 shall be as per manufacturer standard. Design shall be submitted to company for review and approval.

2. Two jackscrew, 180 degree apart shall be provided in one of the flanges for all orifice flange and specified flange and spectacle blind.

3. All pipe thread shall be as per ASME B 1.20.1

4. PMS to be read in conjuction with FS 2004 A.

5. Only the base material thickness shall be considered.

6. Pipe sizes 8" to 12" shall be hotfinnished annealed (Solution annealed), pickled and end shall be bevelled. Allwable stress to be established for the temperature range based on actual evaluation after testing .

7. For sizes 14" and above welded pipe of clad plate with 100% radio graphy to be used. Cladding of minimum 3mm shall be done with Incoloy 825 or Inconell 625 on API 5L Gr. B pipe.

8. Cladding shall be weld over lay type with Incoly 825 or Inconel 625 of min. 3mm

9. To use Schedule 80 for sizes less than 1/1/2" for threaded pipe and fittings.

Offshore Design Section Engineering Services IS0-9001:2000	**PIPING MATERIAL SPECIFICATION**				Sheet No.	**2 of 2**
	Piping Class	Material	C.A	Spec.No	Revision: 0	
	B15	# 300	Incoloy 825	Nil	2004A,Rev 9	Page No. 100
	Code:ASME B 31.3 and other applicable Code NACE-MR-01-75/ISO-15156-1/2/3					
	Service:	Corrosive HydroCarbon Service-Sour Liquid and Vapour.				
	0					

Branch Table as per API RP 14E

Run Pipe	Branch Pipe ≤ 1	1-1.5	2	3	4	6	8	10	12	14	16	18	20	24	30
≤ 1	T														
1-1.5	T	T													
2	*	*	T												
3	*	*	T	T											
4	*	*	T	T	T										
6	*	*	W	T	T	T									
8	*	*	W	W	T	T	T								
10	*	*	W	W	W	T	T	T							
12	*	*	W	W	W	T	T	T	T						
14	*	*	W	W	W	W	T	T	T	T					
16	*	*	W	W	W	W	T	T	T	T	T				
18	*	*	W	W	W	W	W	T	T	T	T	T			
20	*	*	W	W	W	W	W	T	T	T	T	T	T		
24	*	*	W	W	W	W	W	W	T	T	T	T	T	T	
30	*	*	W	W	W	W	W	W	W	W	T	T	T	T	T

LEGEND	
*	Sockolet
W	Weldolet
T	TEE

Valve Data

Size(in)	0.5	0.75	1	1.5	2	3	4	6	8	10	12	14	16	18	20	22	24
Gate Valve																	
TAG	VG 105,SW				VG 113,FLANGED												
Rating	# 800				# 300,RF												
Plug Valve																	
TAG																	
Rating																	
Ball Valve																	
TAG	VB 105,SW				VB 113,												
Rating	# 800				# 300,RF												
Globe Valve																	
TAG	VGL 104,SW				VGL 113												
Rating	# 800				# 300,RF												
Check Valve																	
TAG	VC 104,SW,Lift Check				VC 113,Swing Check												
Rating	# 800				# 300,RF												
Needle Valve																	
TAG	VN 105,SW																
Rating	# 800																
Butter Fly Valve																	
TAG																	
Rating																	

Notes Releted to Valve and Brach Connection

1. PMS to be read in conjuction with FS 2004 A.
2. Maximum temperature limit for all Ball Valve shall be suitable to maximum temperature of the project.

Revision	Date	Description	Prepared By	Reviewed By	Approved By
Revision: 0	22/7/2009	Issued For Bid	PS	GJ	GRP

ONGC	Offshore Design Section Engineering Services IS0-9001:2000	**PIPING MATERIAL SPECIFICATION**												Sheet No.		**1 of 2**	
		Piping Class						Material			C.A	Spec.No				Revision:1	
		D15				# 600		Incoloy 825			Nil	2004A,Rev 9				Page No.	101
		Code:ASME B 31.3 and other applicable Code NACE-MR-01-75/ISO-15156-1/2/3															
		Service: Corrosive HydroCarbon Service-Sour Liquid and Vapour.															

Pipe Data	ASME B 36.10																
Size(in)	0.5	0.75	1	1.5	2	3	4	6	8	10	12	14	16	18	20	22	24
O.D.mm	21.3	26.7	33.4	48.3	60.3	88.9	114.3	168.3	219.1	273.1	323.9	355.6	406.4	457.2	508	558.8	609.6
Sch.	40s	40s	40s	80s	10s	30	30	40s									
WTmm	2.77	2.87	3.38	5.08	2.77	4.78	4.78	7.11									
M.T (%)	12.5	12.5	12.5	12.5	12.5	12.5	12.5	12.5	12.5	12.5	12.5	5.0	5.0	5.0	5.0	5.0	5.0
TYPE	Seamless											Welded pipe from clad plate. Note -5					
MOC	ASTM B 423 UNSN08825 Cold finnished Annealed								ASTM B 423 UNSN8825			API 5L Gr.B Pipe with Incoly cladding, Note 7					
Ends	PE				BE												
Fittings Data																	
Size(in)	0.5	0.75	1	1.5	2	3	4	6	8	10	12	14	16	18	20	22	24
TYPE	Socket Weld				Butt Weld												
Rating	# 3000				10s	30	30	40s									
MOC	ASTM B 564 UNS N08825				ASTM B 366 WP NIC MC S UNS N08825							ASTM A 234 WPB with cladding min. 3mm. Note 8					
Elbow	ASMEB16.11				ASME B 16.9							ASME B 16.9					
Tee	ASMEB16.11				ASME B 16.9							ASME B 16.9					
Red.	ASMEB16.11				ASME B 16.9							ASME B 16.9					
Cap	ASMEB16.11				ASME B 16.9							ASME B 16.9					
Coupl	ASMEB16.11				ASME B 16.9							ASME B 16.9					
Plug	ASMEB16.11				ASME B 16.9							ASME B 16.9					
Union																	
Elbowlet	MSS SP 97,B 564 UNS N08825				MSS SP 97,ASTM B 564 UNS N08825							MSSSP 97,ASTMA105 ,cladding min.3mm.Note8					
Sockolet	MSS SP 97,B 564 UNS N08825				MSS SP 97,ASTM B 564 UNS N08825							MSSSP 97,ASTMA105 ,cladding min.3mm.Note8					
Weldolet	MSS SP 97,B 564 UNS N08825				MSS SP 97,ASTM B 564 UNS N08825							MSSSP 97,ASTMA105 ,cladding min.3mm.Note8					
Nipple	MSS SP 97,Same as pipe				MOC Same as pipe							MOC Same as pipe					
Swage	MSS SP 95,Same as pipe				MSS SP 95, MOC Same as pipe							MSS SP 95, MOC Same as pipe					
Flange																	
Size(in)	0.5	0.75	1	1.5	2	3	4	6	8	10	12	14	16	18	20	22	24
TYPE	SW				WN							WN					
MOC	ASTM B 564 UNS N08825				ASTM B 564 UNS N08825							MSSSP 97,ASTMA105 ,cladding min.3mm.Note8					
FACE	RF,Smooth Finnished				RF,Smooth Finnished												
STD.	ASME B 16.5				ASME B 16.5, But welding ends as per ASME B 16.25												
Spectacle Blind/Spacer Blinds																	
Size(in)	0.5	0.75	1	1.5	2	3	4	6	8	10	12	14	16	18	20	22	24
MOC	ASTM B 564 UNS N08825																
Spectacle	ASME B 16.48				ASME B 16.48							Spacer and blind as per ASME B 16.48					
Mechanical Joints																	
Stud Bolts	ASTM A 453 Gr. 660 CL A																
Hex Nuts	ASTM A 453 Gr. 660 CL A																
Gasket	ASME B 16.20 , 5mm thick Duplex SS Spiral wound gasket with CNAF filler																

Pressure-Temperature Rating				Maximum Hydrostatic Pressure	
Temp.,Deg F	Pressure, PSI	Temp,Deg C	Pressure, Kg/cm2	Pressure, psig	Pres.,Kg/cm2g
(-) 20 to 100	1500	(-) 29 to 38	105.4	2250psig	158.2 Kg/cm2
200	1500	93	105.4	Limited by Flange considereing flange as the weakest joint in piping system	
300	1455	149	102.3		

Notes Releted to Pipe,Fittings,Flanges,Gasket and Stud Bolts -Nuts

1. Spectacle blinds and spacer sizes and rating that are not available in ASME B 16.48 shall be as per manufacturer standard. Design shall be submitted to company for review and approval.
2. Two jackscrew, 180 degree apart shall be provided in one of the flanges for all orifice flange and specified flange and spectacle blind.
3. All pipe thread shall be as per ASME B 1.20.1
4. PMS to be read in conjuction with FS 2004 A.
5. Only the base material thickness shall be considered.
6. Pipe sizes 8" to 12" shall be hotfinnished annealed (Solution annealed), pickled and end shall be bevelled. Allwable stress to be established for the temperature range based on actual evaluation after testing .
7. For sizes 14" and above welded pipe of clad plate with 100% radiography to be used. Cladding of minimum 3mm shall be done with Incoloy 825 or Inconell 625 on API 5L Gr. B pipe.
8. Cladding shall be weld over lay type with Incoly 825 or Inconel 625 of min. 3mm
9. To use Schedule 80 for sizes less than 1/1/2" for threaded pipe and fittings.

Offshore Design Section Engineering Services IS0-9001:2000	**PIPING MATERIAL SPECIFICATION**				Sheet No.	**2 of 2**
	Piping Class	Material	C.A	Spec.No	Revision:1	
	D15	# 600	Incoloy 825	Nil	2004A,Rev 9	Page No. 102
	Code:ASME B 31.3 and other applicable Code NACE-MR-01-75/ISO-15156-1/2/3					
	Service:	Corrosive HydroCarbon Service-Sour Liquid and Vapour.				
	0					

Branch Table as per API RP 14E

Run Pipe \ Branch Pipe	≤ 1	1-1.5	2	3	4	6	8	10	12	14	16	18	20	24	30
≤ 1	T														
1-1.5	T	T													
2	*	*	T												
3	*	*	T	T											
4	*	*	T	T	T										
6	*	*	W	T	T	T									
8	*	*	W	W	T	T	T								
10	*	*	W	W	W	T	T	T							
12	*	*	W	W	W	T	T	T	T						
14	*	*	W	W	W	W	T	T	T	T					
16	*	*	W	W	W	W	T	T	T	T	T				
18	*	*	W	W	W	W	W	T	T	T	T	T			
20	*	*	W	W	W	W	W	T	T	T	T	T	T		
24	*	*	W	W	W	W	W	W	T	T	T	T	T	T	
30	*	*	W	W	W	W	W	W	W	W	T	T	T	T	T

LEGEND	
*	Sockolet
W	Weldolet
T	TEE

Valve Data

Size(in)	0.5	0.75	1	1.5	2	3	4	6	8	10	12	14	16	18	20	22	24
Gate Valve																	
TAG	VG 105,SW				VG 115,FLANGED												
Rating	# 800				# 600,RF												
Plug Valve																	
TAG																	
Rating																	
Ball Valve																	
TAG	VB 105,SW				VB 115,												
Rating	# 800				# 600,RF												
Globe Valve																	
TAG	VGL 104,SW				VGL 115												
Rating	# 800				# 600,RF												
Check Valve																	
TAG	VC 104,SW,Lift Check				VC 115,Swing Check												
Rating	# 800				# 600,RF												
Needle Valve																	
TAG	VN 105,SW																
Rating	# 800																
Butter Fly Valve																	
TAG																	
Rating																	

Notes Releted to Valve and Brach Connection

1. PMS to be read in conjuction with FS 2004 A.
2. Maximum temperature limit for all Ball Valve shall be suitable to maximum temperature of the project.

Revision	Date	Description	Prepared By	Reviewed By	Approved By
Revision:1	22/7/2009	Issued For Bid	PS	GJ	GRP

ONGC	Offshore Design Section Engineering Services IS0-9001:2000	**PIPING MATERIAL SPECIFICATION**												Sheet No.	**1 of 2**		
		Piping Class						Material			C.A	Spec.No			Revision: 1		
		E15				# 900		Incoloy 825			Nil	2004A,Rev 9			Page No.	103	
		Code:ASME B 31.3 and other applicable Code NACE-MR-01-75/ISO-15156-1/2/3															
		Service: Corrosive HydroCarbon Service-Sour Liquid and Vapour.															

Pipe Data	ASME B 36.10																
Size(in)	0.5	0.75	1	1.5	2	3	4	6	8	10	12	14	16	18	20	22	24
O.D.mm	21.3	26.7	33.4	48.3	60.3	88.9	114.3	168.3	219.1	273.1	323.9	355.6	406.4	457.2	508	558.8	609.6
Sch.	80s	80s	80s	80s	40s	40s	Std.	80s									
WTmm	3.73	3.91	4.55	5.08	3.91	5.49	6.02	10.97									
M.T (%)	12.5	12.5	12.5	12.5	12.5	12.5	12.5	12.5	12.5	12.5	12.5	5.0	5.0	5.0	5.0	5.0	5.0
TYPE	Seamless											Welded pipe from clad plate. Note -5					
MOC	ASTM B 423 UNSN08825 Cold finnished Annealed								ASTM B 423 UNSN8825			API 5L Gr.B Pipe with Incoly cladding, Note 7					
Ends	PE				BE												
Fittings Data																	
Size(in)	0.5	0.75	1	1.5	2	3	4	6	8	10	12	14	16	18	20	22	24
TYPE	Socket Weld				Butt Weld												
Rating	# 9000				40s	40s	Std.	80s									
MOC	ASTM B 564 UNS N08825				ASTM B 366 WP NIC MC S UNS N08825							ASTM A 234 WPB with cladding min. 3mm. Note 8					
Elbow	ASMEB16.11				ASME B 16.9							ASME B 16.9					
Tee	ASMEB16.11				ASME B 16.9							ASME B 16.9					
Red.	ASMEB16.11				ASME B 16.9							ASME B 16.9					
Cap	ASMEB16.11				ASME B 16.9							ASME B 16.9					
Coupl	ASMEB16.11				ASME B 16.9							ASME B 16.9					
Plug	ASMEB16.11				ASME B 16.9							ASME B 16.9					
Union																	
Elbowlet	MSS SP 97,B 564 UNS N08825				MSS SP 97,ASTM B 564 UNS N08825							MSSSP 97,ASTMA105 ,cladding min.3mm.Note8					
Sockolet	MSS SP 97,B 564 UNS N08825				MSS SP 97,ASTM B 564 UNS N08825							MSSSP 97,ASTMA105 ,cladding min.3mm.Note8					
Weldolet	MSS SP 97,B 564 UNS N08825				MSS SP 97,ASTM B 564 UNS N08825							MSSSP 97,ASTMA105 ,cladding min.3mm.Note8					
Nipple	MSS SP 97,Same as pipe				MOC Same as pipe							MOC Same as pipe					
Swage	MSS SP 95,Same as pipe				MSS SP 95, MOC Same as pipe							MSS SP 95, MOC Same as pipe					
Flange																	
Size(in)	0.5	0.75	1	1.5	2	3	4	6	8	10	12	14	16	18	20	22	24
TYPE	SW				WN									WN			
MOC	ASTM B 564 UNS N08825				ASTM B 564 UNS N08825							MSSSP 97,ASTMA105 ,cladding min.3mm.Note8					
FACE	RTJ-Note 8				RTJ-Note 8												
STD.	ASME B 16.5				ASME B 16.5, But welding ends as per ASME B 16.25												
Spectacle Blind/Spacer Blinds																	
Size(in)	0.5	0.75	1	1.5	2	3	4	6	8	10	12	14	16	18	20	22	24
MOC	ASTM B 564 UNS N08825																
Spectacle	ASME B 16.48				ASME B 16.48							Spacer and blind as per ASME B 16.48					
Mechanical Joints																	
Stud Bolts	ASTM A 453 Gr. 660 CL A																
Hex Nuts	ASTM A 453 Gr. 660 CL A																
Gasket	ASME B 16.20,OCT ring of UNS S 32205 with Max. Hardness of 22 HRC. Gasket contact surface roughness max. 63 AARH.																

Pressure-Temperature Rating				Maximum Hydrostatic Pressure	
Temp.,Deg F	Pressure, PSI	Temp,Deg C	Pressure, Kg/cm2	Pressure, psig	Pres.,Kg/cm2g
(-) 20 to 100	2250	(-) 29 to 38	158.1	3375psig	237.2 Kg/cm2
200	2250	93	158.1	Limited by Flange considereing flange as the weakest joint in piping system	
300	2185	149	153.6		

Notes Releted to Pipe,Fittings,Flanges,Gasket and Stud Bolts -Nuts

1. Spectacle blinds and spacer sizes and rating that are not available in ASME B 16.48 shall be as per manufacturer standard. Design shall be submitted to company for review and

2. Two jackscrew, 180 degree apart shall be provided in one of the flanges for all orifice flange and specified flange and spectacle blind.

3. All pipe thread shall be as per ASME B 1.20.1

4. PMS to be read in conjuction with FS 2004 A.

5. Only the base material thickness shall be considered.

6. Pipe sizes 8" to 12" shall be hotfinnished annealed (Solution annealed), pickled and end shall be bevelled. Allwable stress to be established for the temperature range based on actual evaluation after testing .

7. For sizes 14" and above welded pipe of clad plate with 100% radiography shall be used. Cladding of minimum 3mm shall be done with Incoloy 825 or Inconell 625 on API 5L Gr. B pipe.

8. RTJ groove hardness shall be 35 HRC.

9. Cladding shall be weld over lay type with Incoly 825 or Inconel 625 of min. 3mm

Offshore Design Section Engineering Services IS0-9001:2000	PIPING MATERIAL SPECIFICATION				Sheet No.	2 of 2
	Piping Class	Material	C.A	Spec.No	Revision: 1	
	E15 # 900	Incoloy 825	Nil	2004A,Rev 9	Page No.	104
	Code:ASME B 31.3 and other applicable Code NACE-MR-01-75/ISO-15156-1/2/3					
	Service:	Corrosive HydroCarbon Service-Sour Liquid and Vapour.				
	0					

Branch Table as per API RP 14E

Run Pipe	≤ 1	1-1.5	2	3	4	6	8	10	12	14	16	18	20	24	30
≤ 1	T														
1-1.5	T	T													
2	*	*	T												
3	*	*	T	T											
4	*	*	T	T	T										
6	*	*	W	T	T	T									
8	*	*	W	W	T	T	T								
10	*	*	W	W	W	T	T	T							
12	*	*	W	W	W	T	T	T	T						
14	*	*	W	W	W	W	T	T	T	T					
16	*	*	W	W	W	W	T	T	T	T	T				
18	*	*	W	W	W	W	W	T	T	T	T	T			
20	*	*	W	W	W	W	W	T	T	T	T	T	T		
24	*	*	W	W	W	W	W	W	T	T	T	T	T	T	
30	*	*	W	W	W	W	W	W	W	W	T	T	T	T	T

LEGEND	
*	Sockolet
W	Weldolet
T	TEE

Branch Pipe

Valve Data

Size(in)	0.5	0.75	1	1.5	2	3	4	6	8	10	12	14	16	18	20	22	24
Gate Valve																	
TAG	VG 107,SW				VG 117,FLANGED												
Rating	# 1500				# 900,RTJ												
Plug Valve																	
TAG																	
Rating																	
Ball Valve																	
TAG	VB 107,SW				VB 117,												
Rating	# 1500				# 900,RTJ												
Globe Valve																	
TAG	VGL 106,SW				VGL 117												
Rating	# 1500				# 900,RTJ												
Check Valve																	
TAG	VC 106,SW,Lift Check				VC 117,Swing Check												
Rating	# 1500				# 900,RTJ												
Needle Valve																	
TAG	VN 107,SW																
Rating	# 1500																
Butter Fly Valve																	
TAG																	
Rating																	

Notes Releted to Valve and Brach Connection

1. PMS to be read in conjuction with FS 2004 A.
2. Maximum temperature limit for all Ball Valve shall be suitable to maximum temperature of the project.

Revision	Date	Description	Prepared By	Reviewed By	Approved By
Revision: 1	15.01.16	Issued For Bid	PS	AKM	SJ

ONGC	Offshore Design Section Engineering Services IS0-9001:2000	**PIPING MATERIAL SPECIFICATION**												Sheet No.		**1 of 2**	
		Piping Class							Material			C.A	Spec.No			Revision: 1	
		XG15					# 5000 API		Incoloy 825			Nil	2004A,Rev 9			Page No.	105
		Code:ASME B 31.3 and other applicable Code NACE-MR-01-75/ISO-15156-1/2/3,API 6A															
		Service: Corrosive HydroCarbon Service-Sour Liquid and Vapour.															

Pipe Data	ASME B 36.10																
Size(in)	0.5	0.75	1	1.5	2 1/16	3 1/8	4 1/16	7 1/16	8	10	12	14	16	18	20	22	24
O.D.mm	21.3	26.7	33.4	48.3	60.3	88.9	114.3	168.3	219.1	273.1	323.9	355.6	406.4	457.2	508	558.8	609.6
Sch.	80s	80s	80s	160	160	160	160	XXS									
WTmm	3.73	3.91	4.55	7.14	8.74	11.13	13.49	10.97									
M.T (%)	12.5	12.5	12.5	12.5	12.5	12.5	12.5	12.5	12.5	12.5	12.5	5.0	5.0	5.0	5.0	5.0	5.0
TYPE	Seamless											Welded pipe from clad plate. Note -5					
MOC	ASTM B 423 UNSN08825 Cold finnished Annealed								ASTM B 423 UNSN8825			API 5L Gr.B Pipe with Incoly cladding, Note 7					
Ends	PE				BE												
Fittings Data																	
Size(in)	0.5	0.75	1	1.5	2	3	4	6	8	10	12	14	16	18	20	22	24
TYPE	Socket Weld				Butt Weld												
Rating	# 9000																
MOC	ASTM B 564 UNS N08825				ASTM B 366 WP NIC MC S UNS N08825							ASTM A 234 WPB with cladding min. 3mm. Note 9					
Elbow	ASMEB16.11				ASME B 16.9							ASME B 16.9					
Tee	ASMEB16.11				ASME B 16.9							ASME B 16.9					
Red.	ASMEB16.11				ASME B 16.9							ASME B 16.9					
Cap	ASMEB16.11				ASME B 16.9							ASME B 16.9					
Coupl	ASMEB16.11				ASME B 16.9							ASME B 16.9					
Plug	ASMEB16.11				ASME B 16.9							ASME B 16.9					
Union																	
Elbowlet	MSS SP 97,B 564 UNS N08825				MSS SP 97,ASTM B 564 UNS N08825							MSSSP 97,ASTMA105 ,cladding min.3mm.Note9					
Sockolet	MSS SP 97,B 564 UNS N08825				MSS SP 97,ASTM B 564 UNS N08825							MSSSP 97,ASTMA105 ,cladding min.3mm.Note9					
Weldolet	MSS SP 97,B 564 UNS N08825				MSS SP 97,ASTM B 564 UNS N08825							MSSSP 97,ASTMA105 ,cladding min.3mm.Note9					
Nipple	MSS SP 97,Same as pipe				MOC Same as pipe							MOC Same as pipe					
Swage	MSS SP 95,Same as pipe				MSS SP 95, MOC Same as pipe							MSS SP 95, MOC Same as pipe					
Flange																	
Size(in)	0.5	0.75	1	1.5	2	3	4	6	8	10	12	14	16	18	20	22	24
TYPE	SW				WN							WN					
MOC	ASTM B 564 UNS N08825				ASTM B 564 UNS N08825							MSSSP 97,ASTMA105 ,cladding min.3mm.Note9					
FACE	RTJ-Note 8				RTJ-Note 8												
STD.	ASME B 16.5				ASME B 16.5, But welding ends as per ASME B 16.25												
Spectacle Blind/Spacer Blinds																	
Size(in)	0.5	0.75	1	1.5	2	3	4	6	8	10	12	14	16	18	20	22	24
MOC	ASTM B 564 UNS N08825																
Spectacle	ASME B 16.48				ASME B 16.48							Spacer and blind as per ASME B 16.48					
Mechanical Joints																	
Stud Bolts	ASTM A 453 Gr. 660 CL A																
Hex Nuts	ASTM A 453 Gr. 660 CL A																
Gasket	ASME B 16.20,OCT ring of UNS S 32205 with Max. Hardness of 22 HRC. Gasket contact surface roughness max. 63 AARH.																

Pressure-Temperature Rating				Maximum Hydrostatic Pressure	
Temp.,Deg F	Pressure, PSI	Temp,Deg C	Pressure, Kg/cm2	Pressure, psig	Pres.,Kg/cm2g
60 to 100	5000	16 to 38	352	10000psig	704 Kg/cm2
				Limited by Flange considereing flange as the weakest joint in piping system	

Notes Releted to Pipe,Fittings,Flanges,Gasket and Stud Bolts -Nuts

1. Spectacle blinds and spacer sizes and rating that are not available in ASME B 16.48 shall be as per manufacturer standard. Design shall be submitted to company for review and approval.

2. Two jackscrew, 180 degree apart shall be provided in one of the flanges for all orifice flange and WNRTJ flanges above 3" size and specified spectacle blind.

3. All pipe thread shall be as per ASME B 1.20.1

4. PMS to be read in conjuction with FS 2004 A.

5. Only the base material thickness shall be considered.

6. Pipe sizes 8" to 12" shall be hotfinnished annealed (Solution annealed), pickled and end shall be bevelled. Allwable stress to be established for the temperature range based on actual evaluation after testing .

7. For sizes 14" and above welded pipe of clad plate with 100% radiography shall be used. Cladding of minimum 3mm shall be done with Incoloy 825 or Inconell 625 on API 5L Gr. B pipe.

8. RTJ groove hardness shall be 35 HRC.

9. Cladding shall be weld over lay type with Incoly 825 or Inconel 625 of min. 3mm

Offshore Design Section Engineering Services IS0-9001:2000	**PIPING MATERIAL SPECIFICATION**				Sheet No.	**2 of 2**
	Piping Class	Material	C.A	Spec.No	Revision: 1	
	XG15	# 5000 API	Incoloy 825	Nil	2004A,Rev 9	Page No. 106
	Code:ASME B 31.3 and other applicable Code NACE-MR-01-75/ISO-15156-1/2/3,API 6A					
	Service:	Corrosive HydroCarbon Service-Sour Liquid and Vapour.				
	0					

Branch Table as per API RP 14E

Run Pipe \ Branch Pipe	≤ 1	1-1.5	2	3	4	6	8	10	12	14	16	18	20	24	30
≤ 1	T														
1-1.5	T	T													
2	*	*	T												
3	*	*	T	T											
4	*	*	T	T	T										
6	*	*	W	T	T	T									
8	*	*	W	W	T	T	T								
10	*	*	W	W	W	T	T	T							
12	*	*	W	W	W	T	T	T	T						
14	*	*	W	W	W	W	T	T	T	T					
16	*	*	W	W	W	W	T	T	T	T	T				
18	*	*	W	W	W	W	W	T	T	T	T	T			
20	*	*	W	W	W	W	W	T	T	T	T	T	T		
24	*	*	W	W	W	W	W	W	T	T	T	T	T	T	
30	*	*	W	W	W	W	W	W	W	W	T	T	T	T	T

LEGEND	
*	Sockolet
W	Weldolet
T	TEE

Valve Data

Size(in)	0.5	0.75	1	1.5	2	3	4	6	8	10	12	14	16	18	20	22	24
Gate Valve																	
TAG	VG 108,SW				VG 118,FLANGED												
Rating	# 5000				# 5000,RTJ												
Plug Valve																	
TAG																	
Rating																	
Ball Valve																	
TAG	VB 108,SW				VB 118,												
Rating	# 5000				# 5000,RTJ												
Globe Valve																	
TAG	VGL 108,SW				VGL 118												
Rating	# 5000				# 5000,RTJ												
Check Valve																	
TAG	VC 108,SW,Lift Check				VC 118,Swing Check												
Rating	# 5000				# 5000,RTJ												
Needle Valve																	
TAG	VN 108,SW																
Rating	# 5000																
Butter Fly Valve																	
TAG																	
Rating																	

Notes Releted to Valve and Brach Connection

1. PMS to be read in conjuction with FS 2004 A.
2. Maximum temperature limit for all Ball Valve shall be suitable to maximum temperature of the project.
3. Groove hardness for DSS flange shall be 25HRC and 35 HRC for Incoloy flange.

Revision	Date	Description	Prepared By	Reviewed By	Approved By
Revision: 1	22/7/2009	Issued For Bid	PS	GJ	GRP

Offshore Design Section Engineering Services IS0-9001:2000	PIPING MATERIAL SPECIFICATION				Sheet No.	1 of 2
	Piping Class	Material	C.A	Spec.No	Revision: 1	
	XH15	# 10000 API	Incoloy 825	Nil	2004A,Rev 9	Page No. 107
	Code:ASME B 31.3 and other applicable Code NACE-MR-01-75/ISO-15156-1/2/3,API 6A					
	Service:	Corrosive HydroCarbon Service-Sour Liquid and Vapour.				

Pipe Data	ASME B 36.10																
Size(in)	0.5	0.75	1	1.5	2 1/16	3 1/8	4 1/16	7 1/16	8	10	12	14	16	18	20	22	24
O.D.mm	21.3	26.7	33.4	48.3	60.3	88.9	114.3	168.3	219.1	273.1	323.9	355.6	406.4	457.2	508	558.8	609.6
Sch.	160	XXS	XXS	XXS													
WTmm	4.78	7.82	9.09	10.15													
M.T (%)	12.5	12.5	12.5	12.5	12.5	12.5	12.5	12.5	12.5	12.5	12.5	5.0	5.0	5.0	5.0	5.0	5.0
TYPE	Seamless											Welded pipe from clad plate. Note -5					
MOC	ASTM B 423 UNSN08825 Cold finnished Annealed								ASTM B 423 UNSN8825			API 5L Gr.B Pipe with Incoly cladding, Note 7					
Ends	PE				BE												
Fittings Data																	
Size(in)	0.5	0.75	1	1.5	2	3	4	6	8	10	12	14	16	18	20	22	24
TYPE	Socket Weld				Butt Weld												
Rating	# 9000																
MOC	ASTM B 564 UNS N08825				ASTM B 366 WP NIC MC S UNS N08825							ASTM A 234 WPB with cladding min. 3mm. Note 9					
Elbow	ASMEB16.11				ASME B 16.9							ASME B 16.9					
Tee	ASMEB16.11				ASME B 16.9							ASME B 16.9					
Red.	ASMEB16.11				ASME B 16.9							ASME B 16.9					
Cap	ASMEB16.11				ASME B 16.9							ASME B 16.9					
Coupl	ASMEB16.11				ASME B 16.9							ASME B 16.9					
Plug	ASMEB16.11				ASME B 16.9							ASME B 16.9					
Union																	
Elbowlet	MSS SP 97,B 564 UNS N08825				MSS SP 97,ASTM B 564 UNS N08825							MSSSP 97,ASTMA105 ,cladding min.3mm.Note9					
Sockolet	MSS SP 97,B 564 UNS N08825				MSS SP 97,ASTM B 564 UNS N08825							MSSSP 97,ASTMA105 ,cladding min.3mm.Note9					
Weldolet	MSS SP 97,B 564 UNS N08825				MSS SP 97,ASTM B 564 UNS N08825							MSSSP 97,ASTMA105 ,cladding min.3mm.Note9					
Nipple	MSS SP 97,Same as pipe				MOC Same as pipe							MOC Same as pipe					
Swage	MSS SP 95,Same as pipe				MSS SP 95, MOC Same as pipe							MSS SP 95, MOC Same as pipe					
Flange																	
Size(in)	0.5	0.75	1	1.5	2	3	4	6	8	10	12	14	16	18	20	22	24
TYPE	SW				WN							WN					
MOC	ASTM B 564 UNS N08825				ASTM B 564 UNS N08825							MSSSP 97,ASTMA105 ,cladding min.3mm.Note9					
FACE	RTJ-Note 8				RTJ-Note 8												
STD.	ASME B 16.5				ASME B 16.5, But welding ends as per ASME B 16.25												
Spectacle Blind/Spacer Blinds																	
Size(in)	0.5	0.75	1	1.5	2	3	4	6	8	10	12	14	16	18	20	22	24
MOC	ASTM B 564 UNS N08825																
Spectacle	ASME B 16.48				ASME B 16.48							Spacer and blind as per ASME B 16.48					
Mechanical Joints																	
Stud Bolts	ASTM A 453 Gr. 660 CL A																
Hex Nuts	ASTM A 453 Gr. 660 CL A																
Gasket	ASME B 16.20,OCT ring of UNS S 32205 with Max. Hardness of 22 HRC. Gasket contact surface roughness max. 63 AARH.																

Pressure-Temperature Rating				Maximum Hydrostatic Pressure	
Temp.,Deg F	Pressure, PSI	Temp,Deg C	Pressure, Kg/cm2	Pressure, psig	Pres.,Kg/cm2g
60 to 100	10000	16 to 38	704	15000psig	1055 Kg/cm2
				Limited by Flange considereing flange as the weakest joint in piping system	

Notes Releted to Pipe,Fittings,Flanges,Gasket and Stud Bolts -Nuts

1. Spectacle blinds and spacer sizes and rating that are not available in ASME B 16.48 shall be as per manufacturer standard. Design shall be submitted to company for review and approval.
2. Two jackscrew, 180 degree apart shall be provided in one of the flanges for all orifice flange and WNRTJ flanges above 3" size and specified spectacle blind.
3. All pipe thread shall be as per ASME B 1.20.1
4. PMS to be read in conjuction with FS 2004 A.
5. Only the base material thickness shall be considered.
6. Pipe sizes 8" to 12" shall be hotfinnished annealed (Solution annealed), pickled and end shall be bevelled. Allwable stress to be established for the temperature range based on actual evaluation after testing .
7. For sizes 14" and above welded pipe of clad plate 100% radiography shall be used. Cladding of minimum 3mm shall be done with Incoloy 825 or Inconell 625 on API 5L Gr. B pipe.
8. RTJ groove hardness shall be 35 HRC.
9. Cladding shall be weld over lay type with Incoly 825 or Inconel 625 of min. 3mm

Offshore Design Section Engineering Services IS0-9001:2000	PIPING MATERIAL SPECIFICATION				Sheet No.	2 of 2
	Piping Class		Material	C.A	Spec.No	Revision: 1
	XH15	# 10000 API	Incoloy 825	Nil	2004A,Rev 9	Page No. 108
	Code:ASME B 31.3 and other applicable Code NACE-MR-01-75/ISO-15156-1/2/3,API 6A					
	Service:	Corrosive HydroCarbon Service-Sour Liquid and Vapour.				
	0					

Branch Table as per API RP 14E

Run Pipe	≤ 1	T														
	1-1.5	T	T													
	2	*	*	T												
	3	*	*	T	T											
	4	*	*	T	T	T										
	6	*	*	W	T	T	T									
	8	*	*	W	W	T	T	T								
	10	*	*	W	W	W	T	T	T							
	12	*	*	W	W	W	T	T	T	T						
	14	*	*	W	W	W	W	T	T	T	T					
	16	*	*	W	W	W	W	T	T	T	T	T				
	18	*	*	W	W	W	W	W	T	T	T	T	T			
	20	*	*	W	W	W	W	W	T	T	T	T	T	T		
	24	*	*	W	W	W	W	W	W	T	T	T	T	T	T	
	30	*	*	W	W	W	W	W	W	W	W	T	T	T	T	T
		≤ 1	1-1.5	2	3	4	6	8	10	12	14	16	18	20	24	30
	Branch Pipe															

LEGEND	
*	Sockolet
W	Weldolet
T	TEE

Valve Data

Size(in)	0.5	0.75	1	1.5	2	3	4	6	8	10	12	14	16	18	20	22	24
Gate Valve																	
TAG	VG 106,SW				VG 116,FLANGED												
Rating	# 10000				# 10000,RTJ												
Plug Valve																	
TAG																	
Rating																	
Ball Valve																	
TAG	VB 106,SW				VB 116,												
Rating	# 10000				# 10000,RTJ												
Globe Valve																	
TAG	VGL 106,SW				VGL 116												
Rating	# 10000				# 10000,RTJ												
Check Valve																	
TAG	VC 106,SW,Lift Check				VC 116,Swing Check												
Rating	# 10000				# 10000,RTJ												
Needle Valve																	
TAG	VN 106,SW																
Rating	# 10000																
Butter Fly Valve																	
TAG																	
Rating																	

Notes Releted to Valve and Brach Connection

1. PMS to be read in conjuction with FS 2004 A.
2. Maximum temperature limit for all Ball Valve shall be suitable to maximum temperature of the project.
3. Groove hardness for DSS flange shall be 25HRC and 35 HRC for Incoloy flange.

Revision	Date	Description	Prepared By	Reviewed By	Approved By
Revision: 1	22/7/2009	Issued For Bid	PS	GJ	GRP

Offshore Design Section Engineering Services IS0-9001:2000	PIPING MATERIAL SPECIFICATION				Sheet No.	1 of 2
	Piping Class	Material	C.A	Spec.No	Revision: 0	
	A15A	# 150	Inconel 625	Nil	2004A,Rev 9	Page No. 109
	Code:ASME B 31.3 and other applicable Code NACE-MR-01-75/ISO-15156-1/2/3					
	Service:	Corrosive HydroCarbon Service-Sour Liquid and Vapour.				

Pipe Data	ASME B 36.10																
Size(in)	0.5	0.75	1	1.5	2	3	4	6	8	10	12	14	16	18	20	22	24
O.D.mm	21.3	26.7	33.4	48.3	60.3	88.9	114.3	168.3	219.1	273.1	323.9	355.6	406.4	457.2	508	558.8	609.6
Sch.	40s	40s	40s	40s	10s	10s	10s	10s	10s	10s	10s						
WTmm	2.77	2.87	3.38	3.68	2.77	3.05	3.05	3.40	3.76	4.19	4.57						
M.T (%)	12.5	12.5	12.5	12.5	12.5	12.5	12.5	12.5	12.5	12.5	12.5	5.0	5.0	5.0	5.0	5.0	5.0
TYPE	Seamless											Welded pipe from clad plate. Note -5					
MOC	ASTM B 444 UNSN06625 Gr.1											API 5L Gr.B Pipe with Inconel cladding, Note 6					
Ends	PE				BE												
Fittings Data																	
Size(in)	0.5	0.75	1	1.5	2	3	4	6	8	10	12	14	16	18	20	22	24
TYPE	Socket Weld				Butt Weld												
Rating	# 3000				10s	10s	10s	10s	10s	10s	10s						
MOC	ASTM B 564 UNS N06625				ASTM B 366 WP NC MC S UNS N06625							ASTM A 234 WPB with cladding min. 3mm. Note 7					
Elbow	ASMEB16.11				ASME B 16.9							ASME B 16.9					
Tee	ASMEB16.11				ASME B 16.9							ASME B 16.9					
Red.	ASMEB16.11				ASME B 16.9							ASME B 16.9					
Cap	ASMEB16.11				ASME B 16.9							ASME B 16.9					
Coupl	ASMEB16.11				ASME B 16.9							ASME B 16.9					
Plug	ASMEB16.11				ASME B 16.9							ASME B 16.9					
Union																	
Elbowlet	MSS SP 97,B 564 UNS N06625				MSS SP 97,ASTM B 564 UNS N06625							MSSSP 97,ASTMA105 ,cladding min.3mm.Note7					
Sockolet	MSS SP 97,B 564 UNS N06625				MSS SP 97,ASTM B 564 UNS N06625							MSSSP 97,ASTMA105 ,cladding min.3mm.Note7					
Weldolet	MSS SP 97,B 564 UNS N06625				MSS SP 97,ASTM B 564 UNS N06625							MSSSP 97,ASTMA105 ,cladding min.3mm.Note7					
Nipple	MSS SP 97,Same as pipe				MOC Same as pipe							MOC Same as pipe					
Swage	MSS SP 95,Same as pipe				MSS SP 95, MOC Same as pipe							MSS SP 95, MOC Same as pipe					
Flange																	
Size(in)	0.5	0.75	1	1.5	2	3	4	6	8	10	12	14	16	18	20	22	24
TYPE	SW				WN							WN					
MOC	ASTM B 564 UNS N06625				ASTM B 564 UNS N06625							MSSSP 97,ASTMA105 ,cladding min.3mm.Note7					
FACE	RF,Serrated Finnished				RF,Serrated Finnished												
STD.	ASME B 16.5				ASME B 16.5, But welding ends as per ASME B 16.25												
Spectacle Blind/Spacer Blinds																	
Size(in)	0.5	0.75	1	1.5	2	3	4	6	8	10	12	14	16	18	20	22	24
MOC	ASTM B 564 UNS N06625																
Spectacle	ASME B 16.48				ASME B 16.48							Spacer and blind as per ASME B 16.48					
Mechanical Joints																	
Stud Bolt	ASTM A 453 Gr. 660 CL A																
Hex Nuts	ASTM A 453 Gr. 660 CL A																
Gasket	ASME B 16.20 , 5mm thick Duplex SS Spiral wound gasket with CNAF filler																

Pressure-Temperature Rating				Maximum Hydrostatic Pressure	
Temp.,Deg F	Pressure, PSI	Temp,Deg C	Pressure, Kg/cm2	Pressure, psig	Pres.,Kg/cm2g
(-) 20 to 100	290	(-) 29 to 38	20.3	435psig	31 Kg/cm2
200	260	93	18.3	Limited by Flange considereing flange as the weakest joint in piping system	
300	230	149	16.2		

Notes Releted to Pipe,Fittings,Flanges,Gasket and Stud Bolts -Nuts

1. Spectacle blinds and spacer sizes and rating that are not available in ASME B 16.48 shall be as per manufacturer standard. Design shall be submitted to company for review and approval.
2. Two jackscrew, 180 degree apart shall be provided in one of the flanges for all orifice flange and specified flange and spectacle blind.
3. All pipe thread shall be as per ASME B 1.20.1
4. PMS to be read in conjuction with FS 2004 A.
5. Only the base material thickness shall be considered.
6. For sizes 14" and above welded pipe of clad plate with 100% radiography shall be used. Cladding of minimum 3mm shall be done with Inconel 625 on API 5L Gr. B pipe.
7. Cladding shall be weld over lay type with Inconel 625 of min. 3mm
8. To use Schedule 80 for sizes less than 1/1/2" for threaded pipe and fittings.

Offshore Design Section Engineering Services IS0-9001:2000	**PIPING MATERIAL SPECIFICATION**				Sheet No.	**2 of 2**
	Piping Class	Material	C.A	Spec.No	Revision: 0	
	A15A	# 150	Inconel 625	Nil	2004A,Rev 9	Page No. 110
	Code:ASME B 31.3 and other applicable Code NACE-MR-01-75/ISO-15156-1/2/3					
	Service:	Corrosive HydroCarbon Service-Sour Liquid and Vapour.				
	0					

Branch Table as per API RP 14E

Run Pipe	≤ 1	1-1.5	2	3	4	6	8	10	12	14	16	18	20	24	30
≤ 1	T														
1-1.5	T	T													
2	*	*	T												
3	*	*	T	T											
4	*	*	T	T	T										
6	*	*	W	T	T	T									
8	*	*	W	W	T	T	T								
10	*	*	W	W	W	T	T	T							
12	*	*	W	W	W	T	T	T	T						
14	*	*	W	W	W	W	T	T	T	T					
16	*	*	W	W	W	W	T	T	T	T	T				
18	*	*	W	W	W	W	W	T	T	T	T	T			
20	*	*	W	W	W	W	W	T	T	T	T	T	T		
24	*	*	W	W	W	W	W	W	T	T	T	T	T	T	
30	*	*	W	W	W	W	W	W	W	W	T	T	T	T	T

LEGEND	
*	Sockolet
W	Weldolet
T	TEE

Branch Pipe

Valve Data

Size(in)	0.5	0.75	1	1.5	2	3	4	6	8	10	12	14	16	18	20	22	24
Gate Valve																	
TAG	VG 105-1,SW				VG 111-1,FLANGED												
Rating	# 800				# 150,RF												
Plug Valve																	
TAG																	
Rating																	
Ball Valve																	
TAG	VB 105-1,SW				VB 111-1, Flanged												
Rating	# 800				# 150,RF												
Globe Valve																	
TAG	VGL 104-1,SW				VGL 111-1,flanged												
Rating	# 800				# 150,RF												
Check Valve																	
TAG	VC 104-1,SW,Lift Check				VC 111-1,Swing Check												
Rating	# 800				# 150,RF												
Needle Valve																	
TAG	VN 105-1,SW																
Rating	# 800																
Butter Fly Valve																	
TAG																	
Rating																	

Notes Releted to Valve and Brach Connection

1. PMS to be read in conjuction with FS 2004 A.
2. Maximum temperature limit for all Ball Valve shall be suitable to maximum temperature of the project.

Revision	Date	Description	Prepared By	Reviewed By	Approved By
Revision: 0	22/7/2009	Issued For Bid	PS	GJ	GRP

Offshore Design Section Engineering Services IS0-9001:2000	PIPING MATERIAL SPECIFICATION				Sheet No.	1 of 2
	Piping Class	Material	C.A	Spec.No	Revision: 0	
	B15A	# 300	Inconel 625	Nil	2004A,Rev 9	Page No. 111
	Code:ASME B 31.3 and other applicable Code NACE-MR-01-75/ISO-15156-1/2/3					
	Service:	Corrosive HydroCarbon Service-Sour Liquid and Vapour.				

Pipe Data	ASME B 36.10																
Size(in)	0.5	0.75	1	1.5	2	3	4	6	8	10	12	14	16	18	20	22	24
O.D.mm	21.3	26.7	33.4	48.3	60.3	88.9	114.3	168.3	219.1	273.1	323.9	355.6	406.4	457.2	508	558.8	609.6
Sch.	80s	80s	80s	80s	10s	10s	10s	10s	10s	10s	10s						
WTmm	3.73	3.91	4.55	5.08	2.77	3.05	3.05	3.40	3.76	4.19	4.57						
M.T (%)	12.5	12.5	12.5	12.5	12.5	12.5	12.5	12.5	12.5	12.5	12.5	5.0	5.0	5.0	5.0	5.0	5.0
TYPE	Seamless											Welded pipe from clad plate. Note -5					
MOC	ASTM B 444 UNSN06625 Gr.1											API 5L Gr.B Pipe with Inconel cladding, Note 6					
Ends	PE				BE												
Fittings Data																	
Size(in)	0.5	0.75	1	1.5	2	3	4	6	8	10	12	14	16	18	20	22	24
TYPE	Socket Weld				Butt Weld												
Rating	# 3000				10s	10s	10s	10s	10s	10s	10s						
MOC	ASTM B 564 UNS N06625				ASTM B 366 WP NC MC S UNS N06625							ASTM A 234 WPB with cladding min. 3mm. Note 7					
Elbow	ASMEB16.11				ASME B 16.9							ASME B 16.9					
Tee	ASMEB16.11				ASME B 16.9							ASME B 16.9					
Red.	ASMEB16.11				ASME B 16.9							ASME B 16.9					
Cap	ASMEB16.11				ASME B 16.9							ASME B 16.9					
Coupl	ASMEB16.11				ASME B 16.9							ASME B 16.9					
Plug	ASMEB16.11				ASME B 16.9							ASME B 16.9					
Union																	
Elbowlet	MSS SP 97,B 564 UNS N06625				MSS SP 97,ASTM B 564 UNS N06625							MSSSP 97,ASTMA105 ,cladding min.3mm.Note7					
Sockolet	MSS SP 97,B 564 UNS N06625				MSS SP 97,ASTM B 564 UNS N06625							MSSSP 97,ASTMA105 ,cladding min.3mm.Note7					
Weldolet	MSS SP 97,B 564 UNS N06625				MSS SP 97,ASTM B 564 UNS N06625							MSSSP 97,ASTMA105 ,cladding min.3mm.Note7					
Nipple	MSS SP 97,Same as pipe				MOC Same as pipe							MOC Same as pipe					
Swage	MSS SP 95,Same as pipe				MSS SP 95, MOC Same as pipe							MSS SP 95, MOC Same as pipe					
Flange																	
Size(in)	0.5	0.75	1	1.5	2	3	4	6	8	10	12	14	16	18	20	22	24
TYPE	SW				WN							WN					
MOC	ASTM B 564 UNS N06625				ASTM B 564 UNS N06625							MSSSP 97,ASTMA105 ,cladding min.3mm.Note7					
FACE	RF,Smooth Finnished				RF,Smooth Finnished												
STD.	ASME B 16.5				ASME B 16.5, But welding ends as per ASME B 16.25												
Spectacle Blind/Spacer Blinds																	
Size(in)	0.5	0.75	1	1.5	2	3	4	6	8	10	12	14	16	18	20	22	24
MOC	ASTM B 564 UNS N06625																
Spectacle	ASME B 16.48				ASME B 16.48							Spacer and blind as per ASME B 16.48					
Mechanical Joints																	
Stud Bolt	ASTM A 453 Gr. 660 CL A																
Hex Nuts	ASTM A 453 Gr. 660 CL A																
Gasket	ASME B 16.20 , 5mm thick Duplex SS Spiral wound gasket with CNAF filler																

Pressure-Temperature Rating				Maximum Hydrostatic Pressure	
Temp.,Deg F	Pressure, PSI	Temp,Deg C	Pressure, Kg/cm2	Pressure, psig	Pres.,Kg/cm2g
(-) 20 to 100	750	(-) 29 to 38	52.8	1125psig	80 Kg/cm2
200	750	93	52.8	Limited by Flange considereing flange as the weakest joint in piping system	
300	730	149	51.3		

Notes Releted to Pipe,Fittings,Flanges,Gasket and Stud Bolts -Nuts

1. Spectacle blinds and spacer sizes and rating that are not available in ASME B 16.48 shall be as per manufacturer standard. Design shall be submitted to company for review and approval
2. Two jackscrew, 180 degree apart shall be provided in one of the flanges for all orifice flange and specified flange and spectacle blind.
3. All pipe thread shall be as per ASME B 1.20.1
4. PMS to be read in conjuction with FS 2004 A.
5. Only the base material thickness shall be considered.
6. For sizes 14" and above welded pipe of clad plate with 100% radiography shall be used. Cladding of minimum 3mm shall be done with Inconel 625 on API 5L Gr. B pipe.
7. Cladding shall be weld over lay type with Inconel 625 of min. 3mm

Offshore Design Section Engineering Services IS0-9001:2000	**PIPING MATERIAL SPECIFICATION**				Sheet No.	**2 of 2**
	Piping Class	Material	C.A	Spec.No	Revision: 0	
	B15A	# 300	Inconel 625	Nil	2004A,Rev 9	Page No. 112
	Code:ASME B 31.3 and other applicable Code NACE-MR-01-75/ISO-15156-1/2/3					
	Service:	Corrosive HydroCarbon Service-Sour Liquid and Vapour.				
	0					

Branch Table as per API RP 14E

Run Pipe \ Branch Pipe	≤ 1	1-1.5	2	3	4	6	8	10	12	14	16	18	20	24	30
≤ 1	T														
1-1.5	T	T													
2	*	*	T												
3	*	*	T	T											
4	*	*	T	T	T										
6	*	*	W	T	T	T									
8	*	*	W	W	T	T	T								
10	*	*	W	W	W	T	T	T							
12	*	*	W	W	W	T	T	T	T						
14	*	*	W	W	W	W	T	T	T	T					
16	*	*	W	W	W	W	T	T	T	T	T				
18	*	*	W	W	W	W	W	T	T	T	T	T			
20	*	*	W	W	W	W	W	T	T	T	T	T	T		
24	*	*	W	W	W	W	W	W	T	T	T	T	T	T	
30	*	*	W	W	W	W	W	W	W	W	T	T	T	T	T

LEGEND	
*	Sockolet
W	Weldolet
T	TEE

Valve Data

Size(in)	0.5	0.75	1	1.5	2	3	4	6	8	10	12	14	16	18	20	22	24
Gate Valve																	
TAG	VG 105-1,SW				VG 113-1,FLANGED												
Rating	# 800				# 300,RF												
Plug Valve																	
TAG																	
Rating																	
Ball Valve																	
TAG	VB 105-1,SW				VB 113-1,												
Rating	# 800				# 300,RF												
Globe Valve																	
TAG	VGL 104-1,SW				VGL 113-1												
Rating	# 800				# 300,RF												
Check Valve																	
TAG	VC 104-1,SW,Lift Check				VC 113-1,Swing Check												
Rating	# 800				# 300,RF												
Needle Valve																	
TAG	VN 105-1,SW																
Rating	# 800																
Butter Fly Valve																	
TAG																	
Rating																	

Notes Releted to Valve and Brach Connection

1. PMS to be read in conjuction with FS 2004 A.
2. Maximum temperature limit for all Ball Valve shall be suitable to maximum temperature of the project.

Revision	Date	Description	Prepared By	Reviewed By	Approved By
Revision: 0	22/7/2009	Issued For Bid	PS	GJ	GRP

	Offshore Design Section Engineering Services IS0-9001:2000				**PIPING MATERIAL SPECIFICATION**									Sheet No.		**1 of 2**	
					Piping Class				Material			C.A	Spec.No			Revision: 0	
					D15A			# 600	Inconel 625			Nil	2004A,Rev 9			Page No.	113
					Code:ASME B 31.3 and other applicable Code NACE-MR-01-75/ISO-15156-1/2/3												
					Service: Corrosive HydroCarbon Service-Sour Liquid and Vapour.												
Pipe Data	ASME B 36.10																
Size(in)	0.5	0.75	1	1.5	2	3	4	6	8	10	12	14	16	18	20	22	24
O.D.mm	21.3	26.7	33.4	48.3	60.3	88.9	114.3	168.3	219.1	273.1	323.9	355.6	406.4	457.2	508	558.8	609.6
Sch.	80s	80s	80s	80s	10s	40s	40s	40s	40s	40s	40s						
WTmm	3.73	3.91	4.55	5.08	2.77	5.49	6.02	7.11	8.18	9.27	9.52						
M.T (%)	12.5	12.5	12.5	12.5	12.5	12.5	12.5	12.5	12.5	12.5	12.5	5.0	5.0	5.0	5.0	5.0	5.0
TYPE	Seamless											Welded pipe from clad plate. Note -5,					
MOC	ASTM B 444 UNSN06625 Gr.1											API 5L Gr.B Pipe with Inconel cladding, Note 6					
Ends	PE				BE												
Fittings Data																	
Size(in)	0.5	0.75	1	1.5	2	3	4	6	8	10	12	14	16	18	20	22	24
TYPE	Socket Weld				Butt Weld												
Rating	# 3000				10s	40s	40s	40s	40s	40s	40s						
MOC	ASTM B 564 UNS N06625				ASTM B 366 WP NC MC S UNS N06625							ASTM A 234 WPB with cladding min. 3mm. Note 7					
Elbow	ASMEB16.11				ASME B 16.9							ASME B 16.9					
Tee	ASMEB16.11				ASME B 16.9							ASME B 16.9					
Red.	ASMEB16.11				ASME B 16.9							ASME B 16.9					
Cap	ASMEB16.11				ASME B 16.9							ASME B 16.9					
Coupl	ASMEB16.11				ASME B 16.9							ASME B 16.9					
Plug	ASMEB16.11				ASME B 16.9							ASME B 16.9					
Union																	
Elbowlet	MSS SP 97,B 564 UNS N06625				MSS SP 97,ASTM B 564 UNS N06625							MSSSP 97,ASTMA105 ,cladding min.3mm.Note7					
Sockolet	MSS SP 97,B 564 UNS N06625				MSS SP 97,ASTM B 564 UNS N06625							MSSSP 97,ASTMA105 ,cladding min.3mm.Note7					
Weldolet	MSS SP 97,B 564 UNS N06625				MSS SP 97,ASTM B 564 UNS N06625							MSSSP 97,ASTMA105 ,cladding min.3mm.Note					
Nipple	MSS SP 97,Same as pipe				MOC Same as pipe							MOC Same as pipe					
Swage	MSS SP 95,Same as pipe				MSS SP 95, MOC Same as pipe							MSS SP 95, MOC Same as pipe					
Flange																	
Size(in)	0.5	0.75	1	1.5	2	3	4	6	8	10	12	14	16	18	20	22	24
TYPE	SW				WN							WN					
MOC	ASTM B 564 UNS N06625				ASTM B 564 UNS N06625							MSSSP 97,ASTMA105 ,cladding min.3mm.Note7					
FACE	RF,Smooth Finnished				RF,Smooth Finnished												
STD.	ASME B 16.5				ASME B 16.5, But welding ends as per ASME B 16.25												
Spectacle Blind/Spacer Blinds																	
Size(in)	0.5	0.75	1	1.5	2	3	4	6	8	10	12	14	16	18	20	22	24
MOC	ASTM B 564 UNS N06625																
Spectacle	ASME B 16.48				ASME B 16.48							Spacer and blind as per ASME B 16.48					
Mechanical Joints																	
Stud Bolt	ASTM A 453 Gr. 660 CL A																
Hex Nuts	ASTM A 453 Gr. 660 CL A																
Gasket	ASME B 16.20 , 5mm thick Duplex SS Spiral wound gasket with CNAF filler																

Pressure-Temperature Rating				Maximum Hydrostatic Pressure	
Temp.,Deg F	Pressure, PSI	Temp,Deg C	Pressure, Kg/cm2	Pressure, psig	Pres.,Kg/cm2g
(-) 20 to 100	1500	(-) 29 to 38	105.4	2250psig	158.2 Kg/cm2
200	1500	93	105.4	Limited by Flange considereing flange as the weakest joint in piping system	
300	1455	149	102.3		

Notes Releted to Pipe,Fittings,Flanges,Gasket and Stud Bolts -Nuts

1. Spectacle blinds and spacer sizes and rating that are not available in ASME B 16.48 shall be as per manufacturer standard. Design shall be submitted to company for review and approval
2. Two jackscrew, 180 degree apart shall be provided in one of the flanges for all orifice flange and specified flange and spectacle blind.
3. All pipe thread shall be as per ASME B 1.20.1
4. PMS to be read in conjuction with FS 2004 A.
5. Only the base material thickness shall be considered.
6. For sizes 14" and above welded pipe of clad plate with100% radiography shall be used. Cladding of minimum 3mm shall be done with Inconel 625 on API 5L Gr. B pipe.
7. Cladding shall be weld over lay type with Inconel 625 of min. 3mm

Offshore Design Section Engineering Services IS0-9001:2000	**PIPING MATERIAL SPECIFICATION**				Sheet No.	**2 of 2**
	Piping Class	Material	C.A	Spec.No	Revision: 0	
	D15A # 600	Inconel 625	Nil	2004A,Rev 9	Page No.	114
	Code:ASME B 31.3 and other applicable Code NACE-MR-01-75/ISO-15156-1/2/3					
	Service:	Corrosive HydroCarbon Service-Sour Liquid and Vapour.				
	0					

Branch Table as per API RP 14E

Run Pipe \ Branch Pipe	≤ 1	1-1.5	2	3	4	6	8	10	12	14	16	18	20	24	30
≤ 1	T														
1-1.5	T	T													
2	*	*	T												
3	*	*	T	T											
4	*	*	T	T	T										
6	*	*	W	T	T	T									
8	*	*	W	W	T	T	T								
10	*	*	W	W	W	T	T	T							
12	*	*	W	W	W	T	T	T	T						
14	*	*	W	W	W	W	T	T	T	T					
16	*	*	W	W	W	W	T	T	T	T	T				
18	*	*	W	W	W	W	W	T	T	T	T	T			
20	*	*	W	W	W	W	W	T	T	T	T	T	T		
24	*	*	W	W	W	W	W	W	T	T	T	T	T	T	
30	*	*	W	W	W	W	W	W	W	W	T	T	T	T	T

LEGEND	
*	Sockolet
W	Weldolet
T	TEE

Valve Data

Size(in)	0.5	0.75	1	1.5	2	3	4	6	8	10	12	14	16	18	20	22	24
Gate Valve																	
TAG	VG 105-1,SW				VG 115-1,FLANGED												
Rating	# 800				# 600,RF												
Plug Valve																	
TAG																	
Rating																	
Ball Valve																	
TAG	VB 105-1,SW				VB 115-1,												
Rating	# 800				# 600,RF												
Globe Valve																	
TAG	VGL 104-1,SW				VGL 115-1												
Rating	# 800				# 600,RF												
Check Valve																	
TAG	VC 104-1,SW,Lift Check				VC 115-1,Swing Check												
Rating	# 800				# 600,RF												
Needle Valve																	
TAG	VN 105-1,SW																
Rating	# 800																
Butter Fly Valve																	
TAG																	
Rating																	

Notes Releted to Valve and Brach Connection

1. PMS to be read in conjuction with FS 2004 A.
2. Maximum temperature limit for all Ball Valve shall be suitable to maximum temperature of the project.

Revision	Date	Description	Prepared By	Reviewed By	Approved By
Revision: 0	22/7/2009	Issued For Bid	PS	GJ	GRP

Offshore Design Section Engineering Services IS0-9001:2000					**PIPING MATERIAL SPECIFICATION**									Sheet No.		**1 of 2**	
					Piping Class				Material			C.A	Spec.No			Revision: 0	
					E15A		# 900		Inconel 625			Nil	2004A,Rev 9			Page No.	115
					Code:ASME B 31.3 and other applicable Code NACE-MR-01-75/ISO-15156-1/2/3												
					Service: Corrosive HydroCarbon Service-Sour Liquid and Vapour.												
Pipe Data	ASME B 36.10																
Size(in)	0.5	0.75	1	1.5	2	3	4	6	8	10	12	14	16	18	20	22	24
O.D.mm	21.3	26.7	33.4	48.3	60.3	88.9	114.3	168.3	219.1	273.1	323.9	355.6	406.4	457.2	508	558.8	609.6
Sch.	80s	80s	80s	80s	40s	40s	40s	80s	80s	80	80						
WTmm	3.73	3.91	4.55	5.08	3.91	5.49	6.02	10.97	12.7	15.1	17.47						
M.T (%)	12.5	12.5	12.5	12.5	12.5	12.5	12.5	12.5	12.5	12.5	12.5	5.0	5.0	5.0	5.0	5.0	5.0
TYPE	Seamless											Welded pipe from clad plate. Note -5,					
MOC	ASTM B 444 UNSN06625 Gr.1											API 5L Gr.B Pipe with Inconel cladding, Note 6					
Ends	PE				BE												
Fittings Data																	
Size(in)	0.5	0.75	1	1.5	2	3	4	6	8	10	12	14	16	18	20	22	24
TYPE	Socket Weld				Butt Weld												
Rating	# 3000				40s	40s	40s	80s	80s	80	80						
MOC	ASTM B 564 UNS N06625				ASTM B 366 WP NC MC S UNS N06625							ASTM A 234 WPB with cladding min. 3mm. Note 7					
Elbow	ASMEB16.11				ASME B 16.9							ASME B 16.9					
Tee	ASMEB16.11				ASME B 16.9							ASME B 16.9					
Red.	ASMEB16.11				ASME B 16.9							ASME B 16.9					
Cap	ASMEB16.11				ASME B 16.9							ASME B 16.9					
Coupl	ASMEB16.11				ASME B 16.9							ASME B 16.9					
Plug	ASMEB16.11				ASME B 16.9							ASME B 16.9					
Union																	
Elbowlet	MSS SP 97,B 564 UNS N06625				MSS SP 97,ASTM B 564 UNS N06625							MSSSP 97,ASTMA105 ,cladding min.3mm.Note7					
Sockolet	MSS SP 97,B 564 UNS N06625				MSS SP 97,ASTM B 564 UNS N06625							MSSSP 97,ASTMA105 ,cladding min.3mm.Note7					
Weldolet	MSS SP 97,B 564 UNS N06625				MSS SP 97,ASTM B 564 UNS N06625							MSSSP 97,ASTMA105 ,cladding min.3mm.Note					
Nipple	MSS SP 97,Same as pipe				MOC Same as pipe							MOC Same as pipe					
Swage	MSS SP 95,Same as pipe				MSS SP 95, MOC Same as pipe							MSS SP 95, MOC Same as pipe					
Flange																	
Size(in)	0.5	0.75	1	1.5	2	3	4	6	8	10	12	14	16	18	20	22	24
TYPE	SW				WN										WN		
MOC	ASTM B 564 UNS N06625				ASTM B 564 UNS N06625							MSSSP 97,ASTMA105 ,cladding min.3mm.Note7					
FACE	RTJ-Note 8				RTJ-Note 8												
STD.	ASME B 16.5				ASME B 16.5, But welding ends as per ASME B 16.25												
Spectacle Blind/Spacer Blinds																	
Size(in)	0.5	0.75	1	1.5	2	3	4	6	8	10	12	14	16	18	20	22	24
MOC	ASTM B 564 UNS N06625																
Spectacle	ASME B 16.48				ASME B 16.48							Spacer and blind as per ASME B 16.48					
Mechanical Joints																	
Stud Bolt	ASTM A 453 Gr. 660 CL A																
Hex Nuts	ASTM A 453 Gr. 660 CL A																
Gasket	ASME B 16.20,OCT ring of UNS S 32205 with Max. Hardness of 22 HRC. Gasket contact surface roughness max. 63 AARH.																

Pressure-Temperature Rating				Maximum Hydrostatic Pressure	
Temp.,Deg F	Pressure, PSI	Temp,Deg C	Pressure, Kg/cm2	Pressure, psig	Pres.,Kg/cm2g
(-) 20 to 100	2250	(-) 29 to 38	158.1	3375psig	237.2 Kg/cm2
200	2250	93	158.1	Limited by Flange considereing flange as the weakest joint in piping system	
300	2185	149	153.6		

Notes Releted to Pipe,Fittings,Flanges,Gasket and Stud Bolts -Nuts

1. Spectacle blinds and spacer sizes and rating that are not available in ASME B 16.48 shall be as per manufacturer standard. Design shall be submitted to company for review and approval.
2. Two jackscrew, 180 degree apart shall be provided in one of the flanges for all orifice flange and specified flange and spectacle blind.
3. All pipe thread shall be as per ASME B 1.20.1
4. PMS to be read in conjuction with FS 2004 A.
5. Only the base material thickness shall be considered.
6. For sizes 14" and above welded pipe of clad plate with 100% radiography shall be used. Cladding of minimum 3mm shall be done with Inconel 625 on API 5L Gr. B pipe.
7. For sizes 14" and above welded pipe of clad plate with joint efficiency 1 shall be used. Cladding of minimum 3mm shall be done with Inconell 625 on API 5L Gr. B pipe.
8. RTJ groove hardness shall be 35 HRC.
9. Cladding shall be weld over lay type with Inconel 625 of min. 3mm

Offshore Design Section Engineering Services IS0-9001:2000	**PIPING MATERIAL SPECIFICATION**				Sheet No.	**2 of 2**	
	Piping Class		Material	C.A	Spec.No	Revision: 0	
	E15A	# 900	Inconel 625	Nil	2004A,Rev 9	Page No.	116
	Code:ASME B 31.3 and other applicable Code NACE-MR-01-75/ISO-15156-1/2/3						
	Service:	Corrosive HydroCarbon Service-Sour Liquid and Vapour.					
	0						

Branch Table as per API RP 14E

Run Pipe																
	≤ 1	T														
	1-1.5	T	T													
	2	*	*	T												
	3	*	*	T	T											
	4	*	*	T	T	T										
	6	*	*	W	T	T	T									
	8	*	*	W	W	T	T	T								
	10	*	*	W	W	W	T	T	T							
	12	*	*	W	W	W	T	T	T	T						
	14	*	*	W	W	W	W	T	T	T	T					
	16	*	*	W	W	W	W	T	T	T	T	T				
	18	*	*	W	W	W	W	W	T	T	T	T	T			
	20	*	*	W	W	W	W	W	T	T	T	T	T	T		
	24	*	*	W	W	W	W	W	W	T	T	T	T	T	T	
	30	*	*	W	W	W	W	W	W	W	W	T	T	T	T	T
		≤ 1	1-1.5	2	3	4	6	8	10	12	14	16	18	20	24	30
	Branch Pipe															

LEGEND	
*	Sockolet
W	Weldolet
T	TEE

Valve Data

Size(in)	0.5	0.75	1	1.5	2	3	4	6	8	10	12	14	16	18	20	22	24
Gate Valve																	
TAG	VG 107-1,SW				VG 117-1,FLANGED												
Rating	# 1500				# 900,RTJ												
Plug Valve																	
TAG																	
Rating																	
Ball Valve																	
TAG	VB 107-1,SW				VB 117-1,												
Rating	# 1500				# 900,RTJ												
Globe Valve																	
TAG	VGL 106-1,SW				VGL 117-1												
Rating	# 1500				# 900,RTJ												
Check Valve																	
TAG	VC 106-1,SW,Lift Check				VC 117-1,Swing Check												
Rating	# 1500				# 900,RTJ												
Needle Valve																	
TAG	VN 107-1,SW																
Rating	# 1500																
Butter Fly Valve																	
TAG																	
Rating																	

Notes Releted to Valve and Brach Connection

1. PMS to be read in conjuction with FS 2004 A.
2. Maximum temperature limit for all Ball Valve shall be suitable to maximum temperature of the project.

Revision: 0	22/7/2009	Issued For Bid	PS	GJ	GRP
Revision	Date	Description	Prepared By	Reviewed By	Approved By

	Offshore Design Section Engineering Services IS0-9001:2000				**PIPING MATERIAL SPECIFICATION**									Sheet No.		**1 of 2**	
					Piping Class			Material			C.A		Spec.No			Revision: 1	
					PE1		# 900	CS			3mm		2004A,Rev 9			Page No.	117
					Design Code:			**ASME B 31.4/31.8**									
					Service:	Hydro Carbon Liquid and Vapour, Injection Water (Piping from transition bend to Hinged closers Only)											
Pipe Data	ASME B 36.10																
Size(in)	0.5	0.75	1	1.5	2	3	4	6	8	10	12	14	16	18	20	22	24
O.D.mm	21.3	26.7	33.4	48.3	60.3	88.9	114.3	168.3	219.1	273.1	323.9	355.6	406.4	457.2	508	558.8	609.6
Sch.	XXS	XXS	XXS	XXS	160	160	120	Thickness shall be same as that of Pipe line for smooth Pigging									
WTmm	7.47	7.82	9.09	10.16	8.74	11.12	11.12	Thickness shall be same as that of Pipe line for smooth Pigging									
M.T (%)																	
TYPE	Seamless													LSAW with 100% Radiography			
MOC	ASTM A 106 Gr. B							API 5L Gr. X 60 or Same as Pipeline						API 5L Gr. 60 or same as pipeline			
Ends	PE				BE												
Fittings Data																	
Size(in)	0.5	0.75	1	1.5	2	3	4	6	8	10	12	14	16	18	20	22	24
TYPE	Socket Weld				Butt Weld, Seamless			Butt Welded, Seamless						Welded with 100% Radiography			
Rating	# 9000				160	160	120										
MOC	ASTM A 105 U.N.O				A 234 Gr. WPB, Seamless			MSS SP -75 Gr. WPHY rest portion of grade designation shall be compatible to pipe. U.N.O									
Elbow	ASMEB16.11				ASME B 16.9			MSS SP -75 and for piggable portion only 5D bends shall be used UNO.									
Tee	ASMEB16.11				ASME B 16.9			MSS SP -75									
Red.	ASMEB16.11				ASME B 16.9			MSS SP-75									
Cap	ASMEB16.11				ASME B 16.9			MSS SP-75									
Coupl	ASMEB16.11				ASME B 16.9			MSS SP-75									
Plug	ASMEB16.11				ASME B 16.9			MSS SP-75									
Elbowlet	MSS SP 97,ASTM A 105				MSS SP 97,ASTM A 105			ASTM A 694 Gr. rest portion of grade designation shall be compatible to pipe. U.N.O, MSS SP 97									
Sockolet	MSS SP 97,ASTM A 105				MSS SP 97,ASTM A 105			ASTM A 694 Gr. rest portion of grade designation shall be compatible to pipe. U.N.O, MSS SP 97									
Weldolet	MSS SP 97,ASTM A 105				MSS SP 97,ASTM A 105			ASTM A 694 Gr. rest portion of grade designation shall be compatible to pipe. U.N.O, MSS SP 97									
Nipple	MSS SP 95,Same as pipe				MSS SP 95MOC Same as pipe			MSS SP 95 MOC Same as pipe									
Swage	MSS SP 95,Same as pipe				MSS SP 95MOC Same as pipe			MSS SP 95 MOC Same as pipe									
Flange																	
Size(in)	0.5	0.75	1	1.5	2	3	4	6	8	10	12	14	16	18	20	22	24
TYPE	SW				WN			WN									
MOC	ASTM A 105				ASTM A 105			ASTM A 694 Grade designation shall be compatible to pipe. U.N.O									
FACE	RTJ-Note 7				RTJ, Note 7			RTJ, Note 7									
STD.	ASME B 16.5				B 16.5, But welding ends B 16.25			ASME B 16.5 with Butt Welding end as per ASME B 16.25									
Spectacle Blind/Spacer Blinds																	
Size(in)	0.5	0.75	1	1.5	2	3	4	6	8	10	12	14	16	18	20	22	24
MOC	ASTM A 105																
Spectacle	ASME B 16.48				ASME B 16.48							Spacer and blind as per ASME B 16.48					
Mechanical Joints																	
Stud Bolts	ASTM A 193 Gr. B7				ASTM A 193 Gr. B7												
Hex Nuts	ASTM A 194 Gr. 2H				ASTM A 194 Gr. 2H												
Gasket	B 16.20,OCT ring of Soft Iron with Max. 90BHN				ASME B 16.20,OCT ring of Soft Iron with Max. Hardness of 90BHN												

Pressure-Temperature Rating				Maximum Hydrostatic Pressure	
Temp.,Deg F	Pressure, PSI	Temp,Deg C	Pressure, Kg/cm2	Pressure, psig	Pres.,Kg/cm2g
(-) 4 to 100	2220	(-) 20 to 38	156	3350 psig	236 Kg/cm2
200	2035	93	143.07	Limited by Flange considereing flange as the weakest joint in piping system	
300	1965	149	138.2		
400	1900	204	133.6		
500	1810	260	127.2		

Notes Releted to Pipe,Fittings,Flanges,Gasket and Stud Bolts -Nuts

1. Welded fittings shall be 100% radiographed.
2.All alloy steel stud bolts and nuts shall be hot dip galvanized or electrogalvanized with minimum coating as per spec.
3. Spectacle blinds and spacer sizes and rating that are not available in ASME B 16.48 shall be as per manufacturer standard. Design shall be submitted to company for review and approval.
4. Two jackscrew, 180 degree apart shall be provided in one of the flanges for all orifice flange and specified flange and spectacle blind.
5. All pipe thread shall be as per ASME B 1.20.1
6. PMS to be read in conjuction with FS 2004 A.
7. Gasket Contact Surface shall have maximum roughness of 63AARH
8. Minimum RTJ groove hardness shall be 120BHN
9. Octagonal (OCT) ring shall be Hot Dip Galvanized or electro galvanized.
10.Piggable portion of piping shall be critically checked for passage of pigs with respect to internal diameter of each segment of pipeline.
11. Weld Joint Factor for welded pipe shall be as per ASME B 31.4/31.8

Offshore Design Section Engineering Services IS0-9001:2000	**PIPING MATERIAL SPECIFICATION**				Sheet No.	**2 of 2**
	Piping Class	Material	C.A	Spec.No	Revision: 1	
	PE1 # 900	CS	3mm	2004A,Rev 9	Page No.	118
	Design Code:	**ASME B 31.4/31.8**				
	Service:	Hydro Carbon Liquid and Vapour, Injection Water (Piping from transition bend to Hinged closers Only)				

Branch Table as per API RP 14E

LEGEND	
*	Sockolet
W	Weldolet
T	TEE

Run Pipe	≤ 1	1-1.5	2	3	4	6	8	10	12	14	16	18	20	24	30
≤ 1	T														
1-1.5	T	T													
2	*	*	T												
3	*	*	T	T											
4	*	*	T	T	T										
6	*	*	W	T	T	T									
8	*	*	W	W	T	T	T								
10	*	*	W	W	W	T	T	T							
12	*	*	W	W	W	T	T	T	T						
14	*	*	W	W	W	W	T	T	T	T					
16	*	*	W	W	W	W	T	T	T	T	T				
18	*	*	W	W	W	W	W	T	T	T	T	T			
20	*	*	W	W	W	W	W	T	T	T	T	T	T		
24	*	*	W	W	W	W	W	W	T	T	T	T	T	T	
30	*	*	W	W	W	W	W	W	W	W	T	T	T	T	T

	Branch Pipe														
Valve Data															
Size(in)	0.5	0.75	1	1.5	2	3	4	6	8	10	12	14	16	18	20	22	24
Gate Valve																	
TAG	VG 46,SW				VG 78,FLANGED												
Rating	# 1500				# 900,RTJ												
Plug Valve																	
TAG																	
Rating																	
Ball Valve																	
TAG	Use Gate Valve, VG 46				VB 84,LO	VB 85, Gear Operated											
Rating	# 1500				# 900, RTJ												
Globe Valve																	
TAG	VGL 44,SW				VGL 72												
Rating	# 1500				# 900, RTJ												
Check Valve																	
TAG	VC 44,SW,Lift Check				VC 68,Swing Check			VCS - 4 Full Port Swing Check									
Rating	# 1500				# 900, RTJ												
Needle Valve																	
TAG	VN 4,SW																
Rating	# 1500																
Butter Fly Valve																	
TAG																	
Rating																	

Notes Releted to Valve and Brach Connection

1. PMS to be read in conjuction with FS 2004 A.
2. Maximum temperature limit for all Ball Valve shall be 121 Degree C

Revision: 1	15.01.16	Issued For Bid	PS	AKM	SJ
Revision	Date	Description	Prepared By	Reviewed By	Approved By

Offshore Design Section Engineering Services IS0-9001:2000					**PIPING MATERIAL SPECIFICATION**									Sheet No.		**1 of 2**	
					Piping Class			Material			C.A		Spec.No			Revision: 0	
					PB1N		# 300	CS-NACE			6mm		2004A,Rev 9			Page No.	119
					Design Code: ASME B 31.4/31.8 and other applicable Code NACE-MR-01-75/ISO-15156-1/2/3												
					Service: Corrosive Hydro Carbon Liquid and Vapour, Injection Water (Piping from from transition bend to Hinged closers Only)												
Pipe Data	ASME B 36.10																
Size(in)	0.5	0.75	1	1.5	2	3	4	6	8	10	12	14	16	18	20	22	24
O.D.mm	21.3	26.7	33.4	48.3	60.3	88.9	114.3	168.3	219.1	273.1	323.9	355.6	406.4	457.2	508	558.8	609.6
Sch.	XXS	XXS	XXS	XXS	160	160	120	Thickness shall be same as that of Pipe line for smooth Pigging									
WTmm	7.47	7.8	9.09	10.16	8.74	9.52	11.12	Thickness shall be same as that of Pipe line for smooth Pigging									
M.T (%)																	
TYPE	Seamless													LSAW with 100% Radiography			
MOC	ASTM A 106 Gr. B							API 5L Gr. X 60 or Same as Pipeline						API 5L Gr. 60 or same as pipeline			
Ends	PE				BE												
Fittings Data																	
Size(in)	0.5	0.75	1	1.5	2	3	4	6	8	10	12	14	16	18	20	22	24
TYPE	Socket Weld				Butt Weld, Seamless			Butt Welded, Seamless						Welded with 100% Radiography			
Rating	# 9000				160	160	120										
MOC	ASTM A 105 U.N.O				A 234 Gr. WPB, Seamless			MSS SP -75 Gr. WPHY rest portion of grade designation shall be compatible to pipe. U.N.O									
Elbow	ASMEB16.11				ASME B 16.9			MSS SP -75 and for piggable portion only 5D bends shall be used UNO.									
Tee	ASMEB16.11				ASME B 16.9			MSS SP -75									
Red.	ASMEB16.11				ASME B 16.9			MSS SP-75									
Cap	ASMEB16.11				ASME B 16.9			MSS SP-75									
Coupl	ASMEB16.11				ASME B 16.9			MSS SP-75									
Plug	ASMEB16.11				ASME B 16.9			MSS SP-75									
Elbowlet	MSS SP 97,ASTM A 105				MSS SP 97,ASTM A 105			ASTM A 694 Gr. rest portion of grade designation shall be compatible to pipe. U.N.O, MSS SP 97									
Sockolet	MSS SP 97,ASTM A 105				MSS SP 97,ASTM A 105			ASTM A 694 Gr. rest portion of grade designation shall be compatible to pipe. U.N.O, MSS SP 97									
Weldolet	MSS SP 97,ASTM A 105				MSS SP 97,ASTM A 105			ASTM A 694 Gr. rest portion of grade designation shall be compatible to pipe. U.N.O, MSS SP 97									
Nipple	MSS SP 95,Same as pipe				MSS SP 95MOC Same as pipe			MSS SP 95 MOC Same as pipe									
Swage	MSS SP 95,Same as pipe				MSS SP 95MOC Same as pipe			MSS SP 95 MOC Same as pipe									
Flange																	
Size(in)	0.5	0.75	1	1.5	2	3	4	6	8	10	12	14	16	18	20	22	24
TYPE	SW				WN			WN									
MOC	ASTM A 105				ASTM A 105			ASTM A 694 Grade designation shall be compatible to pipe. U.N.O									
FACE	RF, Smooth Finnished				RF, Smooth Finnished			RF, Smooth Finnished									
STD.	ASME B 16.5				B 16.5, But welding ends B 16.25			ASME B 16.5 with Butt Welding end as per ASME B 16.25									
Spectacle Blind/Spacer Blinds																	
Size(in)	0.5	0.75	1	1.5	2	3	4	6	8	10	12	14	16	18	20	22	24
MOC	ASTM A 105																
Spectacle	ASME B 16.48				ASME B 16.48							Spacer and blind as per ASME B 16.48					
Mechanical Joints																	
Stud Bolt	ASTM A 193 Gr. B7M				ASTM A 193 Gr. B7M												
Hex Nuts	ASTM A 194 Gr. 2HM				ASTM A 194 Gr. 2HM												
Gasket	B 16.20,4.5mm, SS Spiral wound with CNAF filler				ASME B 16.20,4.5mm, SS Spiral wound with CNAF filler												

Pressure-Temperature Rating				Maximum Hydrostatic Pressure	
Temp.,Deg F	Pressure, PSI	Temp,Deg C	Pressure, Kg/cm2	Pressure, psig	Pres.,Kg/cm2g
(-) 4 to 100	740	(-) 20 to 38	52	1125 psig	79 Kg/cm2
200	675	93	47.5	Limited by Flange considereing flange as the weakest joint in piping system	
300	655	149	46		
400	635	204	44.6		
500	600	260	44.2		

Notes Releted to Pipe,Fittings,Flanges,Gasket and Stud Bolts -Nuts

1. Welded fittings shall be 100% radiographed.

2.All alloy steel stud bolts and nuts shall be hot dip galvanized or electrogalvanized with minimum coating as per spec.

3. Spectacle blinds and spacer sizes and rating that are not available in ASME B 16.48 shall be as per manufacturer standard. Design shall be submitted to company for review and approval

4. All pipe thread shall be as per ASME B 1.20.1

5. PMS to be read in conjuction with FS 2004 A and all the requirement of MR-01-75/ISO-15156-1/2/3 to complied.

6. Two jackscrew, 180 degree apart shall be provided in one of the flanges for all orifice flange and specified flange and spectacle blind.

7.Piggable portion of piping shall be critically checked for passage of pigs with respect to internal diameter of each segment of pipeline.

8. Weld Joint Factor for welded pipe shall be as per ASME B 31.4/31.8

Offshore Design Section Engineering Services IS0-9001:2000	PIPING MATERIAL SPECIFICATION				Sheet No.	2 of 2
	Piping Class	Material	C.A	Spec.No	Revision: 0	
	PB1N	# 300	CS-NACE	6mm	2004A,Rev 9	Page No. 120
	Design Code: ASME B 31.4/31.8 and other applicable Code NACE-MR-01-75/ISO-15156-1/2/3					
	Service	Corrosive Hydro Carbon Liquid and Vapour, Injection Water (Piping from from transition bend to Hinged closers Only)				

Branch Table as per API RP 14E

Run Pipe \ Branch Pipe	≤ 1	1-1.5	2	3	4	6	8	10	12	14	16	18	20	24	30
≤ 1	T														
1-1.5	T	T													
2	*	*	T												
3	*	*	T	T											
4	*	*	T	T	T										
6	*	*	W	T	T	T									
8	*	*	W	W	T	T	T								
10	*	*	W	W	W	T	T	T							
12	*	*	W	W	W	T	T	T	T						
14	*	*	W	W	W	W	T	T	T	T					
16	*	*	W	W	W	W	T	T	T	T	T				
18	*	*	W	W	W	W	W	T	T	T	T	T			
20	*	*	W	W	W	W	W	T	T	T	T	T	T		
24	*	*	W	W	W	W	W	W	T	T	T	T	T	T	
30	*	*	W	W	W	W	W	W	W	W	T	T	T	T	T

LEGEND	
*	Sockolet
W	Weldolet
T	TEE

Valve Data

Size(in)	0.5	0.75	1	1.5	2	3	4	6	8	10	12	14	16	18	20	22	24
Gate Valve																	
TAG	VG 45,SW				VG 69,FLANGED												
Rating	# 800				# 300,RF												
Plug Valve																	
TAG																	
Rating																	
Ball Valve																	
TAG	45,SW and VB 107,SW (Note-5				VB 69, Lever Operated							VB **, Gear Operated					
Rating	# 800				# 300, RF												
Globe Valve																	
TAG	VGL 45,SW				VGL 69												
Rating	# 800				# 300, RF												
Check Valve																	
TAG	VC 45,SW,Lift Check				VC 69,Swing Check/ VC 89 (Wafer Check, Note -1)												
Rating	# 800				# 300, RF												
Needle Valve																	
TAG	VN 9,SW																
Rating	# 800																
Butter Fly Valve																	
TAG																	
Rating																	

Notes Releted to Valve and Brach Connection

1. PMS to be read in conjuction with FS 2004 A.
2. Maximum temperature limit for all Ball Valve shall be 121 Degree C

Revision	Date	Description	Prepared By	Reviewed By	Approved By
Revision: 0	15.01.16	Issued For Bid	PS	AKM	SJ

	Offshore Design Section Engineering Services IS0-9001:2000				**PIPING MATERIAL SPECIFICATION**									Sheet No.		**1 of 2**	
					Piping Class			Material			C.A		Spec.No			Revision: 1	
					PD1N		# 600	CS-NACE			6mm		2004A,Rev 9			Page No.	121
					Design Code: ASME B 31.4/31.8 and other applicable Code NACE-MR-01-75/ISO-15156-1/2/3												
					Service: Corrosive Hydro Carbon Liquid and Vapour, Injection Water (Piping from from transition bend to Hinged closers Only)												
Pipe Data	ASME B 36.10																
Size(in)	0.5	0.75	1	1.5	2	3	4	6	8	10	12	14	16	18	20	22	24
O.D.mm	21.3	26.7	33.4	48.3	60.3	88.9	114.3	168.3	219.1	273.1	323.9	355.6	406.4	457.2	508	558.8	609.6
Sch.	XXS	XXS	XXS	XXS	160	160	120	Thickness shall be same as that of Pipe line for smooth Pigging									
WTmm	7.47	7.82	9.09	10.16	8.74	9.52	11.12	Thickness shall be same as that of Pipe line for smooth Pigging									
M.T (%)																	
TYPE	Seamless													LSAW with 100% Radiography			
MOC	ASTM A 106 Gr. B							API 5L Gr. X 60 or Same as Pipeline						API 5L Gr. 60 or same as pipeline			
Ends	PE				BE												
Fittings Data																	
Size(in)	0.5	0.75	1	1.5	2	3	4	6	8	10	12	14	16	18	20	22	24
TYPE	Socket Weld				Butt Weld, Seamless			Butt Welded, Seamless						Welded with 100% Radiography			
Rating	# 9000				160	160	120										
MOC	ASTM A 105 U.N.O				A 234 Gr. WPB, Seamless			MSS SP -75 Gr. WPHY rest portion of grade designation shall be compatible to pipe. U.N.O									
Elbow	ASMEB16.11				ASME B 16.9			MSS SP -75 and for piggable portion only 5D bends shall be used UNO.									
Tee	ASMEB16.11				ASME B 16.9			MSS SP -75									
Red.	ASMEB16.11				ASME B 16.9			MSS SP-75									
Cap	ASMEB16.11				ASME B 16.9			MSS SP-75									
Coupl	ASMEB16.11				ASME B 16.9			MSS SP-75									
Plug	ASMEB16.11				ASME B 16.9			MSS SP-75									
Elbowlet	MSS SP 97,ASTM A 105				MSS SP 97,ASTM A 105			ASTM A 694 Gr. rest portion of grade designation shall be compatible to pipe. U.N.O, MSS SP 97									
Sockolet	MSS SP 97,ASTM A 105				MSS SP 97,ASTM A 105			ASTM A 694 Gr. rest portion of grade designation shall be compatible to pipe. U.N.O, MSS SP 97									
Weldolet	MSS SP 97,ASTM A 105				MSS SP 97,ASTM A 105			ASTM A 694 Gr. rest portion of grade designation shall be compatible to pipe. U.N.O, MSS SP 97									
Nipple	MSS SP 95,Same as pipe				MSS SP 95MOC Same as pipe			MSS SP 95 MOC Same as pipe									
Swage	MSS SP 95,Same as pipe				MSS SP 95MOC Same as pipe			MSS SP 95 MOC Same as pipe									
Flange																	
Size(in)	0.5	0.75	1	1.5	2	3	4	6	8	10	12	14	16	18	20	22	24
TYPE	SW				WN			WN									
MOC	ASTM A 105				ASTM A 105			ASTM A 694 Grade designation shall be compatible to pipe. U.N.O									
FACE	RF, Smooth Finnished				RF, Smooth Finnished			RF, Smooth Finnished									
STD.	ASME B 16.5				B 16.5, But welding ends B 16.25			ASME B 16.5 with Butt Welding end as per ASME B 16.25									
Spectacle Blind/Spacer Blinds																	
Size(in)	0.5	0.75	1	1.5	2	3	4	6	8	10	12	14	16	18	20	22	24
MOC	ASTM A 105																
Spectacle	ASME B 16.48				ASME B 16.48							Spacer and blind as per ASME B 16.48					
Mechanical Joints																	
Stud Bolt	ASTM A 193 Gr. B7M				ASTM A 193 Gr. B7M												
Hex Nuts	ASTM A 194 Gr. 2HM				ASTM A 194 Gr. 2HM												
Gasket	B 16.20,4.5mm, SS Spiral wound with CNAF filler				ASME B 16.20,4.5mm, SS Spiral wound with CNAF filler												

Pressure-Temperature Rating				Maximum Hydrostatic Pressure	
Temp.,Deg F	Pressure, PSI	Temp,Deg C	Pressure, Kg/cm2	Pressure, psig	Pres.,Kg/cm2g
(-) 4 to 100	1480	(-) 20 to 38	104	2225 psig	157 Kg/cm2
200	1360	93	95.61	Limited by Flange considereing flange as the weakest joint in piping system	
300	1310	149	92.1		
400	1265	204	88.94		
500	1205	260	84.72		

Notes Releted to Pipe,Fittings,Flanges,Gasket and Stud Bolts -Nuts

1. Welded fittings shall be 100% radiographed.
2.All alloy steel stud bolts and nuts shall be hot dip galvanized or electrogalvanized with minimum coating as per spec.
3. Spectacle blinds and spacer sizes and rating that are not available in ASME B 16.48 shall be as per manufacturer standard. Design shall be submitted to company for review and approval.
4. All pipe thread shall be as per ASME B 1.20.1
5. PMS to be read in conjuction with FS 2004 A and all the requirement of MR-01-75/ISO-15156-1/2/3 to complied.
6. Two jackscrew, 180 degree apart shall be provided in one of the flanges for all orifice flange and specified flange and spectacle blind.
7.Piggable portion of piping shall be critically checked for passage of pigs with respect to internal diameter of each segment of pipeline.
8. Weld Joint Factor for welded pipe shall be as per ASME B 31.4/31.8

Offshore Design Section Engineering Services IS0-9001:2000	**PIPING MATERIAL SPECIFICATION**				Sheet No.	**2 of 2**
	Piping Class	Material	C.A	Spec.No	Revision: 1	
	PD1N	# 600	CS-NACE	6mm	2004A,Rev 9	Page No. 122
	Design Code: ASME B 31.4/31.8 and other applicable Code NACE-MR-01-75/ISO-15156-1/2/3					
	Service: Corrosive Hydro Carbon Liquid and Vapour, Injection Water (Piping from from transition bend to Hinged closers Only)					

Branch Table as per API RP 14E

LEGEND	
*	Sockolet
W	Weldolet
T	TEE

Run Pipe	≤ 1	1-1.5	2	3	4	6	8	10	12	14	16	18	20	24	30
≤ 1	T														
1-1.5	T	T													
2	*	*	T												
3	*	*	T	T											
4	*	*	T	T	T										
6	*	*	W	T	T	T									
8	*	*	W	W	T	T	T								
10	*	*	W	W	W	T	T	T							
12	*	*	W	W	W	T	T	T	T						
14	*	*	W	W	W	W	T	T	T	T					
16	*	*	W	W	W	W	T	T	T	T	T				
18	*	*	W	W	W	W	W	T	T	T	T	T			
20	*	*	W	W	W	W	W	T	T	T	T	T	T		
24	*	*	W	W	W	W	W	W	T	T	T	T	T	T	
30	*	*	W	W	W	W	W	W	W	W	T	T	T	T	T

Branch Pipe

Valve Data																	
Size(in)	0.5	0.75	1	1.5	2	3	4	6	8	10	12	14	16	18	20	22	24
Gate Valve																	
TAG	VG 45,SW				VG 71,FLANGED												
Rating	# 800				# 600,RF												
Plug Valve																	
TAG																	
Rating																	
Ball Valve																	
TAG	/B 45,SW and VB 107,SW (Note-5				VB 71, Lever Operated							VB **, Gear Operated					
Rating	# 800				# 600, RF												
Globe Valve																	
TAG	VGL 45,SW				VGL 71												
Rating	# 800				# 600, RF												
Check Valve																	
TAG	VC 45,SW,Lift Check				VC 71,Swing Check				VCS - 8, Swing Check Full Port								
Rating	# 800				# 600, RF												
Needle Valve																	
TAG	VN 9,SW																
Rating	# 800																
Butter Fly Valve																	
TAG																	
Rating																	

Notes Releted to Valve and Brach Connection

1. PMS to be read in conjuction with FS 2004 A.
2. Maximum temperature limit for all Ball Valve shall be 121 Degree C

Revision	Date	Description	Prepared By	Reviewed By	Approved By
Revision: 1	15.01.16	Issued For Bid	PS	AKM	SJ

Offshore Design Section Engineering Services IS0-9001:2000					**PIPING MATERIAL SPECIFICATION**									Sheet No.		**1 of 2**	
					Piping Class			Material			C.A	Spec.No				Revision:1	
					PE1N		# 900	CS-NACE			6mm	2004A,Rev 9				Page No.	123
					Design Code:ASME B 31.4/31.8 and other applicable Code NACE-MR-01-75/ISO-15156-1/2/3												
					Service: Corrosive Hydro Carbon Liquid and Vapour, Injection Water (Piping from transition bend to Hinged closers Only)												
Pipe Data	ASME B 36.10																
Size(in)	0.5	0.75	1	1.5	2	3	4	6	8	10	12	14	16	18	20	22	24
O.D.mm	21.3	26.7	33.4	48.3	60.3	88.9	114.3	168.3	219.1	273.1	323.9	355.6	406.4	457.2	508	558.8	609.6
Sch.	XXS	XXS	XXS	XXS	XXS	XXS	160	Thickness shall be same as that of Pipe line for smooth Pigging									
WTmm	7.47	7.82	9.09	10.16	11.07	15.24	13.49	Thickness shall be same as that of Pipe line for smooth Pigging									
M.T (%)																	
TYPE	Seamless													LSAW with 100% Radiography			
MOC	ASTM A 106 Gr. B							API 5L Gr. X 60 or Same as Pipeline						API 5L Gr. 60 or same as pipeline			
Ends	PE				BE												
Fittings Data																	
Size(in)	0.5	0.75	1	1.5	2	3	4	6	8	10	12	14	16	18	20	22	24
TYPE	Socket Weld				Butt Weld, Seamless			Butt Welded, Seamless						Welded with 100% Radiography			
Rating	# 9000				XXS	XXS	160										
MOC	ASTM A 105 U.N.O				A 234 Gr. WPB, Seamless			MSS SP -75 Gr. WPHY rest portion of grade designation shall be compatible to pipe. U.N.O									
Elbow	ASMEB16.11				ASME B 16.9			MSS SP -75 and for piggable portion only 5D bends shall be used UNO.									
Tee	ASMEB16.11				ASME B 16.9			MSS SP -75									
Red.	ASMEB16.11				ASME B 16.9			MSS SP-75									
Cap	ASMEB16.11				ASME B 16.9			MSS SP-75									
Coupl	ASMEB16.11				ASME B 16.9			MSS SP-75									
Plug	ASMEB16.11				ASME B 16.9			MSS SP-75									
Elbowlet	MSS SP 97,ASTM A 105				MSS SP 97,ASTM A 105			ASTM A 694 Gr. rest portion of grade designation shall be compatible to pipe. U.N.O, MSS SP 97									
Sockolet	MSS SP 97,ASTM A 105				MSS SP 97,ASTM A 105			ASTM A 694 Gr. rest portion of grade designation shall be compatible to pipe. U.N.O, MSS SP 97									
Weldolet	MSS SP 97,ASTM A 105				MSS SP 97,ASTM A 105			ASTM A 694 Gr. rest portion of grade designation shall be compatible to pipe. U.N.O, MSS SP 97									
Nipple	MSS SP 95,Same as pipe				MSS SP 95MOC Same as pipe			MSS SP 95 MOC Same as pipe									
Swage	MSS SP 95,Same as pipe				MSS SP 95MOC Same as pipe			MSS SP 95 MOC Same as pipe									
Flange																	
Size(in)	0.5	0.75	1	1.5	2	3	4	6	8	10	12	14	16	18	20	22	24
TYPE	SW				WN			WN									
MOC	ASTM A 105				ASTM A 105			ASTM A 694 Grade designation shall be compatible to pipe. U.N.O									
FACE	RTJ-Note 7				RTJ, Note 7			RTJ, Note 7									
STD.	ASME B 16.5				B 16.5, But welding ends B 16.25			ASME B 16.5 with Butt Welding end as per ASME B 16.25									
Spectacle Blind/Spacer Blinds																	
Size(in)	0.5	0.75	1	1.5	2	3	4	6	8	10	12	14	16	18	20	22	24
MOC	ASTM A 105																
Spectacle	ASME B 16.48				ASME B 16.48							Spacer and blind as per ASME B 16.48					
Mechanical Joints																	
Stud Bolt	ASTM A 193 Gr. B7M				ASTM A 193 Gr. B7M												
Hex Nuts	ASTM A 194 Gr. 2HM				ASTM A 194 Gr. 2HM												
Gasket	0,OCT ring of Soft Iron with Max. 9				ASME B 16.20,OCT ring of Soft Iron with Max. Hardness of 90BHN												

Pressure-Temperature Rating				Maximum Hydrostatic Pressure	
Temp.,Deg F	Pressure, PSI	Temp,Deg C	Pressure, Kg/cm2	Pressure, psig	Pres.,Kg/cm2g
(-) 4 to 100	2220	(-) 20 to 38	156	3350 psig	236 Kg/cm2
200	2035	93	143.07	Limited by Flange considereing flange as the weakest joint in piping system	
300	1965	149	138.2		
400	1900	204	133.6		
500	1810	260	127.2		

Notes Related to Pipe,Fittings,Flanges,Gasket and Stud Bolts -Nuts

1. Welded fittings shall be 100% radiographed.
2.All alloy steel stud bolts and nuts shall be hot dip galvanized or electrogalvanized with minimum coating as per spec.
3. Spectacle blinds and spacer sizes and rating that are not available in ASME B 16.48 shall be as per manufacturer standard. Design shall be submitted to company for review and approval.
4. Two jackscrew, 180 degree apart shall be provided in one of the flanges for all orifice flange and WNRTJ flanges above 3" size and specified spectacle blind.
5. All pipe thread shall be as per ASME B 1.20.1
6. PMS to be read in conjuction with FS 2004 A.
7. Gasket Contact Surface shall have maximum roughness of 63AARH
8. Minimum RTJ groove hardness shall be 120BHN
9. Octagonal (OCT) ring shall be Hot Dip Galvanized or electrogalvanized
10.Piggable portion of piping shall be critically checked for passage of pigs with respect to internal diameter of each segment of pipeline.
11. Weld Joint Factor for welded pipe shall be as per ASME B 31.3

Offshore Design Section Engineering Services IS0-9001:2000	PIPING MATERIAL SPECIFICATION				Sheet No.	2 of 2
	Piping Class		Material	C.A	Spec.No	Revision:1
	PE1N	# 900	CS-NACE	6mm	2004A,Rev 9	Page No. 124
	Design Code:ASME B 31.4/31.8 and other applicable Code NACE-MR-01-75/ISO-15156-1/2/3					
	Service:	Corrosive Hydro Carbon Liquid and Vapour, Injection Water (Piping from transition bend to Hinged closers Only)				

Branch Table as per API RP 14E

LEGEND	
*	Sockolet
W	Weldolet
T	TEE

Run Pipe	≤ 1	1-1.5	2	3	4	6	8	10	12	14	16	18	20	24	30
≤ 1	T														
1-1.5	T	T													
2	*	*	T												
3	*	*	T	T											
4	*	*	T	T	T										
6	*	*	W	T	T	T									
8	*	*	W	W	T	T	T								
10	*	*	W	W	W	T	T	T							
12	*	*	W	W	W	T	T	T	T						
14	*	*	W	W	W	W	T	T	T	T					
16	*	*	W	W	W	W	T	T	T	T	T				
18	*	*	W	W	W	W	W	T	T	T	T	T			
20	*	*	W	W	W	W	W	T	T	T	T	T	T		
24	*	*	W	W	W	W	W	W	T	T	T	T	T	T	
30	*	*	W	W	W	W	W	W	W	W	T	T	T	T	T

Branch Pipe

Valve Data

Size(in)	0.5	0.75	1	1.5	2	3	4	6	8	10	12	14	16	18	20	22	24
Gate Valve																	
TAG	VG 47,SW				VG 73,FLANGED												
Rating	# 1500				# 900,RTJ												
Plug Valve																	
TAG																	
Rating																	
Ball Valve																	
TAG	Use Gate Valve, VG 47				VB 73, Lever Operated							VB **, Gear Operated					
Rating	# 1500				# 900, RTJ												
Globe Valve																	
TAG	VGL 44,SW				VGL 72												
Rating	# 1500				# 900, RTJ												
Check Valve																	
TAG	VC 47,SW,Lift Check				VC 73,Swing Check			VCS - 9, Full Port Swing Check									
Rating	# 1500				# 900, RTJ												
Needle Valve																	
TAG	VN 10,SW																
Rating	# 1500																
Butter Fly Valve																	
TAG																	
Rating																	

Notes Releted to Valve and Brach Connection

1. PMS to be read in conjuction with FS 2004 A.
2. Maximum temperature limit for all Ball Valve shall be 121 Degree C

Revision	Date	Description	Prepared By	Reviewed By	Approved By
Revision:1	15.01.16	Issued For Bid	PS	AKM	SJ

Structure Functional Specification

WHRU REPLACEMENT PROJECT

VOLUME – IIIA

OIL AND NATURAL GAS CORPORATION LIMITED
INDIA

INDEX

STRUCTURE FUNCTIONAL SPECIFICATION

S/N	FS No.	Description
1	FS-2005 Rev.9	Specification For Protective Coating
2	FS-6001F Rev.14	General Specification For Materials, Fabrication And Installation Of Structure

SPECIFICATION FOR PROTECTIVE COATING

Prepared/Revised by	Reviewed by	Approved by	Pages	Date	Rev. No.
MRS	RMK	HMG		15.02.2012	3
KCD /MRS	RMK	GRP	67	27.03.2012	4
MRS	SKJ	RMK	65	12.12.2014	5
MRS	SKJ	RMK	64	05.03.2015	5.1
RCS	MRS	RKJ	65	25.08.2016	6
KKD	MRS	RKJ	71	01.08.2018	7
MK	GM	KKD	71	26.11.2019	8
GG	GM	KCD	78	12.12.2022	9

CONTENTS

1.0. INTRODUCTION

1.1 Scope / General

1.2 Definitions

2.0. CODES AND STANDARDS

2.1 Mandatory Statutory Requirements

2.2 Codes and Standards & Regulations

2.2.1 The Society for Protective Coatings (SSPC)

2.2.2 American Society for Testing and Materials (ASTM)

2.2.3 Indian Standards (IS)

2.2.4 British Standard (BS)

2.2.5 International Standard of Organization (ISO)

2.2.6 Occupational Safety & Health Act (OSHA)

2.2.7 NACE Standard

2.2.8 UL Standard

2.2.9 NORSOK Standard

2.2.10 American Welding Society (AWS)

2.2.11 RAL Colour Chart

2.2.12 Abbreviations and Definitions

3.0. GENERAL

3.1 Blasting / Coating Exclusions

3.2 Standard Coating

3.3 Equipment Cleaning

3.4 Flanges

3.5 Piping Spools

3.6 Seal Welding

3.7 Over spray

3.8 Nozzles through Insulation

3.9 Coated Bolts

4.0. SAFETY

5.0. ENVIRONMENTAL REQUIREMENTS

6.0. SURFACE PREPARATION

6.1 General

6.2 Requirements of Blasting

6.3 Pre – Blasting Preparation

6.3.1 Rough Edges

6.3.2 Weld Flux and Splutter

6.3.3 Surface Cleaning

6.3.4 Chemical Contamination

6.3.5 Equipment Protection

6.4 Blasting Operations

6.4.1 Weather conditions

6.4.2 Preliminary Blasting

6.4.3 Blasting and Painting

6.4.4 Post – Blasting Procedure

6.5 Blasting Equipment

6.5.1 Compressed Air

6.5.2 Nozzle

6.5.3 Power Tools

6.5.4 Shot Blasting Equipment

6.6 Blasting Abrasive

6.6.1 Abrasive

6.6.2 Shot Blasting Material

6.6.3 Alternative methods of Surface Preparation

7.0. COATING APPLICATION

7.1 General Application

7.1.1 Supply and Storage

7.1.2 Pot Life

7.1.3 Mixing

7.1.4 Unblasted Surfaces

7.1.5 Application Requirements

7.2 Cleanliness

7.2.1 Temperature

7.2.2 Weather Conditions

7.2.3 Coats

7.3 Brush application

7.3.1 General Requirement

7.3.2 Equipment for brush application

7.3.3 Procedure for Brush Application

7.4 Spray application

7.4.1 Equipment

7.4.2 Procedures

7.4.3 Airless Spray Equipment

7.4.4 Field Weld

7.4.5 Tie / Sealer Coat

7.5 Roller Application

7.6 Overspray and Drip Protection

7.7 Safety Equipment

7.8 Handling and shipping of coated items

8.0. REPAIR OF DAMAGED AREAS

8.1 Repair Procedure for Coating Damage

8.1.1 Top Coat

8.1.2 Base Coat

9.0. GALVANIZING

9.1 Galvanizing Standard

9.2 Surface Preparation

9.3 Zinc Coating Weight

9.4 Surface Finish

9.5 Welding

9.6 Damaged Items

9.7 Reinstatement of Damaged Surfaces

9.8 Painting Galvanized Surfaces

9.9 Painting of Aluminum Helideck

9.10 Painting Stainless Steel (wherever applicable)

10.0. INSPECTION & TESTING

10.1 Quality Control

10.2 Inspection and Testing Requirements

10.3 Role of Paint Vendor's Representative

10.4 Qualification of Contractor's QC personnel at Fabrication Yard (Inspectors, supervisors, foremen)

10.5 Qualification of passive fire protection operators

10.6 Equipment and Material

10.7 Inspection of Instruments

10.7.1 Calibration of Equipment

10.7.2 Dry Film Thickness

10.8 Repair

10.9 Maintenance

10.10 Roll of Company representative/Inspector/Company appointed CA/TPI

10.11 **Surface preparation, Coating application & field Test Report**

11.0. PAINT MATERIALS

11.1 Table: Required Characteristics of Paint Materials

12.0. APPROVED VENDORS' RECOMMENDED LIST OF PAINT MATERIALS

12.1 Table: Approved Vendor's Recommended Product

13.0. COATING SYSTEMS

13.1 Scope

13.2 Section A: Exterior surfaces of offshore structure

13.2.1 **Coating System No.1**: Atmospheric Zone – I (from Splash Zone to Bottom face of cellar deck plating)

13.2.2 **Coating System No.2**: Atmospheric zone – II (From Cellar Deck Plating & above)

13.2.3 **Coating System No.3**: In Splash Zone & Submerged Zone

13.2.4 **Coating System No.4**: Galvanizing

13.2.5 **Coating System No.5**: Painting of Galvanized members, Aluminum Helideck, Stainless Steel

13.3 Section B: Process vessels and piping, manifolds, valves etc.

13.3.1 Submersible pumps

13.3.2 Piping & other Equipment

13.3.3 Flanges

13.4 Section C: Compressors, gas turbine, generators, engines etc.

13.4.1 Painting when Equipment painting not satisfactory

13.4.2 Painting when blast cleaning is not permissible

13.4.3 Painting of Equipment for surface temperature upto 400°C.

13.4.4 Painting of Equipment for surface temperature above 400°C

13.5 Section D: Piping internal surface of tanks & process vessels

13.5.1 **Coating System No.6**: Painting of internal surface of tanks & process vessels

Coating System No.6A: Salt water service

Coating System No.6B: Hydrocarbon service

Coating System No.6C: Fresh Water Service

13.6 Section E: Carbon Steel Metal Building

13.6.1 Equipment Skid

13.6.2 Structural framing/sheeting/plating

13.6.2.1 Exposed portion

13.6.2.2 **Coating System No.7**: Unexposed portion

13.7 Section F: Antiskid Painting

Coating System No. 8: Antiskid Painting

13.8 Section G: Passive Fire Protection

13.8.1 **Coating System No.9**: Epoxy Based Passive Fire Protection system (Epoxy Intumescent Coating)

13.9 Deleted

13.10 Section H: Miscellaneous items

13.10.1 **Pipe Support: i-Rod Pipe Support System**

13.10.2 **Coating System No.10**: Painting of carbon steel valves

13.11 Section I: Extension & Modification on Old Platform and Repair & Maintenance Painting

13.11.1 Evaluation of condition monitoring

13.11.2 Maintenance Painting system (applicable for protective coating of wellhead/ process/ LQ platform projects)

13.12 Miscellaneous Accessories

13.13 Handling and shipping of coated items

14.0. THERMALLY SPREAD ALUMINIUM COATING (TSAC)

15.0. COLOUR SCHEDULE

15.1 List of items to be painted

15.2 Pipe colour coding

15.3 Attachment for Pipe colour coding

16.0. RECOMMENDED LIST OF PAINT MANUFACTURER

17.0. PROCEDURE FOR APPROVAL OF NEW COATING MATERIAL

18.0. PERFORMANCE GUARANTEE OF PROTECTIVE COATING

1.0 INTRODUCTION

1.1 Scope

This specification covers the minimum requirements governing surface preparation, selection and application of the protective coating system to be used on the interior and exterior surfaces of all types of production facilities including structural steel, vessels, piping and equipment on offshore platforms.

Individual equipment specifications and /or drawings, when furnished, are to be used with these specifications. If conflict exists, the individual specifications and/or drawings shall govern. This functional specification is applicable for both green field projects/job as well as brown field projects/job.

It includes the requirements with respect to protection against corrosion of both Ferrous and non-ferrous metals of all types of production facilities including structural Steel, vessels, piping and equipment on offshore platforms, SBMs.

This specification also covers the performance-based coating standard and is Applicable to painting and coating, for new construction, modifications and Maintenance of offshore facilities. All paint and coating systems to be used shall meet the qualification requirements and the minimum coating system requirements as specified in this specification.

The coating systems to be used in accordance with this specification shall be Suitable for a Marine environment C5-M, High Durability (H) as specified in ISO 12944, NORSOK M-501 & NACE SP 0108.

1.2 Definitions

The following definitions shall apply:

COMPANY : Shall mean ONGC or the designated representative.

CONTRACTOR : Shall mean the party contracted to perform the work in accordance with the drawings, specifications and work scope.

2.0 CODES AND STANDARDS

2.1 Mandatory Statutory Requirements

This document has been prepared to the International Standards detailed within. The CONTRACTOR shall ensure that the Work is executed in accordance with international standards, Statutory & Regulatory requirements.

2.2 Codes and Standards & Regulations

The requirements of the latest published versions of the following listed Codes, Recommended Practices. Specifications and standards shall be met.

2.2.1 Steel Structure Painting Council (SSPC) (Latest Revision)

SSPC-PA1	Shop, Field and Maintenance Painting of Steel.
SSPC-PA2	Measurement of Dry Coating Thickness with Magnetic Gauges
SSPC-SP1	Solvent Cleaning
SSSC-SP2	Hand Tool Cleaning
SSPC-SP3	Power Tool Cleaning
SSPC-SP5	White Metal Blast Cleaning
SSPC-SP6	Commercial Blast Cleaning
SSPC-SP7	Brush –Off Blast Cleaning
SSPC-SP10	Near White Blast Cleaning
SSPC-SP11	Power Tool Cleaning to bare metal
SSPC-SP12	Surface Preparation & cleaning of Steel and Other Hard material by High and Ultra High Pressure Water Jetting prior to recoating
SSPC-AB1	Mineral and Slag Abrasive
SSPC-AB3	Ferrous Metallic Abrasive
SSPC-SP20	zinc rich coating Type-I(Inorganic) & Type-II (Organic)
SSPC-SP COM	Surface Preparation and Abrasives Commentary, SSPC Painting Manual, Volume 2, “Systems and Specifications”
SSPC VIS-1	Guide and Reference Photographs for Steel Surfaces Prepared by Dry Abrasive Blast Cleaning
SSPC Vol.2	SSPC Painting Manual

2.2.2 American Society for Testing and Materials (ASTM) (Latest Revision)

ASTM A123	Standard Specification for Zinc (Hot-Dip Galvanized) Coatings on Iron and Steel Products
ASTM A153	Standard Specification for Zinc-Coating (Hot-Dip) on iron and Steel Hardware
ASTM D4228	Standard practice for qualification of coating applicators for application of coating on steel surfaces.
ASTM B117	Salt Spray Test
ASTM G8	Cathodic Disbonding Test
ASTM G50	Standard practice for conducting atmospheric corrosion test
ASTM G53	Weathering Test (Part B)
ASTM D520	Standard Specification for Zinc Dust Pigment (Metallic Zinc Powder)
ASTM D523	Specification for Gloss
ASTM D610	Standard Practice for evaluation degree of rusting of painted steel surfaces

ASTM C 633	Test Method for Adhesive/Cohesive Strength of Flame Sprayed Coating
ASTM D1200	Viscosity
ASTM D1640	Drying time
ASTM D1653	Standard test method for evaluation of painted or quoted specimens subject to corrosive environment
ASTM D2247	relative Humidity Test
ASTM D2697	Volume of Solids
ASTM D3359	Standard test method for measuring adhesion by tape test.
ASTM D4060	Abrasion Resistance of Coating
ASTM D4285	Standard Test Method for Indicating Oil or Water in compressed air
ASTM D4417	Test Method for field measurement of surface profile of Blasted steel
ASTM D4541	Test Method for Pull-off Strength of Coating Using Portable Adhesion Testers
ASTM D4752	MEK Test for Testing of Zinc Silicate Paint
ASTM D4940	Standard Test Method for conductometric Analysis of water soluble ionic contamination of Blasting Abrasive
ASTM D5894	Standard test method for evaluating drying or curing during film. Corrosion resistance under cyclic condensation/UV
ASTM D6386	Standard Practice for Preparation of Zinc (Hot-Dip Galvanized) Coated Iron and Steel Product and Hardware Surfaces for Painting
ASTM E119	Standard Test Methods for Fire Test of Building Construction and Materials.
ASTM E1529	Standard Test Methods for Effect of Large Hydrocarbon Pool Fires on Structural Members and Assemblies

2.2.3 Indian Standards (Latest Revision)

IS 5	Colours for Ready Mixed Paints and Enamels
IS 2379	Pipelines Identification Color Code

2.2.4 British Standard (Latest Revision)

BS 476: Part 20/21 Intumescent Coating
BS 2569: Specification for Sprayed Metal Coating
BS 3900 Part G7 Heat Resistance Test

2.2.5 International Standards Organization (Latest Revision)

ISO –898	International Standard for Mechanical Properties of fasteners made of carbon steel and alloy steel
ISO –8501	International Standard for Preparation of Surface
ISO-8502-6	Preparation of steel substrates before application of paints & related products Tests for the assessment for surface cleanliness-:Part-6:Extraction of soluble contaminants Analysis: The Bressle Method
ISO –8504	Preparation of steel substrates before application of paints and related products
ISO 1461	Hot dip galvanized coating on fabricated iron and steel articles-Specification and test methods
ISO 14713	Protection against corrosion of iron and steel structure-zinc and aluminum coating.
ISO 4624	Adhesion test of paint
ISO 12944	A Global Corrosion standard
ISO 4628	Evaluation of degradation of paint coating
ISO 834	Hydrocarbon Resistance Design (PFP)
ISO 20340	Paints and varnishes – Performance requirements for protective paint systems for offshore and related structures.
ISO 4628-6	Paints and varnishes – Evaluation of degradation of paint coatings – Designation of intensity, quantity and size of common types of defect – Part 6: Rating of degree of chalking by tape method

2.2.6 Occupational Safety and Health Act

OSHA	Occupational Safety and Health Act

2.2.7 NACE Standards (Latest Revision)

NACE SP0188	Discontinuity (Holiday) Testing of New Protective Coatings on Conductive Substrates
NACE Standard RP0287	Field Measurement of Surface profile Measurement of abrasive blast cleaned steel surfaces using a replica tape.
NACE RP0198	The control of Corrosion Under Thermal Insulation & Fire Proofing Materials-A System Approach
NACE Standard RP 0176-2003	Corrosion control of Steel Fixed Offshore Platforms Associated with Petroleum Production
NACE SP 0108	Corrosion control of Offshore Structure by protective coating
NACE 012	Specification for Application of Thermally Sprayed Coatings (Metallizing) of Aluminum, Zinc, and Their Alloys and Composites for the Corrosion Protection of Steel

2.2.8 Underwriters Laboratories

UL1709	Hydrocarbon Fire Resistant Design (PFP)

2.2.9 NORSOK Standard

M-501	Surface Preparation and Protective coating
M-001	Material Selection

2.2.10 American Welding Society (AWS)

AWS C.2.17	Recommended Practice for Electric Arc Spray
AWS C.2.18	Guide for Protection of steel with Thermal Spray Coating of Aluminium ,Zinc and Their alloys and composites
AWS C.2.23	Specification for Application of Thermally Sprayed Coatings (metalizing) of aluminium ,Zinc and Their alloys and composites for corrosion protection of steel

2.2.11 RAL 840 HR ACQPA: COLOUR CHART

2.2.12 Abbreviations and Definitions

APAS	Australian Paint Approval Scheme
ASTM	The American Society for Testing and Materials
C	Coating Thickness of metallic Zn (HDG coating)
COT	College of Occupational Therapists, (UK)
CP	Cathodic Protection DFT Dry Film Thickness
CPS	coating procedure specification
CPT	coating procedure test
CSDS	coating system data sheet
DFT	Dry Film Thickness
GRP	Glass Reinforced Plastic (fiber glass)
HB	High Build Epoxy
HDG	Hot-Dip Galvanized
HP	High Pressure (as in Water Washing at pressures above 300 Bar)
ITP	Inspection and Test Plan µm Micron
IMO	International Maritime Organization
ISO	International Organization for Standardization
MSDS	Material Safety Data Sheet
MEK	methyl ethyl ketone
MSC	Maritime Safety Committee
NACE	National Association of Corrosion Engineers
NSF	National Science Foundation
OH&S	Occupational Health and Safety
PFP	Passive Fire Protection
PIG	Paint Inspection Gauge

PPE	Personal Protection Equipment
PSPC	Performance Standard for protective Coatings
QA	Quality Assurance as defined by ISO 9001 and ~~9002 Quality Systems~~
QC	Quality Control of production processes by activity
RH	Relative Humidity
S/S	Stainless steel Supplier
UHP WJ	Ultra High Pressure Water Jetting (> 2000 Bar)
UL	Underwriters Laboratories
VOC	volatile organic compound
WB-IZS	Water Borne - Inorganic Zinc Silicate
WFT	Wet Film Thickness

3.0 GENERAL

3.1 Selection of Coating systems and application procedure shall be made with due consideration to conditions during fabrication, installation, and service of Installation.

All painting activities shall be incorporated in the fabrication plan.

Details of Management, Inspectors, operators, facilities, equipments and qualified procedures shall be established and document before commencing work.

Following items shall not be coated unless otherwise specified.

- Fibre-glass
- plastic or other non-metallic finish
- Equipments, valves, etc. having factory coated finish
- Indicators
- Sprinklers, fusible plugs and fire detectors
- Control Valve Stems
- Stainless Steel Control Panels
- Stainless Steel Tubing and pipe – work
- Cupro-Nickel (CuNi) pipe work
- Glass Reinforced Epoxy (GRE) pipe work

The following specific items shall not be coated and shall be protected from blasting and coating being applied to adjacent equipment

- Bearings and seals
- Flange mating faces, Raised Face (RF) and Ring Type Joint (RTJ) and flat faced
- Instrument dials and/or cases
- Cable trays and cables
- Level gauge glasses
- Nameplates Shafts and similar polished or machined surfaces Instrument Tags and Valve Position.

3.2 Standard Coating

The manufacturer's standard coating shall be used for the following equipment

- Indoor electrical equipment
- Instrument and control panels
- Insulated rotating equipment

3.3 Equipment Cleaning

The following equipment shall be cleaned with biodegradable, water soluble cleaner and an epoxy primer shall be applied (tie-coat) to the manufacturer's standard coatings prior to the specified intermediate coat.

- Fan and blower housing
- Outdoor electrical equipment
- Engines and electric motors
- Pumps, compressors and other non-insulated rotating equipment
- Control and relief valves

Equipment shall be recoated as specified if the coating system applied by equipment manufacturer/packager does not comply with this specification or if coating repairs is necessary.

3.4 Flanges

Flanges on piping and valves (including control and relief valves) shall have a primer coat applied to bolt holes and the non-contact area of the face prior or being made-up. After make-up of these connections intermediate and finish coats shall be applied. Flanged ends shall have a finish coat as required in this Specification. Flange faces must not be coated.

3.5 Piping Spools

Primer and intermediate coatings and finish coat as per clause 13.2.2 shall be applied to spools pre-fabricated for offshore installation. If these spools have an end prepared for field welding, the coatings shall stop 150 mm from the prepared end.

3.6 Seal Welding

Where enclosed or inaccessible areas cannot be adequately painted, the areas shall be completely enclosed and seal welded. Small areas inaccessible to blasting and painting that cannot be boxed by welding shall be filled with epoxy mastic, caulking compound or other suitable filler to prevent retention of dirt and moisture.

3.7 Overspray

Adjacent structures, equipment and all other items shall be protected from blasting, over-spray and drips with tarpaulin, plastic, tapes etc.

3.8 Nozzles Through Insulation

Flanged nozzles, man ways, platform clips, saddles and other attachments that extend through insulation shall be coated in accordance with the coating schedule for equipment and piping.

3.9 Coated Bolts

Galvanized bolts, studs and nuts, where used to bolt up piping, valves etc. or otherwise used to connect painted items, shall receive a top coat of paint over exposed areas after the connections are made. And shall be top coated with anti rust grease.

4.0 SAFETY

Safety conditions shall be met, as required by the Occupational Safety and Health Act (OSHA) or other governing bodies, as well as those that are the deemed necessary.

Particular care must be exercised when working in close or confined spaces, especially when spraying. The maximum allowable concentration of solvent in the air shall not be exceeded. Refer to the manufacturer's recommendations to determine the maximum allowable concentration value. When volatile solvents are flammable, the concentration in air shall be kept below 25 percent of the lower explosive limit by use of adequate exhaust or ventilation facilities.

5.0 ENVIRONMENTAL REQUIREMENTS

The contractor will recognize COMPANY's commitment to preserving the environment and shall comply with local codes and standards for transporting, storing, and disposing of hazardous materials and hazardous wastes.

Upon completion of the job, the contractor shall notify the COMPANY of the volume and type of hazardous waste generated.

Upon completion of the job, all non-hazardous wastes, such as empty paint cans, clothes blasting abrasives and equipment, shall be removed by the contractor from the job sites and properly disposed.

6.0 SURFACE PREPARATION

6.1 General

The surface preparation procedures and requirements except for galvanizing and cadmium plating shall be in accordance with Steel Structural Painting Council (SSPC) - SP5, SP6, SP7 & SP10 and ISO–8501-1.

All fabrication and assembly shall be completed before surface preparation is taken up. Blast and application of coating to structural and piping items prior to assembly will be permitted provided surface preparation for splice ends are taken up by portable blasting tools before application of prime coat. All field splice surface preparation for Structure & Piping Items shall be carried out using portable blasting tools at field. All welding slag, weld spatters and burrs shall be removed prior to blasting. All bolt holes shall be drilled and their edges smoothed prior to blasting.

First step of surface preparation: Solvent cleaning is to be taken up for any surface preparation.

Second step of surface preparation: Steel surface shall be blast cleaned to develop specific anchor pattern/profile to develop efficient bond between paint & steel surface using blasting tool or portable blasting tools for all Structural, Piping & Pressure Vessel items.

Surface preparation for Equipment, Equipment Manufacturer's procedure shall be submitted for approval of Company.

In case of modification work on Old Platform or Maintenance work, portable blasting tool shall be used for surface preparation. However, use of Power Tool / Hand Tool cleaning methodology can be used with approval of Company establishing constraint in use of portable blast tool and shall be applicable for specific location (not for as whole of the work/project) only.

6.2 Requirements of Blasting

Only dry blasting procedures are allowed. Definitions of and requirements for, the various methods of surface cleaning are given below:

A. White Metal Blast: As per SSPC SP5 & visual reference Sa3 as per ISO 8501-1.

B. Near-White Blast: As per SSPC SP10 & visual reference Sa2.5 as per ISO 8501-1.

C. Commercial Blast: As per SSPC SP6 & visual reference Sa2 as per ISO 8501-1.

D. Brush-off Blast: As per SSPC SP7 & visual reference Sa1 as per ISO 8501-1

6.3 Pre Blasting preparation

6.3.1 Rough Edges

Sharp edges, fillets, corners and welds shall be rounded or smoothened by grinding (minimum radius 2 mm).Hard surface layers (e.g. resulting from flame cutting) shall be removed by grinding prior to blast cleaning according to ISO 8501-3, Grade-3.

All surfaces should be washed with clean fresh water prior to blast cleaning.

Any major surface defects, particularly surface laminations or scabs detrimental to the protective coating system shall be removed by suitable dressing. Where such defects have been revealed during blast cleaning, and dressing has been performed, the dressed area shall be re-blasted to the specified standard. Surface pores, cavities etc. shall be removed by suitable dressing or weld repair.

6.3.2 Weld Flux and Spatter

Weld flux, slag spatter, slivers etc. shall be ground smooth before blasting. Welding surface imperfections shall be removed and surface profile shall be prepared as per ISO 12944-3.

Any surface on which grinding is done shall be spot blast cleaned or power tool cleaned to obtain required anchor pattern.

All welds shall be inspected and if necessary repaired prior to final blast cleaning of the area.

6.3.3 Surface Cleaning

Prior to blasting, all deposits or grease or oil shall be removed from the surface in accordance with SSPC-SP1 Solvent Cleaning using biodegradable water soluble cleaner.

6.3.4 Chemical Contamination

All chemical contamination shall be neutralized and/or flushed off prior to any other surface preparation.

6.3.5 Equipment Protection

Items such as motors, machined surfaces, gauges, electrical and instrumentation items tags and nameplates, stainless steel galvanized steel, aluminum, brass, plated surfaces etc. shall be protected to prevent damage or contamination during blasting or painting.

Prior to blasting, openings on engines, pump, vessels, piping etc. shall be effectively sealed to prevent abrasive entering and damaging internal components. All packaged equipment shall be covered and special care taken to cover and seal all instrumentation.

6.4 Blasting Operations

6.4.1 Weather conditions

Blast cleaning shall not be done on any surface that is moist, or that may become moist, before the application of a primer.

No blasting is permitted when the steel temperature is less than 3°C above the dew point, as measured by a sling hydrometer, or when the relative humidity of the air is more than 85 %.

6.4.2 Preliminary Blasting

If blasting is performed at night, the surfaces shall be re-blasted the following day to provide the specified surface preparation standard and the anchor profile required for the specified coating system.

6.4.3 Blasting and Painting

Blasting shall not be done adjacent to painting operations or coated surfaces that are not fully dry. Blasting shall overlap previously coated surfaces by at least 150 mm.

6.4.4 Post – Blasting Procedure

The surface to be coated shall be clean, dry, free from oil/grease, and have the **specified anchor pattern/ roughness** and cleanliness until the priming coat is applied. Blast cleaned steel surfaces shall not be touched by bare hands.

Chloride contamination shall be checked **on the blasted steel surface prior to coating application** using Salt Contamination Meter - SCM 400 / **Bresle** patches / Quantab strips. Maximum permissible limit shall be 20 mg/m^2 for external surface & 50 mg/m^2 for internal of vessels.

Testing of soluble chloride ion content shall be carried out at least on each component, once per 200m^2 and a minimum of three times per shift during the progress of work. Special attention shall be given to areas where water has been trapped and dried out.

The blast cleaned surface shall be rendered dust free and coated with the specified primer a soon as possible to avoid formation of oxidation on the surface, but **in any case within four hours from the time of blasting**, and at least one hour prior to sunset on the same day. Any steel surface not primed within these limits or that is wet shall be re-blasted.

No acid washes or other cleaning solutions or solvents shall be used on metal surfaces after they are blasted. This includes washes intended to prevent rusting.

All areas around the intended paint surface shall be cleaned of sand prior to coating. Drains shall be purged of sand and flushed.

Biodegradable water – soluble cleaning solution used to clean previously painted surfaces shall not lift softens or otherwise damages the existing coating.

6.5 Blasting Equipment

6.5.1 Compressed Air

The air compressor shall be capable of maintaining a minimum of 700 kpa (7 kg/cm^2 or 100 psi) air pressure at each blasting nozzle.

The compressed air supply shall be free of water and oil. Adequate separators and traps shall be provided on the equipment, which shall be regularly purged of water and oil to maintain efficiency.

6.5.2 Nozzle

The nozzle shall be a 10 mm (maximum) internal diameter venture style nozzle.

6.5.3 Power Tools (Use can be permitted with specific approval for specific location)

Power tools may be used to obtain a metal surface finish as per SSPC SP11 where blasting is not possible, or on items which might be damaged by blasting.

6.5.4 Shot Blasting Equipment

Shot blasting equipment may be used for specific applications. Shot shall be changed as required to maintain the angular profile requirement.

6.6 Blasting Abrasive

6.6.1 Abrasive

The abrasive shall be as per SSPC-AB-1. The abrasives shall be copper slag, steel balls, garnet or coal slag and shall be free of contamination of dust and chlorides to produce the required anchor profile and graded as to be free from clay, silt or other matter likely to become embedded in the steel surface. Abrasives which have a tendency to shatter and adhere or embed in the steel surface shall not be acceptable. Recycled abrasive shall not be used. Use of silica sand is not permitted.

6.6.2 Shot Blasting Material

Shot blasting material shall pass through a 16 mesh screen. At least 15% steel grit shall be mixed with the graded shot to remove any rust, scale or other impurities pined into the surface by the shot. Shot blasting material is limited to iron, steel or synthetic shot which is applied by compressed air nozzles or centrifugal wheels. Shot blasting material shall be checked at least two times a week for replacement of abraded material.

6.6.3 Alternative methods of Surface Preparation

a) For Blast Cleaning

Power Tool Cleaning shall be confined to minor areas.

Unless otherwise specified it shall be carried out in accordance with the requirement of ISO 5404-3. Power Tool Cleaning (grinding) to bare metal shall be done in accordance with SSPC SP-11.

If Power Tool Cleaning is not feasible the surface cleanliness shall as a minimum, meet visual standard PSt3 in accordance with ISO 8501-2 at the time of coating. Care shall be taken to ensure that Power Tool Cleaning does not polish the steel surface. Hand tool cleaning is permitted prior to Power Tool Cleaning. If the surface being prepared lies adjacent to a coated surface the Power Tool Cleaning shall overlap the coated surface at least by 25 mm and the coated surface shall be feathered.

b) Centrifugal Abrasive Blasting: [Applicable for all local / field splice for structural & Piping Items]

A portable blasting machine using recyclable steel abrasive may be used to prepare steel decks and tank floors.

c) Vacuum Blasting

Vacuum Blasting may be used for spot repair of damaged or corroded area. It may be used in locations where open abrasive blasting is not permitted or desirable.

d) Wet abrasive blasting

Wet abrasive blast cleaning techniques may be used to avoid dust or in cases where fire and/or explosion risks are present. The cleaned surface should be washed off immediately after blast cleaning using fresh water. Corrosion inhibitors should not be used or only after written approval of the Principal. Corrosion inhibitor such as mass fraction 0.3 % sodium nitrite with mass fraction 1.2 % ammonium phosphate may be used to prevent flush rust, but Chromate inhibitors shall not be used. Corrosion inhibitor shall not be discarded into the sea. The paint Manufacturer shall approve the use of any inhibitor and the method for removing inhibitor residues before painting. The cleaned surface shall be dry at the time of painting. Particular care shall be taken to dry areas which are not self-draining, so that water collected is removed.

e) Water Jetting

High-pressure and ultrahigh-pressure water jetting may be used where abrasive blasting is not permitted because of the risk of damage to process equipment. Water jetting is restricted to maintenance painting. It is a hazardous operation and requires the use of well-trained, experienced operators. Where black spots occur in pits or other surface defects, the surface shall be cleaned again at higher pressure to remove the residual salts. Corrosion inhibitors should not be used or only after written approval of the Principal. Corrosion inhibitor such as mass fraction 0.3 % sodium nitrite with mass fraction 1.2 %ammonium phosphate may be used to prevent rust flash, but Chromate inhibitors shall not be used. Corrosion inhibitor shall not be discarded into the sea. The paint Manufacturer shall approve the use of any inhibitor and the method for removing inhibitor residues before painting.

The cleaned surface shall be thoroughly dry at the time of painting. Particular care shall be taken to dry areas which are not self-draining, so that water collected is removed.

7.0 COATING APPLICATION

7.1 General Application

All application, inspection and safety procedures shall be carried out in accordance with SSPC Painting Manuals, Vol. 1 Chapter 14.2 and Vol. 2 Chapter 5) and as set out below.

7.1.1 Supply and Storage

All coatings shall be furnished, mixed and applied in accordance with manufacturer's recommendations and as specified herein. Mixing of different manufacturer's coating applications on the same surface is not permitted.

All coating materials and thinners shall be in original, unopened containers being the manufacturers label batch numbers and instructions. For materials having a limited shelf life, the date of manufacture and the length of life shall be shown. Materials older than their stated shelf life shall not be used.

Materials shall be stored in accordance with the manufacturer's recommendations.

Coating materials that have gelled, other than thixotropic materials or materials that have deteriorated during storage shall not be used.

7.1.2 Pot Life

If the coating requires the addition of a catalyst, the manufacturer's recommended pot life for the application conditions shall not be exceeded. When the pot life is reached, the spray pot shall be emptied, cleaned and a new material catalyzed. Manufacturer's recommendations to be followed

7.1.3 Mixing

Mixing and thinning directions as furnished by the manufacturer shall be followed. Only thinners specified by the manufacturer shall be used.

All coating materials shall be stirred with a power mixer use, until the pigments, vehicles and catalysts are thoroughly mixed and then strained while being poured into the spray pot. During application the materials shall be agitated according to the manufacturer's recommendations.

Different brands or types of paints shall not be intermixed.

7.1.4 Unblasted Surfaces

Coating shall not be applied within 75 mm of an unblasted surface.

A 300 mm wide strip of uncoated, blasted surface shall be left between primed and unblasted surfaces, so as to prevent damage to the newly dried coating when additional blasting is done.

7.1.5 Application Requirements

A Coating procedure test (CPT) shall be used to qualify all coating procedures. A suitable location on the component to be coated may be selected on which the CPT shall be carried out. Alternatively, a test panel (minimum 1 m x 1 m) containing at least 1 pipe-end (1500mm long& 50 mm Ø., 1 angle and 1 flat bar (1500 mm in length)may be used for other coating systems. The coating procedures shall be qualified under realistic conditions likely to be present during coating. Selection of coating systems and application procedures shall be made with due consideration to conditions during fabrication, installation and service of the installation.

7.2 Cleanliness

All Surfaces shall be clean free from dust and dry. Any blast cleaning dust or grit remaining on the surfaces shall be removed by means of compressed air before priming or application of any coating. Any surface with a rust bloom shall be re-blasted as per ISO: 8504.

7.2.1 Temperature

Coating shall only be applied when the temperature of the steel is at least 3°C above the dew point, ambient air temperature must be within the limits specified by the manufacturer.

7.2.2 Weather Conditions

No coatings shall be applied during fog, mist or rain or when humidity is greater than 85% or on to wet surfaces. In case the minimum temperature at the fabrication yard is below 5^0C, the contractor shall propose alternate coating procedure for Company's approval at the bidding stage itself.

The company has the right to suspend application of coating when damage to the coating may result from actual or impeding weather condition.

When Relative Humidity (RH) is less than 60%, Zinc rich Epoxy Primer shall be used in instead of Inorganic Zinc Silicate as per recommendation of manufacturer and with prior approval of the company.

7.2.3 Coats

Each coat shall be applied uniformly and completely over the entire surface. Each coat shall be allowed to dry for the time specified by the manufacturer before the application or a succeeding coat. To reduce the possibility of intercoat contamination and to assure proper adhesion between successive coats, all coats shall be applied as soon as possible after the minimum specified drying time of the preceding coat.

7.3 Brush Application

7.3.1 General Requirements

A **stripe coat** shall always be applied by brush. The stripe coat shall be applied for each coat to all edges, corners, welding seams, bolt holes, back side of piping, stiffeners, vent and drain holes, notches and any other area that is difficult to reach by spray gun & where spraying may not be effective.

The colour of the stripe coat shall be different from the previous or subsequent coat.

Inorganic zinc primer coatings shall not be applied by brushing, not even for touch – up repairs.

7.3.2 Equipment for Brush Application

Brushes shall be of a style and quality that will permit proper application of coating. Round or oval brushes are most suitable for rivets, bolts, irregular surfaces and rough or pitted steel. Wide flat brushes are suitable for large flat areas. Brush width shall not be greater than 100 mm. No extension handles shall be used on brushes.

7.3.3 Procedure for Brush Application

Rounding of Edges and surface preparation shall be done as per Clause No. 6.3.1 of this Specification prior to brush application.

(a) Brushing shall be done so that a smooth coat, uniform in thickness, is obtained. There shall be no deep or detrimental brush marks.

(b) Paint shall be worked into all crevices and corners.

(c) All runs and sags shall be brushed out to prevent air pockets, solvent bubbles or voids.

(d) When applying solvent type, coatings, care shall be taken to prevent lifting of previous coats.

7.3.4 Finish Coat

An additional layer of finish coat shall be hand brushed at edges, corners, welds and hard-to spray areas to eliminate holidays in the final coats.

7.4 Spray Application

7.4.1 Equipment

(a) All equipment to be used for spray applications shall be inspected and tested before application begins.

(b) All equipment shall be maintained in good working order and shall be equal to that described in the manufacturer's instructions.

(c) All equipment shall be thoroughly cleaned before and after each use and before adding new material.

(d) An adequate moisture trap shall be installed between the air supply and each pressure pot. The trap shall be of the type that will continuously bleed off any water or oil from the air supply.

(e) Suitable pressure regulators and gauges shall be provided for both the air supply to the pressure pot and the air supply to the spray gun. Spray equipment and operating pressures shall comply with the recommendations of the manufacturer.

(f) The length of hose between the pressure pot and spray gun shall not exceed 15 m.

7.4.2 Procedures

(a) Pressure pot, material hose and spray gun shall be kept at the same elevation where possible. When spraying inorganic zinc, the elevation difference shall not exceed 3m.

(b) The spray gun shall be held at right angles to the surface.

(c) Each pass with the spray gun shall overlap the previous pass by 50%.

(d) The spray width shall not exceed 300 mm.

(e) All runs and sags shall be immediately brushed out or the surface re-coated.

(f) Large surfaces shall receive two passes (except when applying inorganic zinc) at right angles to each other (crosshatched).

(g) The coated surface shall be checked for chloride contamination before application of subsequent coating. When surface are encountered with chloride contamination soluble salt removers shall be used before application of coatings.

7.4.3 Airless Spray Equipment

(a) Airless spray equipment may be used for applying epoxy or aliphatic polyurethane coatings.

(b) The manufacturer's recommendations in selection and use of airless spray equipment shall be followed

7.4.4 Field Welds

No coating shall be applied within 150 mm of edges prepared neither for field welds nor to surfaces waiting non-destructive testing.

7.4.5 Tie/Sealer Coat

After application of Inorganic zinc Silicate primer, a tie/sealer coat of 25-35 µm DFT of polyamide epoxy on top of Primer coat shall be applied in order to seal porous surface of the zinc primer as per recommendation of the Manufacturer.

7.5 Roller Application

Roller application is permitted for paint materials where this is the manufacture's recommended method of application, such as for deck paints containing non-skid material. The manufacturer's recommended procedures shall be used.

7.6 Over spray and Drip Protection

Appropriate protection of buildings, structures and equipment from drips and spray and shall be provided to all equipment and facilities.

7.7 Safety Equipment

Appropriate safety equipment shall be provided for blasters, painters and other workers involved in the preparation and application of coating systems as per recommendation of paint manufacturer. Work areas shall be adequately ventilated.

7.8 Handling and shipping of coated items

Coated items shall be carefully handled to avoid damage to coated surfaces. No handling shall be performed before the coating system is cured to an acceptable level. Packing, handling and storage facilities shall be of non-metallic type.

8.0 REPAIR OF DAMAGED AREAS

All areas of paintwork that are locally damaged during transportation, handling or erection shall be repaired as specified below:

Prior to the application of any re-coat, damaged coatings shall be removed, preparing the surface and reapplying the protective coat(s).

Following steps of repair shall be followed for damaged painted / coated areas.

8.1 Repair Procedure for Damaged coating

Surfaces where coating is damaged after application of the finish coat shall be repaired as follows;

8.1.1 Top Coat

The top coat damaged, but base coat undamaged and the metal substrate is not exposed:

(a) Damaged coating shall be removed with a hand file and abraded back to the sound coating using emery paper or a fine grinder.

(b) The damaged area shall be wiped with a suitable solvent to remove debris. The periphery of repair area shall be feathered back for a minimum distance of 25 mm into the adjacent undamaged coating by light abrasion or grinding to produce a smooth chamfered surface profile.

(c) Apply a new topcoat as specified.

8.1.2 Base Coat

Coating damaged to base metal

(a) The damaged area greater than 0.2m^2 in area, the surface of exposed metal shall be prepared to the original specified standard prior to repairing by power tool cleaning as per SSPC-SP3 or spot blasting to SSPC-SP5 and applying primer, intermediate coat and final coat as specified. Alternatively, high solid surface tolerant epoxy coating may be used in place of primer & intermediate coats, followed by specified topcoat

(b) The damaged areas less than 0.2 m^2 in area may be repaired as per manufacturer's recommendation or by preparing the surface of exposed metal by power tool cleaning as per SSPC-SP11 to the original specified standard.

A primer, intermediate and final coat shall be applied as specified. Alternatively, high solid surface tolerant epoxy coating may be used in place of primer & intermediate coats, followed by specified topcoat. Brush application is acceptable. Even appearance and smooth feathering into surrounding coating in addition to correct dry film thickness and holidays must be achieved. Coating and surrounding repaired areas shall not be damaged and complete tie-in of the coating with surrounding areas shall be obtained. Zinc based products shall not be applied without Blast Cleaning to Sa 2 ½, instead Surface tolerant epoxy @ 100 microns shall be used as a primer in case blast cleaning is not possible or practical.

9.0 GALVANIZING

9.1 Galvanizing Standard

All steel grating, stair treads, handrails, ladders and other items specified as being galvanized shall be hot-dipped after fabrication in accordance with ASTM A123. Iron and steel hardware materials shall be hot-dip galvanized in accordance with ASTM A153.

9.2 Surface Preparation

All welding slag and burrs shall be removed. Surface contaminants and coatings, which cannot be removed by the normal chemical cleaning process in the galvanizing operation, shall be removed by abrasive blast cleaning.

Steelwork shall be prepared in accordance with the requirements of ASTM A123 and/or ASTM A153.

9.3 Zinc Coating Weight

The weight of zinc coating on structural items shall be **minimum 0.705 kg/m^2** surface area. The composition of the zinc used in the galvanizing bath shall not be less than 98% zinc.

9.4 Surface Finish

The galvanized coating shall be continuous, adherent, as smooth and as evenly distributed as possible and free from any defect that is detrimental to the end use of the coated component. On 'silicon killed' steels, the coating may be dully gray, provided the coating is sound and continuous.

9.5 Welding

Galvanized members, that are to be permanently fixed by welding, shall be attached after the supporting members are primed, but before topcoats are applied. The heat affected area of the supporting structure shall be cleaned of all welding flux, the surface prepared and the coating reinstated. Grinding of edges prior to welding shall be permitted to reduce zinc oxide fumes formed during welding and eliminate the potential for weld porosity to occur. Adequate ventilation shall be provided and in confined spaces a respirator shall be used.

9.6 Damaged Items

All damage to galvanized items caused by fabrication, welding, handling and loading out of installation shall be reinstated.

9.7 Reinstatement of Damaged Surfaces

Repaired surfaces shall present the same appearance as adjacent galvanized areas and have approximately the same weathering characteristics as the galvanized surface.

9.8 Painting Galvanized Surfaces

All galvanized structural members shall be painted with coating system **13.7**. All galvanized surfaces shall be degreased, fresh water washed and treated as per SSPC SP1. It will then be sweep blasted and coated with surface tolerant epoxy – F8 as primer ~~or compatible Epoxy~~ primer followed by respective coating systems.

9.9 Painting Aluminium Helideck

a) For Blast Cleaning

All areas to be thoroughly cleaned with strong detergents and high pressure water to remove all traces of oil or grease. Aluminum oxide to be used as blasting media, abrasive size to be 60-80 mesh, surface profile 25-50 micron. Nozzle pressure to be 4-5 bars. During blasting nozzle movement should be continuous to avoid positional high density as aluminum is a soft metal.

For spot repairs after painting no spot blasting is recommended, positional rectification by mechanical tool cleaning shall be done. Part by part blasting and priming is preferable than one time area blasting and priming as it is difficult to identify oxidation over aluminum surface.

b) For Power Tool Cleaning

All areas to be thoroughly cleaned with strong detergents and high pressure water to remove all traces of oil or grease. 3M abrasive flap of 35or 60 meshes for electrical or pneumatic rotor grinding machine to be used for roughening the surface. It is preferable to prime the surface within 4-5 hours after cleaning to avoid oxidation over cleaned surface. Part by part blasting and priming is preferable than one time area blasting and priming as it is difficult to identify oxidation over aluminum surface.

9.10 Painting stainless steel (wherever applicable):

Stainless steel Handrails and ladders in the splash zone as specified in bid shall be coated as under:

i. Surface preparation: Sweep blasting with non-metallic and chloride free grit to obtain anchor profile of approximately 25 µm to 50 µm.

ii. Top coat: Two component epoxy- minimum 350µm DFT.

Also as per recommendation of paint manufacturer.

10.0 INSPECTION AND TESTING PLAN (ITP)

10.1 Quality Control

Procedures for testing and documenting quality control shall be prepared prior to the initial start up of any work covered by this specification & submitted to company for approval. The procedures shall include methods to assure the specification requirements are complied. Further, environmental conditions, surface temperature, coating applicator, surface(s) being coated and coating applied and status of required examinations and tests shall be documented.

Testing and inspection shall be carried out in accordance with Table-10.2. Surfaces shall be accessible until final inspection is carried out.

ITP shall include breakup of various activities, estimated time, duration for each activity. Time duration for painting activity wise is to be included in the in the planning package of the fabrication yard and adhere to the painting schedule during fabrication of structure in the yard.

Following inspection activities shall be included in the Inspection and Test Plan (ITP) furnished in Table 10.2.

10.2 Inspection and Testing requirements

Requirement for Inspection & Test Plan for Equipment, Pressure Vessels and Package items shall be followed as specified in respective Discipline Design Criteria or Specification

Table 10.2.1 - Inspection and testing requirement

Test type	Test Method	Test Frequency	Acceptance criteria	Consequence
Environmental conditions	Ambient and steel Temperature. Relative Humidity. Dew point.	Before start of each shift + minimum twice per Shift.	In accordance with specified requirements	No blasting or coating
Visual examination	Visual for sharp edges weld spatter slivers, rust grade, etc.	100 % of all surfaces	No defects, see specified requirements	Defects to be repaired
Cleanliness	a) ISO 8501-1 b) ISO 8502-3	a) 100 % visual of all surfaces b) Spot checks	a) In accordance with specified Requirements b) Maximum quantity and size rating 2	a) Re-blasting b) Re-cleaning and retesting until acceptable
Salt test	ISO 8502-6 and ISO 8502-9	Spot checks	Maximum conductivity Corresponding to 20 mg/m^2	Repeated washing with potable water and retesting

			NaCl for External surface and 50mg/m² for internal surface of Vessel.	until acceptable
Roughness	Comparator or stylus instrument (see ISO 8503)	Each component or once per 200 m²	As specified	Re-blasting
Curing test (for Zn silicate).	ASTM D4752	Each component or once per 100 m²	Rating 4-5	Allow to cure
Visual examination of coating	Visual to determine curing, contamination, solvent retention, pinholes / popping, sagging and surface defects	100 % of surface after each coat	According to specified requirements	Repair of defects
Holiday detection	NACE RP0188 and as per note -1 below	As per coating system specification	No holidays	Repair and retesting.
Film thickness	ISO 19840. Calibration on a smooth surface	ISO 19840	ISO 19840, and coating system data sheet	Repair, additional coats or recoating as appropriate
Adhesion	ISO 4624 using equipment with an automatic centred pulling force, and carried out when coating system are fully cured	Each component or once per 200 m²	*See note-2 below	Coating to be rejected
Paint Material Inspection	Company appointed Inspector / representative shall physically verify paint material with respect to Test Certificate, data sheet, Batch Number, Date of Manufacture, date of expire and accept the Paint material.			
Surface preparation & Priming Coat application	Company appointed Inspector/ representative shall physically verify & record the surface preparation anchor pattern, record of surface salt acceptability and clear for priming coat application. Record of Temperature, Humidity and Dew point Temperature shall be recorded at the time of Start, at time interval Duration of Priming coating application and at completion time.			
Application intermediate coating	Company appointed Inspector/ representative shall carryout physical verification of coating application at random.			
Final coating application	Company appointed Inspector/ representative shall carryout physical verification of coating application at random.			
Final coating acceptance	Company appointed Inspector/ representative shall physically verify & record coating thickness, other field test and accept the coating.			

*Note:

1. Holiday Testing (Detection of pinholes)

   Holiday testing shall be conducted in accordance with NACE SP0188. For immersion and splash zone services, 100% of the coated areas shall be inspected for holidays. For atmospheric services, 10% of the coated areas, which include weld seams, corners, and edges, shall be holiday detected. Any holiday is unacceptable and shall be marked and repaired according to spot repair procedures. Lined vessel shall be marked clearly in black letters on vessel surface: “LINED VESSEL - HOT WORK PROHIBITED”.

   Pinhole testing for electrically non-conductive coatings shall be carried out in accordance with NACE RP0188 for splash zone coatings, internal tank coatings and the external coatings of buried tanks, vessels and piping.The high voltage technique shall be used; nominally set at 5 V/µm based on NDFT, or as agreed with the paint Manufacturer but not exceeding 25 kV in total. For coatings that are < 500 µm DFT, the wet sponge technique may be used if approved by the company.

2. Adhesion test

   Adhesion test shall be carried out on separate test plates, adhesion values in accordance with ISO 4624 shall be minimum 5.0MPa when using automatically centered test equipment.

10.3 Role of Paint Vendor Representative

The Contractor shall have to ensure that the Authorized technical-representative of the paint Manufacturer shall be qualified in accordance with NS 476 Inspector level II or certified as NACE coating inspector level II and physically inspects the painting / coating applications including surface preparation.

The Authorized technical representative of the paint Manufacturer shall have relevant knowledge of health and safety hazard, use of protection equipment, coating materials, mixing and thinning of coatings, coating pot-life, surface requirements, etc.

Paint manufacturers inspector /supervisor present in the fabrication yard shall be qualified according to NS 476 Inspector level-I, or certified as NACE coating inspector level-I and may carry out the inspection work under the guidance of an inspector level-II.

10.4 Qualification of Contractor’s QC personnel at Fabrication Yard (Inspectors, supervisors, foremen)

The contractor’s quality control inspector shall be qualified as a coating inspector in accordance with NS 476 Inspector level II or NACE level-II.

The contractor’s quality control inspector shall qualify the tradesman level as blast-cleaner, painter, and applicator etc. for painting application.

The personnel shall have relevant knowledge of health and safety hazard, use of protection equipment, coating materials, mixing and thinning of coatings, coating pot-life, surface requirements etc.

Contractor shall carry out tests in accordance with the painting Specification, relevant Codes & standards for all coating systems applied as per clause 13.0 that are planned to be used for this project before commencement of painting work.

Contractor shall generate Painting application document & inspection report item wise specifying date & time of application for each step of painting with test record.

The test shall be carried out on a test panel in compliance to ISO 4624.

The acceptance criteria are the requirement to the visual and non – destructive inspection of the coating system described in this specification # section 10.2. Operators failing to meet the requirement shall not be allowed to carry out the work on this project.

10.5 Qualification of passive fire protection operators

Operators including pump machine operator, shall be qualified, trained and certified according to the manufacturer's procedures. Before any stud welding, the welders and the procedures to be used shall be qualified in accordance with the coating manufacturer's procedures.

If the operators or stud welders have not been working with the type of application or material within a period of 12 months, the applicator shall document that necessary supplementary training have been given before start of any work.

10.6 Equipment and Material

Materials, tools or equipment used in the surface preparation and coating applications, shall be inspected regularly and rejected if they do not comply with the Specification.

10.7 Inspection of Instruments

The following items shall be inspected using the inspection instruments listed below:

Instrument Item	Inspection Instrument
Surface Profile	Keane-tator Surface Profile Comparator or Testex Press-o-Film Elcometer 124 with 122 testex tape
Holidays	Tinker – Rasor Model M – 1
Surface Cleanliness	SSPC – Vis – 1
Viscosity	Zahn Viscometer or Ford Cup
Wet Film Thickness(WFT)	Nordson Wet Film Thickness Gauge

	Sheen WFT Gauge
Temperature & Humidity	Gardner Certified Hydrometer and Temperature Indicator
Surface Temperature	Pandux Surface Temperature Thermometer Elcometer Surface temperature gauge
Compressed Air Quality	Dry white cloth

10.7.1 **Calibration of Equipment**

Each test instrument shall be maintained and calibrated as prescribed by the manufacturer.

10.7.2 **Dry Film Thickness**

The dry film thickness of the coating system shall be determined in accordance with SSPC-PA2 or by a Microtest thickness gauge (ISO 2178) or comparable instrument in accordance with the following procedure.

(a) Ten readings shall be taken for every 10m^2 of painted areas.

(b) 90% of all readings shall be within the specified dry film thickness.

(c) Where thickness accordance with the above procedure fall below the specified minimum an additional coat of the intermediate or finish coat shall be applied.

10.8 **Repair**

All work not done in accordance with this specification shall be redone or repaired as per coating system 13.10.

10.9 **Maintenance**

For maintenance of previously coated surfaces, the condition of the existing coating and the surfaces shall be checked using suitable methods, e.g. ISO 4628, to determine whether partial or complete repainting should be carried out. The type of surface preparation and protective paint system shall then be specified. The paint manufacturer should be consulted for recommendations. Test areas may be prepared to check the manufacturer's recommendations. Coating system 13.11 shall be followed for maintenance work.

10.10 **Role of Company Representative / Company appointed TPI /CA**

Refer Table 10.2

10.11 **Surface preparation, Coating application & field Test Report**

- Contractor shall generate Painting application & inspection report item wise (to be painted) for each activity of painting (surface preparation, priming, tie coat, 1st coat & final coat as applicable) specifying date & time of application. A daily record shall be maintained with following as minimum:

  (a) Air Temperature at the start, finish of the work and at intermediate stage.

  (b) Relative Humidity & dew point during application period (at interval of time).

  (c) surface roughness/ anchor profile,

  (d) Coating Material details & batch number (for traceability),

  (e) Salt test, chloride contamination

  (f) Dry film thickness applied & Identification of areas coated

  (g) Results of required field tests carried out.

  (h) Paint progress/ time lapse between coats.

These reports generated shall be documented in Construction Dossier in original and submitted to Company with PDF Copy.

11.0 PAINT MATERIALS:

The coating manufacturer shall provide a Coating System Data Sheet (CSDS) for each coating system to be used, containing at least the following information for each of the primer, intermediate coat (s) and topcoat product:

- Product name
- Colour
- Material type
- Batch numbers, Part A & B
- Manufacturing Date
- Shelf life
- Volatile organic compounds (VOCs) (g/l)

- Cleaning Solvent
- Thinner Type
- Maximum percentage of thinner content by volume
- Mixing ratio by volume or weight
- Application method
- Application temperature range (ºC)
- Application RH range (%)
- Induction time (minutes)
- Minimum recoat and dry to touch time (hours@ temperature)
- Maximum recoat time (days @temperature)
- Solids content by weight and/or volume
- WFT Range (µm)
- DFT Range (µm)
- Pot life (hours@ temperature)

Paint manufacturer shall furnish all the characteristics of paint materials on printed literature, along with the **test Certificate with actual test values of supplied batch for all the specified characteristics given in the specifications**.

Paint Material inward & traceability (location used) shall be maintained. These records shall be documented in Construction Dossier and submitted to Company.

All the paint materials shall be of first quality and conform to the following general characteristics are furnished below:

Table -11.1: Required **Characteristic of Paint Materials**

Description	Technical name	Type and composition	Volume of solids (approx.)	DFT (Dry film thickness) per coat (approx.)	**Theoretical covering capacity in M /coat/litre (approx.)**	Weight per litre in kgs/ litre (approx)	Touch dry at 25° C (approx.)	Hard dry at 25° C (approx.)	Over coating Interval (approx.)	Pot life (approx.) 25° C	Resistance to dry temperature
1	2	3	4	5	6	7	8	9	10	11	12
F-1	Epoxy MIO High build finish paint	Two pack polyamide cured epoxy, pigmented with lamellar micaceous iron oxide	80 ± 5%	100-125u	As per suppliers data	1.4	3 hours	Overnight	Min. : Overnight Max. : as recommended by manufacturer	2 hrs.	90°-120° C
F-2	Self -priming surface tolerant High build Epoxy coating	Two pack epoxy resin based suitably pigmented	80 ± 5%	100-125u	As per suppliers data	1.4	3 hours	24 hours	Min, :10 hours Max: as recommended by manufacturer	90 mints	90°-120° C
F-3	Inorganic zinc-silicate coating SSPC SP-20, Level-II, containing 80±3% zinc in dry film by weight & zinc as per ASTM D520 Type-II	A two pack air drying self - curing solvent based Inorganic Zinc silicate coating.	65 ± 5%	65-75u	8-9	2.3	30 mts	less than 6 hours	Min. 16-24 hours Max. as recommended by manufacturer	2 to 4 hours	400° C
F-4	Organic zinc rich epoxy coating SSPC SP-20, Level-II, containing 80±3% zinc in dry film by weight & Zinc as per ASTM D520 Type-II	Two pack epoxy resin based zinc primer	65 ± 5%	65-75u	As recommended by manufacturer	2.5	75 mts	less than 6 hours	Min. ; 6 hours Max. ; as recommended by manufacturer	5 hours	90-120° C

F-5	Heat resistant Aluminum paint based on Moisture Curing Silicone Binder	Single pack moisture cured silicon resin based medium with aluminum flakes	40±5 %	20-25u	As recommended by manufacturer	1.1	30 mts	1-2 hours	Min. ; 6-12 hours Max. ; as recommended by manufacturer	Not applicable	Upto 600° C
F-6	Epoxy Phenolic based Tank Lining (see note-1)	Two Pack Epoxy Phenolic Based	60±5 %	125 u-150µ	As per suppliers data	Min 1.4	5 hours	8 hours	Min. ; 8 hours Max. ; as recommended by manufacturer	As recommended by manufacturer	Upto 200° C
*F-7	Epoxy Passive fire protection (PFP)		100%	As per risk analysis Study report & as recommended by manufacturer							
F-8	Extra High Build Epoxy	Two pack polyamide/Polyamine cured epoxy resin	100±5%	2500 µm	As per suppliers data	Min 1.9	8 hours	Overnight	**Min. 4 hrs Max. As recommended By manufacturer**	30 minutes	140° C
F-9	Glossy Aliphatic Acrylic Polyurethane Topcoat	Two Components Aliphatic Acrylic Polyurethane	60±5 %	65-80 µm	As per suppliers data	--	1.5 hours	6 hours	Min. 6 hours Max. ; As per suppliers data	1 hour	90° -120° C

F-10	Solvent free epoxy for Drinking / potable water tanks (see note-2)	A Two pack solvent free epoxy tank coating for drinking water	100%	250-300µm	As per suppliers data	--	6 hrs	12 hrs	Min. ; 10 hours Max. ; 40 hours	1 hour	Upto 60°C
F-11	Ultra High Build glass flake Epoxy	A Two component glass flake Epoxy coating	96%± 2%	600-1000 µm	As per suppliers data	--	Refer Product Data Sheet	Refer Product Data Sheet	Refer Product Data Sheet	Refer Product Data Sheet	90-100 °C
F-12	Pure epoxy pigmented with aluminium (see note-3)	A Two component Pure epoxy coating pigmented with aluminium	60%± 2%	100-200 µm	As per suppliers data	---	3 hours	6 hours	7 hours -14 days	2.5 hours	---
F-13	Low volume solid epoxy primer As recommended by paint manufacturer	A Two pack epoxy solvent free epoxy tank coating for drinking water	47%± 2%	40 µm	As per suppliers data	---	30 minutes	8 hours	As recommended by supplier	8 hours	--
F-14	Sealer coat TSAC As recommended by pain manufacturer	Used as Sealer for TSAC Operating temperature >120˚C	30%	15-25 µm	--	---	20 minutes	2 hours	As recommended by supplier	--	--
F-15	One coat of fast curing solvent less UV -resistant polyester resin (Isophthalic based reinforced with glass flakes.	Glass flake reinforced unsaturated Polyester coating	96%± 2%	600-1500 µm	As per suppliers data	--	2 hours	2 hours	As recommended by supplier	45 minutes	90-100 °C

Note:

1. IMO PSPC COT Resolutions MSC. 288 (87)

2. APAS Approved to specification 0213, 2974F & 2974P / UL Certified in accordance to NSF/ANSI 61. [In case of water tank constructed using stainless steel SS316L, tank internal coating is not required.]

3. Approved for PSPC for water ballast tank according to IMO Res. MSC 215 (82)

12.0 APPROVED VENDOR'S RECOMMENDED LIST OF PAINT MATERIALS

Table-12.1: **Approved Vendor's** Paint products

Description	Area of application	Berger Paints Ltd., India	Shalimar Paints, India	Carboline, USA (CDC) Carboline, India	**Sigma Coatings (PPG Coaings), USA**	Hempel, Denmark	Amercoat (PPG Coatings), USA	Jotun Coatings, Norway / Jotun India Pvt Ltd	KCC Corporation, Korea	International Brand (AKZO NOBEL), UK	Chogoku paints, Singapore	Excel India Paints, India
1	2	3	4	5	6	7	8	9	10	11	12	13
F-1 Epoxy MIO High Build finish	Exterior surface of steel <120° C	Epilux 455 HB MIO	epiguard XL	Carboguard 893 MIO	sigma cover 410 (MIO)	Hempadur Mastic 45880/1/W / 47550	Amercote 383 HS / 410 (MIO)	Penguard Midcoat MIO	Korepox EH2350	Interseal 547/ Intergard 475 HS	Univan MIO	EXLGUARD 495
F-2 Self-priming surface tolerant High build Epoxy	Maintainance Painting	Barger Protectomastic RPL	epiplus 56	Carbomastic 615	SIgma Cover 630 /620	Hempadur Mastic 45880/1/W / 47550	amerlock 400 / 400C	Jotamastic 80/Jotaprime mastic 80	Korepox Primer EP 1760	Interseal 547/ Interseal 670 HS	Umeguard HS	EXLGUARD 680
F-3 Inorganic zinc silicate coating SSPC SP-20, Level-II, containing minimum 80% zinc in dry film by weight & zinc as per ASTM D520 Type-II	Primer coat Relative Humidity> 60%	Zinc anode 304 Coating	tuffcote zilicate -IZS	cabozinc 11	Sigma Zinc 158	Hempel's Galvosil 15780	dimetcote 9	Resist 78/Resist 804A	Galvany IZ 180 (N)	Interzinc 2280	Galbon S-HB	EXLZINC 113

ओएनजीसी ONGC	**OFFSHORE DESIGN SECTION**	SPECIFICATION FOR PROTECTIVE COATING	SPEC. No. 2005 Rev. No. 9 Discipline Structural No of Pages: 43 of 78

Description	Area of application	Berger Paints Ltd., India	Shalimar Paints, India	Carboline, USA (CDC) Carboline, India	**Sigma Coatings (PPG Coaings), USA**	Hempel, Denmark	Amercoat (PPG Coatings), USA	Jotun Coatings, Norway / Jotun India Pvt Ltd	KCC Corporation, Korea	International Brand (AKZONOBEL), UK	Chogoku paints, Singapore	Excel India Paints, India
1	2	3	4	5	6	7	8	9	10	11	12	13
F-4 Organic zinc rich epoxy coating SSPC SP-20, Level-II,containing minimum 80% zinc in dry film by weight & Zinc as per ASTM D520 Type-II	Primer coat When Relative Humidity< 60% & Primer for repair work	Epilux ZR HB Primer	Epigard 4	Carbozinc 858	Sigma zinc 109 HS	Avantguard 1736 G	Amercoat 68 HS	Barrier 80	Korepox Zinc Rich Primer EZ 175	Interzinc 52	-	EXLZINC 108
F-5 Heat resistant Aluminum paint based on Silicone Binder	Temperature >400° C For equipments	Lumerous HR143	lustotherm 600	Thermaline 4700 aluminium	Sigmatherm540	Hempel's Silicon aluminium 56914	Amercoat 878 HS	Solvalitt	Yeolcoat QT 606	Intertherm 50	-	EXLTHERM HR600
F-6 Epoxy Phenolic based Tank Lining	Internal lining of Diesel & crude oil tank	Epilux 9 HB Phenolic Coating	HB finish	Phenoline 187 VOC	sigma guard 730	hempadur 85671	Amercoat 90 HS	Tankguard storage	Kophenol EH2630	Interline 850	-	EXLLINI 965
*F-7 Epoxy (PFP) (See note-2 below)	Protection of platform from pool and jet fire	-	-	Pyroclad X1	PITT-CHAR XP	Hempafire Pool 200	PITT-CHAR XP	Jotachar JF 750/Jotachar 1709	Firemask 3200	Chartek-7/ Chartek-7E/ Chartek-1709	-	EXLINTUMESCENT 447

ओएनजीसी ONGC	**OFFSHORE DESIGN SECTION**	SPECIFICATION FOR PROTECTIVE COATING	SPEC. No. 2005 Rev. No. 9 Discipline Structural No of Pages: 44 of 78

Description	Area of application	Berger Paints Ltd., India	Shalimar Paints, India	Carboline, USA (CDC) Carboline, India	**Sigma Coatings (PPG Coaings), USA**	Hempel, Denmark	Amercoat (PPG Coatings), USA	Jotun Coatings, Norway / Jotun India Pvt Ltd	KCC Corporation, Korea	International Brand (AKZO NOBEL), UK	Chogoku paints, Singapore	Excel India Paints, India
1	2	3	4	5	6	7	8	9	10	11	12	13
F-8 Extra High Build Epoxy	Steel plated helidec k,walk way,es cape route & laydow n area	-	-	Carboguard 1207	Sigmashield 1090	Hempel's Spray Guard 35490/3	Tideguard 171	Jotacote UHB	Korepox H.S.EH3200	Interzone 485	-	EXLGUARD-991UHB
F-9 Glossy Aliphatic Acrylic Polyurethane Topcoat	Finish coat for UV protection & required colour	Bergerthane Acrylic PU Coating	Shalithane HB rich	Carbothane 134HG	Sigmadur 550 / 585	Hempathane topcoat 55910/55610/55210	Amercoat 450 Series	Hardtop XP/Futura OS	Korethan Topcoat UT6581	Interthane 990/ Interthane 990 SG	-	EXLTHANE 570
F-10 Solvent free Epoxy	Internal lining of potable water tank	Epilux 155 SF	-	Carboguard 703	Sigma Guard CSF 650 / 585	Hempadur 35530/35531	Amercoat 391 PC	Tankguard 412	Korepox H.B.EH3100	Interline 925	-	EXLLINE-989SF
F-11 Ultra High Build glass flake Epoxy (Splash Zone)	Protection of structure in splash zone	Steel shield 1100	Tuffkote Epishield ST glass flake epoxy	Carboguard 1209	Sigmashield 905 / 880GF	Hempadur Multistrength 35870	Amerlock 400GF	Marathon XHB	Korepox H.B.EH3200 (GF)	Interzone 1016	Permax no.3000 S	EXLGUARD- 890GF

ओएनजीसी ONGC	**OFFSHORE DESIGN SECTION**	SPECIFICATION FOR PROTECTIVE COATING	SPEC. No. 2005 Rev. No. 9 Discipline Structural No of Pages: 45 of 78

Description	Area of application	Berger Paints Ltd., India	Shalimar Paints, India	Carboline, USA (CDC) Carboline, India	**Sigma Coatings (PPG Coaings), USA**	Hempel, Denmark	Amercoat (PPG Coatings), USA	Jotun Coatings, Norway / Jotun India Pvt Ltd	KCC Corporation, Korea	International Brand (AKZONOBEL), UK	Chogoku paints, Singapore	Excel India Paints, India
1	2	3	4	5	6	7	8	9	10	11	12	13
F-12 Pure epoxy pigmented with aluminium	Internal lining of ballast water/ salt water tank	-	-	Carbomastic 615A	Sigmacover 280	Hempadur uniq 47741/ 4774 D	Amercoat182ZP	Jotacote universal alu./ Jotacote universal N10	Korepox EH2030	Intershield 300	-	EXLGUARD- 343
F-13 Low volume solid epoxy primer As recommended by paint manufacturer	Used as Sealer/ Tie coat for TSAC & Over Zinc silicate primer Operating temperature <120˚C	-	-	Carboguard 893ZP	Sigmacover 522/246	Hempadur 05990/15553/15570	Amercoat 182 ZP/71 TC	Penguard tie coat 100 /Penguard primer	Korepox Holding Primer EP 1700	Intergard 269	-	EXLGUARD- 247
F-14 Aluminum silicone sealer/tie coat As recommended by paint manufacturer	Used as Sealer for TSAC Operating temperature >120˚C	-	-	Thermaline 1248 E	Sigmatherm 540	Hempel's Silicon aluminium 56914	Amercoat 878	-	-	Intertherm 50/ Intertherm 972	-	EXLTHERM-530

Description	Area of application	Berger Paints Ltd., India	Shalimar Paints, India	Carboline, USA (CDC) Carboline, India	**Sigma Coatings (PPG Coaings), USA**	Hempel, Denmark	Amercoat (PPG Coatings), USA	Jotun Coatings, Norway / Jotun India Pvt Ltd	KCC Corporation, Korea	International Brand (AKZO NOBEL), UK	Chogoku paints, Singapore	Excel India Paints, India
1	2	3	4	5	6	7	8	9	10	11	12	13
F-15 Glass flake Polyester resin	Splash zone to bottom of Cellar deck (Maintenance Painting)	----	----	----	-	Hempel's Polyster GF -35920	Amercoat -4800	Baltoflake	----	Interzone-762	----	EXLGUARD 891GF

Note:

1. The paint materials indicated in the table are indicative only and may be updated. Bidder is to select & procure latest paint material from the list of the recommended list of paint manufacturers meeting the DFT requirement of paint.

2. *Epoxy (PFP) installed on the platform shall be Tough, durable and resistant to impact and vibration damage. Thickness of coating shall be based on risk analysis study report and fire safety measures to be taken to mitigate hydrocarbon and jet fire as per ISO 22899 jet fire certification up to 2 hours and NORSOK M-501. FIRE RATING shall implement based on safety study carried out in compliance to API 14J & API RP 2A.

3. Contractor to verify the latest status of availability & applicability of products before consideration and report their intention of change within the above listed vendors with proper reasons.

13.0 PROTECTIVE COATING SYSTEMS

13.1 SCOPE

Manufacturer's recommendations and latest product of paint shall be used to suit the environment conditions and for the intended purpose shall be followed. Care must be taken to achieve the specified dry film thickness indicated in the bid. **Items to be painted covered by these specifications are as follows:**

13.2 **Section A:** New Construction of offshore structure.

13.2.1 **Coating System No.1**: Atmospheric Zone-I: Thermally sprayed aluminium coating shall be applied for items having service life of 10 years or longer which are :

13.2.1.1 exposed to seawater & not easily accessible for inspection or maintenance:-

i) structural Steel items, piping, piping supports etc**. above splash zone** upto & including **Bottom plating of cellar deck**,

ii) Conductors, Pump & Sump Caisson.

iii) bottom framing beams & plating of Main Deck

iv) bottom chord of Bridge including bottom of plating , piping .piping supports etc

v) Boom of pedestal crane

vi) Steel framing supporting helideck above main deck and upto and including bottom of steel helideck.

TSAC is not required for bottom of aluminium pancake.

13.2.1.2 Exposed to operating temperature > 120 °C as heat resistance paint.

i) Flare Stack/vent boom

13.2.1.3 :Table for TSAC System

Application	Surface Preparation	Coating System	DFT
Coating System No.1A All carbon steel surfaces exposed to operating temperature > 120 °C. • Flare Stack/vent boom.	Cleanliness: SSPC –SP5/ Sa 3 Surface Profile: Minimum 75 µm	Thermally sprayed Aluminium or alloys of aluminium with sealer coat as top coat. *Sealer: (F-14)	225 µm (Min value 200 µm & Max value 250 µm) For sealer, see Note- 1
Coating System No.1B All carbon steel surfaces exposed to atmosphere & operating temperature < 120 °C. • Jacket above splash zone up to and including Cellar Deck bottom surface including bottom of deck plating, primary & secondary beams etc. • Main deck bottom surface including bottom of deck plating, primary & secondary beams etc.	Cleanliness: SSPC-SP5/ Sa 3 Surface Profile: Minimum 75 µm	Thermally sprayed aluminium or alloys of aluminium with sealer, intermediate coat and final coat as top coat *Sealer: (F-13) *Intermediate Coat (F-1) *Final Coat(F-9)	225 µm (Min value 200 µm & Max value 250 µm) See Note- 1 : Sealer Coat Note- 2: Intermediate Coat Note- 3: Final coat

• Bottom chord of bridge connecting offshore platforms including bottom of deck plating • Steel framing supporting helideck above main deck and upto bottom of helideck below aluminium pancake & bottom of steel helideck plating • boom of pedestal crane				

*Note-1: All metallized surfaces shall be sealed in accordance with the following requirements: The sealer shall fill the metal pores. It shall be applied until absorption is complete. There should not be a measurable overlay of sealer on the metallic coating after application.

The materials for sealing the metal coating shall be:

- Two-component epoxy for operating temperatures below 120 °C (F-13).
- Aluminium silicone above 120 °C (F-14).

Volume solids in the sealers when applied shall be 15 % nominal. The overlay of sealer should be less than 38 µm (1.5 mil) on the TSA coating after application.

The sealer should have a contrasting color to the TSA to aid visual inspection.

*Note-2: Intermediate coat over TSAC shall be applied as per coating system no.2

*Note -3: Final coat TSAC shall be applied as per coating system no.2

Application of Thermally Spread Aluminium Coating (TSAC) is specified in Clause No. 14.0.

- Repair, field coating of pipes and coating of in-fill steel

All requirements, including adhesion, applicable to metal spraying, shall apply.

The treating and handling of the substrate shall be done in such a manner that the product in its final condition will have a continuous and uniform coating. Before the metal spraying operation starts, the area 30 cm to 40 cm in distance from the weld zone shall be sweep-blasted to ensure that all contamination is removed. The uncoated welding zone shall be blast Cleaned as specified for coating system no. 1.

13.2.2 <u>Coating System No.2</u>: Atmospheric zone - II except for zone specified under coating system no. 1

Application Area	Surface Preparation	Coating System	Coating DFT Range

Carbon steel with operating temperature < 120 °C – Structural steel, Exteriors of equipment, vessels, piping and valves (not insulated) in Atmospheric Zone **except for zone specified under coating system no. 1**	Cleanliness: Near white metal shot/grit blasting as Per SSPC-SP-10 or Sa 2 ½ of SIS-05-5900 /ISO 8501-1 surface profile : 40-60 µm Max.	Primer Coat: Inorganic zinc silicate primer (F-3)	65 - 75 µm
		Sealer Coat/tie coat: Low volume solid epoxy (F-13) as recommended by paint manufacturer	25 - 30 µm
		Intermediate coats: Two coat of high build epoxy (F-1) with MIO pigments	100 – 125 µm (each coat)
		Finish Coat: One Topcoat of Gloss Aliphatic Acrylic Polyurethane (F- 9)	65 - 80 µm
		Total DFT µm	355-435 µm

Notes:

1. This system is applicable for carbon steel surface with operating temperature less than 120° C.
2. Colour for final coat shall be as per colour code.

13.2.3 Coating System No.3: Protection of Carbon Steel in Submerged & Splash Zone

Application	Surface Preparation	Coating System	Coating DFT Range
Coating System No.3A: Submerged Zone • PLEM, SSIV and Riser clamps, etc.	Cleanliness: Near white metal shot/grit blasting as Per SSPC-SP-10 or Sa 2 ½ of SIS-05-5900/ISO 8501-1 Surface profile: 40-60 µm Max.	two coat epoxy based primer with aluminium pigment (F-12)	100-125µm (each coat) Total 200 µm min.
Coating System No.3B: Splash zone: Jacket, Boat landing, Barge Bumper, conductors, Riser & Conductor Protector, clamps, etc.	Cleanliness: Near white metal shot/grit blasting as Per SSPC-SP-10 or Sa 2 ½ of SIS-05-5900/ISO 8501-1 Surface profile: 75-100 µm Max.	Two coats of Ultra High Build Glass Flake Epoxy Coating (F- 11)	750 µm (each coat) Total 1500 µm min.

13.2.4 Coating System No.4: Galvanizing

All grating, handrails, ladders, safety cages shall be hot dip galvanized as per ASTM 123 & misc. hardware shall be hot dip galvanized ASTM A153. Galvanizing shall preferably be done after cutting shaping and welding has been done. The weight of zinc coating for grating, handrails, ladders, safety cages shall be minimum **705 g**m per square meter **(coating thickness of 100** µm).
The weight/thickness of zinc coating for iron and steel hardware shall be as per ASTM A153.

The galvanized surface shall be free from bare spots, dross pimples, Lumpiness and runs, flux inclusions and slag inclusions.

13.2.5 <u>Coating System No.5</u>: Painting of All Galvanized items (as per 13.2.4) except gratings & Aluminium Helideck shall coated as below:

Application	Surface Preparation	Coating System	DFT in µm
All Galvanised items and Aluminium Helideck painting for marking, lettering, etc.	SSPC SP1 & etched chemically with etch primer or physically by sweep blast cleaning with non-metallic and chloride free grit to SSPC SP7/Sa1. Cleaning with alkaline solution followed by hosing with fresh water as per SSPC SP1. surface profile : 25-50 µm	Low volume solid epoxy primer suitable for aluminium & galvanized surface. (F-13)	Minimum 50 µm
		Intermediate coat: Two coat of high build epoxy with MIO pigments. (F- 1)	100 µm (each coat)
		Finish Coat: One coat of aliphatic polyurethane. (F-9)	Minimum 75 µm
			Minimum DFT 325 µm

13.3 <u>SECTION B</u>: New Construction: **Process vessels and piping, valves, manifolds, pumps, heat exchangers and related equipment**

13.3.1 All submersible type pumps protective coating system shall be as per manufacturer's standard which shall be suitable for Marine environment. Holiday test shall be carried out on protective coatings of all equipment as per NACE SP 0188.

13.3.2 Piping & other equipment

For Piping & other equipment made up of Carbon Steel Material, Protective coating system shall be followed as per Clause No. 13.2.2.

13.3.3 Flanges

Flanges on equipment to be installed on offshore platforms shall be coated with the protective coating system given in 13.2.2 except for the seal surface. Care shall be taken to prevent damage of ring and gasket seal surface by covering during the blasting and coating. After the coating has cured, an anti-rust grease coating shall be applied to protect the seal surface. Apply a minimum dry film of an anti-rust grease coating as per MIL-C-161730 Amendment, 2, Grade 1 Qualified Products List.

A corrosion control material (such as inhibitor grease) should be installed correctly initially after the flange has been assembled on the offshore structure. The bolt holes and flange crevices shall be sealed off completely from the offshore corrosive environment.

Commercially available viscous sealants, such as soft and low-molecular-weight polyolefin sealants or corrosion inhibitor greases, should be injected into the flange crevice. The sealants are very hydrophobic. A polymeric tape or SS tape should then be wrapped around the flange to enclose the flange crevice completely.

Petrolatum or wax tapes may be used for ambient to moderate temperature service applications in accordance with the product manufacturer's specification.

For maintenance, the entire flange should be overwrapped with a commercial petrolatum or wax tape, which is made of polyester felt impregnated with very hydrophobic petrolatum or wax to provide encapsulation against water. Visual inspection cannot be conducted without unwrapping the tape. However, the flange shall be wrapped again after the inspection. Tape shall be replaced if the encapsulation is broken.

All Painted Nut bolts used for flanged/bolted connection shall be protected from corrosion by providing Protective caps with inhibited grease as per recommendation of the vendor.

13.4 **SECTION C: COMPRESSORS, GAS TURBINES, GENERATORS, ENGINES, MOTORS, INSTRUMENTS AND PANEL BOARDS**

Equipment in covered/enclosed areas shall be coated as per Equipment manufacturer's standards coating suitable for **offshore environment** as specified in respective Specification wherever provided in Bid, otherwise Protective System given in 13.2.2 shall be followed.

All skid surfaces which can be cleaned by blasting shall be coated with one of the protective system given in 13.2.2. Protect critical moving parts, bearing surfaces, machined surfaces, nameplates, glass next to machinery, etc. from entrance of blasting dust and damage from blasting by masking with polyethylene sheeting and masking tape. Equipment in enclosed areas shall be protected with the same paint systems as for exterior surface. Panel boards shall be disassembled before cleaning and coating.

13.4.1 When equipment manufacturer's coating is unsatisfactory and blast cleaning is not permissible. Clean and protect as follows:

a. Remove coating by use of a paint and varnish remover.

b. Surface preparation; solvent cleaning (SSPC-SPI) followed by power tool cleaning (SSPC-SP3 or St3) or of SIS-05-5900.

c. One coat of (F-2) Self priming surface tolerant epoxy coating @ 125 Microns DFT/Coat minimum (maximum DFT-150 microns)

d. Top Coat – 2 coats (F-1) High build epoxy MIO coating cured with Polyamide/polyamine hardener @ 125 microns DFT/Coat minimum (maximum DFT – 150 microns/coat) = 2 X 125 =250 microns.

e. Finish Coat- One Topcoat of (F- 9) Gloss Aliphatic Acrylic Polyurethane 60-80 micron dry film thickness

Total DFT: Minimum: 435 microns, Maximum: 530 microns.

13.4.2 When equipment manufacturer's shop primer is sound and blast cleaning is not permissible, clean and top coat as follows (where finish coat has to be done at the yard):

a. Surface preparation: Solvent cleaning (SSPC-SPI), followed by power tool cleaning (SSPC-SP) or St 3 of SIS-05-5900.

b. Apply one coat of (F-2) Self priming surface tolerant epoxy coating @ 125 Microns DFT/Coat minimum (maximum DFT-150 microns)

c. Top coat: as per 13.4.1 (d) above.

13.4.3 Painting System applicable for Equipment having surface temperature between 110°C (230°F) and 400° C (752°F), clean and protect as follows.

a. Surface Preparation: Near white metal shot/grit blasting as per SSPC-SP-10 or Sa 2 ½ of SIS-05-5900/ISO 8501 –1:2001 with a 40 – 60 microns anchor pattern. Items with metal to metal joints shall be seal welded prior to blasting and coating when possible or dismantled following all fittings and welding to obtain blasting and coating of the joint surfaces

b. Apply 1 coat inorganic zinc silicate primer coating (F-3) @ 65-75 Microns DFT minimum (maximum – 75 microns).

c. Apply 2 coats (F- 5) of Heat resistant silicon aluminum finish paint @ minimum 20 microns DFT per coat = 2 X 20 = 40 microns (maximum 2 X 25 = 50 microns).

Total DFT: 105 Microns minimum: 125 microns maximum.

Note : coating having operating temperature less than 120 degree shall be coated as specified in respective Discipline Spec.

13.4.4 Equipment with surface temperature above 400°C (752°F),

a. Surface Preparation: Near white metal shot/grit blasting as per SSPC-SP-10 or Sa 2 ½ of SIS-05-5900/ISO 8501 –1:2001 with a 40 – 60 microns anchor pattern. Items with metal to metal joints shall be seal welded prior to blasting and coating when possible or

dismantled following all fittings and welding to obtain blasting and coating of the joint surfaces

b. Apply 2-3 coats of Heat resistant silicon aluminium finish paint (F-5) (maximum 3 X 20 µm – 25 µm).

Total DFT: 60 µm minimum: 75 µm maximum.

13.5 SECTION D: Internal Surfaces of Tanks and Process Vessels/ Piping/SPM

13.5.1 Coating System No.6: Coating of Internal Surfaces of Tanks and Process Vessels/Piping/SPM

Application	Surface Preparation	Coating System	DFT in µm
System No.6A: Salt Water Service (ballast tanks/internal sea water filled compartments)	Cleanliness: Near white metal shot/grit blasting as Per SSPC-SP-10 or Sa 2 ½ of SIS-05-5900/ISO 8501-1 Surface profile: 60-85µm Max.	*Two coats of Epoxy pigmented with aluminium (F-12) (See Note-3)	150 µm (each coat) Total Min DFT 300 µm.
System No.6B: Hydrocarbon Services: all internal surfaces of Welded tanks handling hydrocarbons/diesel.	Cleanliness: Near white metal shot/grit blasting as Per SSPC-SP-10 or Sa 2 ½ of SIS-05-5900/ISO 8501-1 Surface profile: 50-85µm Max.	*Two coats of Phanolic Epoxy (F-6) (See Note-1)	125 µm – 150 µm (each coat) Total Min. DFT 250 µm.
System No.6C: Fresh Water Services: all internal surfaces of Welded tanks handling portable water having NSF Certificate	Cleanliness: Near white metal shot/grit blasting as Per SSPC-SP-10 or Sa 2 ½ of SIS-05-5900/ISO 8501-1 Surface profile: 50-85µm Max	Two coats of Solvent free Epoxy. (F-10) (See Note-2)	250 µm – 300 µm (each coat) Total Min DFT 500 µm

*Note-1: Certified to NSF / ANSI Standard.

*Note-2: Paint shall be tested and certified according to AS/NZS4020:2005 or UL classification in accordance with ANSI/NSF Standard for potable water.

Note-3: Paint shall be for PSPC for water ballast tank according to IMO Res .MSC 215.

Note-4: Paint System 6C: Potable Water Tank made up of SS316, internal surface painting is not required.

Note-5: Paint System 6B: Pressure vessel internal painting shall be followed as per respective Spec of the item provided in the bid. In case, respective specification do not have specific requirement then Paint System 6B is to be followed.

Note-6: Internal Surfaces of Tanks shall be coated as per intended use specified in this specification and respective Discipline Specification provided in the Bid.

13.6 **SECTION- E**: **Carbon steel Metal buildings**

13.6.1 **Equipment Skid**

Structural Steel: Method of surface preparation and acceptable coatings shall be followed as per Coating system No.2 Section – A (13.2.2).

Piping/Mechanical & Process: As per Section – B (13.3)

13.6.2 Structural Framing/Sheeting/Plating: Method of surface preparation and acceptable coatings shall be followed as per Coating System No.2

13.6.2.1 Exposed portions: Method of surface preparation and acceptable coatings shall be followed as per Coating system No.2 except Walkways, escape routes and lay down areas.

13.6.2.2 Unexposed portions covered by insulation, wall Panels, false roofing/ceiling and false flooring:

Coating System No.7: **Painting of Unexposed** portions

Application	Surface Preparation	Coating System	DFT in
Portions covered by insulation, wall Panels, false roofing and false flooring)	Cleanliness: Near white metal shot/grit blasting as Per SSPC-SP-10 or Sa 2 ½ of SIS-05-5900/ISO 8501-1 surface profile: 40-60 µm Max.	Primer Coat: Inorganic zinc silicate primer (F-3)	65 -85 µm
		Sealer Coat/tie coat: One coat of low volume of epoxy Primer (F- 13) as recommended by manufacturer.	25-30 µm
		Finish coat: One coat of high build epoxy with MIO pigments. (F- 1)	125 – 150 µm.
		Total DFT (Minimum)	Total Min DFT 215 µm

13.7 **Section F - Antiskid Painting**

Coating system is applicable on **Steel plated Helideck**, Plated **Laydown Area**, Plated **Walkway**, and applicable area on **plated floor**.

Coating System No.8: **Antiskid Painting**.

Application	Surface Preparation	Coating System	DFT in µm
Topcoat of **Steel plated Helideck, Laydown Area, Walkway (Plated)** & **Plated flooring**	Cleanliness: SSPC –SP5/ Sa 3 Roughness: 75 µm to 100µm	**Extra high** build epoxy coating. Application as recommended by paint Manufacturer. (F-8) Top coat: one coat of Aliphatic acrylic polyurethane (F-9) (Refer General Note 1 to 4 below)	2500-3000 µm 50-60 µm
		Total DFT	2550-3060 µm

General notes:

1. Light colour non-skid aggregates shall be used.
2. Quantity and Particle size of non-skid aggregate shall be as per recommendation of paint manufacture.
3. Aggregates shall have a uniform spread.
4. Coating system No.8 shall have adequate properties related to water absorption, impact resistance, coefficient of friction (**at least 0.65 in wetted condition**), hardness and flexibility.

13.8 Section G : Passive Fire Protection

The recommended use for this product is for fireproofing of steel beams below cellar deck, Deck Legs, Jacket legs & braces, pipes, vessel skirts, bulkheads etc. for fire rating as per Fire Safety Study Report.

The epoxy intumescent coating shall provide pool and jet fire protection minimum one hour for well platform & two hours for Process platform.

Coating thickness shall be as per recommended by paint Manufacturer to obtain desired Fire rating based on safety study.

Base coat & Top coating on top of the passive fire protection shall be compatible with the passive fire protection coating. No hot work shall be done after fireproofing material is installed. Procedure for application shall be as per manufacturers' quality and application manual.

13.8.1 ***Coating System No.9**: Epoxy Based Passive Fire Protection system (Epoxy Intumescent Coating)

Application	Surface Preparation	Coating System	DFT in µm
Carbon steel – Structural steel	Cleanliness: Near white metal shot/grit blasting as Per SSPC-SP-10 or Sa 2 ½ of SIS-05-5900/ISO 8501-1 surface profile : 40-60 µm Max.	Primer Coat: Inorganic zinc silicate primer (F-3)	65 -85 µm
		Sealer Coat/tie coat: Low volume epoxy primer as recommended by paint manufacturer (F-13)	25-30 µm
		Top Coat: Thickness of Fire proofing coating shall be provided by Manufacturer for the desired Fire Rating	

		(as per safety study). Coating material F-7.	

*Note: Epoxy Intumescent Coating shall be applied over a suitably primed substrate as per Recommendation of paint manufacturer. Procedure for application shall be as per Manufacture's Quality & application manual.

Epoxy Intumescent Coating shall be top coated to meet colour schemes & finish and as per recommendation of paint manufacturer.

The fire ratings of Epoxy Intumescent Coating shall be obtained from Certification Agencies like UL, LRS, DNV, BV, etc. and submitted.

No hot work shall be carried out after completion of Fire proofing coating.

13.9 **Deleted**

13.10 **Section H**: **Miscellaneous items**

13.10.1 Pipe Support: I-Rod Pipe Support System

Corrosion Control in Piping Support & anchoring Steel U- Bend shall be carried out as per NACE SP 0108 (Standard Practice – Corrosion Control of Offshore Structure by Protective Coating).

Pipe Support shall also be so designed that there is no water accumulation beneath the pipe to avoid corrosion and deterioration of paint. Design of pipe support shall be such that there shall be enough space for recoating even at the bottom of pipe. One of method is to use semi sphere-shaped **Thermoplastic Pipe Support** Rod under the pipe to facilitate water drainage for future corrosion inspection and access to recoat. Alternative option is to overwrap the pipe wherever the pipe is being supported with a layer of fiber glass reinforced composite tape with adhesive backing. Alternatively contractor may also propose other alternative accordingly.

The U-bend shall be protected with a carbon black pigmented polychloroprene rubber sheath. The rubber sheath shall also provide abrasion resistance. Corrosion inhibitor grease should be applied onto the steel U-bend prior to inserting in the rubber sheath.

Contractor shall address all such aspect in Piping support standard and put up to Company for approval.

13.10.2 **Coating System No.10**: Painting of carbon steel valves.

Application	Surface Preparation	Coating System	DFT in µm

Painting of carbon steel valves with operating temperature up to 150°C.	Cleanliness: Near white metal shot/grit blasting as Per SSPC-SP-10 or Sa 2 ½ of SIS-05-5900/ISO 8501-1 Surface profile: 40-60 µm Max.	Two coats of Phenolic Epoxy (F- 6)	150 – 175 µm (each coat) Total Min DFT 300 µm

13.11 <u>Section I</u>: Extension & Modification on Old Platform and **Repair & Maintenance painting of offshore platform**

i. Extension & Modification on Existing Platform Section A to H shall be followed with following change: Thermally Spread Aluminum Coating (TSAC) System is not applicable.

ii. Repair & Maintenance Painting.

13.11.1 Evaluation of condition monitoring

The Principal will review the condition monitoring reports. Facility components found to be Inaccessible for coating condition inspection should be reported to the responsible Technical Authorities and Management. The barrier coating should be maintained within Two (2) years after the condition of the barrier is found to be not in accordance with the Minimum acceptance criteria. If repair work has not been carried out in time or if severe (Local) corrosion has been observed during condition monitoring, the responsible disciplines should be consulted on further actions to ensure safety and technical integrity.

The condition of all the components of an area/block, including insulation and passive Fireproofing, should be reviewed when drafting scopes of work for maintenance. Consideration should be given to whether it is justified to repair the coating barrier of a Single component only, or whether the whole area/block should be maintained. Specialist Knowledge, including insight into costs and techniques, may be required to make the choice between repair and large-scale maintenance. Specific consideration should be given to and thorough analysis made of areas and/or parts that cannot be inspected or maintained. Appropriate actions, such as risk analyses etc., to ensure long-term integrity should be instigated.

VISIBLE CORROSION DEGREES

The pictures given in ASTM D 610 can be used for the visual determination of the percentage of surface Rusting. These pictures are based on standards such as the European Scale of Degree of Rusting and ASTM D 610.

13.11.2 **:** Maintenance Painting system (applicable for protective coating of wellhead/ process/ LQ platform projects) shall be as under:

Maintenance Protective Coating System	Area of application	Surface Preparation	Surface Profile	Product	DFT
Maintenance Protective Coating System no.1	From 1.0 meter below MSL to bottom of cellar deck framing (excluding underside of cellar deck framing, piping, pipe support, equipment) Including Jacket, Boat landing, Barge Bumper, conductors, Conductor Protector, riser clamps, conductors, conductor guides, sump/pump caissons and all other structural members. Design life for this system shall be 10 years.	SSPC-SP-10 / Sa 2 ½	50-75µm	One coat of fast curing solvent less UV -resistant polyester resin (lsophthalic based reinforced with glass flakes.(F-15)	750 µm
Maintenance Protective Coating System no.2	a) All items from bottom of cellar deck framing (including underside of cellar deck framing & plating (both sides) to top of topside including conductors & conductor guides , external surface of Pressure vessel, X- mas' tree and steel cable trays & structural items including existing handrails except helideck top, walkways, gratings, new handrails, Vent boom, barrier/fire wall facing well head area, crane exhaust b) All piping , equipment & piping supports above & below cellar deck framing c) All other items below cellar deck which are not included in Maintenance Protective Coating System no. 1. Design life for this system shall be 5 years.	SSPC-SP1 to be followed by hand/power tool cleaning SSPC-SP2/ SSPC-SP3.	-	a) 1 coat of 2 component surface tolerant polyamine cured self-priming epoxy @ 100-125µm/coat. (F-2) b) 1 coat of 2 component polyamide cured high build epoxy coating @ 100-125µm/coat.(F-1) c) 1 coat of Acrylic Aliphatic Polyurethane finish paint @ 50-75 µm/coat.(F-9) **Total DFT** **Note:** Carbon Steel Flange and external side of valves shall be painted by Brush applied stripe coat of 2 component surface tolerant polyamine cured self-priming epoxy coating at all corners, edges, pit, welds followed by application of (b) & (c) above .	100-125 µm 100-125 µm 50-75µm 250-325 µm
Maintenance Protective Coating system no.3	Carbon steel floorings For Walkways & Steel Helideck (NACE SP 0108) including markings and lettering.	SSPC-SP-10 / Sa 2 ½	50-75 µm	1 coat of Glass Flake epoxy with anti-skid system as crushed flint / anti slip beads @ 600-650 µm.(F-11) 1 coat of Acrylic Aliphatic	600-650 µm

				PU @ 50-75 µ.(F-9) **Total DFT:** **Colour scheme shall be conforming to CAP 437 offshore helicopter landing areas.**	50-75 µm **650-725 µm.**
Maintenance Protective Coating system no.4	Top coat of fire/barrier walls	SSPC-SP1 to be followed by hand/power tool cleaning SSPC-SP2/ SSPC-SP3.	-	Under epoxy based fire protection system 1 coat of Surface Tolerant Epoxy @ 100 µm.(F-2)	100 µm
				Intumescent paint as per UL 1709. (F-7) Top Coat: Thickness of Fire proofing coating shall be provided by Manufacturer for the desired Fire Rating.	As recommended by Manufacturer Please see Note-3 below.
Maintenance Protective Coating system no.5	Heat resistant paint for flare boom, pedestal crane exhaust 120°C to 400 °C.	SSPC-SP-10/ Sa 2 ½	40-60 µm	Apply 3 coats of Heat resistant silicon aluminium finish paint. (F-5) **Total DFT:**	20-25 µm (each coat) **60-75 µm**
Maintenance Protective Coating system no.6	Carbon Steel Threaded Joints, Flange Joints, Nuts & Bolts.	The surfaces, crevices and corners should be cleaned of rust and dust, loose paint etc. by manual cleaning and compressed air. After cleaning the flange joints, nuts and bolts shall be further protected by **anticorrosive polytetrafluoroethylene (PTFE)/Synthetic tapes** of size suitable for the flanges and studs of the platform as per recommendation of manufacturer.			Not Applicable

Note: 1. Paint manufacturers to be asked to provide their best suitable paint as per the scheme made for the environment and as per warranty and paint life required by ONGC.
2. For any coating scheme, all the coats will be from same manufacturers to avoid any compatibility issues.
3. Epoxy Intumescent Coating shall be applied over a suitably primed substrate as per Recommendation of paint manufacturer. Procedure for application shall be as per Manufacture's Quality & application manual. Epoxy Intumescent Coating shall be top coated to meet colour schemes & finish and as per recommendation of paint manufacturer. The fire ratings of Epoxy Intumescent Coating shall be obtained from Certification Agencies like UL, LRS, DNV, BV, etc. and submitted. No hot work shall be carried out after completion of Fire proofing coating.

13.12 Miscellaneous Accessories

Three identification boards, with name of the platforms shall be provided on North and South faces of the platforms and on the top of the helideck respectively. The details to be written

on the boards shall be approved by the Company. The letters on the boards shall be at least 900 mm in size.

13.13 **Handling and shipping of coated items**

Coated items shall be carefully handled to avoid damage to coated surfaces. No handling shall be performed before the coating system is cured to an acceptable level. Packing, handling and storage facilities shall be of non-metallic type.

14.0 APPLICATION OF THERMALLY SPRAYED ALUMINIUM COATING (TSAC)

14.1 TSAC REQUIREMENTS

14.1.1 Surface Preparation

All the parts to be sprayed shall be degreased according to SSPC-SP 1. The absence of oil and grease after degreasing shall be tested by method given elsewhere in the specification. Thereafter the surface to be abrasive blasted to white metal finish as per NACE 1/SSPC-SP 5 for marine and immersion service. Using SSPC VIS 1, it is to be visually assessed that the blast cleaned surface meets requirement of SSPC-SP 5. Thereafter clear cellophane tape test as per ISO 8502-3shall be used to confirm absence of dust on the blasted surface. Finally blasted surface shall be tested for presence of soluble salts as per method ISO8502-9. Maximum allowable salt content shall be considered 50mg/M^2. (5 micrograms/cm^2) .In case salt content exceeds specified limit, the contaminated surface shall be cleaned by method as per Annex –C of IS 12944-4 (Water Cleaning.) After cleaning the surface shall be retested for salt content after drying.

The blasting media shall be either chilled iron or angular steel grit as per SSPC-AB-3 of mesh size G-16 to G-40. Copper or Nickel slag or Garret as abrasive will also be suitable having mesh size in the range of G16 to G24, conforming to SSPC-AB-1. Mesh size shall be required as appropriate to the anchor tooth depth profile requirement and blasting equipment used. The blasted surface should be having angular profile depth not less than 75 microns with sharp angular shape. The profile depth shall be measured according to NACE standard RP 0287 (Replica Tape) or ASTM D 4417 method B (Profile depth gauge).

For manual blasting one profile depth measurement shall be taken every 10-20 M^2 of blasted surface.

Surface preparation shall be completed in one abrasive blast cleaning operation wherever possible.

If rust bloom (visual appearance of rust) appears on the blast cleaned surface before thermal spraying, the affected area shall be re-blasted to achieve specified degree of cleanliness after which only thermal spraying shall commence. Air blasting pressure at

nozzle shall be normally maintained at 100 psi. Air pressure and media size should be reduced and adjusted to preclude damage/distortion to thin gauge materials. Blasting time on work piece should be adjusted to only clean the surface and cut ~~required anchor tooth~~ with minimum loss of metal. Blast angle should be as close to perpendicular as possible but in no case greater than 30° from perpendicular to work surface. Blasting media must be free of debris, excessive fines, contaminants such as NaCl and sulphur salts (Ref. Clause 14.4.6.1 of this spec.).

14.1.2 Blasting Equipment

The TSAC applicator shall use mechanical (centrifugal wheel) or pressure pot blast cleaning equipment and procedures. Suction blasting equipment shall not be used. Clause No. 14.4.6.2 shall be used to validate clean and dry air.

14.1.3 Feed Stock

The feed stock shall be in the form of wire. The feed stock shall be 99.5% aluminium of commercial purity grade, its composition shall be in accordance with requirement of BS 1475 or ASTM B833 (wrought aluminium and aluminium alloys, wire).

14.1.4 Thickness Requirement

The nominal thickness of finished TSAC shall be 225 microns having minimum value of 200 microns at low thickness areas (valleys) and not more than 250 microns at peak areas.

The finished thickness shall be measured using SSPC-PA 2 type 2 fixed probe gauge (Magnetic Gauge).

14.1.5 Coating Bond Strength Requirement

During CPT coating bond strength requirement shall be as indicated in table 14.2.1.3.

The Minimum Tensile Bond Requirements during production shall be 7 Mpa (1000 psi) for any single measurement.

The TSC tensile bond shall be measured according to ASTM D 4541 using a self-aligning adhesion tester.

For non-destructive measurement: Tensile force shall be measured to the 7Mpa (1000 psi). The tensile force shall then be reduced and the tensile fixture Removed Without damaging the TSAC.

14.1.6 Porosity

All thermally sprayed metallic coatings will have porosity. For thermally sprayed aluminium coatings porosity shall not exceed 15% of total surface area for flame sprayed coating and 8% for arc spray coating.

14.2 THERMAL SPRAY APPLICATION PROCEDURE

Thermally spread Aluminium coating shall be applied by either Flame spray or Arc spray method and shall refer to Clause No. 13.2.1 for application area/zone.

14.2.1 Equipment set up

14.2.1.1Thermal spray equipment shall be set up calibrated, operated (1) according to manufacturer instructions/technical manuals and also TSAC applicators refinement thereto and (2) as validated by Procedure Qualification.

14.2.1.2 Spray parameters

Spray parameters and thickness of each crossing pass shall be set and shall be validated with bend test.

14.2.1.3 Table:

Spray Parameters	Method of Application	
	Arc wire Spray	Flame Wire Spray
Arc voltage	27 V	-
Air pressure	80 psi	80 psi
Steel surface cleanliness	NACE-1 white metal	NACE-1 white metal / or Near white metal
Steel surface profile	75 microns (minimum)	75 microns (min.)
Arc current	250-280A	-
Coating thickness	225 microns (nominal)	225 microns(Nominal)
Coating adhesion	> 1500 psi (Total coating),see 3.1.4	>1000 psi
Coating porosity	Less than 8%	Less than 15%.
Spray distance (spray Gun work piece)	6-8”	5-7”
Spray Pass width	40mm	20 mm

The above parameters to be validated with a bend test by the contractor before start of work (for detail of Bend Test see clause No. 14.4.5 of this Spec.)

14.2.2 **Post Blasting Substrate condition and thermal spraying period.**

14.2.2.1 The steel surface temperature shall be at least 5°C above dew point of ambient air temperature. Steel substrate surface temperature shall be recorded by with a contact pyrometer.

Thermal spraying should commence within 15 minutes from the time of completion of blasting

14.2.2.2 Holding Period

Time between the completion of final anchor tooth blasting and completion of thermal spraying of blasted surface should be no more than four hours.

14.2.3 Pre-Heating

For flame spraying, the initial starting area of 1-2 square feet to be preheated to approx.120° C to prevent condensation of moisture in the flame on the substrate. For arc spraying the preheating is not required.

14.2.4 Thermal spraying

Spraying should commence only after validation of equipment set up by procedure qualification test and spray parameter validation tests described in Clause No. 14.5 and 14.4.5 respectively. **Thermal spraying must commence within 15 minutes from the time of completion of blast cleaning.**

The specified coating thickness shall be applied in several crossing passes. The coating bond strength is greater when the spray passes are kept thin. Laying down an excessively thick spray pass increases the internal stresses in TSAC and decreases the bond strength of total TSAC. The suitable thickness for crossing passes shall be determined by procedure qualification test.

For manual spraying, spraying to be done in perpendicular crossing passes to minimize thin spots in coating. Approx. 75-100 microns of TSAC shall be laid down in each pass.

The surface geometry of the item or area to be sprayed should be inspected before application. The spraying pass and sequence shall be planned according to following.

- Maintain Gun as close to perpendicular as possible and within ± 30°C from perpendicular to the substrate.

- Maintain nominal stand-off distance and spray pass width as given below:

Table 14.2.4.1:

Spray method	Standoff (Inches)	Spray pass width (Inches)
Arc Wire	6 – 8	1 ½ inch (40mm)

Flame wire	5 – 7	¾ inch (20mm)

14.2.4.1 Rust Bloom (Visual appearance of rust or Discoloration)

If Rust bloom appears on the blasted surface before thermal spraying, the affected area shall be re-blasted to achieve the specified level of cleanliness.

If Rust bloom in form of discoloration, or any blistering or a degraded coating appears at any time during application of TSAC, then spraying shall be stopped and acceptable sprayed area shall be marked off. The unsatisfactory areas shall be repaired to the required degree of surface cleanliness and profile.

Blast the edges of the TSAC to provide for 2-3" feathered area overlap of the new work into existing TSAC.

Then apply TSAC to the newly prepared surfaces and overlap the existing TSAC to the extent of feathered edge so that overlap is a consistent thickness.

14.2.4.2 Masking

Masking all those parts and surfaces which are not required to be thermally sprayed as instructed by purchaser should be inspected by applicator to ensure that they are properly marked and covered by purchaser.

Complex geometries (flanges, valve manifolds, intersections) shall be masked by applicator to minimize overspray i.e. TSAC applied outside spray parameters (primarily gun to substrate distance and spray angle).

14.2.4.3 TSAC Finish

The deposited TSAC shall be uniform without blisters, cracks, loose particles, or exposed steel as examined with 10 X magnification.

14.3 SEALER

Sealant shall be applied after satisfactory application of TSAC and completion of all testing and measurements of the finished TSAC as per clause No.14.4 of this specification.

For shop work Sealer shall be applied immediately after thermal spraying and for field work sealer shall be applied within 8 hours. The sealcoat shall be thin enough to penetrate into the body of TSAC.

The materials for sealing the metal coating shall be:

- Two-component epoxy for operating temperatures below 120 °C (F-13).
- Aluminium silicone above 120 °C (F-14).

Volume solids in the sealers when applied shall be 15 % nominal. The overlay of sealer should be less than 38 µm (1.5 mil) on the TSA coating after application.

The sealer should have a contrasting colour to the TSA to aid visual inspection.

During application of seal coat, complete coverage shall be ensured by visual observation.

14.4 TESTING AND MEASUREMENT SCHEDULE

14.4.1 Surface Finish

That the blasted cleaned surface meets the required criteria (NACE 1/SSPC-SP 5) shall be visually inspected using SSPC-VIS 1. The clear cellophane-tape test shall be used to confirm absence of dust or foreign debris on the cleaned surface.

14.4.2 Blast Profile Measurement: (In-Process testing during actual production before application of TSA coating)

The angular profile depth measurement shall be done by profile tape as per method NACE Standard RP 0287 or ASTM D 4417 method B (Profile depth gauge micrometre). Spot measurement shall be carried out every 15m^2 of blasted surface. At each spot three measurements shall be taken over an area of 10 cm^2 and average of measurements to be recorded and reported.

If profile is <75 microns blasting shall continue till greater than 75 microns depth profile is achieved.

14.4.3 TSAC Thickness (In-Process Testing For finished coating during regular production)

14.4.3.1 TSAC finished thickness shall be measured using SSPC-PA 2 type 2 fixed probe gauge.

14.4.3.2 For flat surfaces, measurements shall be taken along a straight measurement line; one measurement line for every 15 m^2 of applied TSAC shall be selected along which 5 measurements to be taken at 25 mm internal and average to be reported.

14.4.3.3 For curved surface or complex geometry, 5 measurements shall be taken at a spot measuring 10 cm^2 in area. One spot to be taken for every 15 m^2 of applied TSAC area.

14.4.3.4 The TSAC thickness in surface changes or contour changes, welds and attachments shall be also measured and reported.

14.4.3.5 If TSAC is less than specified minimum thickness, apply additional TSAC until specified thickness range is achieved.

14.4.3.6 All locations and values of TSAC thickness measurements shall be recorded in Job Record (JR).

14.4.4 Tensile Bond Testing (In-Process testing for finished coating during regular production)

- Tensile Bond strength of the TSAC finish coat shall be determined according to ASTM D 4541 using a self-aligning adhesion tester.
- One measurement shall be made every 50 m2. If tensile bond at any individual spot is less than 1000 psi for flame sprayed coating and 1500 psi for arc sprayed coating the degraded TSAC shall completely remove and reapplied.
- The tensile bond portable test instrument to be calibrated according to ASTM C 633.

14.4.5 Bend Tests

Bend test shall be carried out at beginning of each work shift. Bend tests shall also be conducted on sample coupons before start of thermal spraying work to qualify the following as mentioned earlier in this specification.

- To qualify spray parameters and thickness of each crossing pass.

14.4.5.1 Test Procedure

a) Five corrosion control steel coupons each of dimension 50 mm x 150 mm x 1.25 mm thick are to be prepared.

b) Surface shall be prepared by dry abrasive blast cleaning as per this specification.

c) TSAC shall be applied as per specified thickness range. TSAC should be sprayed in crossing passes laying down approx. 75-100 microns in each pass.

d) TSAC applied coupons shall be bent 180° around a 13 mm diameter mandrel.

e) Bend test shall be considered passed if, on bend radius there is

- No cracking or spalling or lifting by a knife blade from the substrate.
- Only minor cracking that cannot be lifted from substrate with a knife blade.

f) Bend test fails if coating cracks with lifting from substrate.

14.4.6 Tests for blasting media, blasting air

14.4.6.1 Blasting Media (For every fresh batch of media and one random test during blasting)

a) Blasting Media shall be visually inspected for absence of contamination and debris using 10 X magnification.

b) Inspection for the absence of oil contamination shall be conducted using following procedure:

- Fill a small clean 200 ml bottle half full of abrasive.
- Fill the bottle with potable water, cap and shake the bottle.
- Inspect water for oil film/slick. If present, the blasting media is not to be used.

c) Soluble salt contamination if suspected shall be verified by method ASTM D 4940 if present media is to be replaced.

d) Clean blasting equipment, especially pot and hoses and then replace blasting media and retest.

14.4.6.2 Test for Blasting Air (Once Daily before start of blasting and once at random during blasting)

The air for blasting shall be free from moisture and oil. The compressor air shall be checked for oil and water contamination per ASTM D 4285.

14.4.7 Test for presence of oil/grease and contamination

The steel substrate after degreasing as per SSPC-SP 1 shall be tested as per following procedure to validate absence of oil and grease contamination.

a) Visual inspection - Continue degreasing until all visible signs of contamination are removed.

b) Conduct a solvent evaporation test by applying several drops or a small splash of residue- free trichloromethane on the suspect area especially pitting, crevice corrosion areas or depressed areas. An evaporation ring formation is indicative of oil and grease contamination.

Continue degreasing and inspection till test is passed.

14.5 TSAC APPLICATOR QUALIFICATION

Following tests to be carried out as part of procedure qualification test for the applicator.

- Thickness measurement

- Coating bond strength
- Porosity test
- Bend strength

TSAC applicator's surface finishing and application process and equipment set up, calibration and operation shall be qualified by application of TSA on a reference sample which shall be used as a comparator to evaluate the suitability of application process. Only that applicator will be permitted to carry out the work when test specimens coated by the applicator meets the desired requirements as cited below.

The sample shall be made of a steel plate measuring approx. 18"x 18" x ¼" thick. If the actual work is less than ¼" thick then the sample to be made from material of representative thickness.

The surface preparation, TSAC application shall be made with actual field equipments and process/spray parameters and procedures as per the specification. The depth profile of blasted surface, TSAC coating thickness for each cross pass and total thickness range shall be as per specification.

The surface preparation and thermal spraying shall be carried out in representative environmental conditions spraying with makeshift enclosure.

14.5.1 After application of coating, thickness and tensile bond measurements shall be made in following manner.

- Divide the sample piece into four quadrants.
- Measure thickness along the diagonal line of each quadrant.
- Four each quadrant five in-line thickness measurements at 1" interval shall be done using SSPC-PA 2 type 2 fixed probe gauge. Thus a total of four "five in line" thickness measurements are to be done for the whole sample.
- One tensile bond measurement using ASTM D 4541 type III or IV portable self-aligning test instrument to be done at centre of each quadrant. Total of 4 measurements for the sample.
- One porosity evaluation test by Metallographic examination shall be conducted to demonstrate the achievement of porosity within the limits specified. Sample shall be prepared for Metallographic examination as per ASTME – 3.
- The procedure shall be considered qualified if thickness and tensile bond strength and porosity values meets the specification requirement.

14.5.2 Bend test**:** Bend test shall be carried out as detailed at Clause No. 14.4.5 of this specification.

- Applicators thermal spray equipment set-up, operation and procedure of application including in-process QC checkpoints adopted during procedure qualification as described above should be always subsequently followed during entire duration of work.

14.6 Documentation

The following information shall be provided by TSAC applicator before award of work.

- TSAC application process consisting of equipment capabilities and their technical parameters, feed stock material and source of procurement.

- Detailed application procedure and in-process quality control check points for (a) surface preparation (b) thermal spraying (c) seal coats.

- Type and specification of instruments to be deployed for measurement of blast profile depth, TSAC thickness and tensile bond.

- Paint manufacturer data sheet for the selected sealing coat to be applied.

14.7 **RECORDS**

- The TSAC applicator shall maintain job record to record production and QC information. All the results of the tests and quality control checks shall be entered in the record for each component/part thermally sprayed. All the result of tests (thickness, tensile bond, bend tests) and other validation tests (e.g. procedure qualification test, test for surface cleanliness after abrasive blasting, test for cleanliness of abrasives and air) shall also be recorded and duly signed by owner.

- All the information mentioned in Clause no.14.6 above should also form part of the Job record.

- Any modification affected after procedure qualification in the procedure, QC, spray parameter, equipment spec to the original information (submitted before award of the work) must also form part of Job record.

14.8 **WARRANTY**

The TSAC applicator shall warrant the quality of material used by providing the purchaser with a certificate of materials used to include

- Spray feed stock: Alloy type/designation, Lot Number, wire diameter, chemical analysis, name of supplier, manufacturer.

- Sealant: Name of manufacturer, application data sheet.

14.9 SAFETY

The TSAC applicator shall follow all safety procedures required by the purchaser/owner. Owner shall also give compliance requirement to be followed by applicator. The applicator shall follow all appropriate regulatory requirements.

14.10 CODES AND STANDARDS

This specification shall apply in case of conflict between specification and following applicable Codes & Standard:

AWS C.2.17	Recommended Practice for Electric arc Spray.
ASTM C 633	Test Method for Adhesive/Cohesive Strength of Flame Sprayed Coatings.
ASTM D 4285	Method for indicating Oil or Water in Compressed Air.
ASTM D 4417	Test Method for Field Measurement of Surface Profile of Blasted Steel.
BS 2569	Specification for Sprayed Metal Coating.
NACE Standard RP 0287	Field Measurement of Surface Profile of Abrasive Blast Cleaned Steel Surfaces Using a Replica Tape.
ASTM D 4541	Test method for Pull-Off Strength of Coating Using Portable Adhesion Testers.
ANSI/AWS C2.18	Guide for the Protection of Steel with Thermal Spray Coatings of Aluminium, Zinc and Their Alloys and Composites.
NACE No. 12/AWS C2.23M/SSPC-CS	Specification for the application of thermal spray coatings (Metallizing) of aluminium, zinc, and their alloys and composites for the corrosion protection of steel.
SSPC Publication	The inspection of coatings and linings: A Handbook of Basic practice for Inspectors, Owners, and Specifiers.
SSPC-AB 1	Mineral and Slag Abrasives.
SSPC-AB 3	Ferrous Metallic Abrasives.
SSPC-PA 1	Shop, Field, and Maintenance Painting of Steel.
SSPC-PA 2	Measurement of Dry Coating Thickness with Magnetic Gages.
NACE No. 1/SSPC-SP 5	White Metal Blast Cleaning.
NACE No. 2/SSPC-SP 10	Near –White Metal Blast Cleaning.

SSPC-VIS 1	Guide and Reference Photographs for Steel Surfaces Prepared by Dry Abrasive Blast Cleaning.

14.11 Suggested List of TSA applicators

1) *Metallizing Equipment Corporation, Jodhpur, India*
2) *Larsen & Toubro Ltd (Eutectic division), New Delhi, India*
3) *Chemtreat India Ltd, Navi Mumbai, India*
4) *Deepwater MPE, Malaysia*
5) *Associated Thermal Spray, Ahmedabad, India*
6) *M/S PS Coatings Pvt. Ltd, New Mumbai, India*
7) *M/S NPCC, Abu Dhabi*
8) *M/S McDermott, Jebal Ali, Dubai*
9) *M/S PTSC, Vietnam*

TSAC coating shall be applied to bottom of bridge including bottom of deck plating of bridge & piping.

Other applicators will also be acceptable if they qualify the applicator qualification procedure given in the specification. If any one of the above suggested applicator is selected, even then he has to perform the qualification test before commencing of the work.

15.0 COLOUR SCHEDULE

15.1 Table No.

Sr. No.	Item to be Painted	Finish Coat Colour	Colour Code No.
A	**SPLASH ZONE**		
1	All areas coated with XHB Glass flake reinforced Epoxy	Golden Yellow	RAL 1004
2	Handrails & Ladders		
B	**ATMOSPHERIC ZONE-I & II**	Golden Yellow	RAL 1004
1	All areas coated with System 2 (Structural steelwork)	Golden Yellow	RAL 1004
2	Handrails and ladders	Golden Yellow	RAL 1004
3	Buildings (outside surfaces)	Spanish Tile Red	RAL 3000
4	Overhead Obstructions	Golden Yellow with Black Strip	RAL 1004 &

			RAL 9012
5	Helideck top surface (marking colour shall be as per CAP437 ,(7th Edition) guideline)	Dark Green	RAL 6020
6	Walkway of Helideck	Dark Green with White side strips	RAL 6020+ RAL NO.9010
C	**EQUIPMENT, PIPING AND TUBING**	Natural Grey	RAL 7038
1	Pumps and Drivers	Dark Grey or Factory Finish	RAL 7039
2	Compressors and Drivers	Dark Grey or Factory Finish	RAL 7039
3	Generators and Drivers	Dark Grey or Factory Finish	RAL 7039
4	Water Makers	Light Blue or Factory Finish	RAL 5012
5	Tanks and Vessels	White	RAL 9003
6	Electrical Equipment incl. Cable Trays	Aluminium Grey	RAL 9007
7	Electrical Danger Points	Orange	RAL 2004
8	Instrumentation	Factory Finish	--------
9	Fire Fighting Equipment	Red	RAL 3000
10	First Aid Equipment	Signal Green	RAL 6032
11	Risers and J Tubes	Aluminium Grey	RAL 9007
12	Process Piping Systems	Refer Table 15.2 of this specification	

The name tag no. and service of all equipment should be stencilled in capital letters 40 – 50 mm in height on the equipment. The Colour shall be black or white and in contrast to the colour on which the lettering is superimposed.

15.2 Pipe Colour Coding

All piping shall be colour coded to identify service in accordance with the following criteria. The colour coding shall comply with the schedule in Table 15.

TABLE No. 15.2: PIPE COLOUR CODING (PROCESS) COLOUR SCHEME FOR PRODUCT BEING PROCESSED

Sr. No.	Description	Colour code Identification	
		Base/Ground Colour (Colour code no.)	Colour Bands 1)1st Band 2)2nd Band
GASES			
1	Sour Gas	Canary Yellow (RAL NO.1012)	1)Grey(RAL NO.7000) 2)Dark Violet (RAL NO.5022)
2	Sweet Gas	Canary Yellow (RAL NO.1012)	Grey (RAL NO.7000)

3	Fuel Gas	Canary Yellow (RAL NO.1012)	1)Light Brown(RAL NO.8025) 2)White(RAL NO.9010)
4	Residue	Canary Yellow (RAL NO.1012)	1)Oxide Red(RAL NO.3009) 2)White(RAL NO.9010)
5	Flare Gas	Canary Yellow (RAL NO.1012)	Aluminum(RAL NO.9006)
6	Regenerated Gas	Canary Yellow (RAL NO.1012)	1)White(RAL NO.9010) 2)Dark Violet(RAL NO.5022)
LIQUIDS			
1	Crude Oil	Light Brown (RAL NO.8025)	No Band
2	High Speed Diesel	Light Brown (RAL NO.8025)	1)Brilliant Green(RAL NO.~~6038~~, 6017) 2)White(RAL NO.9010)
3	Hydrocarbon Condensate	Dark Admiralty Grey(RAL NO.7031)	1)Signal Red (RAL NO.3020) 2)Black(RAL NO.9005)
4	Chlorine	Dark Violet(RAL NO.5022)	Signal Red(RAL NO.3020)
5	Triethyline Glycol (TEG)	Dark Admiralty Grey (RAL NO.7031)	1)Sea Green (RAL NO.6018) 2)Yellow (RAL NO.1003)
6	Oily Water	Black (RAL NO.9005)	No Band
7	Dosing Chemical	Dark Admiralty Grey (RAL NO.7031)	No Band
8	ATF	Dark Admiralty Grey(RAL NO.7031)	Black(RAL NO.9005)
UTILITY ITEMS: WATER			
1	Drinking Water	Sea Green (RAL NO.6018)	1)French Blue (RAL NO.5002) 2)Signal Red(RAL NO.3020)
2	Domestic Hot Water	Sea Green (RAL NO.6018)	Light Green(RAL NO.6021)
3	Cold Water from Storage Tank	Sea Green (RAL NO.6018)	1)French Blue (RAL NO.5002) 2)Canary Yellow(RAL NO.1012)
4	Demineralized Water	Sea Green (RAL NO.6018)	Gulf Red(RAL NO.8019)
5	Cooling Water	Sea Green (RAL NO.6018)	French Blue (RAL NO.5002)
6	Condensate Water	Sea Green (RAL NO.6018)	1)Light Brown (RAL NO.3009) 2)Signal Red(RAL NO.3020)
7	Wash Water	Sea Green(RAL NO.6018)	Canary Yellow(RAL NO.1012)
8	Fire water	Fire Red(RAL NO.3000)	Crimson Red(RAL NO.3007)

9	Sea Untreated water	Sea Green(RAL NO.6018)	White(RAL NO.9010)
10	Waste Water	Sea Green (RAL NO.6018)	1)Canary Yellow(RAL NO.1012) 2)Signal Red(RAL NO.3020)
11	Treated Water	Sea Green (RAL NO.6018)	Light Orange(RAL NO.2003)
UTILITY ITEMS: COMPRESSOR			
1	Compressed Air (upto 15kg/sq.cm)	Sky Blue (RAL NO.5015)	-----
2	Compressed Air (above 15kg/sq.cm)	Sky Blue(RAL NO.5015)	Signal Red(RAL NO.3020)
3	Plant Air	Sky Blue(RAL NO.5015)	Silver Grey(RAL NO.7001)
4	Instrument Air	Sky Blue(RAL NO.5015)	French Blue(RAL NO.5002)
5	Drainage	Black(RAL NO.9005)	------
UTILITY ITEMS: OILS			
1	Lubricating Oil	Light Brown(RAL NO.8025)	Light Grey(RAL NO.7004)
2	Hydraulic Power	Light Brown(RAL NO.8025)	Dark Violet(RAL NO.5022)
UTILITY ITEMS: GASES			
1	Acetylene	Canary Yellow (RAL NO.1012)	Service Brown(RAL NO.8022)
2	Nitrogen	Canary Yellow(RAL NO.1012)	Black(RAL NO.9005)
3	Oxygen	Canary Yellow(RAL NO.1012)	White(RAL NO.9010)
4	Carbon di Oxide	Canary Yellow(RAL NO.1012)	Light Grey(RAL NO.7004)

Note: Any product which is not covered will be governed as per colour code standard IS: 2379/other standard under reference.

15.3 Colour Bands for Identification & Size of pipe

15.3.1 Identification & Size

The Width of colour band shall confirm to the following (As per IS 2379)

Sr. No.	Nominal Pipe Size	Width : L (mm)
1	80NB and below	25

2	Over 100 NB upto 150 NB	50
3	Over 200 NB upto 300 NB	75
4	Over 350 NB	100
The relative proportional width of first colour band to be subsequent bands shall be 4:1. Maximum stripe spacing shall be 150mm		

15.3.2 Application

Color Bands shall be applied at the following location as per # 7.3 of IS: 2379

- Battery Limit points
- Intersection point and change of direction points in piping ways
- Other point such as midway of each piping way, near valves, junction joints of service appliances, walls on either side of pipe culverts
- For long stretch yard piping at 50 m interval and at start and terminating points

Color bands shall be arranged in the sequence shown in table below and sequence follows the direction of flow.

For Insulation pipes, nominal pipe size means the outside diameter of insulation.

15.4 Colour of Valves

The Valves shall be painted as per As per IS: 2379

Table No. 15.4

Sr. No.	Condition	Colour of Valves
1	Valves on Fire fighting	Red (RAL NO.3000)
2	Valves on Pipe carrying Hazardous Material	Golden Yellow with black strips (RAL NO.1004) & (RAL NO.9005)
3	Valves on Water carrying piping (Potable or Non-Potable)	French Blue(RAL NO.5002)
4	All Other Piping	Same colour as the main piping

15.5 SIZE OF FLOW DIRECTION ARROWS

Pipes shall be marked with arrow to indicate flow direction as per the isometrics. Arrow markers shall be placed at starting / termination point of piping above each floor generation at a height of about 1.5m from floors. The service or the origin place shall also be marked in the same colour, stenciled in capital letters 40 - 50 mm in height. The colour or arrow shall be black or white and in contrast to the colour on which they are superimposed. The arrow indicating flow

directions as per piping isometrics shall be marked on both sides of the pipe 180 deg. apart at an interval of 3 to 6 meters or less depending on pipe length.

Size (in mm) of the arrow shall be either of the following:

FOR PIPES 8" NB & BELOW FOR PIPES 10''NB AND ABOVE

15.6 Colour Schedule for Fire Fighting Equipment:

Fire Equipment/ Fire Fighting Equipment colour shall be in accordance with following criteria as detailed in table 15.6

Table No. 15.6

Sr. No.	Item/Application	Standard Painting Color	RAL No.
1	A. Extinguishers: Water based,foam,DCP,CO2	Fire red Paint	(RAL NO.3000)
	B. all fire tenders /jeep, fire engines(except foam tank, foam piping & nitrogen cylinder)		
	C. Fire tender, water piping/wet risers. Fire hose reel box		
	D. Fire tender water pump & engine/water pipeline in engine & pump		
	E. DCP tank & DCP piping		
2	Foam tank & foam piping/nitrogen cylinder	Dark Admiralty Grey	(RAL NO.7031)
3	Driver compartment & inside of the lockers	Pale Cream	(RAL NO.9001)
4	Chassis & wheel arches	Black	(RAL NO.9005)
5	Fire services insignia & identity nomenclatures	Canary yellow with black border on sides of sides of the vehicle/equipment	(RAL NO. 1012) & (RAL NO. 9005)

16.0 RECOMMENDED LIST OF PAINT MANUFACTURERS

Refer updated Vendor List in ONGC Website.

17.0 PROCEDURE FOR APPROVAL OF NEW COATING MATERIAL

Following procedure recommended is to be followed for approval materials Manufactured by new manufactures (indigenous and foreign):

1. The manufacturer should arrange testing of the coating materials as per the List of tests given in para 5 below from one of the reputed Government Laboratories.

2. Samples of coating materials should be submitted to the Govt. Laboratory in sealed containers with batch number and test certificate on regular format of manufacturer's testing laboratory.

3. All test panels should be prepared by the Govt. testing agency-colored photographs of test panels should be taken before and after the test and should be enclosed along with test report.

4. Sample batch number and manufacturers test certificate should be enclosed along with the report. Test report must contain detail of observations and rating if any as per the testing code. Suggested Govt. laboratories are:

   RRL, Hyderabad

   HBTI, Kanpur

   DMSRDE, Kanur

   IIT, Bombay

   BIS, Laboratories

   UDCT, Mumbai

   Or Other International Test houses of Repute to be approved by the Company.

5. Manufacturers should intimate the company, details of sample submitted for testing, name of Govt. testing agency, date. Contact personnel of the Govt. testing agency. At the end of the test the manufacturer should submit the test reports to the Company for approval. The manufacturer(s) shall be qualified based on the results of these tests and the Company's decision in this regard -shall be Final and binding on the manufacturer. All tests required for evaluation of acceptance coating materials for offshore application shall be as per the relevant ASTM standards.

18.0 PAINT PERFORMANCE GUARANTEE OF PROTECTIVE COATING:

Contractor shall provide performance Guarantee for protective coating for the period as specified in Volume – I of Bid Document.

-----END----

GENERAL SPECIFICATION FOR MATERIAL, FABRICATION AND INSTALLATION OF STRUCTURE

Prepared / Revised By	Reviewed By	Approved By	Total No. of Pages	Date	Rev. No.
MRS/KCD	RMK	GRP	73	27.03.2012	5
KCD	SKJ	RMK	81	21.07.2014	6
MRS	SKJ	RKJ	85	19.06.2015	7
RCS	MRS	RKJ	77	24.08.2016	8
SK	MRS	RKJ	76	04.08.2017	9
KKD	MRS	RKJ	75	06.08.2018	10
SK	KKD	SG	77	31.10.2019	11
SK	GM	KCD	75	27.06.2022	12
GG	GM	KCD	75	20.12.2022	13
MK	GM	KCD	75	05.07.2023	14

CONTENTS

1.0 MATERIAL

2.0 FABRICATION

3.0 INSTALLATION

4.0 AS-BUIT DOCUMENTATION

1. MATERIAL

1.0.1 Scope & General

This specification defines the minimum requirements for the manufacture and supply of structural materials for uses in the fabrication of the Platform.

If a deviation from these specifications or a substitution of material is sought, the Contractor shall submit written request to Company along with necessary supporting documents including test results, manufacturer's certificate etc., and allowing reasonable time for evaluation without disruption of the construction schedule. It shall be the Contractor's responsibility to satisfy the Company that the proposed deviation or substitution will in no way be detrimental to the quality of the works intended in the bid package. The Company may ask for additional information & testing/retesting which the Company may consider necessary, which the Contractor shall carry out at no extra time and cost to the Company.

1.0.2 CODES AND STANDARDS

1.0.2.1 Mandatory Indian Statutory requirement.

This document has been prepared to the International standards detailed hereunder. The Contractor shall ensure that the work is executed in accordance with all mandatory Indian Statutory and regulatory requirements.

1.0.2.2 Codes and Standards & Regulations

The requirements of the latest published versions of the following listed Codes, Recommended Practices, Specifications and standards shall be complied by the Contractor.

1.0.2.3 American Society of Mechanical Engineers (ASME)

Sr.no.	Code no.	Description
1	ASME B1.1-2019	United Inch Screw Threads (UN, UNR & UNJ Thread Forms).
2	ASME B18.2.2 - 2015	Square and Hex Nuts Nuts for general Applications: Machine Screw Nuts, Hex, Square, Hex Flange, and Coupling Nuts (Inch Series).
3	ASME B18.21.1 - 2009 (R2016)	Lock Washers Washers: Helical Spring-Lock, Tooth Lock, and Plain Washers (Inch Series).
4	ASME A112.6.3 - 2019	Specification for floor and trench drains Floor and Trench Drains.
5	ASME A112.6.4 - 2003 (R2012)	Roof/Deck & Balcony drain Roof, Deck, and Balcony Drains.

1.0.2.4 American Petroleum Institute (API)

S.No.	Code no.	Description
1	API RP 2A	Recommended Practice for Planning, Designing and Constructing Fixed Offshore Platforms – Working Stress Design.
2	API Spec 2B	API Specification for Fabrication of Structural Steel Pipe.
3	API Spec 2H	API Specification for Carbon Manganese Steel Plate for Offshore Platform.
4	API SPEC 2MT1	Specification for As Rolled carbon manganese Steel Plate with improved toughness for Offshore Structure.
5	API RP 2X 2004 Edition	Recommended Practice for Ultrasonic and Magnetic Examination of Offshore Structural Fabrication and Guideline for Qualification of Technicians.
6	API Spec 5L 46th Edition	API Specification for Line Pipe.
7	API Spec 10A 25th Edition, March 2019	Cements and Materials for Well Cementing.
8	ASTM 80	Stainless Steel Chain.
9	API Spec 2F	Specification for Mooring chain.
10	API RP 2FB	Recommended Practice for the Design of Offshore facilities against Fire and blast Loading.

1.0.2.5 American Society for Testing and Materials (ASTM)

Sr.no.	Code no.	Description
1	ASTM A6	Standard Specification for General Requirements for Rolled Structural Steel Bars, Plates, Shapes and Sheet Pilling.
2	ASTM A36	Standard Specification for Carbon Structural Steel.
3	ASTM A53	Standard Specification for Pipe, Steel, Black and Hot-Dipped, Zinc-Coated Welded and Seamless.
4	ASTM A106	Standard Specification for Seamless Carbon Steel Pipe for High Temperature Service.
5	ASTM A109	Standard Specification for Steel, Strip, Carbon (0.25 Maximu Percent), Cold-Rolled.
6	ASTM A123	Standard Specification for Zinc (Hot-Dip Galvanized) Coating on Iron and Steel Products.
7	ASTM A131	Standard Specification for Structural Steel for Ships.
8	ASTM A153	Standard Specification for Zinc-Coating (Hot-Dip) on Iron and Steel Hardware.
9	ASTM A182	Standard Specification for Forged or Rolled Alloy and Stainless Steel Pipe Flanges, Forged Fittings, and Valves an Parts for High-Temperature Service.
10	ASTM A193	Standard Specification for Alloy Steel and Stainless Steel Bolting Materials for High Temperature Service or High Pressure Service and Other Special Purpose Applications.

11	ASTM A194	Standard Specification for Carbon Steel, Alloy Steel, and Stainless Steel Nuts for Bolts for High Pressure or High Temperature Service or Both.
12	ASTM A240	Standard Specification for Chromium and Chromium-Nickel Stainless Steel Plate, Sheet, and Strip for Pressure Vessels and for General Applications.
13	ASTM A276	Standard Specification for Stainless steel bars & Shapes
14	ASTM A307	Standard Specification for Carbon Steel Bolts, Studs, and Threaded Rod 60 000 PSI Tensile Strength.
15	ASTM A312	Stainless Steel Pipes Standard Specification for Seamless, Welded, and Heavily Cold Worked Austenitic Stainless Steel Pipes.
16	ASTM F3125	Standard Specification for High Strength Structural Bolts and Assemblies, Steel and Alloy Steel, Heat Treated, Inch Dimensions 120 ksi and 150 ksi Minimum Tensile Strength, and Metric Dimensions 830 MPa and 1040 MPa Minimum Tensile Strength.
17	ASTM A370	Mechanical Testing of Steel Products Standard Test Methods and Definitions for Mechanical Testin of Steel Products
18	DELETED	DELETED
19	ASTM A500	Standard Specification for Cold Formed Welded and Seamless Carbon Steel Structural Tubing in Rounds and Shapes.
20	ASTM A563	Standard Specification for Carbon and Alloy Steel Nuts (Inch and Metric).
21	ASTM A572	Standard Specification for High - Strength Low-Alloy Columbium –Vanadium Steel of Structural Steel.
22	ASTM A578	Standard Specification for Straight-Beam Ultrasonic Examination of Rolled Steel Plates for Special Applications.
23	ASTM A633	Standard Specification for Normalized High Strength Low Alloy Structural Steel Plates.
24	ASTM A653	Standard Specification for Steel Sheet, Zinc-Coated (Galvanized) or Zinc-Iron Alloy-Coated (Galvannealed) by the Hot-Dip Process.
25	ASTM B695	Standard Specification for Coatings of Zinc Mechanically Deposited on Iron and Steel.
26	ASTM A786	Standard Specification for Hot-Rolled Carbon, Low-Alloy, High-Strength Low-Alloy, and Alloy Steel Floor Plates.
27	ASTM C150	Standard Specification for Portland Cement.
28	ASTM D2000	Standard Classification System for Rubber Products in Automotive Applications.
29	ASTM F436	Standard Specification for Hardened Steel Washers Inch and Metric Dimensions.
30	ASTM D4894	Standard Specification for Polytetrafluoroethylene (PTFE) Granular Molding and Ram Extrusion Materials.

1.0.2.6 American Welding Society (AWS)

Sr.no.	Code no.	Description
1	AWS D1.1	Structural Welding Code – Steel
2	AWS D1.3	Structural Welding Code – steel Sheet
3	AWS D1.6	Structural Welding Code – Stainless steel
4	AWS A 2.4	Standard Symbols For Welding, Brazing, And Nondestructiv Examination

1.0.2.7 American Institute of Steel Construction (AISC)

Sr.no.	Code no.	Description
1	AISC	Manual of Steel Construction.
2	CAP 437 (Latest Edition)	Standards for Offshore Helicopter Landing Areas.

1.0.2.8 Indian Standards Institute (ISI)

Sr.no.	Code no.	Description
1	IS 2062	Hot Rolled Medium and High Tensile Structural Steel – Specification.
2	IS 883	Design of Structural Timber in Building - Code of Practice.
3	IS 269	Ordinary Portland Cement.
4	IS 3502	Steel Chequered Plate – Specification.
5	IS 1786	High Strength Deformed Steel Bars and Wires for Concrete reinforcement.
6	IS 4457	Ceramic Unglazed Vitreous Acid Resisting Tiles.

1.0.2.9 European Standard (EN-10025)

Sr.no.	Code no.	Description
1	BS 8118	Structural use of Aluminium – Parts 1 & 2.
2	EN 755 Parts 1-9	Aluminium and Aluminium alloys- Extruded rod/bar, tube and profiles.
3	EN ISO 3506 Parts 1-2	Mechanical properties of corrosion-resistant Stainless-steel fasteners.
4	EN 10025-3	Hot rolled products of structural steels- Part 3: Technical delivery conditions for normalized/normalized rolled weldable fine grain structural steels.

1.0.2.10 NORSOK Standard

Sr.no.	Code no.	Description
1	C-001	Living Quarter Area.
2	C-002	Architectural components and Equipment.
3	M-001	Material Selection.

1.0.2.11 National Standard Plumbing code

1.0.2.12 DNV RP C204 Design against accidental Loads

1.1 STRUCTURAL STEEL

1.1.1 Delivery

Steel shall be delivered in accordance with the requirements of ASTM A6 and as specified in this document.

1.1.2 Condition of Material

Structural steel to be used shall be new, unused (not reconditioned) and free of defects. Steel plates and rolled shapes shall be free of rolling defects, burrs, rough spots and other surface imperfections. Surface finish for steel surfaces shall be such that only blasting and no grinding is required to achieve a surface acceptable for painting. Plate edges shall be even, smooth, and free of laminations. Edge shearing of plates of a thickness of 25 mm or larger shall not be permitted.

Except where requested by specific supplements, systematic Ultrasonic Testing (UT) of steel plates at fabrication time is not required. However, any delivered plate which fails to meet the maximum discontinuity requirements of AWS D1.1 Section 3.2.3 e.g. 4% rule with adjustments shall be replaced. These rules, written for edge discontinuities, shall apply to the body of the plate, since plates are generally used as rolled tubulars and must provide footprints (i.e. edges) to other tubular where small region outside footprints and edges in accordance with AWS D1.1.

1.1.3 Dimensional Tolerances

Dimensional tolerances of individual tubular sections 457 mm diameter and above shall be in accordance with API 2B. A maximum of 1.5% cold expansion shall be allowed. The use of electric resistance welded (ERW) or spiral welded pipe is prohibited. Only SAW or DSAW tubulars welded with a qualified procedure in accordance with AWS D1.1 or seamless pipe is acceptable for structural use. Hydrostatic testing of structural tubular is not required. Rolled tubulars shall not have more than one longitudinal seam.

1.1.4 Material Storage

All material, whether procured or fabricated, shall be stored above ground on pallets, timber cribbing or similar supports. The material shall be stored above

the level of standing water and be kept free from dirt, grease, paint spray and other foreign matters.

1.1.5 Material Marking

All material shall be identified by marking in accordance with codes & standard and heat numbers / cast number / bloom number / product number and will be in accordance with ASTM A6 wherever applicable. All identification markings shall be clearly visible and capable of remaining intact through the completion of fabrication. The material identification and traceability procedure shall be developed by the Contractor to identify each structural member / component with Heat Number /Cast Number / bloom number / product number to correlate the test certificates. This procedure shall be applicable from its receipt and storage through sub-assembly and final erection. Unidentified material shall not be acceptable in accordance with API RP 2A.

1.1.6 Inspection and Testing

1.1.6.1 Mill Tests and Mill Certificates

All mandatory inspection and testing listed under the basic specification to which the steel is manufactured and all supplementary and additional requirements specified in these specifications for the concerned grade shall be documented to have been satisfied through mill tests and mill test certificates both for Ladle & Product.

One set of all relevant certificates and reports, clearly legible and in the English language shall be submitted by Contractor to Company. SI Units shall be used in all documentation. The mill certificates shall be signed by Manufacturer's Quality Assurance Representative and where specified by Company, an independent Third Party acceptable to Company to state compliance with this specification.

In case of butt welded seam Tubular procured under API 5L / 2B, Mill Test Certificate of the Plate Material shall be obtained and submitted.

1.1.6.2 Contents

The mill certificates and reports shall include all relevant information including, but not limited to the following:

a) **Identification**

Mill Location, Purchase Order and item Number, Date of manufacture, Method of Manufacture, steel making process, Mill Heat / Cast Numbers,

bar or bloom number, plate number, supply condition, dimensions, specification and grade of steel (basic specification).

b) **Composition**

Ladle (Heat) analysis and product analysis with Carbon Equivalent. All elements used in the carbon equivalent formula shall be analyzed and reported. Elements which are not specified for any grade in the respective codes shall not be intentionally added without specific approval from Company prior to manufacture.

c) **Mechanical Properties**

- Tensile strength, Yield Stress, Ultimate strength and Percent elongation.
- Charpy V-notch tests results, (if required).
- Through thickness properties, (if required).
- Strain age test results, (if required).

d) Non-destructive test results, (if required).

e) Details of heat treatment, if performed.

f) Impact testing specimen size, orientation, impact values and test temperature.

g) Reports signifying meeting other specific/ supplementary requirements for the specification for the material.

h) Supplementary information relating to manufacturing process.

1.1.6.3 Material Certification

Original Mill Test Certificate shall be made available to the Company appointed Inspector for verification at the time of inspection. Material with Mill Test Certificates, that do not satisfy the specified requirements herein shall be rejected and removed from the storage area. In case of butt welded seam Tubular procured under API 5L / 2B, Mill Test Certificate of the Plate Material shall be obtained and submitted.

Copy of Original Mill Test Certificate duly signed by TPI/CA shall be submitted with material Traceability as As-Built Documentation.

1.1.6.4 Material Testing

This section gives the minimum requirements of the materials supplied to this specification. Unless stated otherwise, all testing shall be performed in accordance with ASTM A6 "Standard Specification for General Requirements for Rolled Steel Plates, shapes, sheet piling and Bars for structural use" and ASTM A 370 “Mechanical Testing of steel products”.

1.1.7 Ex-Stock Steel

Steel manufactured two years prior to the actual use shall not be accepted. However, in case of any immediate requirement of any small quantity, supply of ex-stock steel in good condition and free from rust and pitting may be offered for Company’s consideration. Such material should be easily identifiable with respect to its Heat / Cast number, Manufacturer’s stamp, colour coding, Grade etc., as given in the mill test certificate. The mill test certificates of such material shall meet the required specification. The Contractor shall satisfy Company by means of additional tests as directed on the company’s inspection at no extra time and cost to the company.

1.1.8 Steel Manufacturing Process

Only product manufactured by the electric arc furnace or the basic oxygen processes is acceptable as structural steel. Bessemer process, rimmed or capped steels are not acceptable. Material for through thickness application shall be vacuum degassed or VAD or ladle refining process while molten. Rejected steels and unidentified steel are not acceptable. Specifically, rejected high strength steel (350 MPa) is not to be substituted for low strength steel (250 MPa).

1.1.9 Class and Types of Structural Steel

Steel material types defined by shape and grade or strength designation consisting of the specified minimum yield strength in MPa. In the case where through thickness properties (TTP) are required for attachments and loads perpendicular to the plate surface, a suffix “Z” has been added. Chemical composition of steel shall be in accordance with the respective standards with supplementary requirements given in Sections 1.1.9.4 and supply conditions given in Section 1.1.9.5 hereunder.

1.1.9.1 Class of Material

Class A

Class A material are suitable for critical applications involving stress concentrations, high restraint, the possibility of plastic strain and lack of redundancy. Charpy impact test in accordance with the specified Standard is

mandatory. Carbon equivalent shall be as per respective standard and specification.

Class B

Class B material are intended for less critical applications but still involve the possibility of plastic strain and therefore the need for impact testing. The material shall meet the Charpy impact test requirement of the specified Standard and in addition, carbon equivalent shall be as per respective standard and specification. The thickness of class B material shall not exceed 63mm.

Class C

Class C materials are those, which have a history of successful applications in welded structures at service temperatures above 0º C, for which impact testing is not required. Applications are for primary and secondary members involving moderate forming, low restraint and modest stress concentrations. Structural redundancy should be provided by the design.

1.1.9.2 Types of Structural Steel

The following is a guideline for the selection of steels for use in offshore structures. Contractor shall use steel type to suit fabrication methods, welding procedure etc., for each structural steel type as specified.

Grades of Steel are covered in this specification are: -

Grade 250: Carbon Steel of Minimum yield strength 240-250 MPa.

Grade 350: Intermediate Strength steel of Minimum yield Strength 340-360 MPa.

High strength steel grade, having specified minimum yield strength (SMYS) of steel exceeding 360 Mpa (52 ksi) shall not be used for offshore platform.

.

1.1.9.3 Table: STEEL TYPE, SHAPE, APPLICATION, GRADE, SPECIFICATION & CLASS

TYPE	SHAPE	APPLICATION	GRADE	SPECIFICATION	API CLASS
1-A	Plate	Plates for minor secondary steel in top side, deck plating, toe plates, etc. Building Wall, Building Floor and Roofing. Plates grating (from cellar Deck & upwards).	250	ASTM-A 36 / IS 2062:E250 Quality – B/C	C
1-B	Plate	Plates for rolling tubular for secondary steelwork, Stiffeners. Plates for profiling for building module	250	ASTM-A-36 / IS 2062 E250 Quality – C	C
1-C	Rolled section	Steel sections with a depth up to 300 mm and used as secondary members. (Including angles, channels, etc.).	250	ASTM-A-36 / IS 2062 E250 Quality – C	C
1-D	Tubular	Seamless tubulars up to 406 mm (16") diameter for Deck truss braces and topside deck, bridge braces, ladders (from cellar deck & upwards), Jacket walkway secondary members and staircase stringer.	250	API-5L-Grade-B/ ASTM-A-106 Grade B	B/C
2-B	Plates	Non-through thickness applications less than 75 mm thick involving tubular above 406 mm diameter for primary steel throughout the structure, like Jacket legs/skirt sleeves, Deck truss, Deck legs other than joint cans, barge bumpers and helideck plating, plate girder, shim plates, bridge braces, Stiffeners, Riser Protector, Boat landing, Piles etc.	350	ASTM-A-131-DH36 / EN 10025-S355 -J2G3/ EN 10025-S355-J2+N/ EN 10025-S355-K2+N API-2H-Gr-50	A
2-C	Rolled Section	For applications of Primary and major secondary steelwork where rolled sections are to be used with a depth above 300 mm	350	ASTM-131-AH36 / EN10025-S355-J2+ AR/N EN 10025:S355J0 ASTM A 572 Gr 50	B
2-D	Tubular	seamless tubular up to 406 mm (16”) diameter for use in substructure braces, truss braces and chords, energy absorbing tubulars in Boat-landing and Barge Bumpers, shock cells Supporting members.	350	API-5L-Grade-X52N, PSL-2	B

.

2-Z	Plates	Typical through thickness applications ("Z") above 19 mm thickness involving primary items at critical design area like Tubular Can Joint Sections, Primary Member, Brace Node Sections, Installation Pad eyes, Crane pedestal, lifting eye and cheek plate, Pile in mudline region, diaphragm plate, beam web plate, beam flange plate, Hanger Clamp etc.	350	API-2H –50Z	A
2-CON	Tubular	Conductor Pipes of all sizes (25mm minimum wall thickness) with single seam.	350	API-5L, Grade X-52N, PSL-2	B
1-Arch	Stainless Steel plate	Exposed to weather – Doors & windows frames & shutters, handrail toe plate / kick plate, grating (in wave zone below Cellar deck).	250	AISI 316/317 *316L/317L (See note-8)	
2-Arch	Galvanized steel sheet	Not exposed to weather-Doors, internal partition, bulkheads, false ceiling	-NA-	ASTM A 653	
3-Arch	Stainless Steel tubes	Handrails & ladders (in wave zone below cellar deck)	250	ASTM A 312 Gr. 316L/317 *316L/317L (See Note-8)	

Notes: -

1. For handrails details, refer Table 1.4.3.3
2. Stiffeners, flange extension plates, ring stiffeners etc. shall be of the same grade as the element to which they are connected.
3. For piles, mud line region is defined as the region based on stress considerations and extends over the negative and positive bending moment regions and includes the under drive and overdrive allowances.
4. All floor plating including cellar Deck & Main Deck shall be of Chequered plates as per approved equipment plan.
5. Fabricated plate girder may be used only when design requirement of beam depth is more than 900mm. Welding of flange-web connection of plate girder shall be full penetration weld only.
6. TMCP Steel material shall not be used for conductor (2-CON)
7. All Stainless steel items wherever used shall be of SS316/ SS317.
8. *All Stainless steel items wherever welding is required shall be of SS316L/ SS317L.

1.1.9.4Supplementary Requirements

Material shall comply with the following supplementary requirements & shall be reported in Mill Test Certificate:

a. 1-A to 1-D Type of steel shall be killed steel.

b. 2-B, 2-C, 2-D, 2-Z & 2-CON Type of steel shall be killed and made according to fine grain practice.

c. Steel material used for grating & handrail shall have silicon content in the range of 0.15 &-0.22% (for good galvanizing)

d. Charpy V-Notch Impact test shall be conducted at (-) 20ºC for Type 2-B steel material with minimum 34 Joules & 24 Joules in Longitudinal & Transverse direction respectively & at 0ºC for 2-C and 2-D material with minimum single value 27 Joules.

e. Percentage elongation with specimen length 200mm shall be minimum 21% and 18% respectively for steel Grade 250 and Grade 350. The minimum percentage elongation shall be 2% more if report is made on gauge length of 5.65 $(So)^{1/2}$. The percentage elongation shall be (Lu-Lo) x 100 /Lo, where Lo= 5.65 x $(So)^{1/2}$, So is the original cross sectional area of gauge length and Lu is the final length.

f. For Type 2-Z, the following shall be applicable**:**

i. All plates shall be **ultrasonically** examined in the final heat treatment condition for defects and discontinuities in accordance with ASTM A-578. Acceptance standard shall be Level-A (**S1** of API Spec 2H*).*

ii. Charpy V-Notch toughness impact test at (-) 40^0C in Transverse direction with minimum single value 34 Joules and average energy value 41 Joules as per Supplementary requirement **S2** of API Spec. 2H.

iii. Individual plate testing as per **S-3** of API-2H.

iv. Through Thickness (Z direction) tensile testing shall be performed as per Supplementary requirement **S4** of API Spec. 2H.

v. The sulphur content of steel shall be as per clause 5.2 of Supplementary requirement **S 5** of Spec. API 2H.

g. If micro alloying elements Nb, V, Ti are used, their total shall not exceed 0.15 percent.

h. For Thermo-Mechanical Control Processing (TMCP) or equivalent steel please refer Section 1.1.9.5 (ii) hereunder.

i. Pitting Resistance Equivalent Number (PREN) value of stainless steel (1-Arch) shall comply following:

- PREN=Cr +3.3 Mo + 16 N
- Minimum Mo content shall be 2.5%

1.1.9.5 Supply Condition

Material shall comply with the following supply conditions:

i. Steel Grades 2-B and 2-Z shall be supplied in Normalized Condition. Steel **Type** 1-C and 2-C (Rolled Section of flange thickness over 25 mm) shall be supplied in Normalized condition. All other steel may be supplied in as rolled condition.

ii. If the manufacturer/supplier offers an alternative supply condition, e.g. Thermo-Mechanical Control Processing (TMCP) for steel plates (2-B, 2-D & 2-Z) and structural steel shapes (2-C), shall meet the supply conditions as under:

a. Conductor (2-CON) and Pile material shall not be used under this category.

b. Supplementary Requirement of Simulated Post-Weld Heat Treatment (S9) & Pre Production Qualification (S11) applicable to steel Type - 2B, 2C, 2D & 2Z.

c. Supplementary Requirement of S1, S3, S4, S5, Charpy V-Notch toughness test as per clause 1.1.9.4 above.

d. TMCP Steel material having Yield Strength exceeding 345MPa shall not be used for offshore structure and shall not be accepted.

1.1.10 Heat Treatment

Elements subject to press or roll forming where the temperature of the steel is above 38 degree C and less than 427 degree C during forming operation shall be stress relieved by heating the element to a temperature between 590°C and 620°C and cooling after a specified time as per relevant codes & standards.

1.1.11 Quality of finished Steel

The finished steel shall be presented for inspection such that the surface can be readily inspected for defects. All surfaces shall be 100% visually inspected for defects. Repair of plates by welding by Manufacturer or supplier is not permitted.

1.1.12 Material Substitution

Alternative Specifications or property grades for certain material may be accepted with the prior approval of the Company, provided that it can be shown to be equivalent or superior to the specifications as per ASTM & API code listed

in the table 1.1.9.3 and the required properties and appropriate supplements of the materials is complied with the material specified. When the proposed substitute material have variation in chemical and Mechanical properties from the listed codes, the contractor shall establish with reasoning the superiority/equivalent of the alternate material.

1.1.13 Steel Material Inspection

Steel Material shall be physically inspected by Company appointed inspector at Site of Works on arrival of Material with respect to Mill Test Certificate and accepted before put to use.

Mill Test Certificate along with material Traceability record shall be documented as As-Built Documentation/ record.

1.2 Material of Construction of Helideck

Material for Helideck shall be Aluminum unless & otherwise specified in the scope of work in the bid document.

In case provision of main cum helideck considered in the scope of work, material of construction of heli-deck shall be carbon steel.

1.2.1 General

Steel Helideck shall be designed for the designated Helicopter as per the Structural Design Criteria and shall comply with CAP 437 Guideline. Design analysis of helideck shall be carried out as per structural design criteria.

Aluminium Helideck shall be designed for the designated Helicopter as per the Structural Design Criteria and shall comply with CAP 437 Guideline. Helideck Purchase specification shall be generated and supported with detail design of helideck.

The Aluminum helideck beams and plating shall be made of extruded aluminium meeting the requirements of the following specification. The top pan cake aluminium structure shall be supported by the steel primary members of the helideck.

The top aluminium structure shall also cover the safety net, supports for solar panel, Cable tray, lights and drains, threshold gratings at access points, Handrails, isolation sets at all interfaces with carbon steel, access gangways and stairs, Helicopter tie-down and helicopter landing net tensioning points.

Design Calculation & Analysis of Aluminum Helideck shall be certified by third party Certifying agency like DNV/BV. Helideck manufacturer shall obtain this certification, which along with drawing shall be part of Purchase specification.

1.2.2 Material Standards

The equipment shall be designed and tested in accordance with, but not limited to, the requirements of this specification and the latest editions of the following standards, codes, statutory regulations and other documents referenced therein:

BS 8118	Structural use of aluminium – Parts 1 & 2
EN 755 Parts 1-9	Aluminium and aluminium alloys. Extruded rod/bar, tube and profiles.
EN ISO 3506 Parts 1-2	Mechanical properties of corrosion-resistant stainless-steel fasteners.
BS 4592	Specification for metal open bar grating

1.2.3 Material Grades

The materials and grades to be used to the helidecks are tabled below:

PRODUCT	ALLOY
Aluminium Extrusions (structural)	6082 T6
Aluminium Extrusions (planking)	6005A T6
Aluminium Extrusions (other)	6063 T6
Aluminium Sheet	5083 H111
Stainless Steel Fixings	A4 – 80

1.2.3.1 Alternative Grades

Alternative grades may be offered, however their use will be subject to the Company's approval.

1.2.3.2 Stainless Steel Nuts & Bolts of Grade SS316/SS317 shall be used for bolted connections. Aluminum Helideck Bolted connections / Joints shall be sealed with suitable sealant to minimize possibility of Crevice Corrosion.

1.2.3.3 Safety net panels shall be of Aluminum frames with Stainless Steel wire mesh.

1.2.4 Inspection

The aluminium helideck supplied to this specification shall be fully inspected and verified by an approved third party verification organization. The Supplier is required to provide all drawings supported with design calculations, details and descriptions to enable the company to obtain permission to use the helideck. All Mill Test Certificate of Aluminum material, Helideck Manufacturer's QA & QC Records, Design document, Drawings and Material Inspection report shall be document as as-built documentation.

1.2.4.1 Isolation

1.2.4.1.1 Electrical Isolation

Electrical isolation between aluminum and steel structure shall be achieved by providing insulating material (hard neoprene or poly-acetyl made washers, bush & sleeves) to avoid galvanic corrosion.

1.2.4.1.2 Earth Connections

The isolation achieved by clause no.1.2.4.1.1 requires that effective earthing of the aluminium is made through earth bosses. These will be welded to the aluminium support beams local to points of support on the steel substructure.

1.3 CEMENT

1.3.1 Cement Grades

Unless otherwise stated on the bid document, all cement provided for construction shall conform to the following.

Type B Oil well Cement as per API Specs-10A Class-G.

Cement supply to specifications equivalent to those listed above shall be considered as substitution and shall require written approval of the Company to this effect.

1.3.2 When a specific physical or chemical property of the grout or concrete is warranted which is not achievable by controlling the proportions of the normal constituents of the cement grout or concrete, additives to the cement grout or cement concrete may be allowed. The Contractor shall submit to Company his proposal for such additives giving details of the chemical composition of the proposed additives and the specific properties of the cement grout or cement concrete, Contractor proposed to achieve together with test results and other relevant details. The Company shall within a reasonable period review and convey to the Contractor its decision on such proposal. It shall be the Contractor's responsibility to satisfy the Company that his proposal will satisfactorily meet the requirements of the works.

1.3.3 Usage Summary

Usage of different grades of cement shall be as given in Table 3.1.

TABLE - 3.1

	CEMENT GRADE TYPE B*
Grout in Jacket leg to Pile Annulus/ Skirt Sleeves to Pile Annulus /Grout Plug in Piles	Applicable

*Non – shrinking property is essential.

1.3.4 General Requirements

1.3.4.1 Ex-Stock Cement

Cement supplied ex-stock shall not be accepted without proper identification and without manufacturer's Test certificates.

Cement manufactured over six months prior to actual use shall not be used for construction of these works.

In case of any doubt about the quality of cement, the Company may ask for independent testing of the cement to be used on Company's Works by a third party to be selected solely by the Company at the Contractor's cost. Non-compliance of any of these specifications shall be sufficient cause for rejection of the cement and in such case all costs of testing by a third party shall be borne by the Contractor and all such cement be removed from the work site by the Contractor

1.3.4.2 Manufacturer's Test Certificate

1.3.4.2.1 The Contractor shall submit manufacturer's test certificates to the Company for all cements Contractor intends to use for the works. The Contractor shall indicate the manufacturer's name, trade mark or other means of identification, the batch number and date of manufacture and test results covering fineness, chemical composition and compressive strength at 1 day, 3 days and 28 days, initial and final setting time, shrinkage/expansion and soundness. All test shall be carried out as specified in 1.3.4.2.2 below.

1.3.4.2.2 All tests for the cement shall be carried out as specified in ASTM C-109 using 50mm cube specimen.

Shrinkage/expansion test shall be carried out as specified in ASTM designation C-807-87. "Restrained Expansive Cement Mortar" or by similar acceptable method.

1.3.4.2.3 Identification of the cement intended to be used for the works shall be co-relatable with the identification on the manufacturer's test certificate.

1.3.4.3 Special Requirements

The following requirements shall apply unless specifically waived by the Company or otherwise specified herein or on bid drawings.

For all cement used for the works where non-shrinking/expansive property is desired shall have acceptance criteria as below:

Drying Shrinkage - 0.08 % at 28 days (as per ASTM C-596)

Expansion - 0.10% - 0.30% at 28 days.

1.3.4.3.1 The total amount of chlorides calculated as free calcium chloride shall not exceed 0.3 percent by weight of cement.

1.3.4.3.2 Compressive strength for Class-G HSR cement shall not be less than 2.1Mpa (300 psi) in 8 hours at 38°C.

1.3.4.3.3 The grout shall be of non-shrinking expansive type having minimum density 1920 kg/m^3 with compressive strength shall not be less than 70 Kg/cm^2 (approximately 1000 psi, 7 MPa) in 24 hours and 281 Kg/cm^2 (approximately 4000 psi, 27 MPa) in 28 days at 27$\pm$2°C.

1.4 Miscellaneous Steel Items

1.4.1 Fasteners

Unless shown otherwise in the Drawings, all fasteners shall conform to the following:

a) Lag screws and bolts shall be machined with American Standard Regular Hexagonal Heads with American Standard Coarse Threads, Class-2.

b) Nuts shall be American Standard Regular Hexagonal.

c) Washers shall be standard round plate and/or machine lock unless shown otherwise on the drawings.

d) All bolts for use in the submerged and splash zones and upto & including jacket walkway level shall be flouro-polymer coated (XYLAN type) or equivalent as specified in table -1.4.1.1. Coating color for all bolts and nuts shall be "Red". All nuts & bolts shall be of ASTM A-193 Grade B7 and nuts of ASTM A-194, grade 2H.

e) All bolts, nuts and washers above splash zone and fixed to external surfaces and internal surfaces exposed to natural ventilation, shall be of stainless steel ASTM A-193 Grade B8M and nuts of ASTM A-194, grade 8M.

Table-1.4.1.1: Specification for PTFE/ Xylan Coating on nut & bolts

Technical requirement of PTFE/Xylan Coating on nut & bolts		
Sr. no.	Properties	Test Requirement
i	Corrosion resistance	salt spray test up to 3000 hours (nuts not frozen) (ASTM B117)
ii	Adhesion	5B (ASTM D3359)
iii	Pencil Hardness	5H-6H (ASTM D3363)
iv	Kinetic friction coefficient	0.06-0.08
v	Elongation	35%-50%
vi	Tensile strength	27.6 Mpa (4000 psi)
vii	Operating pressure	upto 690Mpa (100,000 psi)
viii	Coating Thickness	25 µm to 40µm
ix	Impact	18.43 Nm (160 in.lb) (ASTM D2794)
x	Thread fit	Over tapping of nuts 0.25mm (0.010")
xi	Dielectric strength	500 volts per 25 µm
xii	Operating temperature	-100°C to +260°C

Note: PTFE /Xylan coating on fasteners will have a uniform thickness of 20 ± 5 Microns to 45± 5 microns thick.

In atmospheric zone for structural purposes the hardness and strength class shall not exceed to ISO 898 (all parts) class 10.9.

In submerged zone Low alloy steel fasteners used for structural purposes the hardness and strength class shall not exceed to ISO 898 (all parts) class 8.8 & shall be coarse threaded and Class 8.0 for nuts.

Bolts & Nuts shall be procured along the Mill Test Certificate containing Product Analysis for Chemical Composition, Mechanical Tests, etc. Ladle Analysis shall also be reported with Steel manufacturing process. Manufacturer shall inspect all Bolts & Nuts for surface cracks and certify that supplied bolts & nuts are free from defects. Test Certificate for PTFE Coating shall be provided. On arrival of Bolt at site, all Bolts & nuts shall be inspected by Company appointed Inspector with respect to Mill Test Certificates.

1.4.2 Grating (Electro forged grating):

1.4.2.1 i) Grating from Cellar Deck and above

Material

Serrated flats for gratings shall conform to ASTM A-36 or IS 2062, E250 Quality – B. Cross bars shall be high strength deformed bars conforming to IS 1786 Gr. Fe 415.

Welding of grating shall be electro-forged weld.

For gratings being fabricated by resistance welding/ electro forged welding, bearing member shall be minimum 30 mm X 6mm serrated type spaced at 30 mm center to center also. Square twisted Steel cross bar having minimum 8mm (diagonal), spaced at 75 mm center to center. Crossed bars over bearing bar shall be fully pressed into the bearing bars, flush and cross bar projection should be less than 1.5 mm. All bearing bar to frame bars shall be completely seal welded. Each bearing member shall be serrated by punching out of plain bar tops in order to provide cut edges for increased grip. The serration depth shall not be less than 2.5 mm.

The spacing of serration shall 12.5mm. The gratings shall be manufactured in accordance with BS-4592 requirements.

Grating for Treads for staircase shall also be electro- forged grating.

End fixing plate shall be provided & seal welded along the two supported ends (perpendicular to bearing plates) of treads of staircase.

All grating panels and treads of staircase shall be seal/fillet welded all around/on both the sides with the structural members.

6mm thick chequered plate Nosing shall be provided in the grating for treads of staircase.

Gratings shall be galvanized as per Functional specification no. 2005 “Protective Coating”.

ii) Grating Below Cellar Deck
Material

Material for grating shall be of stainless steel. Serrated flats for gratings shall conform to ASTM A-484-13a Grade SS 316L. Cross bars for gratings shall conform to ASTM A276 GRADE 316L.

Welding of grating shall be Resistance weld.

For gratings being fabricated by resistance welding/ electro forged welding, bearing member shall be minimum 30 mm X 5 mm serrated type spreader at 30 mm center to center also. Square stainless Steel cross bar having minimum 8mm (diagonal), spaced at 75 mm center to center. Crossed bars over bearing bar shall be fully pressed into the bearing bars, flush and cross bar projection should be less than 1.5 mm. All bearing bar to frame bars shall be completely seal welded. Each bearing member shall be serrated by punching out of plain bar tops in order to provide cut edges for increased grip. The serration depth shall not be less than 2.5 mm. The spacing of serration shall not be less than 12.5 mm. The gratings shall be manufactured in accordance with BS-4592 requirements.

Material for grating shall be as per Table 1.1.9.3 of this spec.

End fixing plate shall be provided & seal welded along two sides (perpendicular to bearing plates) of treads of staircase.

All grating panels and treads of staircase shall be seal/fillet welded all around/on both the sides with the structural members.

Nosing shall be provided in the grating for treads of staircase. Grating for Treads for staircase shall be electro- forged grating.

Details of gratings indicated as per 1.3.2.1(i) & (ii) above are suitable for Span of Grating upto 750mm. An intermediate support shall be provided where the span of grating exceeds 750mm.

Sr. No.	Components of grating	Gratings	
		Grating from Cellar Deck and above	Grating Below Cellar Deck
1	Material Bearing bar	ASTM A-36 or IS 2062, E250 Quality – B	ASTM A-484-13a Grade SS 316L
2	Material for cross bar	IS 1786 Gr. Fe 415.	ASTM A276
3	Bearing Bar Dimension	30x 6mm	30x5mm
4	Cross bar geometry and dimension	Square twisted having minimum 8mm (diagonals)	Square twisted having minimum 8mm (diagonals)
5	Depth of of serrations	Minimum 2.5 mm	Minimum 2.5 mm
6	Spacing of cross bar	75mm centre to centre	75mm centre to centre
7	Maximum span of grating	750mm	750mm

Note: For platform makeover and maintenance painting related works, respective project scope of work shall be referred.

1.4.3 Hand Rail & ladders

1.4.3.1 Hand Rail below Cellar Deck (Type – I)

Stainless Steel Hand rail & ladders shall be provided on all peripheries of platform from Boat landing to Cellar deck (bottom). It shall cover sides of Jacket Walkway, Stair sides, Stair landing, Sub-Cellar Deck sides, Boat Landing and Stair to Boat Landing.

Hand rails shall have continuous weld all round joints. Removable type Or Offshore installed Hand rails shall be test fitted at yard prior to load out and shipped loose duly marked for offshore installation. Hand rail post interval shall not exceed 1.5 m (horizontal distance). Height of hand rail shall be 1.1 m. Handrail Type-I shall be designed to withstand extreme wave load. Wave slam check shall be carried out for Hand rails.

1.4.3.2 Hand Rail on and above Cellar Deck (Type – II, III & IV)

Hand rail shall be provided on all peripheries of platforms, Cellar & Main deck, modules, roofs, Lay down areas, landings & stair landings, stair sides, sides of walkway, access platforms sides, Solar Deck, etc. Hand Rail for Laydown Area shall be removable / re-fixable type.

Hand Rail shall be designed for 100 kg load applied at any point in horizontal & vertical & direction on top Rail & at handrail post. Hand rail post interval shall not exceed 1.5 m (horizontal distance) and height of hand rail shall be 1.1 m below the top rail. Two intermediate rails shall be provided in the handrail. Kick Plate/toe late shall be provided at the bottom level of Handrail with a gap of 10mm between floor plate and grating. Clear distance between two Handrail posts shall be 50mm.

Steel Handrail and kick plate shall be galvanised and over coated as per spec.2005.

Drain hole shall be provided at the bottom of collar of removable type Handrail for drainage of water

Following types of Hand rails shall be used:

TYPE – I - Hand rail below Cellar Deck (Wave Zone) - Fixed Type.
TYPE – II - Hand rail on and above Cellar Deck - Fixed Type.
TYPE – III - Hand rail on and above Cellar Deck - Removable Type.
TYPE – IV- HR with safety chain

1.4.3.3 TABLE : Details of Handrails & Chains

Member	Dimensions in mm	Material Spec.
Vertical post for Type–I, II, III and IV	60.33Ø x 5.54	For Type-I: Conforming to STAINLESS STEEL : ASTM A 312 GRADE 316L For Type-II,III and IV: Conforming to ASTM A53 Grade-B Type-S/API-5L Grade B/ ASTM-A-106 Grade B
Top horizontal member for Type–I, II and III		
Other Horizontal Members for Type–I, II and III	48.3Ø x 5.08	
Kick plate for Type–I, II and III	100 x 6	For Type-I: Conforming to STAINLESS STEEL : ASTM A 240 GRADE 316L For Type-II and III: Conforming to ASTM A36/ IS 2062: E250 Quality-B
Socket, Collar for Type III only	73.00 Ø x 5.16	Conforming to ASTM A53 Grade B Type-S/API-5L Grade B /IS 1161 / IS 1239/ ASTM-A-106 Grade B
Safety Chain for Type - IV handrail only	6 mm DIA.	Stainless steel 316L

.

Note -1: The size of vertical post & top horizontal rail is minimum and indicative only. Size of vertical post & top horizontal rail shall be calculated & provided as per design calculations considering environmental and live loads during detailed engineering.
Note-2: For platform makeover and maintenance painting related works, respective project scope of work shall be referred.

1.5 TIMBER

1.5.1 Usage

The specification for timber as per IS 883 shall govern the application of timber used in:

a) Launch Truss runners of jackets.
b) Mud mats

Timber to be used for each of the above application shall meet the strength, durability and dimensional requirements for the intended use. Contractor to indicate the grades of timber along with their properties and satisfy Company on their suitability for the proposed use.

1.5.2 Delivery & Storage

All timbers supplied for the works shall be delivered at the fabrication site in sizes and lengths as required for the works and fully seasoned and treated with preservatives.

After delivery and prior to use all structural timbers shall be stored in such a manner as to prevent decay and renewed development of defects. Preferably timbers shall be piled into stacks upon well treated and even surfaced beams, sleepers or brick pillars so as to be above ground level by at least 15 cm. The stacks shall be protected from hot dry winds or direct sun and rain and shall be accessible from all sides.

The stacks of timbers shall be appropriately marked so as to be readily identifiable and co-relatable with the purchase order, vendor's certificate or other inspection/test certificates.

1.5.3 Inspection & Testing

Inspection and testing of timber shall be carried out as per the grades of timber supplied as per the IS 883 requirement.

1.6 RUBBER

1.6.1 SCOPE

Rubber products /Neoprene shall conform the Requirements of ASTM D 2000.Rubber material for fenders shall conform to the Requirements indicated in Table- 1.5.1.1 & Table -1.5.1.2.

This specification describes the minimum requirements for procurement, manufacture, testing and supply of rubber products for use on offshore platforms as required either as permanent component or as temporary installation and as listed below:

1. Boat Landing - Shear Fenders
   - Rub Strips
2. *Barge Bumper - Shock Cell with Rotating Bumper Rings (See Note-1 Below)
3. Jacket Leg - Rub strips
4. Jacket Leg/Skirt Sleeves - Diaphragm Closures
5. Jacket Leg/Skirt Sleeves - Grout Seal/Packer
6. Piles - Pile Closure

***Note-1:** A chain as per API 2F with corrosion allowance of 6mm shall be provided connecting jacket legs and shock cell to prevent the pull out of the shock cell. Size of chain and fixing arrangement shall be firmed up during detailed engineering.

Table 1.6.1.1: Requirement of rubber material (Molded Fenders)

Sr. no.	Property	Testing Standard	Condition	Requirement
1	Tensile	ASTM D412 Die C	Original	16.0 MPa (min.)
			Aged at 96 hours At 70º C	12.8 MPa (min.)
2	Elongation at Break	ASTM D412 Die C	Original	350%
			Aged at 96 hours At 70º C	280%
3	Hardness	ASTM D2240	Original	78ºShore A (Max.)
			Aged at 96 hours At 70º C	Original +8º Shore A (Max.)
4	Compression set	ASTM D395 Method B	22 hours at 70º C	30 %(Max.)
5	Tear Resistance	ASTM D624 Die B	Original	70 kN/mm (Min.)
6	Ozone resistance	ASTM D1149	50 pphm at 20% stain, 40º C, 100 hours	No cracks
7	Sea water Resistanc	ASTM D471	28days @ 95º C	Hardness±10% Shore A (Max.) Volume +10/-5% (max.)
8	Abrasion loss	BS 903 A9 Method B	3000 Revolution	1.5 cc (max.)
9	Bond strength	ASTM D395 Method B	Rubber to steel	7 N/mm (Min.)

10	Dynamic Fatigue	Method D430-95 Method B	15000 cycles	Grade 0-2

Table 1.6.1.2: Requirement of rubber material (Extruded & Wrapped Fenders)

Sr. no.	Property	Testing Standard	Condition	Requirement
1	Tensile	ASTM D412 Die	Original	13.0 MPa (min.)
			Aged at 96 hours at 70º C	10.4 MPa (min.)
2	Elongation at Break	ASTM D412 Die	Original	280%
			Aged at 96 hours at 70º C	224%
3	Hardness	ASTM D2240	Original	78ºShore A (Max.)
			Aged at 96 hours at 70º C	Original +8º Shore A (Max.)
4	Compression set	ASTM D395 Method B	22 hours @70º C	30 %(Max.)
5	Tear Resistance	ASTM D624 Die B	Original	60kN/mm (Min.)
6	Ozone resistance	ASTM D1149	50 pphm at 20% stain, 40º C,100 hours	No cracks
7	Sea water Resistance	ASTM D471	28days @95º C	Hardness ±10% Shore A (Max Volume +10/-5% (max.)
8	Abrasion loss	BS 903 A9 Method B	3000 Revolution	1.5 cc (max.)

1.6.2 SITE CONDITIONS

Rubber compounds for the rubber products shall be able to withstand the extreme marine environment indicated in the bid document.

1.6.3 GENERAL REQUIREMENTS

Company requires that the offered products have had satisfactory past performance in offshore environments. For each product, a base specification/product trademark is furnished in the Technical requirement to evaluate the level of performance required. In case the Contractor wishes to propose an equivalent alternative product, approval for the same shall be obtained by him in writing from the Company after furnishing complete technical details and proven application record of the alternative offered, viz. technical properties, manufacturing process, exposure to marine environments, successful offshore use etc. The products so offered shall be supplied only from manufacturers with a proven track record of supplying identical or similar products. Only products and grades normally manufactured and listed in the manufacturers catalogues shall be supplied.

1.6.4 TECHNICAL REQUIREMENTS

This section details the various rubber products listed above along with their minimum general requirements. Specific requirements along with base

specification/product trade mark for each product as given in Annexure-1. If Contractor proposes an alternate system design for any component, the specific requirements shall be suitably configured to meet the design criteria for that components.

1.6.4.1 BOAT LANDING SYSTEM

The boat landing system is planned in such a way that it meets the requirements of the Design Criteria. The boat landing is designed to be mounted on shear fenders to absorb energy of impact. A set of low friction pads/strips are provided to act as rubbing surface against the boat.

1.6.4.1.1 SHEAR FENDERS

The shear fender shall have solid rubber bonded between two parallel plates. The plates shall be bolted to the boat landing at one end and supporting member at the other end.

Testing shall be performed to 110 percent of design capacity and load deformation - energy relationship reported.

1.6.4.1.2 BOAT LANDING RUBSTRIPS

The rub strips for boat landing shall be low friction type polyurethane minimum 150 mm width and 50 mm thickness bonded to back up plate/channel as shown in the relevant drawings.

1.6.4.2 BARGE BUMPER

Boat landing cum barge bumper system mounted on a combination of shock cells and shear fenders shall be can be provided. Individual stand-alone barge bumpers may also to be provided to protect the jacket legs. The specification covers both the instances. Stand-alone barge bumper shall be fitted with Gr.3 stud-less chain of suitable dia. 42mm (min.) of sufficient length with shackle at one end attached to Jacket leg and adjustable D shackle (galvanized) at opposite end to carry the static loads.

1.6.4.2.1 Shock Cells

The shock cells shall consist of two concentrically placed steel tubes with a rubber annulus. The rubber material used in the shock cell shall be natural rubber based. Manufacturing process of shock cells shall be such that the rubber is slightly under a compressive strain rather than a tensile strain in the finished cell assembly at zero loading. The process of pouring and moulding the rubber in the annulus are not acceptable due to problem associated with shrinkage and cracking.

Steel Tubulars used for shock cells shall be designed for environmental loads and material of tubular shall conform to 2-D of table 1.1.9.3 of this specification.

The shock cells shall have a minimum overload capacity of 10% of the rated energy. Each shock cell shall be individually tested for both axial and lateral loading at least up to 110% of rated energy, and load-deformation-energy curves shall be developed for each.

Following information shall be supplied by the shock cell vendor with his quotation.

i. The load/deformation/energy relationship of the shock cell.
ii. The type and quality of rubber
iii. The manufacturing process of the shock cell

1.6.4.2.2 Rotating Bumper Rings

The function of the Rotating Rubber Rings is to transfer the lateral load to the shock cell absorbing part of the energy of impact. The rubber ring shall have a urethane facing. The rubber ring should be capable of rotating freely around the vertical pipe.

Testing shall be performed to 110% of the rated energy. The load deformation/energy characteristics of the Bumper Ring shall be obtained by testing the ring with an outer steel sleeve to simulate the actual conditions.

1.6.4.3 PLATFORM RUBSTRIPS

Platform substructure protective rub strips and rub strips on boat landing shall be an easily replaceable type so that if required, only damaged rubstrip need be replaced. They shall be manufactured by the extrusion process. There shall be no cracks or breaks in the body of the fenders. Necessary chambers must be provided to clear-up back ring.

Testing shall be performed to 110% of rated load and load-deformation energy relation reported.

1.6.4.4 DIAPHRAGM CLOSURES (INSTALLATION AID)

Diaphragm closures, where required by Contractor as part of his installation engineering, shall be made of reinforced rubber and shall be tested to a pressure equal to 1.5 times hydrostatic pressure due to Water Depth plus 10M of seawater. In case the diaphragm is required to rest on / penetrate a sandy layer, the test pressure shall be 1.5 times (hydrostatic pressure due to Water Depth + Ultimate bearing capacity of Soil).

1.6.4.5 GROUT SEAL/PACKER (INSTALLATION AID)

The grout seal packer shall be used to seal the annulus between the pile and Jacket leg (having Main Pile) / skirt pile sleeve during grouting operations. One of the following two types of seals/closures shall be used.

I. PASSIVE GROUT SEAL

It provides a seal with a loop under hoop tension, gripping the pile during driving/grouting.

II. INFLATABLE PACKER ASSEMBLY

It provides a seal by pneumatic/hydraulic inflation of a rubber torus. The inflatable packer shall be tested to a pressure of 40 bar against a pile mandrel.

1.6.4.6 PILE CLOSURE PLATE (INSTALLATION AID)

The Pile Closure shall be provided if required by Contractor as part of his installation engineering. This closure shall be of easily removable type and shall not leave any protrusion of more than 25 mm after removal of the closure. This closure shall be tested to a pressure of 1.5 times the hydrostatic pressure at seabed computed at the installation site.

1.6.5 DRAWINGS

i. Contractor shall furnish drawings giving complete details and dimensions of the items for approval of Company at least 30 days prior to preparation of test piece, if so required. Drawing shall also include MTO along with various grade of material required for fabrication.

ii. Approval of drawings shall not relieve the Contractor of his responsibility to provide the products in accordance with this specification.

1.6.6 QUALITY CONTROL

Contractor shall take every precaution to ensure and demonstrate, if required, adequate quality control of their products so as to provide products of uniform and required quality.

1.6.7 TESTING AND INSPECTION

1.6.7.1 Testing

Testing shall be carried out on each item being supplied, for all the parameters specified in the technical requirements, and test reports shall be furnished to the

Company. Company reserves the right of witnessing all tests and declining acceptance, if necessary, because of poor standards of manufacture and/or deficiency in meeting the technical particulars. The Contractor shall notify the Company 30 days in advance to enable Company or his authorized representative to witness the testing, if so required. The results shall be furnished to Company and approval obtained prior to shipment of the products.

In case of any doubt, the Company may ask for additional information, testing or retesting which the Company may feel necessary, which the Contractor shall carry out at no extra cost to Company and with no impact on the delivery project schedule.

1.6.7.2 INSPECTION

All items intended to be installed in the works shall be subject to inspection by Company's inspectors. Contractor shall extend all facilities to the Company's inspector for such inspection at all reasonable times. Non-conformance to these specifications in the opinion of Company's Inspectors or as evident from the results of any additional tests or retesting shall be sufficient cause for rejection.

1.6.7.3 MANUFACTURER'S CERTIFICATE

The Contractor shall submit to Company, Certificate by the manufacturer for each type of product giving the following details.

a. Manufacturer's Name, Trade Mark or other means of identification.
b. Type and quantity of Rubber Products supplied.
c. Linear dimensions of each product noting deviations from the nominal dimensions.
d. Quality of rubber/Line call out no. used with test results for requirements outlined in ASTM D-2000.
e. Method of manufacture
f. Certified performance characteristic.

1.6.8 WARRANTY

Contractor shall have final and total responsibility for the satisfactory performance of all products to be supplied under this specification. Contractor shall warrant the equipment furnished by him and the performance of the said product in accordance with this specification and Spec. No. 1050, "General Specification Definition".

1.6.9 SPECIFIC REQUIREMENT

The specific requirements of the various rubber products for the system design given in the bid package along with Base Specification / Product trademarks are given below:-

1.6.9.1 Table: specific requirements of the rubber products

Sr. No.	Product	Minimum Design Load Carrying Capacity. (MT)	Minimum Energy Absorption (T.M)	Base Specification & Remarks
1	Shear Products.	50.0	12.5	Bridge Stone SC 500H, Grade Ro.
2	Boat Landing Rubstrips	-	-	EPI Boat Landing Rubstrip.
3	**Shock Cells**			
	Case A: Barge Bumper designed as an individual unit.			Regal SC 2036. (508X904 Ø mm)
	1. Axial	150	20	Minimum Capacity.
		100	12.5	Intermediate Capacity.
	2. Lateral	-	8.0	
	Case B: Barge Bumper designed as an integrated system.			Regal SC 1830. (457X762Ø mm)
	1. Axial	150.0	16.0	Minimum Capacity.
		100.0	9.0	Intermediate Capacity.
	2. Lateral	-	5.5	
4	Rotating Bumper Rings	136.0	4.2	Regal RBR 1931.20
5	Jacket Leg Rubstrips.	22.4 T/M	2.3 T.M/M	Bridge Stone SA 300H Grade R2.

1.7 Building Material and building products

1.7.1 Scope

The intent of this specification is to establish the minimum Requirement for operationally complete building to be provided on offshore well platform. Architectural component and equipment for the building module shall be as per Norsok C-002. The contractor adhere to this specification

1.7.2 GENERAL

1.7.2.1 GENERAL REQUIREMENTS.

1.7.2.1.1 Contractor shall fabricate a building on the platform to facilitate Switchgear Room, Telemetry Room, Battery Room & Generator Room and other necessary room as specified in the scope of work. Contractor is responsible for complete design including all structural framing.

1.7.2.1.2 Equipment, as specified elsewhere in bid package, shall be supplied and installed in the rooms of the building.

1.7.2.1.3 Contractor shall furnish other facilities and equipment, both inside and outside the building as required in these specifications.

1.7.2.1.4 All material, equipment, tools or supplies to be incorporated permanently into the building shall be new, sound, free from all defects and confirm to the size and /or capacity and quality specified. Contractor shall, when required, furnish satisfactory evidence as to the type and quality of materials, equipment, tools and supplies.

1.7.2.1.5 Contractor shall notify Company Representative of any aspect of this specification, which in the judgment of the Contractor should be changed to improve the buildings. However, the incorporation of these changes into this specification is subject to Company's approval.

1.7.2.2 BUILDING REQUIREMENT

The intent of this specification is to establish the minimum requirements for operationally complete building to be provided on Offshore Well Platform. Architectural components and Equipment for The items listed outline the general requirement for various buildings:

1.7.2.2.1 The building shall be suitable for occupancy and general usage in a marine environment and suitable for environmental condition as indicated in the bid.

1.7.2.2.2 The building shall be planned and design by Contractor with suitable wall, partition, interior partitions, interior and exterior doors with frames and windows etc.

1.7.2.2.3 The building shall have framed openings in walls and roof for equipment, piping, cables exhaust etc. as required.

1.7.2.2.4 The buildings shall be completely wired for lighting receptacles, switches and equipment.

1.7.2.2.5 Piping and electrical connections shall be arranged such that field connections are minimized.

1.7.2.2.6 The building shall be furnished completely operational prior to load-out.

1.7.2.2.7 The area classification outside/inside the building shall be as per relevant specifications.

1.7.3 STRUCTURAL SPECIFICATIONS

1.7.3.1 MATERIAL

Structural Steel shall be as per specification stated in table no. 1.1.9.3 of this specification.

1.7.3.2 DESIGN

The building shall be designed in accordance with Section.3.4, Structural Design Criteria.

1.7.3.3 FABRICATION

Fabrication of the Structure shall be in accordance with clause no 2.0 of this specification.

1.7.3.4 COATING SYSTEM

All exposed structural steel shall be coated in accordance with General Specification No. 2005, Protective Coatings. The Contractor shall keep adequate paint material for field touch-up after installation.

1.7.4 ARCHITECTURAL SPECIFICATIONS (APPLICABLE FOR UNMANNED PLATFORM ONLY)

All Architectural items for unmanned platform shall be as per Functional Specification for Building Module Spec. 6011F of the bid document.

2. FABRICATION

2.1 SCOPE

These specifications provides for functional specification of fabrication of structures including few specific requirements/ guidelines.

2.2 GENERAL

The fabrication of platform including fit-up, welding, assembly, QA/QC pre-commissioning etc .shall be carried out as per provisions of API RP 2A, AWS D1.1 and AISC (American Institute of Steel Construction).

Contractor to furnish a detailed procedure for fabrication and assembly of structure for Company's review which shall include following as a minimum.

1. Material shall be physically Inspected by company appointed Inspector and accepted prior to start of fabrication.

2. Steel Plates, Sections, pipes shall be transferred with heat numbers / cast number / bloom number / product number along with traceability mechanism. Traceability shall be physically inspected by company appointed Inspector.
3. Procedure for fabrication and assembly.
4. Procedure for fit-up and welding.
5. Procedure for dimension control.
6. Procedure for inspection and testing
7. QA/QC plan.
8. Procedure for Pre-commissioning.
9. Procedure for post installation checks.
10. Health Safety & Environment Manual.
11. Procedure for Painting and galvanization
12. Procedure for Post weld heat treatment
13. Procedure for Defect repair and Distortion control
14. Procedure for material traceability
15. Procedure for material receipt, Inspection and storage.
16. Weighing procedure

2.3 SPECIFIC REQUIREMENT

Following specific requirement shall be complied with:

2.3.1 Manufacture of tubular for structural members

Tubular of diameter greater than 406 mm shall be rolled, welded & fabricated from plates in accordance with **API Spec. 2B & API Spec. 5L**.

The tubular shall be rolled in an **API** approved mill and shall carry the **API** monogram.

The tubular shall be longitudinal seam welded by electric submerged arc process. Electric resistance welded or spiral welded pipes will not be accepted. Pipes shall have only one longitudinal seam weld. The welding and weld inspection shall be as per the Specification No.2009 and relevant Codes and Standards.

The tubular shall meet the requirements of **API Spec. 2B** with the following exceptions:

a. The wall thickness and weight tolerances for tubular members shall be governed by the requirements of the code under which the plates are rolled.

b. For girth joints with offsets greater than 1.5 mm, the following shall apply:

i. When cans are of different thickness the higher thickness shall be ground smooth or machined to provide a 4: 1 taper transition.

ii. When cans are of same thickness, the offset shall be tapered to a slope of 4: 1 by deposit of additional weld metal and ground smooth.

In no case shall the metal thickness be less than the nominal thickness of the thinner can. Maximum offset permissible shall be governed by Clause 3.7 of the **API Spec. 2B**.

Note: API Spec 5L / API Spec 2B Tubular shall be rolled & manufactured under API license and shall carry the API monogram on the product. Mill Test Certificate of the Plate Material (Ladle & Product) shall be obtained and submitted along with pipe rolling Mill Test Certificate for inspection.

2.3.2 Galvanizing.

Following structural shall be galvanized as per General Specification No. 2005 “Protective coating”.

Gratings.
Handrails.
Stair Treads, Ladders and ladder cages.
Helideck Safety Net System (For Steel Helideck)
Piping spools
Equipment supports
Miscellaneous hardware.

Galvanizing shall be done after completion of all cutting, drilling and punching operations and after welding but before final assembly in place.

Painting: All painting shall be done as per General Specification No. 2005 “Protective coating”.

Contractor shall mark levels suitably with paints to facilitate assessment of levels during and after upending and placement of sub-structure at location. Jacket and Pile shall be foot marked at 120º apart which should cover at least half the circumference. This is to facilitate the checking during the upending of the Jacket and pile driving. All under water clamps shall be painted with white paint.

2.3.3 Marking of low-fatigue joint (If Applicable)

Marking of low fatigue life joints for future inspection shall be carried out as described in Design Criteria Structural. The marking panel of neoprene based cupronickel embedded sheets shall be at least 400 mm wide and shall have a length corresponding to number of letters in the marking. Each letter shall be located in the space of 200 mm x 200 mm size with a letter width of 40 mm. Lettering shall be with a medium suitable to withstand marine environment. A border of 100 mm shall be provided all round the lettering. Marking shall be provided in the form of a strip.

2.3.4 Repair and remedial measures

Repair of defects and acceptability shall be as per **API RP-2A**. Welding repair, if any, shall be performed only after approval of the Company.

2.3.5 Connections

2.3.5.1 Welded Connections

All structural welds shall be full penetration welds unless otherwise specifically shown in the drawing. Partial penetration welds are not permitted.

2.3.5.2 Bolted Connections

As a general rule bolted connections shall not be used unless specifically indicated. Use of bolted connections for temporary works may be permitted by the Company's representative at site at his sole discretion. Contractor shall submit detail procedure for bolting for approval of Company.

All bolted connection shall be provided with protective caps with inhibited grease & sealed with suitable sealant to minimize possibility of crevice corrosion.

2.3.6 Splices

a. Tubular member of the same diameter and wall thickness may be spliced by girth butt weld, as per provisions of API Spec. 2B with the following additions:

   All joint cans length up to 3 M shall be rolled in one section. Joint cans with a length greater than 3 m must be made-up of sections limited to 1.5 m minimum length. In no case shall the girth weld/fall within 75 mm on either side of crown and saddle point.

b. Beam splices shall be as per API RP 2A with the following additions:

   Splices for deck beams must be staggered i.e. the splices in any two adjacent beams shall not lie in a line perpendicular to the beam axis.

c. Joints in bar gratings and deck plate in the span direction shall occur only at points of structural support. All plating & end plates of gratings shall be continuously seal welded to supporting members.

d. Deck plating shall be welded in place using a low heat, short arc welding process. This requirement is to minimize potential warping of the deck plates and to obtain optimum levelness of the deck surface. Other low heat, time saving or automatic welding procedure may be considered but must be qualified.

2.3.7 Stress relieving.

1. Welded assemblies, where the thickness of one of the elements exceeds 65 mm, or where the thickness of weld exceeds 50 mm shall be stress relieved after assembly.

2. Any other element/assembly specifically noted in the drawings shall be stress relieved.

All stress relief shall be achieved by thermal methods by heating the element or assembly to a temperature between 590°C and 620°C. The use of furnaces is desirable for all stress relief operations. A detailed procedure shall be developed and Company's approval obtained prior to performing the operations.

2.3.8 Fabrication tolerances

Fabrication tolerances shall be as per API-RP-2A, AWS D.1, AISC, API 5L and API 2B wherever applicable. Fabrication tolerances for structural shapes fabricated from plates shall conform to the requirements of ASTM A6

Contractor shall use his best efforts to provide a flat deck surface. All high or low spots that result during the installation of deck plating/grating and after installing skids and equipment shall be eliminated to reduce water holding valleys to a maximum of 3 mm.

2.3.9 Inspection And Testing For Structural Fabrication

a. The Company shall inspect fabrication and assembly of structures stage wise and after final completion.

b. The Company shall have the right to inspect the materials, fabrication and erection of all items concerned with the works without limitation.

c. The Company shall have free access at all times to any part of Contractor's yard that concerns the work. When in the Company judgment, any working area or section should be inspected, the Contractor must thoroughly clean it of all excess and waste materials such as sand , slag, welding rods etc, and allow adequate time for proper inspection .

d. The Company shall be informed at least ten days prior to starting of any work by Contractor or any sub-Contractor such as assembling or fabrication of any section, grit blasting, painting etc. The Company shall be informed before any repairs are made to the welds when defects are found and not after same defects have been rectified. Whenever any piece is to be assembled that will prevent inspection of the area,

Company shall be informed, the area inspected and any defects rectified before proceeding with the assembly.

e. The Company shall have the right to inspect at any time tools or equipments to be used in any part of the work and shall have the right to condemn any equipment or work which do not conform to the specification or the drawings. Defective work or work not conforming to the specifications or the drawing shall be re-done by the Contractor at his cost.

f. Company shall approve all phases of the testing including leak repair or defects and replacement of materials and equipments found to be defective during testing and shall sign all Test Certificates, if testing is witnessed by the Company.

g. The Company shall have the right to request any additional inspection to ensure that the Work conforms to the specifications, at no extra cot to the Company.

h. The Contractor shall furnish, install and maintain in a safe operating condition all scaffolding, ladders, walk ways, adequate lighting etc. necessary for safe and thorough inspection by Company. The safety and condition of above scaffolding, ladders, lighting etc. must conform to OSHA & local industrial safety codes for such operations.

i. The Contractor must ensure that all valves and removable plugs on jacket legs are closed prior to load out and shall give written certification for the same.

j. After the fabrication is completed, the jacket legs and skirt sleeves, pre-installed conductors and pile sections, launch truss chords and buoyancy tank, if any, shall be pressure tested for leaks through top and bottom closures. The applied pressure shall be 1.5 Kg/cm^2 minimum/as recommended by MWS/Installation Contractor and maintained for four hours. A soap test shall be conducted to detect any leakage between the rubber diaphragm and the flange and top closure plates and welds or any other joints. A nominal positive pressure shall be left in the jacket and skirt sleeve to ensure no leak condition before launching. All inflatable packers shall be pressure tested again at the yard to the test pressure specified.

The manufacturer's test certificate shall be furnished to the Company.

k. All grout and air lines for the jacket grouting system shall be cleaned by blowing clean air to ensure their operability. These shall be pressure tested at 40 Kg/cm^2 for one hour. The protective housing at the bottom of

jacket for the inflate lines shall also be pressure tested to the above pressure.

2.3.10 Pre-commissioning checks

After the fabrication yard erection and hook-up has been completed, the Contractor shall start the pre-commissioning checks. It may not be possible to complete all the pre-commissioning checks in the fabrication yard. A detailed list of pre-commissioning checks required to be performed by the Contractor are specified in the bid documents. However, the Company desires that at least the following pre-commissioning checks/tests shall be completed in the fabrication yard.

Contractor to note that installation check as called out in the following list shall include the following

1. Name - plates and/ or certificates of equipment are correct and visible. Name plate of equipment shall be seal welded with the equipment.
2. Equipments are properly installed in accordance with drawings and foundations are proper.
3. All necessary supports are attached and are in acceptable condition.
4. All connections of equipment to piping, tubing and wiring, are made in accordance with drawings and specifications.
5. All low fatigue joints are properly marked. (If applicable).
6. List of out of tolerance reports.
7. All gratings & handrails and ladders, equipment supports, piping spools are welded and fixed to structural members as per drawing.
8. All welded joints are painted as per spec .2005
9. Stopper at the end of monorails
10. Safety net 1.5 m width all around helideck / 1.0 m width perimeter walkway below helideck
11. Providing chain connecting shock cell and jacket legs and shall be tight.
12. Lifting equipment (Cranes, Hoists etc.)
    1. Installation check.
    2. Loads tests.
    3. Function check of alarm points in the control cab.
13. Decks, Building and Accessories.
    1. Installation check.
    2. Water flood check of flooring/Floor Drains and roof slope & drainage arrangement against leaks and stagnation.
    3. Adequate Floor drains are installed with removable type 3mm thick stainless steel removable sediment bucket with handle as per ASME A112.6.3 to prevent stagnation of water on the floor.

2.3.11 Weighing of decks/modules and other top sides facilities.

.
The Contractor, prior to load out, shall accurately weight all Deck structures, topside modules & buildings, and other topsides facilities etc. Contractor shall include in his proposal the basic details of the weighing procedure and equipments intended to be used. Detailed weighing procedures shall be developed and submitted for Company's approval upon award of Contract. Load cells used shall have valid calibration Certificates.

While weighing it shall be noted that the point of application of the load cells shall be in such a manner that based on the results of the weighing it shall be possible to devise the reactions at each support point as well as the center of gravity of the component being weighed.

Contractor shall prepare a procedure for final weighing report for every lift containing.

i. Weighing Results.
ii. Theoretical Prediction.
iii. Item schedule for all items which are yet to be installed prior to lifting, together with any items, which are to be removed i.e. rigging platform etc.

Contractor shall assume full responsibility for all remedial measures required as a result of weight escalation beyond the weights budgeted for sea-transport, offshore lifting and final service operations. This responsibility shall include but not be limited to revision of the marine spread, strengthening and stiffening of the structures, off loading components in that lift etc.

3. INSTALLATION

3.1 SCOPE

The specification assumes that piled steel jacket structures for the Platform Structure has been proposed by the Contractor and approved by the Company.

This specification described the minimum technical requirements for the engineering, marine and construction equipment spreads and operations required for the load out, transportation and installation of the Platform and facilities.

The Contractor shall assume entire responsibility for the successful load out, sea-fastening and transportation to site of all material, structures, components, equipment and other items necessary for installation and for satisfactorily completing all installations including hook-up and commissioning work, notwithstanding any review by the Company.

3.2 QUALITY MANAGEMENT AND DOCUMENTATION

.

3.2.1 Project Planning and Execution

Load out, transportation and installation operations shall be planned and executed in accordance with the requirements of the Contract and the DNV Rules for planning and Execution of Marine Operations. Release Note of Inspection agency, on behalf of Company, at fabrication yard shall be obtained and which shall be made available to Company at Offshore Installation site.

3.2.2 Verification

The verification record control and retention system shall ensure documents relevant to obtaining Certifying Authority approvals are retained.

3.2.3 Installation Engineering Manual

An Installation Engineering Manual shall be compiled, covering all aspects of the transportation and installation of the platform component structures, including mobilization of transportation and installation vessels spreads. The installation Manual shall contain detailed information on each stage of the operation, including contingency procedures and shall identify temporary works, equipment and personnel requirements.

The installation Manual shall include but not be limited to the following contents, as appropriate

a) General

- Organization charts for Load out site(s) and offshore site.
- Vessel utilization schedule
- Schedule for transportation and installation operations
- Offshore support base details.
- Mobilization and Demobilization activities.

b) Vessel Data

- Derrick Vessels
- Support Vessels
- Transportation vessels (Cargo barges and tow vessels or HLV)

c) Load out

- Load out site details and activities
- Planning for the load out phase
- Ballasting execution plans

- Barge strengthening or reinforcement (if required)
- Load distribution mats (if required)
- Sea fastenings

d) Transportation

- Pre-Sail away inspection checklists
- Towing/transit plans, towing arrangements, ballast arrangements, navigational aids, communications procedures, contingency procedures, etc.
- Tow/ transit routes, including any alternative and proposed safe refuges.
- Proposed dates for sail away, tow/transit, and installation.
- Weather forecasting and weather limits for sail away and tow/transit.
- Repair procedures during tow/transit and at completion of tow/transit
- Post tow/transit inspection checklists.

e) Installation

- Offshore site Preparations
- Locations for existing subsea pipelines
- Location and orientation of existing jackets and other structures
- Installation equipment spread details
- Detailed installation procedures and checklists for structures, including tow/transportation vessel handling, derrick vessel anchor plans, survey, drilling and grouting procedures etc.
- Maximum sea states and weather conditions for weather installation operations
- Jacket launch/lift and up - ending, pile installation, jacket leveling procedures.
- Installing boat landing, barge bumpers, fitting and welding pump casing, sumps etc.
- Topside module installation procedures
- Removing temporary braces, lift trunnions, sea fastenings
- Installing all jackets to deck piping and utilities shown on drawings.
- Post – installation activities and inspection check lists.
- Platform hookup activities.

f) Contingency Plans

- Procedures for bad weather conditions
- Contingency procedures for piling operations, including storm ballast plan for the jacket if piling must be abandoned due to weather before storm safe.

g) Quality

- Site – specific Quality plan, including ITPs.
- Qualified weld procedures and welder qualification records
- Installation activity proformas (pile driving records, grouting records etc.)

h) Health, Safety & Environment

- Contractor HSE Plan, including JHA action sheets
- Emergency Response Plan for the offshore site.

i) Drawings and Calculations

- Installation Schematics
- Derrick vessels equipment layouts
- Cargo barge stability and ballasting calculations and details
- Temporary works layout
- Cargo barge or HLV layouts
- Anchor patterns and existing subsea pipeline locations
- Sea fastening and grillage layouts and details
- Jacket on-bottom weight and mud mat reaction pressures
- Weight and Centre of Gravity data for all installed items
- Relevant structure drawings

3.2.4 Certification

Material Certificates shall be provided for all materials used for both temporary and permanent works, including at least for the following

- Temporary load bearing attachments
- Lift rigging
- Welding consumables
- Cement
- Coatings

3.2.5 Traceability

Traceability records shall be provided and maintained for –

- Steel Plate Material heat /cast numbers shall be Transfer to Primary & secondary Structural Members
- Welding consumable batch numbers
- Weld procedure numbers

- Welder identification numbers
- NDT reference
- Post weld heat treatment records
- Weld repairs

3.2.6 Manufactures Data Report

Documentation for welding to any part of a structure and all over as-built data shall be complied into a MDR, which shall contain the following as a minimum, an appropriate –

- Approved welding procedures
- Welder qualification records
- Approved NDT procedures and NDT personnel qualification records
- Traceability records
- Plate Material test certificates
- Pipe Material (API 5l or API 2B) Rolling Mill Test Certificate as well Plate Material Mill Test Certificate.
- Welding consumable test certificates
- NDT records
- Post weld heat treatment records
- Dimensional control records
- Site preparation details
- Survey and inspection records
- Underwater inspection records (including video if available)
- Pile diving records
- Grouting records
- Hook-up activities quality records
- Engineering calculations and analysis results
- Technical manuals
- Basis of Design
- Barge Crane log shall be submitted for Jacket, Deck, Top Side Modules and Piles (single section pile). Same shall be the part of Manufacturing Data Book.

3.2.7 As-Built Report

The Offshore platform As-Built Report shall comprise the MDR and a summary of all work performed. Non-MDR documentation shall include but not limited to the following –

- Daily Tow/Transit Reports
- Daily progress Reports from derrick vessels at the offshore site.

- Transportation and installation program (actual versus planned)
- Record of mobilization activities
- Record of loadout site activities
- Vessel utilization schedule (actual)
- HSE Report
- Contract Variations

In each section, manning levels, durations, problems, encountered, highlights and the like shall be included.

3.3 HEALTH & SAFETY AND ENVIRONMENTAL MANAGEMENT

i. All transportation and installation activities shall be planned and executed to minimize risk to personnel health and safety and to the environment, in compliance with the HSE Plan.

All statutory regulations at the load out site, along the tow/transit route and at the offshore site shall be complied with, including –

a. SOLAS requirements

b. IMO Convention on the international Regulations for Preventing Collisions at Sea (COLREG), 1972 and Amendments.

c. IMO MARPOL 73/78 and Amendments (including The International Convention for the Prevention of Pollution from Ships).

ii. Contractor shall submit the copies of following documents and latest/valid survey certificates in respect of all vessels proposed by the Contractor for transportation/installation/towing in compliance with General Condition of Contract.

Certificate of Registry, Certification of Classification, Certificate of Class, Cargo Ship Safety Construction Certificate, Cargo Ship Safety Equipment Certificate, Cargo Ship Safety Radio Certificate, Safety Management Certificate, International Oil Pollution Prevention Certificate, International Load Line Certificate, International Tonnage Certificate, DG Shipping License and Insurance Certificate.

3.4 LOADOUT

3.4.1 General

The method of loadout may involve skidding, trolleying or lifting of structures. The structural integrity of the structures must be maintained during loadout. Detailed

structural analysis for loadout or lift analysis for each loadout structure shall be undertaken to verify that structural member stresses do not exceed API and AISC basic allowable during any stage of the loadout. The loadout analyses shall include studies to determine the allowable differential deflections at the structures support point, which shall become the basis for deflections tolerances during loadout. If Contractor proposes any change in the parameters or procedures from those considered in the design, he shall carry out necessary engineering as detailed in Structural Design Criteria to ensure that his procedures are workable.

Structural strength of barge shall also be checked.

3.4.2 Barge Ballasting and Structure Motions

The Loadout Supervisor shall have the authority to direct all barge ballasting and structure motions during loadout.

3.4.3 Loadout Systems

Contractor shall furnish to Company, at least 30 days prior to commencement of any load out operation, a load out procedure describing in detail the procedure, supported by calculation and analysis to ensure the compliance of design requirements, for the load out, including requirement of equipment and accessories. Contractor shall also furnish to Company the contingency pull back arrangement for retrieval of the structure during load out if the load out requires to be suspended due to some emergency reasons. Contractor shall also submit 30 days prior to commencement of load out, details of the shipment plan and final transportation analysis and sea-fastening design as described in design criteria.

The design or specification of all load out system components and temporary works items required for the operation, including, as appropriate the following–

- Winch systems
- Jacking systems
- Anchor points
- Onshore Skid beams
- Barge strengthening
- Cranes
- Transporters
- Lift points and lift rigging
- Barge mooring system

3.4.4 Cargo Barge

The adequacy of the cargo barge for stresses caused by load-out shall be verified, as will compatibility of dockside and barge arrangements for the proposed load out.

.
The ballasting procedure shall include pump discharge requirements and considerations of tidal variations during load out.

3.4.5 Equipment

All equipment and accessories involved in the skidding/lifting/trolleying of the structures shall have the proper rating and are free of damage. Critical mechanical equipment, such as ballast pumps, shall have 100% backup system on standby.

3.4.6 Skid Beams

The procurement, fabrication and installation of any onshore runway beams/skids and bulkhead barge transition beams shall be suitable to loadout the structures onto the barge, as necessary.

3.4.7 Load-out plan

The Loadout Plan shall include barge ballasting requirements during loadout and a step-by-step schedule of the loadout. Allowances for actual tidal changes and current shall be included in the Loadout Plan.

3.4.8 Verification of lifts

Where loadout is executed by lifting, the padeyes, hook shackles slings, sling platforms or frames and the structural integrity of the lifted item shall be verified. The Contractor shall procure, fabricate and install all padeyes, slings and other aids necessary for lifting.

3.4.9 Weight Monitoring

The weight and center of gravity of the structures shall be accurately reported during construction and weight monitoring reports shall be submitted to the Company on a regular basis. The final weight control report and the results of the weighing operation shall also be submitted. Any weighing undertaken prior to loadout shall achieve accuracy better than ±2%. The center of gravity shall also be determined from these monitoring.

3.4.10 Cargo Manifest

An inventory list of all items to be loaded out shall be prepared by Contractor.

3.4.11 Post Loadout Inspections

.

After loadout onto cargo or launch barge is completed, if the component has been lifted, all critical joint intersections near the padeye/lifting points on the component shall be MPI/ dye-penetrant checked to ensure that no cracks have occurred during loadout. Any defects shall be repaired.

3.5 GRILLAGE AND SEA-FASTENING

3.5.1 Design

All sea fastening and support grillage design shall be in accordance with the provisions specified in Structural Design Criteria Section 3.4 of Bid and of API RP 2A supported with following.

a) Design calculations of the sea fastening and grillages.

b) Drawings showing layouts and details of grillage and sea fastening.

c) Details of any barge strengthening required for loadout or transportation.

3.5.2 Grillage and Sea fastening Installation

Grillages and sea fastening shall be welded in accordance with relevant specification and shall be subject to 100% ultrasonic and magnetic particle inspection for full penetration welds.

3.6 LOADOUT AND SEAFASTENING INSPECTION

The Contractor and MWS shall conduct pre and post load out tests and inspections.

3.6.1 Pre Loadout Testing

Pre loadout testing of flood, buoyancy and vent systems of the jacket shall be executed in accordance with specification.

Prior and following loadout sea fastening, where possible, all vent and flood valves shall be checked several times by the Contractor to ensure easy operation. Any interference shall be eliminated. Vent and floods valves shall be left in the closed position and the valve handles shall be positively secured to the jacket.

3.6.2 Post Loadout Inspection

All structures shall be visually checked after loadout to ensure no damage has occurred during loadout operations.

3.6.3 Patch and Repair Damage

.

The Contractor shall patch and repair all damage to the structure and its protective coatings, which occur during loadout and sea fastening.

3.6.4 Loadout Operation

An appropriate ballast system shall be provided and experienced personnel shall supervise the ballasting operation. The cargo barge shall be protected from excessive motions due to environmental loading or wave action from other vessels on the waterway during loadout. Following loadout, the cargo barge shall be ballasted to its design trim and draft for tow.

3.7 TRANSPORTATION

3.7.1 General

The cargo barge and tow vessel shall be classified for unrestricted ocean service and assigned loadline with a marine Classification Society. All statutory documents, including those listed in Section 3.3(ii) above, in support of sea worthiness of entire Marine spread shall be submitted to the company 30 days prior to the mobilization to the site. All vessels and equipment shall be maintained and operated in a safe and professional manner. A comprehensive stock of spares and consumables shall be carried at all times to support the independent day to day operation of the spread. Contractor shall appoint a Company approved Marine Warrantee Surveyor (MWS) at their expense who shall review the loadout and transportation analysis and sea fastening design and review and approve the sea fastening proposed by the Contractor. The marine surveyor's scope of approval shall include verifying the adequacy of the strength of the barge deck and framing to withstand the load due to load out, transportation of the cargo and sea fastening and launching of jacket.

The cargo barge and tow vessel shall be inspected and approved for the tow by the MWS prior to mobilizing to the fabrication site. The survey shall include all aspects of the vessel, manning suitability of accommodation on derrick / work barge etc. All certificates relating to the tow vessel and cargo barge, which are in accordance with the relevant statutory requirements, shall be carried onboard the tow vessel.

3.7.2 Cargo Barge Requirements

A dynamic motion analysis of the barge/cargo system shall be performed as per the Design criteria. The transportation barge shall have sufficient global and local strength for the loadout and transport of the cargo. Calculations shall be completed demonstrating that all barges and cargo comply with all allowable stress limits set forth by the AISC and API RP 2A codes, and the barge's classifying authority for all loading conditions encountered during loadout , transportation and launching, as applicable.

.

The cargo barge shall have sufficient positive and reserve buoyancy for all proposed operations. The barge shall have an acceptable stability and buoyancy and remain floating in an acceptable manner with any one submerged or partly submerged compartment flooded.

3.7.3 Tow Vessel Requirements

The tow vessel shall have a rated bollard pull at least equal to the design tow resistance of the transportation barge and its cargo. The tow forces shall be calculated by CONTRACTOR based on the anticipated environmental conditions along the tow route, vessel speed, requirements of API RP 2A and Design Criteria Structural Section 3.4. As a minimum, ambient see conditions and the design storm/stall conditions should be considered. All towing resistance forces shall be assumed to be acting concurrently against the direction of the tow.

The tow vessel shall have latest Certificate of Rated Bollard pull issued by a reputed inspection authority.

3.7.4 Towing Arrangements

All components of the towing arrangement shall have acceptable factors of safety against the design tow resistance. The towing arrangement shall be inspected and approved by the MWS at the same time the tow vessel is inspected, prior to mobilization to the fabrication site.

3.8 LIFTING

3.8.1 Responsibilities

The Contractor assumes complete responsibility for all lifts of platform structures and appurtenances as required for installation. The responsibilities include, but shall not be limited to –

a) Overall installation planning

b) Detailed engineering and providing of all labour, supervision, materials and offshore installation equipment required to perform a safe and successful lift, in accordance with the design drawings and the Installation Procedure.

c) The Installation Procedure shall include detailed descriptions of all operations and procedures.

3.8.2 Design

All calculations required to confirm the adequacy of all lifting operations shall be completed. Analysis shall include a review of re-analysis of the structure for the

proposed lift conditions, design of padeyes and other lifting appurtenances and selection of all lifting hardware, rigging, slings etc. All components shall be designed so that eccentric loadings are minimized or eliminated. Final weight and center of gravity positions based on detailed weight take off and / or actual weighing shall be used in all design. Contractor shall provide following information 30 days prior to load-out/installation:

- De-rated capacity of barge crane and test record witnessed by a reputed inspection agency.
- NDT test records of all lifting equipment including lifting hooks.

3.8.3 Shackles

All shackles shall have valid manufacturer's load test certificates. Used shackles which are free from any visual damage/deterioration and accompanied by load test certificates and satisfactory NDT reports can be used. Load in shackles and other fittings shall not exceed the manufacturer's rated safe working load.

3.8.4 Slings

All slings shall have valid manufacturer's breaking strength test certificates. Used slings, free from any kinks, fraying or other visual damage with a documented history of previous lifts, storage, load test and inspections are acceptable. Load in slings shall not exceed the manufacturer's rated safe working load. Lifting slings shall be of sufficient lengths to ensure that the true angle of any sling with respected to the plane through the lifting points is not less than 60 degrees. All paired rigging elements (slings) for any one particular lift shall be of the same diameter and type. Over sized slings and slings having kinks, fraying, visual damage and deterioration shall not be used.

3.8.5 Protection of Equipment

All slings, spreader bars or other lifting apparatus, shall be arranged so to prevent damage to equipment and other components of the lifted item, during all phases of the lift. Adequate temporary bumpers and guides shall be provided to prevent damage during installation. Protection shall be given to both the item being installed and any previously installed items.

3.9 JACKET INSTALLATION

3.9.1 General

On arrival of Jacket at the site of Installation and before proceeding for Installation, Jacket shall be inspected by Company appointed Inspector and ensure no defect to the Structural Members. A report shall be generated and documented as as-built

documentation. In case of defects are observed, repair work is to be taken up with approved procedure and completed before proceeding for installation.

Installation Contractor shall also inspect all installation aids to ensure safe and smooth installation.

3.9.1.1 Drivability Analysis

The Contractor shall perform pile and conductor drivability and stick up analysis using the proposed hammer(s) and the geotechnical reports in compliance to Structural Design Criteria section 3.4 of bid document.

3.9.1.2 Survey Spread

The Contractor shall engage the services of a qualified Surveyor with the appropriate survey equipment to assist with the setting of jackets within the tolerances stated in this Specification.

3.9.1.3 ROV Spread / Divers

Contractor shall provide an ROV spread and divers on the derrick vessel capable of seabed inspection and assisting with retrieval of dropped items.

3.9.1.4 Anchor Handling

The Contractor shall be responsible for all anchor operations. The Contractor shall be responsible for adjusting anchor operation to avoid damage to existing platforms, pipelines, subsea well guards or any subsea facility. Subsea care shall be exercised near existing platforms and pipelines when running anchor or anchor lines from construction barges and boats. Before placing any anchors or anchor lines, the Contractor shall clearly define to the Company and shall obtain approval of the proposed location of the anchors or anchor lines.

3.9.2 Seabed Survey

Contractor is responsible for verifying the accuracy of all survey information. Any additional seabed survey performed by the Contractor prior to installation shall cover an area extending from the outline of the jacket on the sea bottom. The survey should accurately locate all existing platforms, pipelines, subsea well guards or any subsea facility. The extent of the area should encompass the extent of all activities, including the reach of all anchors.

3.9.3 Platform Location and Tolerances

3.9.3.1 Jacket Location and Orientation

.

The jacket shall be set within 2.50 M of the required location. The bearing of the jacket shall be within two (2) degrees of the required location.

The Location position & Orientation check shall be witness by Company Inspector. Report shall be generated and documented as As-built Documentation.

3.9.3.1.1 Jacket Level

The final as-built level of the jacket shall be the within 1:140 of horizontal and the extreme opposite diagonal points in the jacket top level shall be within 25 minutes with the horizontal. If at any stage of jacket and pile installation the out-of-level exceeds the above tolerance, the Contractor shall bring the jacket back to within the level tolerance by lifting, de-ballasting or jacketing on the installed piles.

The ballasting and pile installation sequence shall be such that on bottom jacket weight will not exceed a safe value determined in accordance with the results of an on bottom analysis documented in the installation Manual.

Jacket leveling activity shall be taken up during pile installation. The Location Level check shall be taken up and witness by Company Inspector. Report shall be generated and documented as As-built Documentation.

3.9.3.2 Jacket Elevation

The final jacket elevation shall be within (+/-) 750 mm of the design elevation. Following weld-out of the piles to the tops of the jacket legs, the tops of the Piles will be cut off to the required elevation. The final jacket elevation will also determine the elevation at which the boat landing is installed on the jacket.

3.9.4 Jacket Launch

If the Contractor proposes for jacket launching in their concept, the following responsibilities include, but shall not be limited to:

3.9.4.1 Vent and Flood Valves

Prior to jacket installation, the Contractor shall inspect and verify that all valves are closed and that all installation piping is intact.

3.9.4.2 Weather Window

Prior cutting sea fastening, the Contractor shall have a weather forecast sufficient to ensure it would be reasonably certain that no severe weather will occur before the jacket is secure on bottom. Installation will not be permitted unless the current sea state and its direction is less than the maximum safe values as determined by the installation analysis and included in the installation Manual.

3.9.4.3 Sea fastening Removal

All cuts on brace, used for sea fastening shall be made so that brace material remains on the launch cradle/jacket member, to avoid damage to any jacket member including launch cradle. Tie-down braces on jacket members or lugs should be avoided. Where these are used they shall be removed so as to avoid cutting into any permanent structural member. To remove any stub from these areas or from painted areas tie-down brace member shall be cut and the protruding portion shall be grounded and surface shall be painted.

3.9.4.4 Launch and Upending

The jacket should be launched and upended at a predetermined launch site. A minimum bottom clearance should be determined by the Contractor for all phases of launch and upending operations in compliance with Design Criteria Structural, Section 3.4.

In case of installation of jacket by launch/sliding method, Adequacy of Connection of Buoyancy tanks with jacket legs shall be checked for hydrostatic collapse during launching of jacket and dog plates shall be provided for safe launching of jacket.

3.9.5 Jacket Setting

The jacket shall be set within tolerance given in Section 3.9.3. The Contractor shall maintain the specified location, orientation and level of jacket through completion of pile diving. The contractor shall report the as-built levels of jacket during the progress of the piling.

3.9.5.1 On successful placing of the jacket, on the seabed (on-bottom condition at the designated location), Contractor shall carryout Mud Mat survey to check absolute and differential settlements of jacket at mud line for the entire jacket. This survey shall be witness by Company Inspector and Report shall be generated and document with Video recorded data. This shall be part of As-built Documentation.

3.9.5.2 On successful placing of the jacket, on the seabed (on-bottom condition at the designated location), Contractor shall secure the jacket by pinning at least two main/ skirt piles. These piles shall be pinned/ drived in two diagonally opposite legs.

3.9.5.3 Special care shall be taken so that there is no damage to the jacket during installation. Any damage to the jacket structure, to the protective coatings, or to the cathodic protection system etc. shall be repaired by the Contractor.

3.9.6 Pile Installation

On successful placing of the jacket on the seabed (on-bottom condition at the designated location), Contractor shall flood the jacket legs, buoyancy tank in compliance to the On-bottom Stability Analysis consideration. Flooding condition of Jacket Legs & Buoyancy Tank shall be checked, which shall be witnessed by Company Inspector. Report shall be generated and documented as part of As-built Documentation.

Removal of Buoyancy / Stability Tank shall be taken up only after securing jacket in position by pinning at least two main/ skirt piles. These piles shall be pinned/ drived in two diagonally opposite legs. Connection of buoyancy tank/ stability tank with jacket member(s)/leg(s) shall also be designed and checked for pile driving.

3.9.6.1 Installation Procedure

The Pile installation procedure included in the installation manual shall include the following-

- The sequence of piles to be installed.
- Pile add-on details, if applicable.
- The effect of pile operation to on-bottom stability.
- Ballast / de-ballast required to maintain safe on-bottom stability
- Detail of pile handling, hammer handling, followers, ROV's etc.
- Derrick vessel crane reach and capacity values.
- Pile remedial procedure for refusal of pile.
- Use of Front follower with hydraulic hammer for driving of vertical skirt pile using under water hammer

3.9.6.2 Pile Driving

EQUIPMENT

Prior to commencement of pile driving, hammers and other equipment shall be certified to be in good working condition. Hammers shall be maintained and operated safely at all times.

CUSHION BLOCK

A cushion block shall be provided at the base of the hammer. Cushion block material shall be of a type compatible with the hammer and acceptable to the hammer manufacturer. Cushion material shall be of sufficient size to fill recess in anvil to full diameter, but not to exceed thickness recommended by manufacturer. The cushion material shall not be allowed to compress to the point that the cushioning effect is lost. Cushion performance criteria (i.e. maximum number of blows for a given cushion and hammer type) shall be recorded. Cushions shall be replaced in accordance with these criteria.

HAMMER

Designated Hammer and Refusal mitigation Hammers shall be deployed in compliance to Pile Drivability Analysis approved by Company. Driving activity shall only be taken up upon availability of workable hammers (Designated & Refusal mitigation)

PILE MONITORING & RE-STRIKE TEST DEVICE

Contractor shall deploy Qualified Agency along with Pile Monitoring & Re-Strike Test Device in compliance to following Para.

3.9.6.3 HAMMER, PILE MONITORING AND RE-STRIKE TESTING

Contractor will provide details of 'pile monitoring devices' proposed prior to installation of jacket and shall be included in installation procedure

A. Hammer Monitoring

The Hammer Monitoring shall include, but not be limited to the following: -

a) Hammer monitoring shall be performed for all hammer operations. CONTRACTOR shall ensure that the hammer spread used complies with Drivability Analysis and also with the following requirement.
b) CONTRACTOR shall provide person(s) who are fully competent and experienced in operating the hammers, to supervise and obtain all hammer monitoring data.
c) In the event that Contractor's hammer fails to deliver sufficient energy or breaks down, Contractor shall complete the pile being driven with another appropriate hammer in the spread. Pile driving shall not commence on any pile without appropriate back up hammer.
d) Standby of the construction and transportation spreads shall be at Contractor's cost if piling cannot commence or continue due to hammer inefficiency, malfunction or unavailability.
e) Hammer monitoring and pile monitoring shall form part of a coherent and coordinated pile installation strategy. CONTRACTOR shall identify key personnel in this regard and define the communication channels to facilitate successful pile installation.
f) Energy applied through Hammer shall be compared with the energy recorded through the Pile Monitoring to work-out the effectiveness of Hammer.

B. Pile Monitoring and Re-strike Testing

The Pile Monitoring re-strike Test shall include, but not be limited to the following: -

i. CONTRACTOR shall provide pile monitoring services for the piles of each of the jacket structures. All the piles of each platform shall be monitored (the last two sections of each pile shall be instrumented for this purpose) unless specifically advised otherwise by the Company.

ii. CONTRACTOR shall engage a **Specialist Geotechnical Engineering Consultant** for the work, approved by the Company, having relevant experience in pile monitoring, re-strike testing and interpretation. CONTRACTOR shall submit the prospectus of the said consultant firm, for approval of the Company, complete with details of previous experience and resume of the engineers who will be involved in the actual performance of the instrumentation; monitoring and interpretation.

iii. CONTRACTOR shall determine, provide/supply and test all necessary equipment/accessories/ facilities that are required for Pile Monitoring and re-strike testing.

iv. Contractor shall submit to the company details of pile monitoring and re-strike procedures which shall include but not be limited to:

a) Details of Pile Monitoring Equipment Spread to be made available during pile installation with sufficient spare strain gauges, accelerometer, Pile Driving Analyser, required software for data interpretation e.g. CAPWAP including all necessary hardware and software.
b) Details of proposed procedure for re-strike testing.
c) Method of data analysis and interpretation.
d) Operational aspects of installing instrumentation, data acquisition and removal of instrumentation.
e) Calibration details of instrumentation and equipment.

v. CONTRACTOR shall provide continuous pile monitoring services and shall make available during driving, in real time, the following information to COMPANY.

a) Soil resistance to driving.
b) Magnitude of maximum pile stresses during driving.
c) Hammer blows per foot of penetration.
d) Hammer stroke.
e) Hammer blow rate.
f) Hammer efficiency (defined as ram energy at impact as a ratio of hammer rated energy).
g) System Efficiency (defined as energy actually transmitted to pile as a ratio of the hammer rated energy).

vi. CONTRACTOR shall provide the following information at the end of driving of each pile if pile meets acceptance criteria:

a) Blow count per feet of penetration for entire depth of penetration (immediately after pile driving).
b) Hammer and system efficiency.
c) Soil resistance to driving.

vii. If piles meet refusal (before pile reaching design penetration), CONTRACTOR shall provide the following information immediately after pile driving:

a) Blow count per feet of penetration for depth till point of refusal.
b) Hammer and system efficiency.
c) Soil resistance to driving.
d) Recommendations on remedial action.

viii. Criteria for Re-strike Testing

The Re-strike Testing shall include, but not be limited to the following:

a) Re-strike Test shall be carried out after a minimum 24- hour set-up period.

b) Piles driven with target penetration, Re-strike Test shall be performed normally for two (02) piles (fitted with the re-strike test instrumentation) for jackets having up-to 12 Piles. Jacket having more than 12 Piles, Re-strike Test shall be performed on four (04) Piles. These Piles shall be selected from Piles excluding pile driven last.

c) Piles encountering refusal, re-strike test shall be performed on all of the refused piles.

d) Pile re-strike length shall be minimum 0.5 m over the overdrive allowance.

e) During actual re-strike Test period, Pile driving for other pile cannot be carried out. But during preparation of Re-strike Test, Pile driving for other pile is permitted.

f) Cost on account of re-strike test shall be included in the project cost. Any additional re-strike test other than specified above shall be paid in terms of barge day rate charges only for the duration of re-strike test but not for the duration for preparation time for re-strike test.

C. Responsibilities of the Specialist Geotechnical Engineering Consultant

a) Consultant shall review hammer, pile and soil information as well as proposed installation procedure and drivability in co-relation to Soil Report.

b) Consultant shall carry out the drilling and tapping instrumentation holes near the pile top of the sections of the piles to be monitored at the fabrication yard.

c) Consultant shall install required gauges on the pile sections and shall observe lifting, upending and stabbing operations and advise the Contractor's personnel during the activities so as to avoid damage to the installed instrumentation.

d) In case of damage to the instrumentation during these activities, the Consultant shall replace gages through use of steel man basket after the pile welding activity is completed.

e) Consultant shall observe the pile driving and take all necessary steps in coordination with installation contractor to avoid damage to the installed instrumentation.

f) All activities at the offshore site not covered above, but essential for successful data acquisition, monitoring, re-strike testing and interpretation.

D. Document Generation & On-Board Report:

As minimum following records & On-board reports for Pile Driving related to Hammers and Pile Monitoring and Re-Strike Test shall be documented and issued to the Company Design Consultant with 24 hours of driving each pile:

i. Blow count record for every feet of pile driving duly witnessed by Company appointed Inspector.

ii. Hydraulic Hammer computerized input data (like Date, time, identification of pile/pile segment, Hammer efficiency applied, Stroke length, Blows per minutes) & output data (Oil Pressure, Blow counts, Soil Resistance, Energy applied, etc.) print out duly witnessed by Company appointed Inspector.

iii. Details of stoppage of Pile Driving supported with valid reasons.

iv. Submission of Pile Driving Analyzer (PDA) Data File soft copy.

v. Print outs from Pile Driving Analyzer data duly signed by geotechnical consultant, contractor's representative and Company appointed Inspector.

vi. Pile monitoring Records like Hammer Blows, Maximum Force, Maximum Energy, and Maximum Stress at gauge location.

vii. Comparison of Energy recorded by Pile Analyzer Vs Energy applied by Hammer to establishing Hammer performances.

Pile Driving Records after driving each segment of Pile data recorded daily vide point no. ii , iv, v, vi above shall be submitted to the Company within two hours (after completing the driving each segment of pile or re-strike activity) of driving through Documentation system (OPMAC), by Fax and Mail.

E. Post Installation Pile Driving, Monitoring and Re-strike Test Report

A post-installation pile monitoring report shall be submitted to COMPANY within thirty (30) days after completion of piling activity and shall include but not be limited to the following:

Successive interim report for Pile capacity achieved and long term Capacity estimation within 2 days of every pile driving till target penetration shall be submitted. Complete Pile Monitoring report with pile capacity achieved and long term capacity along with Factor of Safety estimation shall be submitted to Company within one week after completion of pile driving activities and shall include but not be limited to the following:

a) Details of Scope of Work.
b) Summary of hammer performances (complete with hammer numbers with traceability).
c) Details of stoppages and their reasons.
d) Pile stresses during driving.
e) Computation of soil resistance to driving using CAPWAP software.
f) Presentation of CAPWAP results – Soil dynamic parameters, Skin friction resistance distribution & Max. Compressive & tensile stresses.
g) Comparison of predicted and measured/computed soil resistance to driving.
h) Estimation of long term static pile capacity.

3.9.6.4 FIELD SPLICES OF PILES

Welding shall be according to Specification "Structural Welding and inspection for Offshore Platforms'. If the Contractor wishes to reduce the forty-eight (48) hours waiting period for flux core welding inspection, procedures which address the avoidance of hydrogen induced cracking shall be submitted to Company. Reduction in the waiting period shall only be allowed if approved in writing by Company.

Contractor shall 100 % ultrasonically inspect all field splices. Ultrasonic examination will follow the procedures and acceptance criteria of API RP 2X. Defect acceptance will be in accordance with level 'C' inspection. Each field butt weld in all piles shall be allowed to cool to a temperature below 120°F before ultrasonic examination or advancing of pile in any manner, either by diving or by free fall.

3.9.6.5 DRIVING RECORDS

Company appointed Inspector shall physically witness the Energy application on the Driving Control Unit of the Hydraulic Hammer and record same on the report. The Contractor shall keep complete and accurate pile diving records on each pile driven and shall furnish a copy of these records to Company's designated Office within two (2) hours after driving that pile duly witness by the Company appointed Inspector. All pile driving records shall be documented as part of As-built Documentation. In case of Pile Monitoring device is adopted, data obtained using same shall be document as as-built documentation.

These records shall include dates, times, drilling and / or jetting operations, shutdown and reasons for same and all other pertinent information including, but no limited to, the following-

- Platform & Pile identification
- Actual length of each pile section and cut-offs.
- Penetration of pile under its own weight.
- Blows per foot and penetrations during all pile driving with hammer identification.
- Date and Times of start and end of driving for all sections of all piles and time spent for add on piles on welding operations.
- Final penetrations of all piles.
- Driving Control Unit input Data & Output data print shall be provided for Hydraulic Hammer.
- All time lost during bad weather and status of pile driving at that time including any interruptions.
- Steam pressure (if applicable).
- Hydraulic pressure (if applicable)
- Blows per minute and penetration.

- Stroke height.
- Cushion block data (total blows on cushion).
- Hammer used (make and model).
- All necessary data to determine the energy output oil either the steam of hydraulic hammer.
- Elevation of soil plug after driving each add-on and internal water surface after driving each pile.
- Pertinent data of a similar nature covering driving, drilling and grouting.
- Any unusual phenomena or occurrence during driving.

3.9.6.6 The lead sections and subsequent add-ons of piles shall be installed as per the piling sequence developed during engineering. The jacket leg in which the rubber diaphragm is to be punctured shall be completely flooded before puncturing.

3.9.6.7 Contractor shall take every precaution to prevent damage to grout seals during pile stabbing and driving. All lifting eyes, etc., shall be removed and the outside face of the pile ground smooth prior to driving the pile section.

3.9.6.8 If the level of jacket is outside the specified tolerances, the leveling of the jacket shall be performed at the dog-off stage. The dog plates shall have a holding capacity of at least 1.5 times the jacking load applied for leveling. The dogs shall be retained in position in all main piles other than the pile being driven and shall be welded back after driving is completed.

3.9.6.9 Jacket level measurements shall be taken at regular intervals during piping and reported to Company. Should any tilt take place during pile driving, it shall be corrected before further driving of the pile. No leveling operation shall be carried out after any pile has reached design penetration, unless specifically approval by Company.

3.9.6.10 The piles shall be sequentially driven to the design penetration, taking one pile at a time with minimum delay during welding of add-ons to avoid refusal due to soil set up.

3.9.6.11 Skirt piles, if any, shall be installed after all main pile driving operations are completed.

3.9.6.12 In case of platforms with only skirt piles and no main piles, specific procedures for leveling the jacket shall be developed by the Contractor.

3.9.6.13 Refusal

a. The refusal criteria for piles and conductors shall be as per API RP-2A or hammer's manufacturers criteria which shall be decided during detailed engineering.

b. In case of Pile met refusal, as per Bid Document Clause no. 5.6 of Volume -1, Contractor shall deploy higher capacity hammer (designated as **Refusal Mitigation Hammer**) as first remedial measure. Pile Drivability Analysis shall be carried out from the Design Stage of Engineering for the Refusal Mitigation Hammer as Plugged Pile and Soil partial Set up condition (considering clay soil develop full strength in 7 days' time) up to full depth of Pile.

c. If refusal takes place on account of soil set-up caused by delays due to malfunctioning, breakdowns of Contractor's equipment or any other cause attributable to the Contractor, it shall be the Contractor's responsibility to take measures to develop the required capacity of the pile without any effect on time and cost to the Company.

d. In case of refusal as specified in c) above, it shall be the Contractor's responsibility to employ other acceptable means of attaining the desired penetration, by driving the pile after removing the soil plug by jetting and or pile top drilling and putting back the equivalent soil plug with concrete layer at top after Pile Driving to the Design penetration. Company's approval of all pile remedial procedures shall be obtained prior to taking up such work.

A detailed investigation to ascertain the reasons for pile refusal shall be carried out by Contractor at no extra cost and time effect to Company. Detailed report of the findings shall be submitted to Company for review.

3.9.6.14 Penetration

Piles shall be driven to the design penetration by normal driving methods. The Contractor shall operate and maintain pile driving equipment in accordance with manufacturer's recommendations and accepted construction practices, the intent being to advance piles expeditiously to achieve design penetration. If required, pile cut-offs shall be made as detailed on the drawings.

3.9.7 Mechanical Pile Connectors

If mechanical pile connectors are used, the Contractor shall be responsible for procurement of all specialty materials and pieces of equipment. Back-up/standby shall be required offshore for all essential equipments. All procedures shall be accordance with specifications of the manufacturer. The use of mechanical pile connectors shall be subject to approval by Company.

3.9.8 Jacket to Pile Connection

Jacket to pile connections shall be made as specified in the design. Any adjustments necessary to correct discrepancies in jacket setting elevations, deck leg length etc. shall be taken up by means of either over / under lengths of legs or pile tops or by transition pieces, depending upon the design.

Shim plates shall be used for connecting main piles with the jacket.

3.9.9 Pile Cut-off Report

The Contractor shall furnish to Company a pile and conductor cut-off report. This report shall include the exact length for the pile when stabbed, the cut-off measurement, the total length of pile actually driven and the total amount of cut-offs made.

3.9.10 Post Installation Inspection

Following completion of the jacket installation, Contractor shall perform a visual underwater survey of the jacket, the seabed location at the pile locations, pile sleeves (if any), anodes etc. The report, shall record the inspection and any sustained damage, shall be provided to Company.

3.9.11 Post Piling Operations

The following operations shall be carried out by the Contractor after completion of all piling.

a) The substructure/jacket to pile shim connection in case of main pile, if any, shall be installed only after all pile driving including the skirt piles is completed.

b) All installation aids such as temporary guider/ bumpers, grout line, vent line etc., skirt piles guides, including their supports up to and including elevation of (-) 25.00 M shall be removed. Buoyancy tanks, if provided, shall completely be removed. However, removal of buoyancy tank(s) shall also be in compliance to clause no. 3.9.6 of this functional specification.

c) The contractor may use front follower to drive skirt piles & to keep maximum length of pile upto 5.0 m above skirt sleeve during driving of skirt piles.

d) Excess length beyond 5.0 m above skirt sleeve shall be cut by the contractor. Under water cutting of excess length of pile shall be in the scope of the contractor with no extra time & cost to the company.

e) Soundings shall be taken to determine the level of the soil plug inside the pile. In case the soil plug has gone down appreciably and if it is found necessary as a result of engineering calculations, it shall be Contractor's responsibility to provide grout plug of adequate length, to develop full end bearing without any cost and time effect to the Company.

3.9.12 Calibration certificate shall be obtained from the Manufacturer of the respective equipment. Original copy of Calibration certificate shall be submitted one month prior to mobilization for Installation for following Equipment:

i. Installation Barge Crane,
ii. Hammers for Pile & Conductor driving,
iii. Drilling Equipment,
iv. Jetting Equipment, Grouting Equipment.
v. Internal Lifting Tool (ILT) for lifting of piles

3.10 Grouting:

All grouting shall be done immediately after piling is completed. In cases where the piling & grouting are not done immediately after placement of jacket on the seabed, the annulus between the pile and jacket leg shall be thoroughly cleaned by means of approved chemicals/procedure prior to commencement of grouting. Grouting

Methodology from Bottom of Jacket or from top of Jacket shall be specified during detail Engineering and accordingly Drawing shall be developed:

3.10.1 Grouting from Bottom of Jacket (applicable for Main Legs & Skirt Legs): Methodology described below:

3.10.1.1 Grout

The cement used for grout shall be as specified in General Specification No 6001F. The grout shall be of a non-shrinking expansive type with minimum compressive strength of 70 kg/cm^2 (1000 psi, 7 MPa) at 24 hours and 281 kg/cm^2 (4000 psi, 27 MPa) at 28 days at 27 ± 2 degrees C. A target grout density of 1920 kg/cu m (16 lbs/gallon) shall be maintained during placing of any grout. The Contractor shall furnish results of tests made on samples of cement taken at the time of shipment and certify that the applicable requirement of this specification have been met including the minimum compressive strength for 24 hours and 28 days. This test shall closely simulate, the field conditions, i.e. admixture contents, sea water maximum water content ratio etc. The laboratory test procedure shall be in accordance with ASTM 109. Contractor shall transport for the purpose of construction at site the same batch of cement and ingredients for which the tests are performed.

Contractor shall provide adequate number of metal cube moulds of 10 cm size for preparing samples during grouting of subsequent compression tests. A minimum six samples per stage of grouting or pile shall be taken for testing. The Contractor shall also provide on barge a compression testing machine and shall conduct compression tests after 24 hours curing period of cube samples taken during grouting. The results of these tests shall be submitted to Company's representative immediately after completion of tests. A suitable tank shall be provided for storing and curing cubes prior to testing. The Contractor shall carry out the 28 days compression tests either on the barge or on a short based compression testing machine and submit the results to the Company. If the test result does not satisfy the minimum compressive strength requirements, Contractor shall be responsible for making suitable rectification measures to ensure adequate load transfer to the pile.

3.10.1.2 Grouting Procedure

a) Grouting operations shall start only after jacket to pile shim connections are completed.

b) Prior to grouting, all grout lines and annulus of Pile – Leg/skirt leg shall be flushed with sea-water, at a rate of not over 950 liters per minute, to assure free passage of the grout and cleanliness of the annulus. Flushing shall be carried out from bottom most point and shall be continued till clear water cones out. A report shall be generated for this activity duly witness by company appointed inspector.

c) Grout shall be mixed in a high speed mechanical or jet mixer and then passed through a strainer into pumping equipment, which is provided for recirculation. Grout shall be pumped into the annulus as soon as possible after mixing.

d) Contractor shall mix and pump a volume of grout equal to one and one half times the theoretical volume of the annular space to be filled. A report shall be generated for this activity duly witness by company appointed inspector.

e) In the event of blockage or an interruption of grouting, Company reserves the right to require Contractor to remove all grout from the annuli by flushing with water under pressure, and to have the grouting procedure repeated.

f) Slurry density shall be monitored during grouting operations. If the Contractor proposes to use a continuous mixing process, an automatic density-meter recorder shall be used. If he proposes batch mixing the density of slurry of each batch shall be measured. A report shall be generated for this activity duly witness by company appointed inspector.

If the measured slurry density is less than 1800 kg/cu.m. (15 lb/gal.), the grout shall be diverted on board into the disposal tank until the slurry density has returned to the specific value. A volume of grout equal to the volume diverted away shall be added to the volume of the slurry to be pumped in order to maintain the correct volume.

g) The Contractor shall use inflatable or passive grout seals and grout the annuli if he proposes a single stage grouting system. The procedure shall be as follows:

i) If water is used as the inflation medium, a pump capable of filling the inflate lines and pressurizing them upto 35 kg./cm and a manifold system with multiple pressure gauges for inflating and monitoring individual piling seals shall be used.

ii) If air is used as the inflation medium, a separate cylinder with a pressure regulator and gauge for each piling seal shall be used. Cylinders shall be capable of inflation pressure as predetermined from the manufacturer's recommended air inflation chart for the particular seal, grout density, and water depth.

iii) When water is used as the inflation medium, the inflation pressure (measured at surface) shall be as recommended by the grout seal manufacturer and shall be maintained within ±10% variation throughout the grouting operation.

iv) When air is used as the inflation medium, the inflation pressure (measured at surface) shall be as recommended by the grout seal manufacturer, and shall be maintained within ±5% variation throughout the grouting operation.

v) When water is used as the inflation medium, the inflate line shall be filled with water slowly at intervals to allow sufficient time for air inside

the line to bleed back. Sufficient measures and precautions are to be taken to ensure that all air is bleed out from inside the inflate line before the line is fully pressurized.

vi) After the grout seal is properly inflated and prior to grouting, the annulus and the grout line shall be flushed with sea-water at a rate of not over 950 liters per minute in order to ensure free passage of grout and to establish circulation.

vii) After grouting is completed, the inflate pressure in the grout seals shall be maintained for a minimum period of 24 hours.

viii) Contractor shall specify a back-up system he proposes to employ for completing the installation job in case of failure of the packers, inflation lines, or grout lines.

h) The density of the returned grout at the top of the jacket shall be measured to have a minimum to have a minimum density of 1920 kg/cu m. The jacket pile annulus can be considered to be completely grouted only when this criterion is satisfied.

Two openings one on the high side and the other on the low side shall be left open for purposes of monitoring return grout. The remaining seal plates shall be welded only after two hours of completion of grouting during which the grout level in the annulus shall be monitored and topped up by grout if required.

i) If at any stage of grouting, any of the grout lines clog, the remainder of the annulus shall be filled using diver operated grout ports provided in the legs.

j) Care shall be taken, during and after the grouting to clear grout splatter, overflow and drippings from the structure.

k) Contractor is liable for any damage to grout lines and inflate lines, which occurs as a result of installation operation.

l) After completion of the entire grouting operation to the satisfaction of Company's Representative, all flooding and grout lines and accessories including their supports shall be removed from top of

jacket, upto a depth of (-) 25.00 m. A report shall be generated for this activity duly witness by company appointed inspector.

3.10.2 Alternative Grouting Procedure: Grouting from top of Jacket (applicable for Main Legs only):

In this method Grouting shall be taken up from top of jacket.

Grouting operations shall start only after jacket to pile shim connections are completed.

Grout packer shall be placed at the bottom end during fabrication stage.

Prior to grouting, all grout lines and annulus of Pile – Leg/skirt leg shall be flushed with sea-water, at a rate of not over 950 liters per minute, to assure free passage of the grout and cleanliness of the annulus. Flushing shall be carried out from bottom most point and shall be continued till clear water cones out. A report shall be generated for this activity duly witness by company appointed inspector.

The annulus shall be made free from water by repealing water by applying pressurizing air from top of Pile. Repealing water from annulus shall be ensured by observing air bubble coming out from the Jacket leg bottom (i.e. gap between Pile & Jacket Leg Grout seal). In case, air bubble is not coming out, then emergency port located near mudline shall be opened to ensure repealing of water from annulus. A report shall be generated about repealing of water from annulus and duly witness by Company appointed Inspector and documented.

On completion of above stated activity, grouting methodology / procedure are similar as specified in Clause 3.10.1.

In this method of Grouting, Mudline Horizontal Framing grouted Joints (Jacket leg & pile) shall be designed as un-grouted Joint as in this procedure cleaning of contaminated annulus is not possible.

3.11 TOPSIDES INSTALLATION

3.11.1 General

This section will apply to the Topsides modules and any other installation other than work related to the jacket and piles.

The Contractor shall field-adjust transition pieces connecting the deck legs to jacket and shall place the superstructure/deck within the tolerances specified The Contractor shall remove any temporary deck structure, installation guides etc. (if any) already installed. Contractor shall take all necessary measures /

precautions to avoid damage to the Topsides and jacket while removing the temporary deck.

3.11.2 Anchorage

Special care shall be exercised by the Contractor near existing platforms and pipelines when running anchor or anchor lines from construction barges and boats. Refer also to Section 3.9.1.4. Before placing any anchors or anchor lines, the Contractor shall clearly define to the Company Representative the proposed location of the anchors or anchor lines and obtain approval in advance prior to deployment at site.

3.11.3 Tolerances

The elevation of each deck and topside module shall be within 75 mm of the elevation specified on the construction drawings. The deck and topside module shall be leveled to a tolerance of 12 mm between any two extreme diagonal points.

3.12 ACCESSORIES

Navigational Aids

The appropriate temporary navigational aids shall be placed on the structure at all times when construction equipment is not alongside the structure. The aids-to-navigational system and such additional aids to navigation as are required to meet applicable government regulations shall be provided, installed and maintained.

The equipment shall be maintained in good operating condition until construction work under this contract is completed. The Contractor shall be responsible for losses or damage and shall replaced and maintain the navigational aids. Temporary navigation aids shall be put in place at the earliest possible time. At no time shall be Contractor leave any portion of the structure without operational warning devices after erection has begun. Permanent aids to navigation shall be left operating at completion of installation of the offshore facility.

3.13 REPAIRS AND CLEAN-UP

All damage to structural items during load out, sea fastening items during load out, sea fastening, transportation and installation shall be repaired to the original condition. All defective welds shall be repaired in accordance with relevant Specification.

All damage to the protective coatings which occur during load out and sea fastening shall be patched and repaired in accordance with Specification 2005 'General Specification for Protective Coatings'.

All installation appurtenances including flood lines, pile guides, trunnions, supports and scaffolding shall be removed upon completion of installation work. All cuts below water shall be made so that 10 mm of steel remains on the permanent member, to avoid damage to the jacket. Above water, cuts shall be made down to 6 mm and the remainder shall be ground smooth to remove any stub.

3.14 POLLUTION CONTRTOL

All operations shall be conducted in a manner that will prevent pollution. All applicable laws, ordinances, rules, regulations and lease or Contract provisions regarding pollution shall be obeyed.

No garbage, trash, waste or other pollutants shall be discharged or allowed to escape, except as allowed by regulating agencies having jurisdiction. At all times the equipment shall be kept orderly and unencumbered from or below deck rubbish or debris. Personnel shall be imparted guidance and training in pollution control and shall clean up any pollution occurring during the installation operations.

3.15 SAFETY

Contractor shall comply with safety instructions, which may be issued by Company or given by Company representative, during offshore work concerning essentially the work being done around oil or gas wells and pipelines. Contractor shall also comply with all local ordinances governing safety and it shall be Contractor's responsibility to determine the content of these regulations.

3.16 VETTING OF PRESERVICE ANALYSIS & INSTALLATION ENGINEERING:

Pile & Conductor Drivability Analysis shall be vetted by Installation Contractor & MWS and approved by Company. Vetting/ Approval of following Pre-Service analysis shall be obtained from MWS and Installation contractor prior to commencement of installation of jacket and pile:

SL No	DESCRIPTION	Jacket	Deck	Module
1	Load-out Analysis	Yes	Yes	Yes
2	Sea-fastening & Transportation Analysis	Yes	Yes	Yes
3	Launching Analysis	Yes	No	No
4	Lifting Analysis	Yes	Yes	Yes

5	Floatation & Upending Analysis	Yes	No	No
6	On-bottom Stability & Mudmat Analysis	Yes	No	No

Jacket installation procedure shall be submitted to the Company at least 10 working days before load out of jacket. Applicable Pre-Service analysis reports such as On-bottom stability and Mudmat Analysis report, etc. shall be in compliance with Jacket installation procedure. All comments of company on pre-service analysis reports shall be submitted to MWS & Installation Contractor for their consideration. Also, comments of MWS and Installation Contractor on pre-service analysis reports shall be submitted to Company.

4.0 AS-BUIT DOCUMENTATION

A. As minimum following Structural Documents shall be documented:

1. Contractor's Structural Design Consultant shall prepare the AS-Built Structural Drawings by incorporating all subsequent design changes approved by Company, marking actual Yield Strength of material in co-relation to Material Traceability & Mill Test Certificate with Listing of Heat Numbers, Name of Mill, Mill TC Numbers, etc.
2. During advance stage of Engineering SACS Model for All Analysis shall be documented.
3. All AFC Drawings, All Structural Analysis and Design Calculations shall be documented.
4. Post completion of work SACS Model Structural Analysis (Inplace, Fatigue & Earthquake) both for Jacket & Deck (top side) shall be updated with all design changes and load-data supported with final Weight control Report.
5. All Structural Material Purchase Orders shall be documented.
6. Structural Analysis Reports (all) and Design Calculations shall be documented.
7. PS for Helideck (Aluminum) & handrails, rubber products, MGP (if applicable), architectural items shall be documented.
8. Structural Steel Material Mill Test Certificates, Material Inspection & traceability Drawings with Reports/records, Dimension control report/Records, Cement Test Certificate, Grout Mix design Report, Grout cube Test Report, Paint Material inspection report with Manufacturer's test Certificate, Painting Records, Paint application Inspection Records, Weld Joint numbering Records with Welding Inspection Reports, fabrication related all procures upto loadout stages, etc., shall be documented as Fabrication /Construction Dossier.
9. Weld joint numbering with Weld Inspection Report & Record.

10. Painting Material Inspection Report with Paint Manufacture's Test Certificate.
11. Paint application & Inspection activity Report with Inspect report.
12. Load-Out activity shall be documented the form of Video for fabricated position to final position on Barge duly witness by ONGC appointed Inspector.
13. Post Installation pile & Conductor Driving records / Reports & Pile monitoring record (as applicable) shall be documented daily immediately after driving of each segment of pile/Conductor.
14. Pre-engineering Survey Report, Pre-construction Survey Report & Post construction survey Reports, Installation barge activity log (during installation period), Installation related all procedures, Installation related Records like Inspection records, As-built video records of various installation stages (under water), As-built video survey of Jacket & Mud-mat, Debris clearance survey report, etc. shall be documented as Installation Dossier.
15. Activities specified elsewhere in the Bid Document but not specified above shall also be documented.
16. All similar data shall be documented for PLEM, SSIV, Mooring Buoy, Bridge & Top side Modules.
17. Report for painting area in deck and jacket, entire deck and jacket handrail length, chequered plate area, total grating area shall be documented.
18. WCR shall include structural steel tonnage for jacket, deck, conductors (if applicable) and pile separately.
19. The Excel and/ or Mathcad spreadsheet files used by the contractor for various design calculations shall be submitted to the company in unlocked editable mode.

B. As minimum following Architectural Documents shall be Documented:

1. Contractor's Architectural Design Consultant shall prepare the As-Built Architectural Drawings by incorporating all subsequent design changes approved by Company.
2. As-Built Documentation for Architectural items shall be carried out similar to items specified for Structural items stated above.
3. As-Built Documentation for Structural items shall be carried out for all Architectural Buildings as stated above.

C. Fabrication / Construction Dossier as As-Built Documentation for structural Fabrication & Installation Dossier shall be carried progressively during fabrication stage till installation so that As-Built documentation is complete with 60 days of Installation. Post completion of Work (Installation) As Built Drawings shall be prepared incorporation of Design changes and other activities specified which shall be approved by ONGC appointed Inspector.

As-Built Documentation activity shall be the DCI Document having following parts as minimum requirement:

Fabrication / Construction Dossier shall have following parts:

- Pre-Engineering Survey reports, Pre-Installation Survey Report, As-Built Video Survey Reports. These documents shall be documented at the end of activity.
- Material Purchase Order. These documents shall be documented weekly and shall be submitted every Monday.
- Material Inspection Report along with Mill Test Certificate with acceptance of Material. These documents shall be documented weekly and shall be submitted every Monday.
- Material Traceability Report with respect to Mill TC. These documents shall be documented weekly and shall be submitted every Monday.
- Dimension Control checks. These documents shall be documented weekly and shall be submitted every Monday.
- Welding Inspection Reports & Records. These documents shall be documented weekly and shall be submitted every Monday.
- Weighing report of jacket & topside in the yard prior to load out.
- Painting material Inspection with Manufacturer's test Certificate.
- Painting Inspection Report & Record.
- Load-out activity shall be document as as-built video.

Installation Dossier shall have following Parts and document daily & as specified elsewhere:

- Inspection of Item post Transportation and before Installation.
- Jacket Leveling & Co-ordinate Report.
- Pile Driving Record & Report
- Conductor Driving Record & Report.
- Transition Piece Elevation & dimension control Record.
- Deck Installation Report & Record.
- Welding Inspection Report & Record.
- Field Painting Record for application Priming Coat, mid coat & Top Coats.

---------- END ---------

Mechanical Functional Specification

WHRU REPLACEMENT PROJECT

VOLUME – IIIA

OIL AND NATURAL GAS CORPORATION LIMITED
INDIA

INDEX

MECHANICAL FUNCTIONAL SPECIFICATION

Sl. No.	FUNCTIONAL SPECIFICATION NUMBER	FUNCTIONAL SPECIFICATION NAME	Rev. No.
1	FS 5002	Equipment Noise Limit	Rev-2
2	FS 5004	Equipment Vibration limits	Rev-2
3	FS 5067	Dry Chemical Skid with Hose Reels	Rev-2
4	FS 5100	Packaged equipment	Rev-4
5	FS 5101	Safety Studies	Rev-3
6	FS 5102	Safety Specification	Rev-4
7	FS 5404	Process Gas Compressor (Gas Turbine Driven)	Rev-5
8	FS 5501	Gas Turbine	Rev-3
9	FS 5601	Unfired Pressure Vessels	Rev-3
10	FS 5701F	Air Cooled Heat Exchanger	Rev-2
11	FS 5702F	Shell & Tube Heat Exchanger	Rev-2
12	FS 5703	Waste Heat Recovery Unit(WHRU)	Rev-2

SPECIFICATION FOR EQUIPMENT NOISE LIMIT

PREPARED / REVISED BY	REVIEWED BY	APPROVED BY	TOTAL No. OF PAGES	DATE	REV.No
RSR	NM	AJ	6	25.09.17	2
T. MITRA	SKG	JSS	6	13.01.05	1

2 **CONTENTS**

1.0 SCOPE

2.0 REFERENCES

3.0 DEFNITION

4.0 NOTATION

5.0 EQUIPEMENT NOISE LIMITS

6.0 INFORMATION TO BE SUBMITTED BY THE VENDOR

1.0 SCOPE

2

This specification gives the maximum allowable noise levels for rotating and reciprocating equipment. e.g. fans, blowers compressors, turbines, gearboxes, electric motors, generators etc. installed in production facilities. The contents of this document pertain specific to acceptable levels of noise for different rotating and reciprocating equipment's, and therefore this document can be used in conjunction with other equipment specification and standards.

2.0 REFERENCES

2

The following codes and standards form a part of this specification. In addition to the compliance to this specification, vendor shall comply with contents of the latest editions of these codes and standards.

(i) The Engineering Equipment and Material Users Association (EEMUA), Publication No 140, "Noise Procedure Specification".

(ii) The Engineering and Materials Users Association (EEMUA), Publication No 141, "Guide to the use of Noise Procedure Specification".

(iii) Department of Energy (UK) "Offshore installation guidance on design and construction" July 1997, Part-II Section 5.9

(iv) Offshore Technology Report 2001/068,UK

3.0 DEFINITIONS

The following definitions apply to this specification

2

Noise Limit	is defined as the overall / maximum permissible sound pressure level.
Sound Pressure level	is defined as 20 Log_{10} (p/p_0) in dB where P is the measured sound pressure is Pa and P_0 is the reference sound pressure of 2 x 10^{-5} Pa.
Sound power level	is defined as 10 Log_{10} (p/p_0) in dB where P is the measured sound power in Watts, and P_0 is the reference sound power of 10^{-12} Watts.

Narrow band noise	when the noise from a source contains a pure tone or narrow band component which is noticeable to the ear as a noise of distinguishable pitch, and which represents a dominant feature of the total source noise, then the source noise shall be regarded as containing narrow band noise for this specification.
Impulsive noise	when a noise contains significant irregularities, such as bangs, clanks or thumps, or if the noise is only existent momentarily and is of a character to attract attention then it shall be considered as impulsive for this specification.
Octave bands	refer to the preferred octave frequency bands given in table 1 below. Eight Octave bands 63Hz to 8 k Hz is adequate.
Overall sound pressure level	is defined as ten times the log of sum of linear sound pressure value of octave band center frequency
Octave Band Centre Frequency	is defined as the preferred center frequency for noise measurement.

4.0 NOTATIONS

2

dB	Decibels
dBA	A-weighted decibel
EEMUA	Engineering Equipment and Material User Association
Hz	Hertz
SPL	Sound Pressure Level
Pa	Pascal's ($N/m^{2)}$

5.0 EQUIPMENT NOISE LIMITS

(i) Basic Sound Pressure Level Limit

2

Basic Sound pressure level limit, unless otherwise specified on the requisition, the following limits shall be met at any measuring location at 1.0 m distance from the equipment surface. The procedure for sound pressure level measurement shall be as per section 2 above.

Table 1: Sound Pressure Level Limit

Octave Band Centre Frequencies (Hz)	63	125	250	500	1k	2k	4k	8k	Overall SPL (dBA)
Sound Pressure Level Limits (dB).	101	94	89	86	83	81	79	78	88

(ii) Additional restriction to basic limit

The level mentioned under Table 1 shall be reduced by the stated amounts for each of the following conditions.

Table 2: Impulse and Narrow band noise reduction (as per publication 140)

Condition	Octave band centre frequency (Hz)							
	63	125	250	500	1k	2k	4k	8k
Impulse Noise (dB)	5	5	5	5	5	5	5	5
Narrow band noise (dB)	0	0	0	4	6	7	7	3

6.0 INFORMATION TO BE SUBMITTED BY THE VENDOR.

2

The vendor shall provide the following information. The noise level mentioned shall relate to the normal operating condition and any other design or expected mode of operation.

(i) For the purpose of measuring work area noise limit, maximum and average sound pressure levels shall be measured at 1m from the equipment surface (in dB and octave band) and at operator's position where applicable. Reading shall be taken at a minimum of four locations equally spaced around the equipment at 1.5 – 2 m above the working floor level. The position of the maximum sound pressure level shall be defined.

(ii) Details of how the information above has been derived. These shall include full information on the noise test such as reading taken, any

corrections applied, measurement position with dimension sketch, test environment and operating condition of the test equipment. If any extrapolation is involved, the same shall be mentioned.

(iii) Any characteristic noise component such as narrow band or impulse noise shall be specified.

(iv) Recommendation for the noise control of the equipment to meet the prescribed noise limit.

(v) The manufacturer shall also indicate which special silencing measures, if any, have been applied to maintain these levels.

(vi) A report containing SPL readings taken at each Octave band center frequency and overall dBA of the equipment after installation at Offshore Platform. Contractor to take suitable measures to ensure noise levels are within specified limit (Refer Table 1) after installation of the equipment at offshore platform. Noise report shall be reviewed by ONGC/ONGC Representative at offshore platform and shall be submitted in the “As built” document. Background noise shall be considered in accordance with EEUMA140/141.

SPECIFICATION

FOR

EQUIPMENT VIBRATION LIMITS

PREPARED / REVISED BY	REVIEWED BY	APPROVED BY	TOTAL No. OF PAGES	DATE	REV. No.
RSR	NM	AJ	12	02.01.18	2
T. MITRA	SKG	JSS	12	13.01.05	1

CONTENTS

2

1.0 SCOPE

2.0 REFERENCED CODES AND STANDARDS

3.0 DEFINITIONS

4.0 GENERAL

5.0 AUXILIARY EQUIPMENT

6.0 ACCEPTANCE TESTING

7.0 PIPING VIBRATIONS

8.0 PROCEDURES, REQUIREMENTS AND INSTRUCTIONS

9.0 CONVERSION INFORMATION

APPENDIX -A

proved

1.0 SCOPE

2 1.1 This Engineering standard provides the acceptable levels of vibration for rotating and reciprocating equipment, including a section limiting mechanically induced vibrations in piping connected thereto and basic requirement for acceptance testing.

This standard may be attached and made a part of individual specifications and drawings or used in conjunction with other equipment specifications and standards. If conflict exists, the specification and / or drawings will govern.

The responsibility for proper interpretation of this standard shall rest upon appointed representatives of the Company. It will be the vendor's responsibility to obtain clarification from the Company's representative, which in all cases shall be final and binding.

2.0 REFERENCED CODES AND STANDARDS

2 2.1 The latest editions of the following codes and standards shall form a part of the specification. In addition to compliance to the contents of this specification, vendor shall comply with contents of the latest editions of these codes and standards as applicable.

ISO-10816-1	Mechanical Vibration – Evaluation of machine vibration by measurements on non-rotating parts. Part 1: General Guidelines.
ISO-10816-3	Mechanical Vibration – Evaluation of machine vibration by measurements on non-rotating parts. Part 3: Industrial Machines with nominal power above 15 kW and nominal speed between 120 RPM and 15000 RPM when measured in situ.
ISO-10816-4	Mechanical Vibration – Evaluation of machine vibration by measurements on non-rotating parts. Part 4: Gas turbine driven sets excluding aircraft derivatives.
ISO-10816-6	Mechanical Vibration – Evaluation of machine vibration by measurements on non-rotating parts.

	Part 6: Reciprocating machines with power ratings above 100 kW.
API 670-	Machinery Protection Systems
ISO 1940 – 1	Mechanical vibration – Balance quality requirement for rigid rotors Part 1: Specification and verification of balance tolerances.
ISO 1940 – 2	Mechanical vibration – Balance quality requirement for rigid rotors. Part 2: Balance errors
API-610	Centrifugal Pumps For Petroleum, Petrochemical and Natural Gas Industries
API-613	Special Purpose Gear Units for Petroleum, Chemical and Gas Industry Services
API-616	Gas Turbines for the Petroleum, Chemical, and Gas Industry Services - Fifth Edition
API-617	Axial and Centrifugal Compressors and Expander-compressors
API-618	Reciprocating Compressors for Petroleum, Chemical and Gas Industry Services
API 676	Positive displacement pumps – Rotary
API 673	Centrifugal Fans for Petroleum, Chemical, and Gas Industry Services.
API 674	Positive displacement pumps - Reciprocating

2.2 It is the vendor's responsibility to invoke all the applicable and latest standards/specifications with the sub-vendors.

proved

3.0 DEFINITIONS

2

For the purposes of this standard the following shall apply:

a) Vibration: The variation of magnitude of a quantity with time which is descriptive of the motion or position of a mechanical system when the magnitude is alternatively greater and smaller than some average value or reference.

b) Amplitude: The maximum value of a quantity with respect to a mean position.

c) Displacement: A vector quantity specifying the change of position of a body or particle with respect to a reference frame. The reference frame is usually a set of axes at a mean position or position of a rest.

d) Velocity: A vector specifying he time derivative of displacement. The reference frame is usually a set of axes at a mean position or position of rest.

e) Acceleration: A vector specifying the time derivative of velocity. The reference frame is usually a set of axes at a mean position or position of a rest.

f) Frequency: The number of cycles of periodic quantity per unit of time, stated in cycles per minute or cycles per second. The cycle per second is hertz (Hz).

g) For the purpose of measurement following units shall be used:
   Vibration Displacement – microns.
   Vibration Velocity – mm/sec.
   Vibration acceleration – ‘g’ i.e. acceleration due to gravity.
   Frequency – in Hertz (Hz).

h) Vibration Analyzer: The equipment which measures vibration amplitude along with frequency / time spectrum.

i) Filtered reading (filter In): Oscillating disturbances that are segregated based on their frequencies with a vibration analyzer.

j) Unfiltered (Filter Out): Oscillating disturbances in the form of electrical signals received by the vibration analyzer that allows all signal to pass without segregating as to their frequency.

k) Cycle: The complete range of states / values through which a periodic phenomenon or function passes before repeating itself identically.

l) Frequency Analysis/Signature Analysis: They represent the filtered vibration on amplitude versus frequency plot where spectrum densities can be analyzed in displacement or velocity mode.

proved

m) Simple Harmonic Motion: A motion that is a sinusoidal function of time.

n) Periodic vibration: Vibrations which repeat itself after a certain time interval.

o) Phase: The fractional part of the period through which a sinusoidal quantity has advanced w.r.t an independent variable as a reference.

p) Resonance: Resonance is the condition where the frequency of the forced oscillation matches with the natural frequency / critical speeds of the system.

q) Critical speed: is the rotational speed at which the rotor-bearing support system is in a state of resonance. A rotor-bearing support system in resonance can have the magnitude of its normal vibration amplified.

r) Seismic pick up: A transducer capable of converting mechanical vibrations into electrical voltages.

s) Frequency Range: Frequency range for the purpose of measurement of vibration shall be broad such that frequency spectrum of the machine is adequately covered.

t) Vibration Magnitude: Measurement result made with an instrument (adhering to clause 4 of ISO 10816 Part 1) is called vibration magnitude at a specific measuring position and direction. When evaluating broad band vibration of rotating machinery, r.m.s value of vibration velocity to be considered.

u) Vibration Severity: Maximum broad band magnitude value measured under machine support and operating condition shall be considered for vibration severity assessment purpose. The measurement will be taken in three mutually perpendicular directions.

v) Measuring Positions: Measurement should be taken on the bearings, bearing support housing or other structural parts which significantly respond to the dynamic forces and characterize the vibration of the machines.

w) Evaluation zone: The following evaluation zones are defined to permit a qualitative assessment of the vibration for a given machine and provide guidelines on possible action.

Zone A: The vibration of new commissioned machines would normally fall within this zone

Zone B: Machine with vibration within this zone normally considered acceptable for unrestricted long term operation.

Zone C: Machine with vibration within this zone normally considered unsatisfactory for long term continuous operation.

Zone D: Machine with vibration within this zone normally considered to be of sufficient severity to cause damage to the machine.

proved

4.0 GENERAL

2

4.1 It shall be the vendors responsibility to bring promptly to purchasers attention any error or discrepancy which are found to exist in this specification.

4.2 The Company's duly authorized agents and/or representatives shall be provided with the following privileges:

a. Free access to those portions of the vendor's facilities utilized in any manner for the construction, fabrication or assembly of the equipment to the tested or inspected under this standard.

b. When required, the right to review any data which may be related to one or all of the following; material selection, fabrication, assembly, balancing or testing of the manufactured equipment. If a unit is found unacceptable and remedial work is required, information related to machining tolerance and balancing certification, limits utilized, or techniques applied may be requested for an "on the spot" review.

c. The right to inspect, tests, and/or witnesses any activities in conjunction with this standard and to reject any work, material or procedure deemed sub-standard.

4.3 The vendor shall be responsible for and assure the Company that vibration levels do not exceed the limits established by this standard as listed in Appendix A under the appropriate tables.

4.4 The vendor shall assume the responsibility for and obtaining of any and all performance warranties on equipment provided to meet this standard.

5.0 AUXILIARY EQUIPMENT

2

5.1 All other mechanical equipment such as skids, vessels, coolers, condensers, refrigeration units and the like shall be designed, fabricated and installed with supports, hangers, pulsation dampeners, etc., as required to prevent excessive vibration to the total system or to individual equipment.

5.2 Vibration limits are specified in Section 7 for piping and/or valve installations that are wholly contained on or with in the physical confines of the skid or base mounted unit(s).

6.0 ACCEPTANCE TESTING

2

6.1 The vendor shall grant the Company's representative permission to enter his facility during final acceptance testing, i.e. performance, mechanical or no load testing, for the purpose of vibration analysis or an equipment being purchase. The company retains the option to carry their own

proved

portable instrument and personnel to analyze the vibration of the equipment being tested.

6.2 A vibration analysis shall be made on all rotating or reciprocating equipment and any connected piping. This analysis may be a requirement within the scope of the mechanical acceptance test if mutually agreed upon by the vendor and the company. The analysis shall be performed on the equipment simulating field operating condition to-the extent possible. Operating conditions at which the vibration analysis is carried out shall be indicated in the test records.

6.3 Basic Requirements for Acceptance Testing

a) The vendor shall notify the company/purchaser at least thirty days prior to a scheduled test unless a different time frame is mutually agreed upon between the vendor and the company.

b) The duration of all tests shall be in accordance with the applicable API code for that specific type of equipment. If no code applies and the company job specifications do not call out testing details, the equipment to be tested shall be operated at rate speed until bearing temperatures and operating conditions are stable, the vibration analysis shall begin at this point in time. Under no circumstances shall minimum time period be less than one half hour for any acceptance test.

c) The vendor shall test the critical or resonant speed, all input and output shaft speeds including those for any intermediate shaft in gear trains, the number of teeth or meshing gears in an interdrive system and any other similar information necessary to identify frequencies during the vibration analysis. This data shall be given to the company or his representative prior to the acceptance and made a part of the test report.

d) The company/purchaser shall have the right to make on the spot interpretations and/or decisions to assure satisfactory equipment performance as well as the validity of the test. The test report shall include all raw data and any interpretations or recommendations that were made by either the vendor or company/purchaser representative. Both the parties shall sign the test reports for their respective equipment.

e) Final or trim balancing of any rotor, gear, shaft or other element requiring a two plane correction shall be governed as follows.

Plane A shall be within 10% of residual unbalance of plane B and vice versa. At no time shall the vendor's standard limits for balancing be exceeded by applying this requirement. The intent is to provide for a more uniformity balanced rotating element thus minimizing the couple within the equipment.

proved

7.0 PIPING VIBRATIONS

2

7.1 Piping vibration caused mainly by the internal flows (pulsations) are not included in the scope of this standard. However, mechanically induced piping vibrations caused by equipment such as those types outlined in section 5.0 are limited as follows.

a. All piping attached to or made apart of the equipment's package shall not exceed the amplitude allowed for the units to which it is connected.

b. Piping external to the equipment base or skid mounting shall be governed by the vibration limits imposed on the unit to which it is connected for a distance of 3 meters or to the first anchored pipe support.

c. Vibrations of general piping beyond the first pipe support shall not exceed 13 mm/sec.

8.0 PROCEDURE, REQUIREMENTS AND INSTRUCTIONS

2

8.1 When evaluating broad band vibration of rotating machinery, the vibration analyzer should be capable of measuring rms vibration velocity.

8.2 The Vibration levels shall be recorded from the horizontal, vertical and axial planes for all accessible bearing location on the equipment and at other positions designated in the specific vibration tables. Where the bearing location is inaccessible, the measurement shall be carried out at nearest possible location. The vibration measurement shall be done with calibrated equipment having valid certificate.

8.3 During the analysis, particular attention shall be given to vibration and frequencies at:

a. Equipment's operating range or design speed and its harmonics (S)

b. Ball pass frequency (roller friction bearing)

c. Vane pass frequency (for centrifugal pumps)

d. Gear mesh frequency (Gear Boxes)

8.4 If measured unfiltered vibration level is less than or equal to 75% of the limit specified in this specification, frequency (signature) analysis of vibration signal need not be carried out. If the measured unfiltered vibration is greater than 75% of the limit specified in this specification, then frequency analysis of vibration signal shall be carried out and plotted on frequency versus peak velocity axis. Ratio of frequencies corresponding to various peaks with respect to the operating speed of the equipment shall be clearly marked and the presence of any frequency which is not an integer multiple of operating speed of the equipment shall be explained and justified.

8.5 Standard forms used when recording vibration levels, frequencies and operating condition shall also require a sketch location the planes of and for the data acquisition. When frequency (Signature) analysis is carried out, the frequency/signature spectrum shall form a part of the test records. The location of measurements, in which plane the measurement is carried out,

rotational speed of the equipment, date and time of the signature plots shall be clearly marked on the signature plot.

8.6 During the vibration data acquisition, operational information such as temperature, pressure, flow rates, loads, intermediates shaft speeds, type of couplings etc, must be recorded just prior to the start of the analysis.

8.7 Measuring instrument shall be as per ISO 2954 – Requirements for instruments for measuring vibration severity.

9.0 CONVERSION INFORMATION

2

9.1 Conversion factors for simple harmonic motion that may be required occasionally are given in the following chart.

Multiply Numerical Value of	By	To Obtain
Average	1.571	Peak
RMS	1.414	Peak
Peak to Peak	0.5	Peak

2

APPENDIX – A

a. Broad band vibration criteria for specific machine group

Class I: Rotating machines of up to 15 kW are typical examples of machine in this category.
Class II: Medium sized machine (typically electrical motors with 15 kW to 75 kW output without special foundation, rigidly mounted engines or machines (up to 300kW) on special foundation.
Class III: Large prime movers and other large machines with rotating masses mounted on rigid and heavy foundation which are relatively stiff in the direction of vibration
Class IV**:** Large prime movers and other large machines with rotating masses mounted on foundations which are soft in the direction of vibration measurement (for example TG sets and GT's with output greater than 10 MW)

Table 1: Typical zone boundary limits (vibration severity)

<table>
<tr><th>Vibration Velocity mm/sec (r.m.s)</th><th>Class I</th><th>Class II</th><th>Class III</th><th>Class IV</th></tr>
<tr><td>0.28</td><td rowspan="3">A</td><td rowspan="4">A</td><td rowspan="5">A</td><td rowspan="7">A</td></tr>
<tr><td>0.45</td></tr>
<tr><td>0.71</td></tr>
<tr><td>1.12</td><td rowspan="2">B</td></tr>
<tr><td>1.8</td><td rowspan="2">B</td></tr>
<tr><td>2.8</td><td rowspan="2">C</td><td rowspan="2">B</td></tr>
<tr><td>4.5</td><td rowspan="2">C</td><td rowspan="2">B</td></tr>
<tr><td>7.1</td><td rowspan="6">D</td><td rowspan="2">C</td></tr>
<tr><td>11.2</td><td rowspan="4">D</td><td rowspan="2">C</td></tr>
<tr><td>18</td><td rowspan="3">D</td></tr>
<tr><td>28</td><td rowspan="2">D</td></tr>
<tr><td>45</td></tr>
</table>

- Vendor to adhere to the latest edition of ISO 10816 for changes in these values
- The evaluation is limited to broad band vibration without reference to frequency components or phase.

proved

b. Reciprocating machines with power rating above 100 kW

Table 4: Vibration classification numbers and guide values for reciprocating machines

Vibration severity grade	Maximum values of overall vibration measured on the machine structure			Machine vibration classification number						
	Displacement µm (r.m.s)	Velocity mm/sec (r.m.s)	Acceleration m/sec2 (r.m.s)	1	2	3	4	5	6	7
1.1	≤ 17.8	≤ 1.12	≤ 1.76	A/B	A/B	A/B	A/B	A/B	A/B	A/B
1.8	≤ 28.3	≤ 1.78	≤ 2.79							
2.8	≤ 44.8	≤ 2.82	≤ 4.42							
4.5	≤ 71	≤ 4.46	≤ 7.01							
7.1	≤ 113	≤ 7.07	≤ 11.1	C						
11	≤ 178	≤ 11.2	≤ 17.6	D	C					
18	≤ 283	≤ 17.8	≤ 27.9		D	C				
28	≤ 448	≤ 28.2	≤ 44.2			D	C			
45	≤ 710	≤ 44.6	≤ 70.1				D	C		
71	≤ 1125	≤ 70.7	≤ 111					D	C	
112	≤ 1784	≤ 112	≤ 176						D	C
180	> 1784	> 112	> 176							D

- A reciprocating machine will be classified depending upon its type, application, size, configuration, flexible or rigid mounting and speed.
- Vendor to follow the latest version of ISO 10816-6 to ascertain the classification.

FUNCTIONAL SPECIFICATION

FOR

"DRY CHEMICAL SKID WITH HOSE REELS"

Prepared / Revised By	Reviewed By	Approved By	Total No. of Pages	Date	Rev. No.
NG	VBD	PKM	10	05.12.2011	2
SPP	VBD	JSS	10	12.09.2007	1
AKM	APE	PKM	13	27-08-2001	0

CONTENTS

SECTION	DESCRIPTION
1.0	SCOPE
2.0	APPLICABLE CODES & STANDARDS
3.0	SCOPE OF SUPPLY
4.0	FUNCTIONAL DESCRIPTION
5.0	DESIGN AND CONSTRUCTION
6.0	INSPECTION & TESTING
7.0	SPARES AND SPECIAL TOOLS
8.0	DATA TO BE FURNISHED BY VENDOR
9.0	WARRANTY

1.0 SCOPE

This specification defines the functional requirements for design, manufacture, testing and supply of a Dry Chemical Skid with hose reel for installation and operation on an off-shore platform.

The system shall provide dry chemical type fire protection system on the offshore platform decks.

The vendor shall submit full technical details of his standard equipment.

Contractor shall not commence manufacturing /purchasing of the equipment and materials until required drawing(s) and data sheet(s) have been submitted by contractor and approved by the company.

2.0 APPLICABLE CODES, STANDARDS AND REGULATIONS

As a minimum, all equipment supplied as part of this package shall be designed, manufactured and delivered in accordance with the relevant sections of the national/international Codes, Standards and Regulations listed below

2.1 Codes and Standards

The following codes and standards (latest editions) are referenced to and made part of this specification:

NFPA 17 - Standard for Dry Chemical Extinguishing Systems

UL - Under writer's Laboratory

ASME, Section VIII, Division-1: ASME Boiler and Pressure Vessels Code

2.2 General Specifications:

Following general specifications as minimum will govern the design of the Dry Chemical Extinguishing Systems

Vol II sec. 3.7 - Design Criteria –Mechanical, safety and lifesaving equipment

Vol II sec. 3.1-Design Criteria – General for Site Conditions and climate

Vol II sec. 3.6- Design Criteria – Instrumentation

5601 - Functional specification for unfired pressure vessel
2005 - Protective Coating

3.0 SCOPE OF SUPPLY

The Vendor shall supply all equipment as described hereinafter to make a complete and operable unit. The dry chemical skid shall include but not be limited to the following:

- Nitrogen System
- Chemical Storage Vessel
- Initial Nitrogen and Chemical Charge
- Actuator System
- Hose reel(s) with nozzle (s)
- Necessary piping/instrument within skid battery limits as per P & ID.
- Extra fill of dry chemical powder, nitrogen cylinder with valve and nitrogen cartridge for 100% stand by for each unit.

All the above components shall be mounted on a common structural skid, fully assembled, piped with outlet piping terminated at the skid edge for appropriate hook-up of close coupled hose reel, wired, tested and painted for marine environment.

4.0 FUNCTIONAL DESCRIPTION

The package shall be delivered in the minimum number of assemblies. Each assembly shall be tested and pre-commissioned in accordance with the requirement as applicable in this document. The Contractor shall supply all equipment to make a complete and operable unit.

4.1 Operating Conditions.

The package shall be installed at an offshore platform with the operating conditions as mentioned elsewhere in the bid package.

4.2 Technical Integrity

The Contractor is responsible for his technical integrity of this package including design, materials, manufacture, assembly, testing, performance and specified services.

4.3 Design Availability/Reliability

The design life and the overall availability of the whole package shall be indicated by supplier.

4.4 Acceptance Criteria

The final acceptance criteria for this package shall be in accordance with the applicable Codes/Standards and as minimum requirement, the offered equipment or equipment of similar design manufactured by the same supplier shall have:

-Type tested and UL listed skid / UL listed components.

- Satisfactory (continuous) service for minimum two years in offshore locations.

4.5 **Operating and Maintenance philosophy**

Full details of the operating design life of all major components which will be subjected to planned maintenance/ replacement during the life of the package, shall be provided by the Supplier.

4.6 **Safety**

It is the intent of the Company that operational hazards be reduced to a minimum. Vendor shall use sound engineering judgment to complete an installation that will perform the required function without compromising this aim.

Adequate protective devices shall be provided to prevent accidental discharge or activation of the system.

4.7 The supplier and his sub-supplier shall operate a quality system satisfying the applicable provisions of NFPA-17, ASME, BS 5750/ISO 9000(Series) latest edition.

A detailed quality plan shall be provided during detail engineering for company's approval.

5.0 DESIGN AND CONSTRUCTION

5.1 Dry Chemical Skid

5.1.1 The system shall be designed in accordance with NFPA No.17, and the requirements listed herein.

5.1.2 The unit shall have a charge of dry chemical powder, nitrogen cylinders, actuators, selector valves, piping and valves, remotely located close coupled hose assembly and associated controls. The unit shall be completely assembled and ready for operation after installation on the platform deck and hook up with the remote hose assemblies.

5.1.3 The dry chemical container shall be fabricated steel vessel constructed and tested in accordance with ASME, Section VIII, Division I and functional specification of unfired pressure vessel – 5601. All vessels shall be ASME Code stamped. A fill cap and relief valve shall be provided.

5.1.4 The dry chemical shall be high grade, non-caking, potassium bicarbonate base and shall be compatible with Aqueous Film Forming Foam (AFFF).

5.1.5 A dual actuation (manual/pneumatic) control system shall be provided for the skid. The system shall be actuated locally or remotely from the close coupled hose reel assemblies. Pneumatic actuation system shall utilize nitrogen filled cartridges (supplied by the Vendor).

5.1.6 The Vendor shall supply nitrogen cylinders with UL listed quick opening valves, regulators, test valves, Nitrogen Cylinder, pressure gauges etc. and other necessary valves and fittings. All valves shall be UL listed for the intended use, particularly with regard to flow capacity and operation. Selector valves shall be of the quick-opening type, allowing essential free passage of the dry chemical. Pressure Relief valves shall be ASME Code Stamped. The initial nitrogen charge shall have a moisture content of less than 0.01 percent by weight, which corresponds to a dew point of -34.5 Deg C (-30 Deg F).

5.1.7 All the operating devices shall be UL listed for intended use and shall be designed for the service they will encounter and shall not be readily rendered inoperative or susceptible to accidental operation.

5.1.8 Vendor to submit the system characteristics such as flow rate, pipe size, area, or volume protected by each nozzle, nozzle pressure, and pressure drop computing, with the use of equations, graphs, or tables, for engineered system, This information is not required for UL listed pre-engineered systems since these systems must be installed in accordance with their pretested limitations described in the manufacturer's installation manual.

5.1.9 The proposed system shall have the capability of nitrogen cylinders and cartridges being recharged on the platform and from indigenous sources.

5.1.10 A spreader bar with lifting eyes shall be provided to facilitate loading and unloading. Each skid shall have extra nitrogen cylinders and cartridge of 100% spare capacity located within the skid.

5.1.11 Weather hood shall be provided to cover and protect the nitrogen cylinder valves, gauges and quick opening mechanism from rain. A suitable nozzle holder to be provided on the hose reel to keep the nozzle when not in use.

5.1.12 The bursting disc assembly is required in the system to ensure proper fluidization of the dry chemical prior to discharge. The bursting disc assembly is located at the outlet in discharge pipe and of corrosion resistant nickel alloy steel.

5.2 Hose Reel Assembly

5.2.1 The Vendor shall supply remotely located/close coupled hose reel assembly for each system. The remote hose reels and nozzles shall be mounted on stands.

5.2.2 The hoses shall be non-collapsible type, length and size as mentioned in the data sheet to be furnished by vendor, and an all-weather neoprene covering conforming to NFPA

requirements. Hoses shall be mounted on convenient manual rewind metal reels. Hoses shall be UL listed for their intended use. Hose shall conform to the requirements of UL 92. Vendor shall specify the burst pressure for Company's review.

5.2.3 Remotely located/ close coupled hose reel activation shall be by nitrogen cartridge and actuator. The supply of actuator tubing, valves, fittings, cartridge, actuator and controls shall be Vendor's responsibility. Interconnecting dry chemical piping and activation tubing between remote hose reel assemblies and the dry chemical skid shall be carried out by the contractor.

5.2.4 Nozzles shall be push-lever type with a pull-pin designed for dry chemical service and shall be UL listed for their intended use and shall be permanently marked for identification. Discharge nozzles shall be provided with blow-off caps or other suitable devices or materials to prevent the entrance of moisture or other environmental materials into the piping. The protective device shall blow off, open, or blow out upon agent discharge. Lever action and pull weights shall be as per NFPA ~~No.~~ 17. The nozzle shall produce a semi-diffused low recoil pattern with an effective range of not less than 8.2 meter (25 feet).

5.2.5 Pipe sizes and nozzles shall be selected, on the basis of calculations, to deliver the required dry chemical flow rate at each nozzle. Equations, or graphs derived therefrom, shall be used to determine the pressure drop in the pipeline in engineered systems. This design information shall be based on tests performed by the manufacturer and shall be confirmed by a testing laboratory.

5.2.6 All discharge nozzles shall be designed and subsequently located, installed, and protected so that they are not subject to mechanical, environmental, or other conditions that could render them inoperative.

5.2.7 Discharge nozzles shall be connected and supported so that they will not be readily put out of alignment. Where nozzles are connected directly to flexible hose, they shall be provided with mounting brackets or fixtures to ensure that they can be aligned properly and that the alignment will be maintained.

5.2.8 Dry chemical systems shall be provided with an indicator to show that the system is in a ready condition or is in need of recharging.

5.2.9 Skid

The skid shall be designed and built to ensure that all the equipment along with accessories, panel and piping are mounted suitably for convenient operation.

5.2.10 Piping

The selection, fabrication and installation of piping works shall meet the minimum requirements defined in Project Specifications for piping design, piping fabrication & installation and other relevant specification. However, all materials and fittings shall be

suitable for dry chemical service. The dry chemical piping for connecting remote hose reel assemblies to the dry chemical skid shall be provided by the contractor. The dry chemical equipment supplier shall provide recommendations for the proper design of the interconnecting piping systems including materials, piping configuration layout and hydraulic calculations. However, vendor shall supply necessary reducers required to connect the contractor's piping with the equipment nozzles.

5.2.11 Instrumentation

Instrumentation shall be as a minimum, that shown on the P&ID, instrument data sheet, and the instrument hook-up drawings appearing elsewhere in the bid package. Any other instrumentation required for proper operation or safety shall be furnished by the Vendor.

The selection and installation of instrumentation works shall meet the minimum requirements defined in Project Specification for instruments and controls.

5.2.12 Protective Coating

All carbon steel surfaces, piping, vessels, supports and structural steel skid shall be coated in accordance with Functional Specification for protective coating

6.0 Inspection & Testing:

6.1 Vendor shall carryout various tests as per applicable Codes / Standards. Tests Certificates shall be submitted for Company's review

6.2 Company/its authorized representative or certifying agency shall have access to inspect the equipment at any stage during manufacture. During inspection, material certificates, shop test data, certificates for bought out components and other relevant information shall be furnished for company's perusal so as to ascertain that the specifications and quality are complied with.

6.3 The completed system shall be tested by company approved Certifying agency. The tests shall determine that the system has been properly installed and will function as intended. Only listed equipment and devices shall be used in these systems.

6.4 Acceptance tests shall include a discharge of dry chemical in sufficient amounts to verify that the system is properly installed and functional. The method of verification shall be acceptable to the authority having jurisdiction. Where pressure testing is required, it shall be by means of a dry gas. The labeling of devices with proper designations and instructions shall be checked.

6.5 The installer shall certify that the installation has been made in accordance with the approved plans and the listing of a testing laboratory.

7.0 SPARES PARTS AND TOOLS:

7.1 Spares

The overall maintenance philosophy of platform / facility is to keep the onboard maintenance as low as reasonably practical and minimize equipment downtime.

Contractor shall prepare recommended spare parts list required for start-up, commissioning and one year's normal operation for dry chemical skid with hose reel and the same shall be furnished with the offer. While preparing recommended spare parts list, the contractor shall follow the equipment manufacturer's recommendations and shall indicate long lead items and available shelf replacement parts.

Contractor shall supply spares for commissioning and start up along with dry chemical skid.

All spare parts furnished by the Contractor shall be wrapped and packaged to preserve the parts as in original condition. The same parts shall be appropriately tagged using stainless steel tags and coded so that later identification as to their intended equipment usage will be facilitated. All items supplied shall be packaged separately and clearly marked as "Spare Parts" and shipped with the equipment in accordance with Instruction from the Company. Packing lists shall be furnished complete and in detail so that parts can be handled without uncrating, should this be required.

Recommended spares should take into account related factors of equipment reliability, effect of equipment down-time upon production and safety, cost of parts and availability of equipment service facilities

7.2 **Special Tools**

With its offer, the vendor shall provide a list of any special tools required for the erection and maintenance of the dry chemical skid system.

The vendor shall furnish one (1) sets of special tools. If the skid is more than one in such case two sets of special tools to be provided.

Prior to shipment each special tool shall be tagged with stainless steel tag detailing its description and where it is to be used

8.0 DATA TO BE FURNISHED BY VENDOR

Sl. No.	Description	With Proposal	After Order Placement	
			For Company Approval / Review	With Equipment Data Book
1	2	3	4	5
A. FOR COMPOSITE UNIT				
1	Equipment Specifications/ Catalogues	X	-	-
2	P&ID of the System	X	X	X
3	Outline of skid with weight	X	X	X
4	GAD and piping layout of skid	-	X	X
5	Nitrogen cylinder sizing criteria	X	X	X
6	Instrument Specification/Catalogues	X	X	X
7	Specification of Valves/piping	X	X	X
B. FOR DRY CHEMICAL TANK VESSEL				
1	**2**	**3**	**4**	**5**
1	Mech. design calculations	-	X	-
2	Fabrication drg. with material specs. showing all the main welds, nozzles, manholes, internals & accessories.	-	-	X
3	Welding procedure & qualification records	-	*	-
4	Material test certificates	-	*	-
5	Radiographic test reports	-	*	-
6	Hydrostatic Test reports and Code test certificates	-	*	X
C. GENERAL				
1	Test Certificates/approval authority certificates	-	*	X
2	Deviation list	X	-	-
3	Reference list of previous installation	X	-	X
4	Spare parts of 1 year (list)	X	X	X
5	Operation, Installation & Maintenance Manual and Spare Parts Catalogue	-	-	X-
6	Other Data for General Specification	-	-	X

X	**-**	**Means Data Required**
*****	**-**	**Means Requirement at Inspection Stage**

9.0 Warranty

Vendor shall have final and total responsibility for the design and performance of all equipment furnished by him. Vendor shall warrant that the equipment furnished by him and the performance of the said equipment is in accordance with this specification and general codes.

Vendor shall warrant and guarantee that all the materials and equipments incorporated in the entire equipment under his Scope shall be new, and all work shall be of good quality.

Vendor shall also be responsible for all system and detailed designing, the aspects of which may not have been covered in this specification as regards the workmanship, performance etc., of the equipment supplied by him.

Vendor shall, upon notice from Company, make good at his own expense all defects found during the warranty period expeditiously.

Vendor shall, if required, supply the services of an experienced engineer to supervise the correction of any defects found during the warranty period.

Vendor shall also warrant and guarantee all work, materials and equipment furnished by any Sub-Vendor and which is incorporated in the Package.

DATA SHEET FOR DRY CHEMICAL POWDER SKID WITH HOSE REELS

Sl . No.	Project: Client:	ONGC
	Location:	
	No. of Working and Standby:	
	Equipment Title	Dry Chemical Skid
	Quantity Required	
	Tag Number	
	Capacity	
	Number of close coupled hose reel assemblies	
	Corrosion allowance for Dry Chemical Container	3mm
	Code	NFPA 17
	Reference P&ID	
	Manufacture's Data	
	Design Code for Dry Chemical Container	ASME Section VIII, Div. I, FS 5601F
	Model No.	
	Discharge Nozzle as per NFPA-17	Yes
	Effective Range, m	
	Flow rate, kg/sec	
	Discharge Time, sec	Minimum as per NFPA 17
	Capacity of the Nitrogen Cylinder	
	Hose length (30 meters (minimum)) and Inside diameter	
	Dry Chemical Container	ASME 'U' stamp
	• Operating Pressure, Kg/cm2	
	• Design Pressure, Kg/cm2	
	Burst Pressure of Hose	
	Pressure Relief Valve (Code stamped)	ASME 'U' stamp
	UL Listing	
	• UL Listing of ~~Parts,~~ components of Dry chemical skid/ skid	
	• Hose and Hose reel	
	• Nitrogen cylinder	
	• Quick Opening Valve	
	• Actuator System	
	• Dry Chemical Powder	
	Overall dimension of the skid (LXWXH), mm	
	Overall weight of skid (Empty, Full), Kg	
	Noise Level, Db	

Notes:

1) **The location and length of hose reel shall be sufficient to cover -the farthest points within the deck.**
2) **The DCP shall be located in a safe and easily approachable area.**
3) **The dry chemical used in DCP skid shall be high grade, non-caking, potassium bicarbonate base and shall be compatible with AFFF type foams.**
4) **Extra fill of Dry chemical powder, nitrogen cylinder with valve and nitrogen pilot cylinder shall be supplied to each unit as 100% standby. The standby nitrogen cylinder for each DCP skid shall be supplied with separate stand and shall be stored near DCP skid.**
5) **Vendor to provide earthing Boss (minimum 2 nos. on each skid)**

FUNCTIONAL SPECIFICATION

FOR

PACKAGED EQUIPMENT

PREPARED / REVISED BY	REVIEWED BY	APPROVED BY	TOTAL NO. OF PAGES	DATE	Rev. No.
MS	BKC	PK	22	10.02.2022	4
BKC	NM	AJ	20	26.03.2019	3
BKC	NM	AJ	25	12.02.2018	2
AKM	SKG	JSS	27	07.02.2005	1

CONTENTS

Sl. No.	DESCRIPTION
1.0	**INTRODUCTION**
1.1	General
1.2	Availability and proven equipment
1.3	Contractor's Responsibility
2.0	**CODES AND STANDARDS**
2.1	Codes, Standards and Regulations
2.2	Project Specifications
2.3	Mandatory Indian Statutory Requirements
2.4	Acceptance Criteria
3.0	**SCOPE OF SUPPLY**
3.1	General Scope of a Package
4.0	**GENERAL REQUIREMENTS**
4.1	Company's Requirements
4.2	Dimensions
4.3	Area Classification
5.0	**DESIGN REQUIREMENTS**
5.1	General
5.2	Design Loads
5.3	Safety
5.4	Materials
5.5	Base Plates
5.6	Ancillary Structures
5.7	Piping, Valves and Fittings
5.8	Piping Supports
5.9	Instrumentation
5.10	Electrical
5.11	Fasteners
5.12	Insulation
5.13	Passive Fire Protection
5.14	Name Plates
6.0	**FABRICATION AND ASSEMBLY**
6.1	General

6.2 Welding
6.3 Assembly

7.0 **INSPECTION, TESTING AND CERTIFICATION**
7.1 General
7.2 Inspections
7.3 Hydrostatic Tests
7.4 Equipment Performance Tests
7.5 Assembled Package Testing
7.6 Certification Requirement

8.0 **PAINTING AND PREPARATION FOR SHIPMENT**
8.1 Painting and Protective Coating
8.2 Preparation for Shipment
8.3 Lifting Equipment
8.4 Items Shipped Loose

1.0 INTRODUCTION

1.1 General

This specification covers the minimum requirements needed for the design, construction, supply, inspection, testing and shipment of Packaged Equipment for offshore platform (Process / Wellhead). The Contractor shall supply the equipment specified for the package, associated auxiliary systems and any other requirements in accordance with this Specification. Any equipment that is necessary to make a complete, operable, safe and dependable package but not specifically identified herein shall also be in the Contractor's scope of supply.

1.2 Availability and Proven Equipment

Only proven package with demonstrated operating experience will be acceptable.

Equipment shall be designed and constructed for continuous operation and outdoor installation. The vendor shall confirm and submit undertaking of minimum availability of 95% for the package.

1.3 Contractor's / Vendor's Responsibility

To minimize the allocation of interface responsibility, the Contractor shall endeavor to group equipment into in Packages and purchase from single point Suppliers.

Contractors shall guarantee the performance of packages for specified duties over the specified range of operating conditions. Contractors shall guarantee adequate power margins have been allowed over the maximum load condition.

This Specification does not dictate detailed design of the equipment or assembly of components. It is intended that those responsibilities be fully retained by the Contractor so that all equipment and process warranties remain unmitigated. The Contractor shall provide a written process / mechanical guarantee for each package.

The Contractor shall be responsible for the complete process, mechanical, structural, electrical and instrumentation engineering and design of the packaged equipment. The Contractor shall also be responsible for the selection and coordination of supply of materials, fabrication, manufacture, assembly, testing, certification, preparation for shipment, delivery of the equipment, supply of drawings and data, all sub-contractor coordination and guarantees as required, notwithstanding any omissions from this Specification.

2.0 CODES AND STANDARDS

2.1 Codes, Standards and Regulations

The packaged equipment covered by this Specification shall be designed, manufactured and tested in accordance with the requirements of this Specification, the referenced Equipment Specifications and Company approved Data Sheets and the following latest edition of Codes and Standards (as applicable):

OSHA 3124	Stairways and Ladders - A Guide to OSHA Rules
AISC 325	Steel Construction Manual
API RP2A-WSD	Planning, Designing, and Constructing Fixed Offshore Platforms—Working Stress Design
API-RP-14C	Analysis, Design, Installation, and Testing of Safety Systems for Offshore Production Facilities
API RP 500	Recommended Practice for Classification of Locations for Electrical Installations at Petroleum Facilities Classified as Class I, Division 1 and Division 2
ASME B16.5	Pipe Flanges and Flanged Fittings NPS ½ Through NPS 24 Metric/Inch Standard
ASME B31.3	Process Piping
ASME BPVC-VIII-1	SECTION VIII - RULES FOR CONSTRUCTION OF PRESSURE VESSELS DIVISION 1
ASME BPVC-VIII-2	SECTION VIII - RULES FOR CONSTRUCTION OF PRESSURE VESSELS DIVISION 2 - ALTERNATIVE RULES
ASME BPVC-IX	SECTION IX - WELDING, BRAZING, AND FUSING PROCEDURES; WELDERS; BRAZERS; AND WELDING, BRAZING AND FUSING OPERATORS
ASTM A36/A36A	Standard Specification for Carbon Structural Steel
NACE MR0175	Petroleum, petrochemical, and natural gas industries - Materials for use in H2S-containing environments in oil and gas production

2.2 Reference Specifications

Packages shall be designed, manufactured and tested in accordance with the individual equipment Functional specification and following ONGC Functional Specifications (FS):

SPEC NO	Description
Vol II	Design Criteria – Mechanical, Safety and Life Saving Equipment (Process Platform)/(Well Platform)
5002	Specification for Equipment Noise Limit
5004	Specification for Equipment Vibration Limits
5601	Functional specification for Unfired Pressure Vessels
VOL II	Electrical Design Criteria
4017	Functional Specification for Electrical Equipment of Packaged Plant
Vol II	Piping Design Criteria
2004-A	Functional Specification for Piping Design
2004-B	Functional Specification for Piping Fabrication and Installation
2004-D	Piping Specialities
2006	Functional Specification for Insulation of Piping & Equipment
2009F	Functional Specification for Welding and NDT
Vol-II	Instrumentation Design Criteria
3503	Instrumentation for Eqpt Package
2005	Specification for Protective Coating
Vol-II	Structure Design Criteria
6001F	GENERAL SPECIFICATION FOR MATERIAL, FABRICATION AND INSTALLATION OF STRUCTURE

2.3 Mandatory Indian Statutory Requirements

This document has been prepared to the International Standards detailed within. The EPC Contractor shall ensure that the Scope of Work is executed in accordance with all mandatory Indian Statutory requirements.

2.4 Acceptance Criteria

The Contractor shall confirm that the contractor has supplied at least two units similar to offered equipment, and at least one such unit has given continuous satisfactory service in an offshore environment for at least two years The supplier shall have produced two units of comparable type, rating and design from the proposed manufacturing plant.

In cases where other criteria are specified in Functional Specifications, the latter shall take precedence.

The acceptance criteria is minimum and the same to be read in conjunction with the acceptance criteria for individual specification.

3.0 SCOPE OF SUPPLY

3.1 General Scope of a Package

The scope of supply for the packaged equipment shall include, but not be limited to, the following:

- The equipment to be packaged, as shown (where applicable) on P & IDs
- Structure base (drain rim type) with lifting lugs
- On-base piping, including supports.
- Valves including any shut down valves.
- The necessary alarms, shut down devices, status indicators as shown within the “Package” limits, Specifications and Data Sheets shall be provided for each piece of equipment in the package and installed on control panels.
- Instrumentation
- Electrical junction boxes
- All on-base electrical and instrumentation bulks including as a minimum cable, tray, tubing, fittings and supports
- Any necessary integral handling facilities (e.g. Monorails, Chain Pulley Block, Hooks for Block, etc.)
- Certified lifting tackle (Spreader Beam, Slings and Shackles, etc.)
- Any necessary packaging and nozzle protection
- Documentation

4.0 GENERAL REQUIREMENTS

4.1 Company’s Requirements

The vendor's standard designs shall meet the performance requirements and shall be designed for outdoor location, suited to corrosive salt laden, marine environment.

The Vendor /Contractor shall identify any aspects of the standard components of packages that don't meet this specification and submit descriptions to the Company during detailed engineering stage for company's review and approval.

Requests for substitutions of any kind shall be complete with all pertinent engineering information required for the Company's evaluation of the proposed substitution.

Packaged equipment outline drawings and/or data sheet sketches submitted by the Company to the Contractor are not intended to cover complete details. The Contractor shall make detailed calculations for the design of the pressurized packaged equipment and shall prepare detailed shop drawings.

The Contractor shall provide to the Company all fabrication drawings, weld procedures and detailed calculations for approval. Shop work shall not start until the Contractor has received drawings and weld procedures approved by the Company. No subsequent revision may be issued to the fabrication shop unless the Company approves it. Weld procedures shall be accompanied by a weld procedure index and weld maps.

Prior to delivery, the Contractor shall provide the necessary data required for structural static and dynamic analysis of the loads on the platform deck. This information shall include:

- Base weight, support points and center of mass
- Operating speeds for all pieces of rotating equipment
- Operating rotational imbalance forces
- Shut down imbalance forces
- Weight of the heaviest single component required to be lifted during maintenance operations.

4.2 Dimensions

All dimensions shall be in metric units.

All detail drawings shall be fully dimensioned and complete with a bills of materials.

All packaged equipment connections, internals, etc. shall be located with respect to the datum or reference lines.

4.3 Area Classification

Electrical and instrumentation components of the packaged equipment will be suitable for the applicable Hazardous Area classification according to Electrical and Instrumentation design criteria enclosed in the tender.

5.0 DESIGN REQUIREMENTS

5.1 General

Packages shall be designed for installation on offshore platforms and must be able to operate in a highly saline corrosive atmosphere in conditions of high relative humidity.

The package assembly shall be designed for high reliability and minimum down time.

Cabling piping or instrument tubing shall be routed within the base limits.

Equipment shall be located within the package so as to afford easy access for operation, maintenance and personnel safety.

No part of the equipment shall overhang the boundaries of the base.

The equipment shall comply with the requirements of API RP 14C. A full analysis report shall be provided by the Contractor with its quotation.

The packaged unit shall be delivered complete and ready for operation.

Equipment shall be oriented on the bases to allow adequate space for ease of access during maintenance operations. Designs shall ensure all drains, vents, filling & adjusting points are readily accessible and that no major disassembly of components is required when carrying out routine maintenance activity.

5.2 Design Loads

The structural design of the base shall allow for:

- the equipment to be installed and operated on the base;
- the design wind load;
- seismic loads;

▪ any hydrostatic test loads;

▪ external pipe loads at tie in points;

▪ handling (lifting), shipping and installation loads; shipment could include transport over unsealed roads and will incur shock loads.

The base, piping and equipment shall be designed to withstand transport loads as follows:

Horizontal	-	0.7 g (6.9 m/s^2) from any direction.
Vertical	-	1.0 $\pm$ 0.2 g (9.8 m/s^2)

▪ Additional loads for fireproofing.

▪ Wind pressure, seismic loading and stress analysis shall be computed in accordance with stated codes and standards detailed by applicable Equipment Specifications.

5.3 Safety

Flywheels, sheaves, belts, shafts, couplings and similar hazards shall have removable safety guards. Safety guards shall protect to within 15 mm of stationary housings and shall be sufficiently rigid to withstand deflection and prevent rubbing as a result of bodily contact force equivalent to 100kg.

Construction of guards protecting rotating parts shall be from non-sparking materials. The use of aluminum materials is not acceptable.

Personnel protection against accidental contact with hot surface shall be provided. The minimum requirement to be met is API RP 14E

Handrails shall be provided on both sides of walkways, stairs and platforms.

Noise emitted by packages shall not exceed the limits defined in spec. 5002.

5.4 Materials

The Contractor shall propose appropriate materials, based on the Materials Requirement as per bid specifications. The Contractor may propose equivalent or superior alternatives if, based on their experience, these would render equal or better service.

Materials shall be appropriate for corrosive nature of operating environment and fluid being handled and be selected based on previous experience with similar items of Equipment operating in similar conditions.

Materials and components shall be new and unused, free from defects, shall comply with International Standards and shall be appropriate for their intended purpose.

Asbestos materials or asbestos based products shall not be used.

5.5 Base Frame / Foundation Skid

Base Frame / Foundation Skid of Equipment / Package shall be heavy duty suitable for offshore installation and designed in full accordance with sound structural engineering principles and the American Institute of Steel Construction (AISC) or equivalent international standards.

Bases shall be of all welded construction. Welds runs shall be continuous and joints fully seal welded.

Base frames / skids shall be designed to resist, without misalignment of component parts, normal thermal or mechanical loads as might be imposed on the equipment / package during installation and normal operation. Where applicable a system to accommodate thermal expansion and contraction shall be provided within the base frame.

The primary beams (longitudinal base members) of the frame / skid shall be suitably supported by platform deck structural beams. The maximum allowable deflection of any primary beam shall be 1/300 of the span between supports under conditions of dead, plus superimposed loads. Base frame / skid shall be sufficiently rigid to be mounted without grouting.

Cross members of the frame / skid shall be designed and sized such that the top faces are in line and flush with the top faces of the primary beams, whilst the lower faces shall be such so as to give a minimum of 40 mm ground clearance.

The spacing of cross member shall not exceed the maximum allowable under AISC specification.

The primary members of the frame / skid shall be adequately cross-braced to prevent flexing or distortion of the base during transportation and installation. Equipment mounted on the base shall not be considered as contributing to the structural strength or bracing of the base.

The underside of base frames / skids shall be left flat to provide a continuous bearing surface and bolt holes or bearing pads shall only be provided where specified by Data Sheets.

Base frames / skids shall be capable of being lifted, as a “single point lift”, without causing deflections which would result in permanent deformation of the base or otherwise damage any of the equipment enclosed. If a single point lift is not achievable, then the Contractor shall provide a spreader frame.

For lifting, pad-eye type lifting lugs shall be welded to the base using full penetration welds. Lifting lugs shall be designed for a minimum load factor of 2.0 without increase in permissible stresses, on the calculated force and for all sling angles between 45 and 75 degrees to the horizontal, as obtained from a single point lift. Lifting lugs shall be (100%) MPI tested to ensure the soundness and integrity of the affixing weld. Packager / vendor shall ensure that the detailed stress analysis has been carried out.

Where alignment of machinery is critical, the Contractor shall propose a point mounted base, using bearing pads, as an alternative to his standard. The position of the support parts shall be agreed with the Company. Where required, machinery shall have suitable anti-vibration mounts provided between the machine and the base.

Bases will normally be fixed to platform deck by seal welding. Wherever Anchor bolts are used, the Anchor bolts shall be a minimum of 20 mm in diameter and shall be located at cross member junction points. The maximum span between Anchor bolts shall not exceed 900 mm.

The holes for hold-down bolt wherever used within the package shall be sized and located to eliminate bolt binding interference during field alignment.

Axial and lateral Jacking screws of robust design and construction shall be provided on all bases supporting heavy machinery in order to facilitate lateral and axial movement of each equipment/ item during alignment, regardless of component weight. The number of jackscrews per equipment item shall total eight (8). All Jackscrews shall be manufactured in stainless steel materials.

All other types of bases should be reviewed against the calculated or known deflection of the platform deck and the exciting forces.

Bases shall be provided with two earthing bosses welded to opposite ends of each base frame.

5.6 Ancillary Structures

All ancillary support structures shall be designed so as to withstand all superimposed loads including wind load in accordance with AISC standards.

Access ways, handrails and ladders shall conform to the requirements of OSHA 3124 and shall be provided for operating and maintenance to all instruments, controls and valves (handles) where located more than 2.0 m above the base floor.

All access platforms and walkways shall have a clear minimum width of 1 m and no piping, instrumentation or cable runs shall impinge on this.

All piping and cabling shall be suitable supported for service and shipment. The support and installation shall be designed to allow for piping and cabling to be removed without the cutting of structural members.

Where filter units with removable heads and/or internal element form part of the package equipment, permanent handling facilities shall be provided on the package for removal of head /elements. This requirement applies when the weight of any single component exceeds 25 kg or where easy access is not available.

5.7 Piping, Valves and Fittings

All piping and appurtenances shall be within the confines of the Package with terminations at the edge of the base frame. The Contractor shall provide a suitable termination flange schedule with their General Arrangement drawing (s). Final orientation of termination points shall be subject to the Company's approval.

The piping of inlets and outlets shall comply with ASME B 31.3. Piping shall be routed to provide a neat and economical layout, to have the shortest run consistent with good engineering practice and to ensure easy access to all in-line valves and instrumentation. Piping shall be supported at the base and shall provide proper flexibility and normal accessibility for operation, maintenance and cleaning. Such piping shall be firmly fixed in a neat and orderly arrangement adapted to the contour of the equipment. All piping shall be free of slag, welding beads, or other foreign material.

No piping shall be routed across walkways or access ways unless they are elevated a minimum of 2100 mm above the top of grating level.

The number of interface connections shall be minimized. Drains or vents should be piped together and terminated with flanges at the base edge. The distribution of utilities etc. shall be handled within the confines of the base perimeter.

Sufficient space shall be allowed between lines to permit ready access for removal/repair, but in no instance shall there be a distance of less than 25 mm between a pipe and the outside of the largest flange or fitting in the adjoining pipe (taking into account any heat tracing or insulation).

Installation thickness and thermal movement of piping shall be taken into account when determining these spacing.

The minimum vertical clearance for all piping systems from top of flooring shall be 200 mm.

Piping at all equipment shall be supported so that equipment, control valves, etc. can be readily removed without provision of temporary piping supports and arranged so as to minimize pipe work dismantling.

Piping shall be routed and supported so as to have sufficient flexibility to allow for thermal expansion and contraction and for platform movement. Contractor shall demonstrate to the Company that suitable flexibility analysis has been carried out.

The Contractor shall minimize forces and movements imposed on Company's pipe work and shall provide a complete set of forces and moments at each termination point in order that the Company may complete analysis of the adjacent piping system.

All piping termination points, including inlets, outlets, utilities and drains shall terminate in ASME B 16.5 flanges of the appropriate rating having a minimum size of DN 50 unless otherwise approved by the Company. Only weld neck flanges shall be used.

Minimum flange rating shall be 150 # ASME raised face except where bolting to flat faced flanges is required. In those instances, flange facings shall match.

The Contractor shall provide a match flange for each termination flange with suitable bolts, nuts, gaskets and washers for any non ASME flange connections located at tie-in points.

The pipe work shall be constructed to allow complete draining of equipment and shall have plugged vents at high points to facilitate venting and hydro testing.

5.8 Piping Supports

Pipe supports shall be provided adjacent to the base edge for all external piping connections. Pipe supports shall be in accordance with Project piping support standard drawings. Plate type supports with rigid fixing through pipe work flange bolting is not acceptable. Pipe supports shall not be welded to piping. Insulate sheet shall be applied to prevent electro-chemical corrosion.

Piping shall be adequately supported for normal operation and maintenance conditions and to protect and prevent damage from lifting and transportation. Vibrational loading shall be minimized in accordance with the relevant Specifications.

Supports may be welded or bolted to the base but shall not be attached to unsupported floor plate.

Where utilized, temporary shipping and handling supports shall be clearly identified as such.

5.9 Instrumentation

The term Instrumentation shall mean Instruments, control system & safety instrumented system along with the applicable utilities, hook-up materials related to package equipment. Instrumentation shall be provided as per equipment of relevant package equipment specification, basic bid work-Instrumentation in section-2, vol-II of the bid package and Instrumentation design criteria in section-3 vol-II of bid package. Besides meeting the requirements as stated in above referred bid documents, following requirement shall also be met :

1. Where instrument air is required on the package, a 316 SS air pipe and header in the package shall be provided. The air header shall be DN 25 minimum and shall be mounted adjacent to all instrument air users. Each user shall be provided with a block valve adjacent to header. All take-offs shall be from the top of header, which shall be terminated at the base edge with a single flanged connection.

2. All non in-line instruments shall be provided with suitable support and stands. Instruments shall be supported on package steelwork where location and access is suitable. Instruments shall not be supported on process pipe work or hand rails.

3. Documentation for package equipment Instrumentation shall be as per the requirements indicated under 'Documentation' clause in Instrumentation design criteria of section-3, vol-II of the bid document.

4. All package equipment interface points, viz., Instrument air / gas header, Instrumentation power supply, tubing system, Instrumentation signals shall be suitably located, mounted at the package equipment skid edge. For Instrumentation signals, Instrumentation power supply field junction boxes mounted / located at the package equipment skid edge shall be used.

5.10 Electrical

All electrical equipment shall be in accordance with Functional Specifications of Electrical Equipment.

All cabling requiring to be connected to the Company's cabling, shall be provided with junction boxes located at the Base edge. Where local control panels or annunciation is provided, complete hook-up to panel shall be carried out by Contractor.

Junction box control panel cable glands shall be bottom entry. Equipment shall be so located as to allow adequate space for routing and glanding of cables.

Electrical cables shall be routed to minimize the likelihood of mechanical damage.

Electrical equipment which required external support shall be provided with purposely built stands or may be supported from package steelworks where suitable. Electrical equipment shall not be supported on process pipe work.

Two earthing bosses shall be provided on the base steelwork for connection to the external earthing system. Equipment shall be provided with a secure earth connection to the base steelwork.

Each item of equipment and piping flanged connection shall be mutually connected by copper conductors at least 6 mm^2 cross section. Each system shall be suitably connected to the base frame by a separate earthing strap.

5.11 Fasteners

Unless otherwise specified internally located bolting shall be provided with self-locking nuts or other positive securing devices.

Externally located bolts and fasteners shall be galvanized for protection. Refer Specification 2005 specification for Protective Coating.

5.12 Insulation

Unless otherwise agreed, the Contractor shall be responsible for the provision of all necessary insulation for heat conversion or the safety and protection of personnel in accordance with the Functional Specification for Insulation of Piping and Equipment.

Personnel protection against accidental contact with hot surface shall be provided. The minimum requirement to be met is API RP 14.

Insulation materials shall not contain asbestos.

5.13 Passive Fire Protection

Passive fire protection measures according to the requirements of Specification included elsewhere in the Bid Document.

5.14 Nameplates

Each major equipment item shall be provided with a 316 stainless steel nameplate suitably located for ease of viewing.

Data to be provided is to be in accordance with the particular Equipment specification and shall include the following as a minimum:

- Name of the Manufacturer
- Equipment Name
- Equipment Number
- Serial Number
- Capacity
- Maximum Operating Pressure (kg/cm^{2}g)
- Maximum Operating Temperature (^{0} C)
- Equipment Weight (kg)
- Name of Inspection Agency and Stamp as applicable

In addition, Equipment packages shall be provided with a 316 stainless steel nameplate suitably attached to the base to permit ease of viewing when standing next to the Package.

Data to be provided on the nameplate shall include but not be limited to:

- Name of the Package Contractor
- Package Name
- Package Equipment Number
- Manufacturer's Serial Number (where applicable)
- Package overall dimensions (L mm x W mm x H mm)
- Package Weight (kg)

• Year of Manufacture

The sizes of nameplates and data characters shall be as per the requirements of individual Equipment Specifications and ease of viewing when considering likely nameplate location.

Nameplates shall be securely attached using 316 stainless steel machine screws.

A copy (rub out) of details of name plates of equipment and package shall be included in documentation.

6.0 FABRICATION AND ASSEMBLY

6.1 General

Approval of all the drawings, weld procedure, calculations, etc. of the contractor is required by the Company /certifying agency prior to commencement of any fabrication.

6.2 Welding

All welding shall be in accordance with the requirements of the appropriate Codes and Specifications as follows:

▪ ASME B31.3 Process Piping

▪ ASME SEC VIII DIV I, DIV II AND ASME SEC IX

▪ American Welding Society Code (AWS D 1.1) Structural Welding Code -Steel

▪ 2009F FS for Welding & NDT

Welders shall be suitably qualified for the work undertaken.

6.3 Assembly:

Package Assembly procedures shall be provided. Where items have been dismantled for shipment, copies of assembly procedures shall be included with the consigned items.

7.0 INSPECTION, TESTING AND CERTIFICATION

7.1 General

Inspection, testing and certification shall generally comply with the requirements as detailed in the requisition documentation and in the other reference specifications.

Items of Equipment or material found to be unfit for the purpose for which it was intended or not fulfilling the requirements of order specifications, shall be remedied at the Contractor's expense.

Company's authorized representative shall witness the tests specified in the bid document.

7.2 Inspections

The Company or the Company's representative shall have access to the Contractor's works or that of any sub-Contractors for the purpose of inspecting Equipment at any reasonable time during its manufacture and/or assembly. The purpose of such inspections shall be to establish that materials, construction, workmanship, dimensions and (where applicable) testing are being carried out in accordance with the specified requirements.

Accordingly, the Contractor shall ensure that Company is allowed sufficient time and free access to carry out such inspections during the contract. All necessary certification on materials, shop test data, etc. shall be made available to verify that the requirements of the order are being met.

Non-destructive test (NDT) of the equipment or package shall be done in accordance with the relevant unit data sheets or equipment specification.

No equipment surface shall be painted until surface inspections have been completed.

7.3 Hydrostatic Tests

All pressure packaged equipment and piping shall be hydro-tested in accordance with the appropriate functional specifications and code requirements.

Process piping or tubing shall be tested with fresh water after shop fabrication into sub-assemblies.

The hydro test pressure for piping shall be 1.5 times the design pressure (with temperature compensation as per ASME B31.3)

Pressure testing shall be maintained long enough to permit complete inspection but shall not be less than two (2) hour. Reports of the testing shall be supplied to the Company.

After the hydrostatic test having been finished, Contractor shall blow water off all piping or tubing.

7.4 Equipment Performance Tests

The specific requirements for performance testing will be detailed in specific Equipment specifications. In general Equipment will be subjected to performance testing where performance guarantees have been stipulated.

Equipment items may be individually performance tested where this is necessary to establish performance criteria across an operating range. Where performance guarantees apply to a complete Package then train testing of the assembled Equipment items shall be undertaken.
Before package equipment functional / performance test is taken by vendor, complete instrumentation inclusive of field instruments, package control / safety-instrumented system are calibrated, functionally checked by the vendor/ contractor. Functional checks inclusive of simulation checks, factory acceptance test of Instrumentation shall be done as per the requirements of basic bid work- Instrumentation, vol-II of the bid document.

All instrument functions shall be verified by using fresh water or instrument quality air as a substitute for the process liquid/gas to prove the integrity of the control equipment/instrumentation.

Performance tests shall be completed at the Manufacturer's works using facilities where operating conditions can be controlled.

Where specified, a visual inspection of the Equipment internals shall be carried out after performance testing to view any component damage and to establish internal clearances are according to specified requirements.

The Contractor shall ensure test instrumentation calibration is current and supported by certification from an approved third-party certifying agency.

7.5 Assembled Package Testing

The completed pipe work assembled on the package shall be subject to leak test by air or nitrogen. Test pressure = 1.1 x maximum operating pressure in the Manufacturer's works to verify integrity of all joints.

A full functional test of the completed assembly including instrumentation and electrical equipment shall be done in the Contractor's workshop. During the test alarms, shut down and remote signals shall be simulated.

The Contractor shall be required to submit a full testing procedure at least 6 weeks prior to the commencement of testing and covering the full extent of testing on the completed assembly.

The testing procedure shall be approved by the Company prior to the commencement of testing and shall be complete with all equipment procedures and checklists. The Contractor shall be responsible for providing all necessary utility services to conduct the tests.

7.6 Certification Requirement

Material certification and tracing requirements shall be detailed in the procurement documentation.

Acceptance criteria shall be in accordance with the requirements of the procurement documentation, applicable design code and the certifying agency.

8.0 PAINTING AND PREPARATION FOR SHIPMENT

8.1 Painting and Protective Coating

Painting and protective coating about packaged equipment, piping, base steel and others shall be in accordance with the requirements of the Specification for Protective Coating.

8.2 Preparation for Shipment

Items of Equipment prone to mechanical damage or corrosion shall be appropriately packaged and protected from damage during shipment.

Instruments shall be removed and suitably tagged, packaged and crated in accordance with manufacturer's recommended requirements.

Where equipment extends beyond the base edge and any equipment or component parts that must be removed for shipment purposes shall be individually tagged and crated in waterproof lined boxes constructed from 50 mm timber. Boxes shall be securely attached to the Package during shipment.

Exposed machined and threaded surfaces shall be coated with an easily removable rust preventative.

All flanged openings shall be protected with steel plate covers attached by appropriate bolting and sealed with a plastic compound.

Each item of equipment shall be checked for its suitability to resist a force of 0.7 g (6.9 m/s^2) (in any direction) during transportation. Where the equipment is not adequate then brackets for attaching sea fastenings shall be provided.

The equipment shall be protected for storage of 12 months at site; if any extra precaution is to be taken for storage beyond 12 months same shall be stated in the O&M manual of equipment.

8.3 Lifting Equipment

Where a single point lift of the package or item of Equipment is impractical due to the location of on-base Equipment the Contractor shall provide a suitable lifting frame or appropriate spreader beams complete with all necessary slings and shackles as part of the package. Spreader beams and lifting frames shall be of welded construction using full penetration welds and shall be designed for the same load factor as equipment or Package lifting lugs. Safe working loads shall be clearly marked on each lifting device and copies of lifting device drawings, test certificates, third party certifications and procedures for rigging and lifting shall be provided.

8.4 Items Shipped Loose

Items that require removal for shipment shall be individually tagged and each item shall be itemized on the packing list.

FUNCTIONAL SPECIFICATION

FOR

"SAFETY STUDIES"

PREPARED/ REVISED BY	REVIEWED BY	APPROVED BY	TOTAL No. OF PAGES	DATE	REV. No.
NG	VBD	PKM	32	05.12.2011	3
KS	VBD	JSS	20	02.11.2007	2
AKM	SKG	JSS	21	07.07.2005	1

CONTENTS

1.0 INTRODUCTION

1.1 Scope
1.2 Contractor's Responsibility
1.3 Abbreviations
1.4 Purpose of this Document
1.5 Mandatory Indian Statutory Requirements

2.0 OBJECTIVES

2.1 General
2.2 Scope of Safety Studies Works
2.1.1 Detailed Design Phase
2.2.2 Construction, Transportation, Installation and commissioning Phases
2.3 Safety Studies Schedule

3.0 GENERAL REQUIREMENTS

3.1 Quality and Design Integration
3.2 Safety Studies Validation
3.3 Assumptions Register
3.4 Risk Reductions Register
3.5 Progress and Weekly Status
3.6 Safety Handbook for Site

4.0 SAFETY STUDIES OUTLINE CONTENTS AND PROCESS

4.1 Safety Studies Methodology
4.1.1 Field and Layout Review
4.1.2 Coarse Quantified Risk Assessment
4.1.3 Hazard Identification (HAZID) Workshops
4.1.4 HAZOPs
4.1.5 CHAZOP Control Hazards and Operability Study
4.1.6 Safety Integrity Level Assessment
4.1.7 Detailed Quantified Risk Assessment
4.1.8 Critical Controls
4.1.9 ALARP Workshops
4.1.10 Escape, Evacuation & Rescue Analysis EERA)

5.0 DOCUMENTATION

1.0 INTRODUCTION

1.1 Scope

This document defines the minimum requirements for the Safety Studies to be conducted for all the aspects of the Contractor's Works. This includes the works associated with the new Platform and Risers & I/J Tubes. Contractor has to assess the effects of the modifications to the existing facilities. Effect of new facilities on the existing facilities shall be a part of the studies to be carried out by the contractor.

1.2 Contractor's Responsibility

It shall be the responsibility of the Contractor to conduct appropriate Safety Studies for the Works in accordance with this document.

The Contractor shall at all times be responsible for completing their component of the Safety Studies as per codes & standards. The Company's role shall be limited to review, approval and regulator interface. The Contractor shall be responsible for all aspects of their Safety Studies submission to the Company.

The Contractor shall work with the Company to ensure that an acceptable methodology dealing with each aspect of the Works is evolved.

The Safety Studies shall be completed by personnel with a track record of successfully completing similar studies for similar projects.

The Contractor shall be responsible for developing and stewarding the Safety Studies through the project, ensuring that the Safety Studies are as per codes & standards.

1.3 Abbreviations

The following abbreviations are used in this document:

ALARP	As low as reasonably practicable
BLEVE	Boiling Liquid Expanding Vapour Explosion
EPC	Engineering, Procurement and Construction
EPSC	European Process Safety Centre
ESD	Emergency Shutdown
FEA	Fire and Explosion Analysis
HAZID	Hazard Identification
HAZOP	Hazards and Operability Study
CHAZOP	Control Hazards and Operability Study
HSE	Health, Safety and Environment
IRPA	Individual Risk per annum
ISO	International Standards Organization
MAE	Major Accident Event

ONGC	Oil and Natural Gas Corporation Ltd.
PLL	Potential Loss of Life
QRA	Quantitative Risk Assessment
RRM	Risk Reduction Measure
SIL	Safety Integrity Level

1.4 Purpose of this Document

This document indicates the minimum requirements for the Safety Studies to be conducted during the Works.

1.5 Mandatory Indian Statutory/Regulatory Requirements

This document has been prepared in accordance with International Standards. The EPC Contractor shall ensure that the Scope of Work is executed in accordance with all mandatory Indian Statutory requirements as a minimum.

The Safety Studies shall comply with all relevant legislation, national and international conventions, protocols, agreements, codes and standards; rules and regulations of the classification society. In addition, the Safety Studies shall demonstrate that the facilities have been designed and constructed to reduce the operating risk exposure to as low as reasonably practicable (ALARP). The safety studies shall be conducted in accordance with the requirements of this specification and the latest revision of the following codes and standards:

- IEC 61511 — Functional safety-safety instrumented systems for process industry
- ISO 14690 — Petroleum and natural gas industries- Health, safety & environmental management systems
- API RP 75 — Recommended practice for development of a safety and environmental management program for offshore operations and facilities
- HSE manual of ONGC

2.0 OBJECTIVES

This document has the following objectives:

1. To provide guidance and expectations on Safety Studies methodologies, scope of work, workforce involvement and to ensure that critical controls are provided.

2. To define the demonstrable acceptable criteria that the Works are required to meet. In addition, the concept of ALARP shall be applied across the works. All steps shall be taken to reduce the risks to a level that is as low as reasonably practicable.

Following contract award, a detailed Safety Studies Methodology and schedule shall be developed by the Contractor (see Section 4.1). The Safety Studies and schedule shall be kept updated throughout the project.

2.1 General

The Safety Studies shall meet all Regulators requirements including methodology, completed Safety Studies and demonstration of ALARP.

The Contractor shall be responsible for completion of the Safety Studies applicable for the scope of work.

As a minimum, the Safety Studies shall address the following:

- The operating conditions, location and environment
- Operations and activities through all phases of work. These shall include, but not limited to design, fabrication, transportation, installation, commissioning and operation.
- Potential effects during simultaneous operations, if production continues, during certain stages of installation. This shall include considerations of shutdowns, operating procedures (e.g. Permit to Work), etc.
- The support services and operations necessary for normal and emergency operations.
- Interaction between the platforms within the process complex (process complex may consist of 2 or 3 platforms which are bridge connected.)

2.2 Scope of Safety Studies Works

The Safety Studies shall be developed during the detailed design phase and continued into the installation and commissioning phases, and shall ensure that risk mitigation is introduced at the earliest possible time.

The Contractor shall develop a schedule for the completion of the Safety Studies.

The schedule shall include the Contractor's expectations of the Company resources.

The Safety Studies scope of work is described below. The Contractor shall be responsible for conducting Safety Studies that are acceptable to all stakeholders and therefore it shall ensure itself that the scope identified is acceptable.

The Safety Studies shall cover all aspects of the Contractor's scope of work (the "Works"). This includes the works associated with the new Platform and any associated modifications to the existing facilities.
The Contractor shall implement the findings of the Safety Studies as applicable to his scope of work.

2.2.1 Detailed Design Phase

Initially the Safety Studies shall be developed in parallel with the detailed engineering phase of the project.

The Safety Studies shall demonstrate that the Works design is robust and that risk management has been incorporated throughout the design process.

The detailed design Safety Studies shall be completed and accepted by stakeholders (Company, regulators, etc.) prior to construction or installation. The contractor shall be responsible for the timely submission of deliverables to the Company to assist this process.

The deliverables that shall be produced by the Contractor shall include but are not limited to the following:

- Safety Studies Project Execution Plan and Schedule. This shall include project procedures such as Quality Assurance (including Management of Change) and Management of Assumption register, Management of HAZID Actions and Management of Risk Reduction Actions.
- Safety Studies Plan and Safety Studies Methodology documents for the project.
- Initial high level review of modifications to existing facilities to ensure no unacceptable risks are introduced.
- Hazards Identification workshops for the Works.
- Hazards Register and Hazards Identification documents with actions list. The Hazards Register shall be maintained and updated periodically through the project.
- Internal and external safety audits
- Coarse QRA with feedback sessions into the design process team at earliest timeframe. The coarse QRA report shall document the process, key assumptions, and results. The coarse QRA shall be robust and provide sufficient information to allow early design decisions on a risk based approach.
- Completion of the detailed Safety Studies:
  - Fire and Explosion Analysis
  - Gas and Smoke Dispersion Analysis
  - Non Process Hazards Analysis
  - Emergency Systems Review
  - Escape and Rescue Analysis
  - Quantitative Risk Assessment (Updated form Coarse QRA)
  - Impact analysis covering ship collision and drop objects

- Develop and maintain relevant documentation registers. These include but are not limited to:
  - Assumptions Register
  - Safety Studies Comments Register

- Complete and document the required HAZOPs for the detailed design phase. The HAZOP report should document process and outcomes. The contractor shall be responsible for closeout.
- Document demonstration of Critical Controls through use of Bowtie diagrams (or similar)
- Complete and document an ALARP workshop to identify potential risk reduction measures for the phase of the project. At this stage the emphasis would be on hardware changes. The ALARP sessions shall be workshop based.
- Develop and maintain a Risk Reduction Measures (RRMs) register for tracking of actions throughout the project. This shall be used for documenting the identification, tracking and closeout of actions.
- Documentation recording audits of the project closeout process for each of the HAZOP, HAZID and RRM actions.
- Complete and document a HAZID for the construction, installation, transportation and commissioning phases. The HAZID shall be used to identify Major Accident Event potential and shall put in place prevention/mitigation plans.

2.2.2 Construction, Transportation, Installation and Commissioning Phases

During the construction, transportation, installation or commissioning phases of the project, modifications to the detailed design Safety Studies may be required and it is during this stage that Company Operations Personnel shall become increasingly involved.

Therefore during these phases the Safety Studies shall be updated as required.

In addition to the update of the detailed design Safety Studies, the following shall be conducted by the contractor during the construction, transportation and installation phases:

- Undertake and document any additional HAZOPs as required during the construction phase of the project. The contractor shall include any requirement for additional HAZOPs in their tender.
- Complete and document construction and installation phase HAZIDs. To be completed at appropriate stages prior to the activities
- Contractor shall prepare the HSE plan for the works. However any additional HAZOPS or HAZIDS requirement arise during these studies shall be taken care of and shall be a part of safety studies during final approval.
- Provide all documents in finalized form and submit to the Company.

2.3 Safety Studies Schedule

The contractor shall produce a Project Execution Plan and Schedule for the Safety Studies. The schedule shall include all the elements discussed in Section 2.2 and as required by the Contractor. The Project Execution Plan and Schedule shall include due allowance for all elements to be completed by the company.

3.0 GENERAL REQUIREMENTS

3.1 Quality and Design Integration

The Safety Studies shall be performed under a quality assurance system that is consistent with ISO 9001.

The Safety Studies shall be integrated with design activities so that the results of Safety Studies are incorporated into the design.

Thus the contractor shall ensure that the personnel performing the Safety Studies:

- Commence work as soon as possible after the start of the detailed design
- Have early attendance at all design meetings and reviews
- Facilitate and encourage the involvement of Company's operations personnel or representatives in workshops and reviews of the Safety Studies.
- Feed back lessons from previous Safety Studies
- Regularly report progress to Company
- Ensure that change control processes have been documented and followed

Accordingly a list for vital and essential elements along with a checklist shall be provided for monitoring and review. A list indicating all the types of materials used i.e. piping, pipeline, structural material etc., in a consolidated form with respect to discard date (i.e. life of concerned system/structure/member) for each material/structure/member/piping connection small bore lines etc. to be provided. Design factor so considered may be indicated in the introduction of such booklet/document. Similarly a separate list shall follow the equipments, tanks, compressors, pumps etc with respect to discard month/year. At each of such equipment/ structure/ system adequate plate to be stamped.

3.2 Safety Studies Validation

During the development of the Safety Studies, the contractor shall log and track the development of the design (drawing, reports and specifications etc.) using document control registers and the assumption registers. This shall ensure that Safety Studies are based on the latest design and are integrated with the latest design activity. An audit trail shall be available and checked at the completion of design phase and at the completion of the Works to verify that the Safety Studies are consistent with the current design.
To formally address validation for the Safety Studies, the Contractor shall perform the following key activities:

- Maintain a comments register to ensure and track consultation with Design Engineers, Company Personnel and Regulators. The comments register is to be tracked to closeout the same.

- Develop a Compliance Register to clearly demonstrate to a 3rd party how the Safety Studies complies with relevant legislation and associated guidelines

During the conduct of the Safety Studies, the Company reserves the right to undertake a technical audit of the contractor's work, its integration with design, delivery to regulator requirements, traceability, etc. Company shall provide due warning of the audits and the Contractor shall fully comply and assist Company by ensuring appropriate contractor's personnel are available for the durations of the audit. The Company shall issue an audit report and the Contractor shall respond and address any issues raised.

3.3 Assumptions Register

As part of performing the Safety Studies, a range of assumptions shall be made. These assumptions are key inputs to the calculation of risk and shall be recorded in an Assumption Register cross referenced to the appropriate Safety Study section.

As part of the conduct of the Safety Studies, the contractor shall develop a procedure to ensure that all relevant personnel review and approve the assumptions used in the Safety Studies on a regular and progressive basis. As new assumptions are added, the Assumption Register shall be updated and approved. Each individual assumption shall have a revision status so the addition and alteration of assumptions can be tracked clearly.

The Assumption Register shall be approved as a package prior to final submission of the Safety Studies to the Company.

3.4 Risk Reductions Register

It is expected that as part of the Safety Studies, Risk Reduction Measures (RRMs) shall be identified. RRMs may require evaluation to determine if they are valuable risk reduction proposals. Therefore, the contractor shall develop a method for:

- Documenting RRMs, identifying where they were identified, responsible persons for the closeout, timing of the closeout, etc. The method shall include a hierarchy of risk reduction.
- Tracking of the actions required for each RRM and signoff acceptance for that action. The action response shall be consistent with any methods developed as part of Section 5.
- Ensuring that all recommendations accepted are incorporated in the Works.

3.5 Progress and Weekly Status

The contractor shall provide weekly status reports outlining as a minimum:

- Progress of the Safety Studies as measured against the approved schedule.

- A work completed and two week look-ahead status report
- A month look-ahead for Company interface requirements
- List of safety compliance

3.6 Safety Hand Book for Site

With the coverage of 3.1 to 3.5, a handbook in condensed form indicating vital and essential aspects shall be kept at two important places of the work site and at central point for all time reference. Every such handbook shall have a checklist as a helpful monitoring tool.

4.0 SAFETY STUDIES OUTLINE CONTENTS AND PROCESS

The following sections provide a minimum expectation of the requirements for the Safety Studies to be conducted for the execution of work.

The primary components are:

- Safety Studies Methodology
- Safety Studies
- Critical Controls
- ALARP Implementation

A separate handbook required to be issued on ALARP levels and critical jobs falling in different ALARP areas as a helpful advanced planning tool. All pocket books/small handbooks indicating cross references are to be provided and to be made available with all senior level executives for supervisions/implementation checks.

The following sections provide guidance with respect to Company's expectations.

4.1 Safety Studies Methodology

The Safety Studies Methodology is required as an early stage contractor deliverable. It shall be reviewed and approved by Company prior to commencement of the Safety Studies.

The Safety Studies Methodology shall provide a clear and concise statement of the processes to be used. It shall be used as an input into the Safety Studies and shall define the deliverables to be generated.

The Safety Studies shall address all phases of the Works, including but not limited to transportation, installation, hookup, commissioning, normal operations, and maintenance operations.

The schedule for the Safety Studies and Safety Studies Methodology shall be submitted to the Company no latter than 30 days after Contract award.

The Safety Studies Methodology shall include (but not be limited to) the following and make due allowance for details in the following sections:

- Describe the overall process to be used in the Safety Studies
- Describe the process by which operator/workforce input shall be ensured
- Describe the HAZID and HAZOP process to be employed, resources required and closeout procedure. This shall include detailed description of Hazard Matrix (ISO 17776), its use and interpretation.

  Note the Company may audit HAZOP closeout, however closeout shall remain the responsibility of the Contractor's design team.

- Describe the use of registers in the project such as Assumption Registers, Compliance Registers etc.
- Include Performance Criteria that the Safety Studies shall be using (for example, maximum thermal radiation levels, toxic gas levels, etc)
- Describe the consequence (such as Fire and Explosion Analysis) and other studies (such as Non Process or Emergency Systems Review) to be completed, methodology, software to be used, deliverables, etc.
  Where software is to be used, the contractor shall provide a full description, validation of the results and a description of the input and output. Where possible, the Contractor shall make available to Company the software models.
- Describe a Quantitative Risk Assessment methodology detailing the QRA Rule Set to be used, software to be employed for integration of risk, sources of data, deliverables etc.
- Describe the details of Sensitivity Analysis to be completed as part of the QRA.
- Describe the implementation of Critical Controls
- Describe the identification of risk mitigation options, the application of ALARP and the tracking to closeout of RRMs.
- Drawings/Documents approved prior to HAZOP/HAZID shall be considered as "Drawings/Document approved for HAZOP/HAZID study." Only after HAZOP/HAZID close out, drawings/documents are to be considered as approved for construction.

4.1.1 Field and Layout Review

Following development of the Safety Studies Methodology, the contractor shall undertake a review of the proposed new platform location and layout. The purpose of this review shall be to confirm that new platform location and layout is acceptable from a risk/safety point of view. Also the proposed platform (if part of existing complex) does not yield excessive risks/interaction with the other platforms in the existing complex.

The Field and Layout review shall be submitted to the Company for review. Comments from this review shall be incorporated into the reviewed document and the Works (as required) without impacting the project schedule.

4.1.2 Coarse Quantified Risk Assessment

To assist in the early identification of the facility risk profiles, a coarse QRA, shall be completed at the earliest opportunity after start of the detailed design with the results being provided back to the design team and the Company.

The initial coarse QRA shall utilize the same technique to be employed in the subsequent detailed QRA and Safety Studies.

The Contractor shall, as part of the Safety Studies Methodology, document the methodology to be employed in the coarse QRA and the assumptions made. The coarse QRA shall provide early risk information to feed into the detailed design and subsequent Safety Studies.
The Coarse QRA shall cover the scope of the Works.

4.1.3 Hazard Identification (HAZID) Workshops

HAZID study shall be carried out for early identification of potential hazards and threats.

HAZID study shall be conducted by an agency of repute and the HAZID team shall be experienced multi – discipline team of relevant discipline engineers i.e. Safety, Process Design, Operation and Other disciplines (as required) , having sufficient knowledge to recognize and identify all the HSE issues, led by Team Leader/ Facilitator. Team Leader/ Facilitator shall have sufficient experience of conducting HAZID study & safety reviews for similar facilities.

4.1.3.1 DEFINITION: - Hazard Identification (HAZID) is a technique for early identification of Occupational Health Safety and Environmental (HSE) related Major Accident Events (MAE)/ Hazards of a project. This technique should be applied at the very outset of a new venture or during the early stages of a development. It is therefore likely to be the first formal Health Safety and Environment (HSE) related study for any new project. The major benefit of HAZID is that early identification and assessment of the critical HSE hazards provides essential input to project development decisions. This will lead to safer and more cost-effective design options being adopted with a minimum cost of change penalty.

a. Hazards

These are defined as having the potential to cause harm, including ill health and injury, damage to property, products or the environment, production losses or increased liabilities.

b. Threats

These are possible causes that could potentially lead to a hazard and produce an incident.

c. Incidents

These are defined as an unplanned event or chain of events, which have caused or could have caused injury, illness and or damage (loss), to assets, the environment, or third parties.

The primary means of documenting Major Accident Events (MAEs) and their associated hazards shall be Hazard Identification (HAZID) Workshops. Additional Hazard Identification may also occur throughout the project prompted by the analyses and reviews undertaken.

It is anticipated that the following main HAZID workshop sessions shall be required. The Contractor shall be responsible for organizing, running and documenting the HAZID process.

- At the beginning of the detailed design, a detailed HAZID for the project. The Hazards Register developed shall be the basis upon which the subsequent Safety Studies are developed through the design stage.
- At the beginning of the construction phase of the project, an update and review of the initial HAZID shall be conducted, with an increased Company Operation input. The Hazards Register shall be updated for new Hazards and for additional operations input.
- In addition, a HAZID workshop session shall be conducted for the construction and installation phases in the project. This HAZID shall be completed in two parts, initially during the detailed design phase, followed by an update at the relevant time during the construction phase prior to installation. The HAZID shall identify issues associated with the construction and installation phases of the project and actions required to minimize risk.

All HAZID Workshops shall be structured review meetings that provide a systematic approach to the identification and screening of hazards. A multidisciplinary team shall provide the range and depth of expertise and knowledge necessary for a comprehensive review. Such personnel shall attend the workshop. MAEs identified during the workshops shall be assessed and screened using an approved Risk Matrix (ISO 17776) or other Company approved risk ranking system.

4.1.3.2 The key objectives of the HAZID Workshops shall be to:

- Identification and awareness of potential hazardous events and how they may be contained by good design
- Identify MAEs capable of posing a serious and immediate risk to health and safety including flammable releases, toxic releases, non-process incidents, etc.

- Identify the hazards that cause, or contribute to causing, those MAEs (eg. Process upset, equipment failure, maintenance).
- Identify existing engineering or operational (eg. Procedural) controls and measures that are included in the design for prevention or mitigation
- Identify those controls that are safety critical to the identified MAE
- Where appropriate identify additional prevention and/or mitigation RRMs for improvement to meet the ALARP concept.
- Identify further hazard assessment that may be required to be addressed during detailed design.

4.1.3.3 **DOCUMENTS REQUIRED**

As a minimum following documents/ information may be considered as guide for carrying out the HAZID study:

a) Process Flow Diagrams (PFD) containing material balance as minimum
b) Development layout including field layout, well head layout, facility layout and hazardous area layout
c) Process description including all planned operating cases
d) Project description including all options, life cycle issues and planned plant flexibility
e) Safety philosophy
f) Preliminary operating philosophy and product take-off constraints
g) Major inventory details/ equipment datasheets.
h) Additional information from site visit reports, pictures etc., if available
i) Material Safety Data Sheets/Bulletins, if available

4.1.3.4 **STUDY PROCEDURE**

The study method is a combination of identification, analysis and brainstorming on the hazards identified. The checklist is divided into three main sections, which are as follows:

A) External and Environmental Hazards
   a1) Natural and environmental hazards
   a2) Created (man- made) hazards
   a3) Effect of the facility on the surroundings
   a4) Infrastructure
   a5) Environmental Damage

B) Facility Hazards
   b1) Control Methods/Philosophy
   b2) Fire and Explosion Hazards
   b3) Process Hazards
   b4) Maintenance Hazards
   b5) Construction/Existing Facilities

C) Health Hazards

The intention of the study is to identify and describe potential HSE hazards. It will also recognise continuous releases from the installation and their effects on the environment. This will include all emissions not associated with an incident but as part of the design intent. The hazards and continuous emissions will be further evaluated as a normal part of the later development of the project.

4.1.3.5 **PRIORITISATION**

During the study the Team may use a general qualitative system to give a simple priority rating to the risks (high, medium or low) associated with the hazards identified. An example of such system is given in Corporate Risk Matrix (attached). This would combine an estimation of the HSE consequence of an incident or a continuous emission with its likely probability. Failure effects are classified according to their severity as follows:

Low: **Acceptable without required further action.**
Failure affects which would not significantly reduce the installation's safety and which would involve actions by operators that are well within their capabilities. Minor failure consequences may include for example a slight reduction in safety margins or functional capabilities. Examples include small unignited condensate release from process equipment.

Medium: **Acceptable but must be managed at ALARP**
Failure effects which reduce the capability of the installation or the ability of the operators to cope with adverse operating conditions to the extent that there would be, for example, a significant reduction in safety margins or functional capabilities, a significant increase in operator work load or in conditions impairing operator efficiency, possibly leading to minor injuries.
Examples include the formation of un-ignited clouds from releases at process equipment, pool fires from small condensate releases.

High: **Unacceptably high, action must be taken immediately to lower the risk.**

a) Failure consequences which reduce the capability of the installation or the ability of the operators to cope with adverse operating conditions to the extent that there is:
- A large reduction in safety margins or;
- Physical distress or excessive work- load such that the operators cannot be relied upon to perform their task accurately or completely. Or the work load is such that a combined operation, maintenance and construction work cannot be fully and safety controlled by the Site Management, or;
- Serious or fatal injury to any number of occupants, damage to the site facilities, a pollution risk, or;
- Conditions arising which requires a controlled de-manning of the site.

Examples include jet fires from ignited releases at process equipment.

b) Failure effects which require emergency evacuation of personnel from the site, or possibly leading to fatal injuries, extensive damage to or loss of the site facilities, or major pollution.

Examples include large gas cloud over the gas plant with subsequent explosion.

All the hazards identified during HAZID Workshops shall be recorded and described in the project Hazard Register. The Hazard Register shall be maintained throughout the project by the contractor and shall provide a primary input to the Safety Studies as well as recording their outputs. The register shall also allow tracking and closeout of actions.
At the end of the study a report to be produced which discusses the findings of the study and details the critical issues and the action to be taken. All the study recommendations shall be implemented by the contractor without any implication on schedule and cost to Company. For proper recording and reporting of Project Safety Management, a corrective Action on Recommendation Form shall be developed for future tracking and a Close Out Report indicating the actions taken against each recommendations emerged during study.

4.1.4 HAZOP

Hazard and Operability (HAZOP) studies are valuable as a design tool and in a role of supplementing the Safety Studies and are to be carried out on all final updated Piping and Instrumentation Diagrams (P&IDs) during engineering. The HAZOP study shall cover all the lines and equipment that are modified and have been installed newly as per P&IDs.

The contractor shall arrange and conduct HAZOP study through an agency of repute and be responsible for the completion of the HAZOPs and ensuring the identification of MAEs and other issues are carried from the HAZOPs to other Safety Studies.

For each HAZOP study, contractor shall arrange a third party chairman for facilitating the HAZOP study with sufficient experience of conducting HAZOP study & safety reviews for similar facility and shall be independent of the Contractor's design/project team. Resume of HAZOP chairman shall be submitted to the COMPANY and shall also be participated by the relevant discipline engineers of the contractor.

It is anticipated that two HAZOPs shall be required. The scheduling of the HAZOPs shall be the responsibility of the contractor and these shall be included in the Safety Studies Schedule (see Section 2.3).

- A Preliminary HAZOP during the detailed design. This may also act as a design review.

  This shall be conducted as early as practical in the detailed design phase on first issue key process and instrumentation drawings to maximize impact. Note that a detailed HAZOP shall also be required later in the design.

The HAZOP shall be led by an experienced HAZOP leader and minutes collected via a HAZOP package that allows tracking and closeout of each action.

- A detailed HAZOP to be conducted on all completed elements during the detailed design prior to Approval for Construction.

  Designers, HSE engineers, Company representatives and regulators (as appropriate) should attend the HAZOP.

  The HAZOP shall be led by an experienced HAZOP leader and minutes collected in via a HAZOP package that allows tracking and closeout of each action. Any incomplete actions (i.e. that are required to be completed at a later stage of the project) shall be approved by the project manager and highlighted.

  The HAZOPs shall be completed in a manner that is consistent with industry standard approach. The contractor shall, as part of the Safety Studies Methodology, describe the HAZOP process. The HAZOP minutes shall be collated in an approved package that allows closeout interface by the project.

  The contractor shall provide the name and brief description of the computer software proposes to use for recording and reporting deliberations of HAZOP study. Software of international repute shall be used.

  Based on the study, recommendations for mitigation/reducing the hazards and ease of operability shall be firmed up and report shall be produced and submitted to the Company.

HAZOPs shall be conducted in accordance with:

- IEC 61882 – Hazard and Operability studies – Application guide; and
- EPSC-HAZOP : Guide to Best Practice

Contractor shall submit a HAZOP study procedure for review by the company at least 4 weeks prior to the commencement of the HAZOP study. The procedure shall contain following information:

- HAZOP Methodology
- Team composition
- HAZOP Timings & schedule
- Proposed list of nodes
- List of reference documents

The HAZOP study notes shall be recorded in the format called "WORKSHEET", where each deviation is considered, every possible consequences are recorded and actions where necessary are recored and where not necessary, the reasons are stated. All

action items are to be numbered so as to enable clear identification of the cause and consequences of potential hazards.

For each HAZOP study system, a format called "COVER SHEET" is to be prepared to explain in detail the systems considered for HAZOP study P&IDs number, line number and design intention etc.

A separate list of recommendations shall be made giving reference to HAZOP study work sheet. Also, this list will be divided into two parts for hardware change, software change and operating instruction as per the implection of the recommendations.

The HAZOP study report will cover the following section in general.

1- Introduction
2- Executive summary
3- Description of facilities
4- Approach/methodology
5- Team composition and period
6- List of P&IDs
7- Description of nodes
8- P&IDs with nodes marked-up
9- HAZOP study worksheets.
10- Conclusion/Recommendations (sub divided as hardware change software change, operating instruction, verification/check, P&ID depiction, etc.)

HAZOP study report shall be submitted by contractor in hard form alongwith electronic copy of report on CD.

IMPLENENTATION OF HAZOP STUDY RECOMMENDATIONS

a) All HAZOP study recommendations shall be implemented at site and shall also be incorporated in all the relevant documents by the contractor without any implication on schedule and cost to Company.
b) Contractor is required to prepare a HAZOP study Close Out Report indicating the actions taken against each recommendations emerged during the HAZOP study. The report shall be submitted to the Company.

4.1.5 CHAZOP - Control Hazards and Operability Study

Control Hazards and Operability Analysis (CHAZOP) is a highly structured hazards identification tool for instrument control systems.

This methodology to be used to identify potential flaws and weaknesses of instrument control and computer systems by reviewing how the system deviates from design intents. It should be used for proposed and existing Safety Critical Software and Instrument Control Systems. It should supports the risk analysis requirement in IEC 61508, Functional Safety of Electrical/Electronic/Programmable Electronic Safety-Related Systems

The following procedure needs to be followed as minimum guidelines for the study and the minimum deliverables from this study. :

1. Break system into manageable sections (Nodes).
2. Prepare list of Guidewords, Parameters and Operations to be examined.
3. For each Node create Deviations.
4. List and record causes for each Deviation.
5. List and record Consequences for each Cause.
6. List and record Safeguards or Controls that may prevent either the Cause or the Consequence.
7. Implementation of the recommendations and any required statutory clearances will be contractor's responsibility without any time and cost impact to company. The contractor shall prepare and submit the "Action Taken Report" on the recommendations.

4.1.6 Safety Integrity Level Assessment

The Contractor shall undertake a Safety Integrity Level (SIL) assessment for all safety related electrical/electronic/programmable electronic/pneumatic systems.
SIL study shall be carried out by third party of exceptional repute. Contractor shall submit the third party experience list and resume of persons who would be associated with the study and shall be independent of the Contractor's design/project team.

The SIL study shall start immediately after all the required documents are available.

The SIL assessments shall be conducted in accordance with:

- IEC 61508 – Functional Safety of Electrical/Electronic/Programmable Electronic Safety Related Systems
- IEC 61511 – Safety Instrumented system for the process industry sector
- ANSI/ISA-S84.01 – Application of Safety Instrumented Systems for the Process Industries

The classification methodology comprises "Classification of IPF dangerous failures" (failures when a genuine demand exists). Classification of IPF (Instrument Protective Functions) dangerous failures takes into account:

- Demand rate (W)
- Exposure time parameter (F)
- Probability of avoiding the hazardous event parameter (P)

- Consequences related to personnel health and safety (S)

Following are considered while determining personnel health and safety consequences:

- Potential for human injury if the IPF fails upon occurrence of a hazardous situation
- Exposure of personnel in the area affected by the hazardous situation
- Possibility of the potential casualties avoiding/escaping the hazarding situation.

- Consequences related to production and equipment loss (economic loss) (L)

- Consequences related to environmental impact (E)

Following documents are to be considered for the SIL study:

- Process description
- Equipment Layout
- P&IDs
- Cause & Effect matrices
- HAZOP Study report

The SIL assessments shall:

- Evaluate the SIL/reliability requirements for each safety related electrical/ electronic/programmable electronic system; and
- Verify that the proposed system configuration shall achieve these SIL/reliability requirements.

The contractor shall, as part of the Safety Studies Methodology, describe the SIL assessment process.
At the end of the study, a report shall be generated. The report will comprise the conclusions of the study and include SIFs classified and their description, SIL assigned (with applicable reasoning), causes, protection layers, hazardous scenario and suggestions/recommendations for mitigating the effects of the hazards.

Implementation of the recommendations and any required statutory clearances will be contractor's responsibility without any time and cost impact to company. The contractor shall prepare and submit the "Action Taken Report" on the recommendations.

4.1.7 Detailed Quantified Risk Assessment

The scenarios identified in the HAZID Workshop shall be developed in the detailed Quantified Risk Assessment to cover the range of potential MAE (Major Accident Events) outcomes.

Quantified Risk Assessment study shall be carried out by third party of exceptional repute. Contractor shall submit the third party experience list and resume of persons who would be associated with the study and shall be independent of the Contractor's design/project team.

Contractor shall submit "QRA procedure" prior to start of study.

Quantitative Risk assessment study shall include:

- Identification of events from units and storage area, which could result in loss producing consequences, such as Fire and Explosions Analysis (FEA), Gas and Smoke Dispersion Analysis, toxic release and Non process Hazards Analysis.
- Analysis of the consequences involved
- Plotting of effect zones of various failure scenarios on the plot plan to predict the magnitude and severity of their impact in terms of damage to property and injury to personnel.
- Assessment of risk to installations and individuals within and outside the facility from all situations envisaged
- Estimate of the number of casualties and fatalities
- Recommendations for overall improvement of safety based on the above evaluation
- Recommendations for preventing loss-producing incidents.

The Safety Studies shall document MAEs in terms of:

- Based on these studies, determine the adequacy of the controls for the identified MAEs in a workshop forum or ALARP (As low as reasonably practicable) session. The outcome would be potential RRMs consequence of MAEs and their impact on the facility. The outcome shall be tracked and incorporated into safety studies.

- Assessment of the controls available to prevent an MAE or mitigate its consequences should it occur.

- Integration into a quantitative risk assessment (QRA) that shall allow ranking of the identified MAEs and demonstration of the risk levels-with particular reference to Individual Risk levels for exposed personnel.

- Using these Studies, document the critical MAEs in the form of bowtie diagrams (or similar). The bowtie diagrams shall assist in the identification of the controls in place, the need for additional controls and performance standards required.

The requirements of these are detailed in the following sections.

CONSEQUENCE STUDIES

The assessment of applicable MAEs shall be completed by undertaking the following:

- Fire and Explosion Analysis – for ignited hydrocarbon and non-hydrocarbon scenarios
- Gas and Smoke Dispersion Analysis-including un-ignited and toxic gas scenarios, including combustion products
- Non Process Hazards Analysis- associated with all non process type hazards

The outcome from these studies shall be taken forward to the Emergency Systems Review, Escape and Rescue Analysis and Quantitative Risk Assessment.

- For the Fire and Explosion Analysis and Gas and Smoke Dispersion Analysis, the following shall be included:

  - Definition of the flammable inventories, including location, linkages, etc.
  - Definition of the system properties for each flammable inventory (e.g. volume, mass, pressure, temperature, etc)
  - The realization of the identified process hazards, including:

    - Toxic release
    - Flash fire
    - Vapour cloud explosion
    - Jet fire
    - Pool fire
    - Boiling liquid expanding vapour explosions (BLEVE)
    - Toxic combustion products

  - The consequences of these outcomes shall be quantified in terms of the potential impact. This may be on personnel, equipment/emergency systems and emergency response operations.

    Therefore effects shall be modelled in terms of:

    - Potential for flame engulfment or impingement
    - Heat radiation levels
    - Explosion overpressures
    - Toxic concentrations

- For the non process hazards identified in the HAZID, assess the potential for impact on personnel and the potential for escalation to a hydrocarbon release, emergency systems and evacuation and rescue systems.

  The non process hazards would be identified in the HAZID and include issues such as:

  - Transportation (for example helicopter, vehicle transport to service facilities, etc)
  - Offshore Marine activities
  - Dropped Objects
  - Extreme Weather conditions
  - Third Party sources of interference

As part of the Safety Studies Methodology, the contractor shall be responsible for developing the criteria to be used in the Safety Studies (i.e. impairment criteria for personnel and equipment). The criteria shall be reviewed and agreed with Company prior to use.

The contractor shall develop the appropriate methodology for completing the consequence analyses. As a minimum, the contractor shall ensure:

- That all consequence modeling software and techniques are to an approved standard. Any software modeling tools used shall be validated and where not covered by pre-existing confidentiality requirements, the models made available to the Company
- All process data used in the consequence studies shall be sourced from the engineering teams and logged and recorded as Assumptions for purposes of traceability.
- All acceptance criteria are documented and traceable
- All data sources used for risk based information shall be quoted and the data sources provided as part of the Assumptions Register
- All assumptions shall be recorded and approved as part of the Assumptions Register

EMERGENCY SYSTEM REVIEWS

Based on the consequence analysis and the criteria developed as part of the Safety Studies Methodology, the effectiveness of systems and features for preventing or mitigating consequences shall be assessed. Systems and features to be considered include (but are not limited to):

- Fire and gas detection systems
- Emergency Shutdown (ESD) and blow down systems
- Active fire protection system (e.g. deluge valve, ring main, monitors, fire hydrants and foam facilities)
- Plant layout and separation distances
- Equipment design
- Emergency response

The review of the Emergency Systems shall include consideration of the following:
- Emergency systems critical for each MAE
- Potential impairment of emergency systems due to the MAE.
- Redundancy/ fail safe nature of the emergency systems
- Duration that Emergency Systems are required to remain functional for

ESCAPE AND RESCUE ANALYSIS

The contractor shall examine the potential for impacts on the designated escape, safe muster, evacuation and rescue facilities and systems provided.

In the event of an MAE, those personnel surviving the initial incident shall be able to escape from the facilities in a safe and controlled manner and where appropriate be promptly rescued and taken to a place of safety.
The assessment shall include but not be limited to:

- Estimation of evacuation times

- The vulnerability and frequency of impairment of the facility escape routes
- The vulnerability and frequency of impairment of the muster areas
- The vulnerability and suitability of the evacuation systems
- The effectiveness of Emergency Response systems

QUANTIFIED RISK ASSESSMENT

The objective of the QRA is to assist the overall process in determining the:

- Relative ranking of the identified MAEs and there contribution to the facility risk profiles
- Facility worker Individual Risk Per Annum (IRPA)
- Risk posed by the facility on all worker groups through PLL
- Based on the above results, discuss the implications and major contributors to the facilities risk profile and where applicable identify potential risk reduction measures

The risk quantification process shall be based on accepted methodology (such as the development of event and fault trees). While this Safety Studies Plan does not dictate the methods for QRA to be used, the following guidelines shall be considered:

- Where proprietary packages for the integration of risk are used, the package must have independent validation and the input files must be made available to the Company at the completion of the Safety Studies.
- All inputs used in a proprietary package and the methods employed in the integration of risk must be clear and documented in the Assumptions Register. Independent validation of calculations used in the proprietary packages must be possible.
- If an event tree analysis is used there must be sufficient supporting documentation to enable independent check of the logic and assumptions used in the event tree development.

As part of the Safety Studies Methodology, relevant QRA "rulesets" shall be developed. The rulesets shall govern issues such as the frequency of the initiating event and the various probabilities required to calculate the frequency of an outcome (such as a fatality) associated with each MAE. The rulesets shall include but not be limited to:

- Potential for a release (using a Parts Count or similar method)
- Size of release and probability split by hole size
- Probability of ignition
- Population distribution
- Probability of fatality impact
- Probability of equipment damage given an impact
- Reliability of emergency systems
- Probability of a specific outcome such as a dropped load or helicopter crash with appropriate reference
- Potential for escalation

- Probability of successful mitigation systems
- Potential human factor issues

As a minimum following documents/ information/ services/ assistance may be considered as guide for carrying out the study:

- Description of the facilities.
- Material balance showing stream composition & operating parameters (Pressure, Temperature, flow and other physical properties)
- Process Flow Diagrams
- Piping & Instrumentation Diagram
- Major inventory storage details like material stored, quantity and dimensions of equipment
- Equipment / instruments data sheets for the facilities under scope of studies
- Meteorological Data for the past 10 years
- Soft and hard copy of the overall plot plan depicting all major units and adjacent facilities
- Isometric diagrams
- Area map / key plan showing adjacent facilities
- Population details within and around the facility
- Traffic data of ships within and adjacent to the facility.

The contractor shall provide the name and brief description of the computer software proposes to use for study. Software of international repute shall be used.

At the end of the study, a report shall be generated. The report will comprise the conclusions of the study and include suggestions / recommendations for mitigating the effects of the hazards.

Implementation of the recommendations and any required statutory clearances will be contractor's responsibility without any time and cost impact to company. The contractor shall prepare and submit the "Action Taken Report" on the recommendations.

4.1.8 Critical Controls

Following completion of the Safety Studies and QRA, the contractor shall, as an outcome, document the controls identified in the assessment of an MAE and where appropriate identify critical controls.

It is anticipated that the contractor shall, for the significant risk contributors identified in the QRA, develop Bowtie diagrams (or similar). The Bowtie diagrams for the significant MAEs shall assist in the understanding of the controls and their importance to the MAE. The Bowtie diagrams shall be used in the communication of the Safety Studies outcomes as part of the ALARP process. The Bowtie diagrams should:

- Provide a pictorial representation of the hazards that can cause an MAE occurring

- Detail the barriers (control measures) that prevent the occurrence of the MAE
- Show the mitigating systems that minimize all the potential consequences of the MAE (e.g. .fire, gas release, explosion, etc)
- Facilitate the identification of safety critical controls

Bowtie diagrams are a means of displaying the number of control and mitigating measures available, in order to assist in determining whether the existing systems are adequate and that the risk of the MAE occurring is ALARP or whether further measures are required.

- During the early state of the construction phase of the project an update ALARP review shall be conducted including an increased Company Operator input. At this stage, any additional risk reduction measures shall be worked, with particular focus on the operational aspects of the project.

Attendees shall be drawn from design engineering, construction, maintenance and operations, plus other interested parties as necessary. For all MAEs identified in the HAZID and subsequently assessed, the team shall review the following information:

- QRA output documenting the ranking and contribution of MAEs
- The HAZID Register sheet for the MAE, updated to show any adjustment in assessed risk as a result of the Safety Studies
- Supporting data on the control and mitigating systems

4.1.9 The ALARP workshops shall:

- Assess the risk associated with each MAE
- Determine whether the risk associated with each MAE is ALARP
- Determine whether the existing control and mitigating measures are adequate
- Confirm safety criticality of control measures
- Apply brainstorming to propose additional measures. These shall be recorded in the Risk Reduction Register for action.

4.1.10 Escape, Evacuation & Rescue Analysis (EERA)

For Escape, Evacuation and Rescue Analysis (EERA) study, contractor shall arrange a third party. The party shall have done similar study independently or through subsidiaries (not through technical support of any other party on MOU/technical collaboration) for at least one offshore oil & gas complex and one rig with a capacity of minimum 50 persons in India or internationally in last 10 years. The project manager for the study shall have 10 years experience in offshore facilities safety and risk management services. The party shall be independent of the Contractor's design/project team.

4.1.10.1 Objectives of EERA

As stated by the Prevention of Fire and Explosion and Emergency Response (PFEER) Regulations the assessment of EER Systems should be performed as may be appropriate and should include.

Identification of the various events which could give rise to:-

- A major accident involving fire and explosion and
- The need for EER to avoid or minimize exposure to a major accident
- The evaluation of likelihood and consequences of such events.

The establishment of appropriate performance to be attained by anything provided by measures to:-

- Ensure effective EER to avoid / minimize exposure to major incident.
- Protecting personnel from a major accident involving fire of explosion.
- The selection of appropriate measures.

Escape, Evacuation & Rescue Analysis (EERA) shall be carried out by third party of exceptional repute and shall meet the following requirements. Contractor shall submit the third party experience list and resume of persons who would be associated with the study and shall be independent of the Contractor's design/project team.

- The party shall have done similar study independently or through subsidiaries (not through technical support of any other party on MOU / technical collaboration) for at least one offshore oil & gas complex and one rig with a capacity of minimum 50 persons in India or internationally in last 10 years.
- The approach for the study shall be HAZOP based and include the goals & guide words stated in the methodology.
- The project manager shall have 10 years' experience in offshore facilities safety and risk management services.
- The deliverables shall include those stated in scope.

4.1.10.2 Scope of Work

4.1.10.2.1 The Purpose

The purpose of this activity is to review escape routes for the offshore platforms/rigs based on credible events from the fire and explosion analyses to ensure that:

- There are adequate means of events.
- Egress is not prevented from each area upon realization of the most extreme credible event in that particular area.

- Assess the ability to recover injured personnel in the event of an incident based on typical personnel distributions.

The Escape, Temporary Refuge, Evacuation and Rescue Analysis will also be used to establish the adequacy of the overall layout. The results of the Escape, Temporary Refuge, Evacuation and Rescue Analysis will be available to be incorporated into the overall Unit layout design Layout considerations might include.

- Ignition sources
- Limited human factors considerations
- Escape, evacuation and rescue
- Reduction of overpressure from explosion.

4.1.10.2.2 The Activities

➢ Review and develop the overall layout of the escape and evacuation system for the unit with regard to ignition sources, smoke, gas, toxic fumes, human factors, occape, evacuation and reduction of explosion overpressure.

➢ To review and develop the overall layout of the escape ad evacuation system to reduce risks to persons and the environment in major accident events upon the Unit to an acceptable level and/or applicable industry standards of design practice.

➢ Development of EERA document/manual including Safe Operating practice and Emergency operations bring out the following :

- Basis of EERA
- Evacuation pathways and layout
- Sequence of actions
- Operational command and control during emergency (Emergency organization and Responsibilities) etc.

➢ Adequacy check of life saving Appliances, evacuation and rescue facilities.

Broadly the following activities that need to be performed:

- Identify those events which may necessitate escape, evacuation and rescue of personnel.
- Identify escape route locations and define escape routes for typical population distributions on the vessel.
- Generate a matrix of escape routes that define the routes from each populated area. This will be achieved by dividing the platform/rig into section that have to be traversed to facilitate egress.
- Identify temporary refuge (TR) and alternative muster area locations.

- Define egress threatening scenarios.
- Based on the defined egress routes prepare a matrix of blocked egress routes for egress threatening hazards.
- Compare the required egress routes to facilitate an evacuation with those blocked by the various egress routes threatening hazards the ability to escape from populated areas to the main deck or alternative muster area.
- Asses the ability to safely recover injured personnel based on the remaining egress route permitting access to the affected areas.
- Combine the likelihood of the egress route threatening scenarios from the Fire Risk Analysis and the egress route impairment and calculate the frequency of egress route impairment. Use a risk ranking process to propose mitigation measures for those events contributing most to the egress impairment frequency.
- Systematically address the effects of accidental events on the adequacy and availability of the EER system to perform their intended functions on the platform.
- To carry out an EERA workshop with user groups for appraisal of the evaluation of existing facilities, discussion and finalization of the recommendations.

4.1.10.2.3 The Methodology

EERA study will be performed using a goal analysis methodology. The work scope includes the followings:

Goal Analysis – The objects of the goal analysis is to confirm the adequacy of the EER facilities and arrangements and identify any area of weakness. There are seven (7) EERA goals which will be assessed in the EERA.

Goal 1 (Alarm) – All personnel are made aware in a timely manner that an accident has occurred.

Goal 2 (Escape) – All personnel are able to escape to muster station without undue risk.

Goal 3 (Muster) – The temporary refuge can remain habitable for sufficient time to enable mustering communications and controlled evacuation if required.

Goal 4 (Decision to Evacuate) – All personnel are made aware in a timely manner of the decision to abandon the installation.

Goal 5 (primary Means of Evacuation) – Suitable means of evacuation is provided to allow personnel to abandon the facility without undue risk.

Goal 6 (Secondary Means of Evacuation) – Alternate means of evacuation is provided should the primary the primary mode of evacuation be impaired.
Goal 7 (Rescue) – Adequate means exists to rescue personnel and transport them to a safe location.

An evacuation time analysis – The objective of the evacuation time analysis is to assess if the muster area and evacuation facilities are able to endure fire and explosion events for the period required for the POB to evacuate.

The methodology to be employed for this study should primarily be as follows:

- Review the findings of the HAZID exercise and identify those events likely to require escape temporary refuge evacuation and rescue of personnel.
- Assess the consequences of each hazardous event to determine whether flames, smoke, gas or oil releases, physical damage or any other factors impede the operator's ability to escape from the area of the incident.
- Assess the area attached by heat, smoke, flames or gas and assess the effect of wind direction. Do these factors prevent personnel from reaching the evacuation points directly from the work place?
- Check if the movement of personnel is threatened assess the duration of the hazardous event.

Estimate the probability that:

- Personnel in the area of the event can reach the evacuation point.
- Personnel who cannot reach the evacuation point have an alternative escape (and evacuation) route available to them.

4.1.10.2.4 EERA to estimate Impairment frequencies of Residual Accident Events :

The Escape Evacuation should sum up the impairment frequencies of the Residual Accidental Events which will address the specified safety in the defied hazards groups.

4.1.10.2.5 EERA to be evaluated on Performance Based Criteria with respect to prevailing international bench mark index and practices.

The elements of Performance based criteria are

a) Design adequacy of Escape, Evacuation and Rescue Mechanism to meet the eventually.
b) Performance
c) Reliability
d) Availability

4.1.10.3 Deliverables

An easily comprehendible comprehensive Escape Evaluation and Rescue Analysis Report consisting of but not limited to the following

- Identification of Major Accident Events.
- Identification of Escape Routes and evacuation facilities for population on the platform/rigs.
- Adequacy check of existing refuge areas, escape routes, evacuation facilities, Life Saving appliances and rescue facilities.
- Details of blocked escape routes.
- Recommendations for improvement of escape and rescue facilities.

Report should

- Summarize adopted methodology.
- Activities to be undertaken to improve TEMPSC Evacuation.
- Critical analysis of the Operability of evacuation and Escape Methods under Various Accident Circumstances.
- Probability of Evacuation Success
- Improving Survival Times
- Reducing recovery times.

4.1.10.3.1 As a minimum following documents/ information to be considered as guide for carrying out the study:

- Process Design Basis
- Number of personnel on the platform/rigs.
- PFD
- P&ID
- Equipment Layout
- Escape Route Plan

Any other related studies leading to the EERA study is to be carried out by the bidder.

The approach for the study shall be HAZOP based and include the goals & guide words stated in the methodology.

5.0 DOCUMENTATION

All the Safety Studies conducted by the contractor shall be fully documented and submitted to the Company for review. On review comments if any, shall be incorporated and reissued to the Company.

Detailed calculations shall not be issued to the Company for review. However the Company may audit/review any calculations performed as part of the Safety Studies. Any findings from these audits/reviews shall be implemented by the Contractor.

Following completion (including Company review and comment incorporation) of the Safety Studies, a comprehensive dossier comprising all information (including reports, calculations, drawings and registers) shall be provided to the Company.

Corporate Risk Matrix

Consequence					Increasing Probability			
					A	B	C	D
Severity Rating	People	Asset	Environment	Reputation	Has occurred in E&P industry	Has occurred in operating company	Occurred several times a year in operating company	Occurred several times a year in location
0	Zero injury	Zero damage	Zero effect	Zero impact	Manage for continued improvement (LOW)			
1	Slight injury	Slight damage	Slight effect	Slight impact				
2	Minor injury	Minor damage	Minor effect	Limited impact				
3	Major injury	Local damage	Local effect	Considerable impact				
4	Single fatality	Major damage	Major effect	Major national impact	Incorporate risk reducing measures (MEDIUM)		Fail to meet screening criteria (HIGH)	
5	Multiple fatalities	Extensive damage	Massive effect	Major international impact				

Note: Table gives an indication of risk tolerability in general terms

FUNCTIONAL
SAFETY SPECIFICATION

PREPARED BY	REVIEWED BY	APPROVED BY	TOTAL PAGES	DATE	REV. No.
BG	NM	AJ	64	06.07.2017	4
NG	VBD	PKM	59	05.12.2011	3
KS	VBD	JSS	44		2
AKM	SKG	JSS	44	17.02.05	1

CONTENTS

1. INTRODUCTION

   1.1 Scope

2. DEFINITIONS/LANGUAGE

3. STANDARDS AND SPECIFICATIONS

   3.1 Safety Studies/Risk Assessment
   3.2 International Standards

4. INHERENT SAFETY FEATURES

   4.1 Structural Protection
   4.2 Topside and Field Complex Layout
   4.3 Pipeline and Riser Design
   4.4 Release Sources
   4.5 Control of Ignition Sources

5. FIRE ZONES

6. TEMPORARY REFUGE

7. EMERGENCY CONTROL CENTRE

8 FIRE AND GAS DETECTION SYSTEMS

   8.1 General
   8.2 Gas Detection
   8.3 Fire Detection
   8.4 ESD & Deluge Push buttons
   8.5 Cable Routing
   8.6 Fire and Gas Control System
   8.7 Radio Interference Requirements

9. SHIP COLLISION DETECTION SYSTEM

10. EMERGENCY CONTROL SYSTEMS
   10.1 General
   10.2 Emergency Shutdown System
      10.2.1 General
      10.2.2 Hydrocarbon Inventory Isolation
      10.2.3 Hydrocarbon Inventory Blow down
   10.2.4 Pipeline and Riser Inventory Isolation
   10.3 Navigational Aids
   10.4 Emergency Lighting

10.4.1 General
10.4.2 Emergency Lighting
10.4.3 Escape Lighting
10.5 Ventilation and Pressurization system
10.6 Emergency Power Supplies
10.7 Battery Backed Power Supply system

11. FIRE CONTROL AND MITIGATION

11.1 Passive Fire Protection System
11.1.1 General
11.1.2 Fire Division, Walls and Boundaries
11.1.3 Fire Protection of Vessels and Equipment
11.1.4 Fire Protection of Shutdown Valves
11.1.5 Fire Protection of Supports for Vessels
11.1.6 Fire Protection of Structural Steels
11.1.7 Passive Fire Proofing Materials

11.2 Active Fire Protection (Fire Water) Systems
11.2.1 General
11.2.2 Fire Water Pump
11.2.3 Firewater Ring-main
11.2.4 Deluge system
11.2.5 Deluge Valve Sets
11.2.6 Deluge Control Panel
11.2.7 Firewater monitor
11.2.8 Foam System
11.2.9 Hydrant
11.2.10 Firewater/Foam Hose reels
11.2.11 Equipment Cabinets

11.3 Gaseous Fighting System
11.3.1 General
11.3.2 Carbon dioxide firefighting system
11.3.3 Clean Agent firefighting system
11.3.4 Portable and wheeled trolley mounted fire extinguisher
11.3.5 Kitchen hood fire suppression system

4

11.4 Fire rescue equipment
11.5 Flame Retardant Furnishings
11.6 Electric Power & Control Cables
11.7 Pneumatic and Hydraulic Control Lines
11.8 Secondary Sources of Smoke

12. EXPLOSION CONTROL AND MITIGATION
12.1 General
12.2 Explosion Overpressure Loads
12.3 Drag Loads

13. PLATFORM ALARMS AND COMMUNICATION SYSTEMS

13.1 Overall Platform Alarm Philosophy
13.2 Alarm Types
13.2.1 General Platform Alarm
13.2.2 Abandon Platform Alarm
13.2.3 Beacons
13.2.4 Alarm Loops

14. ESCAPE AND EVACUATION
14.1 Escape and Evacuation Philosophy
14.2 Muster Areas
14.3 Escape Routes
14.3.1 General
14.3.2 Escape Ladders & Scramble Nets
14.3.3 Escape Route Marking and Lighting
14.4 Lifeboat
14.5 Life rafts
14.6 Life Jackets and Marine Work Vest
14.7 Lifebuoys
14.8 Personal Survival Equipment
14.9 Safety Signs & Safety Plans
14.10 Platform Identification Signs
14.11 Dropped Object and Swinging Load Protection
14.12 Personnel basket and Scramble Net
14.13 Turbine Exhaust Stack

15. OCCUPATIONAL SAFETY REQUIREMENTS

15.1 Fire Fighting and Rescue Equipment
15.2 Breathing Apparatus (BA) Sets, Fire Blanket and Fire Man Outfit
15.3 Stretchers
15.4 Eye Wash and Safety Showers **and Portable Eye Wash**
15.5 First Aid
15.6 Noise Limits
15.7 Helicopter Rescue Kit
15.8 Vibration Limits
15.9 Hot Surfaces Protection
15.10 Personnel Protection Equipment (H_2S Exposure)

16 WARRANTY

17. HAZARDOUS SUSBSTANCES
17.1 Storage Requirements
17.2 Handbook

1. INTRODUCTION

1.1 Scope

This document defines the operational safety requirements for all the aspects of the Contractor's Works as defined in scope of work and design criteria given elsewhere in the bid.

2. DEFINITIONS/LANGUAGE

In this document:

- The use of "shall" indicates a mandatory requirement
- The use of "should" indicates a guideline that is strongly recommended
- The use of "may" indicates a guideline that is to be considered

The following abbreviations are used in this document:

AFFF	Aqueous Film Forming Foam
ALARP	As Low As Reasonable Practicable
ANSI	American National Standards Institute
APA	Abandon Platform Alarm
API	American Petroleum Institute
BA	Breathing Apparatus
BDV	Blow Down Valve
dB	Decibel
DCS	Distributed Control System
DNV	Det NorskeVeritas
F&G	Fire and Gas
GPA	General Platform Alarm
IALA	International Association of Marine Aids to Navigation and Lighthouse Authorities
IEC	International Electro-technical Commission
IER	Instrument Equipment Room
IR	Infra-Red
LRFD	Load and Resistance Factor Design
MAC	Manual Alarm Call point
MCC	Motor Control Centre
MSDS	Material Safety Data Sheet
NFPA	National Fire Protection Association
ONGC	Oil and Natural Gas Corporation Ltd.
PFP	Passive Fire Protection
RP	Recommended Practice
SCADA	Supervisory Control and Data Acquisition
SDV	Shutdown Valve
UK HSE	United Kingdom Health and Safety Executive
UV	Ultra Violet

4

3. STANDARDS AND SPECIFICATIONS

3.1 Safety Studies/Risk Assessment

The requirements of this document represent the minimum acceptable requirements. The findings of the safety studies/risk assessments may mandate additional requirements (above those stated in this document) for the safety/firefighting, etc systems.

3.2 International Standards

The work shall be designed in accordance with the standards and specifications listed below, except where varied by agreement.

ANSI	Z358.1	Emergency Eyewash and Shower Equipment
API	6FA	Specification for Fire Test for Valves
API	2030	Application of Fixed Water Spray Systems for Fire Protection in the Petroleum Industry
API	RP 2A-LRFD	Recommended Practice for Planning, Designing and Constructing Fixed Offshore Platforms – Load and Resistance Factor Design
API	RP14C	Recommended Practice for Analysis, Design, Installation and Testing of Basic Surface Safety Systems for Offshore Production Platforms
API	RP14F/14FZ	Recommended Practice for Design and Installation of Electrical Systems for Fixed and Floating Offshore Petroleum Facilities for Unclassified and Class 1, Division 1 and Division 2 Locations
API	RP14G	Recommended Practice for Fire Prevention and Control on Open Type Offshore Production Platforms.
API	RP 14J	Recommended Practice for Design and hazards Analysis for offshore production facilities
API	RP500/505	Recommended Practice for Classification of Locations of Electrical Installations at Petroleum Facilities Classified as Class 1, Division 1 and Division 2
API	RP521	Guide for Pressure Relieving and Depressurizing Systems
API	2030	Application of Fixed Water Spray Systems for Fire Protection in the Petroleum Industry
IALA	O-114	Recommendation on the Marking of Offshore Structures
IEC	60027	Letter Symbols to be used in Electrical Technology
IEC	60331	Tests for Electrical Cables under fire condition
IEC	60332-3	Head and Oil Resistant, Flame Retardant Cables – Tests on cables under fire conditions
IEC	61508	Functional Safety of Electrical/Electronic/ Programmable electronic safety-related systems

IEC	61511	Functional Safety- Safety Instrumented Systems for the Process Industry Sector.
IMO		International Convention for the Safety of Life at Sea (SOLAS)
IMO		Life Saving Appliances Code
IMO		Symbols for Fire Control Plans
ISA	RP92.002 Part II	Installation, Operation and Maintenance of Toxiv Gas Detection Instruments: Hydrogen Sulfide
ISA	S92.0.01 Part I	Performance Requirements for Toxic Gas-Detection Instruments: Hydrogen Sulfide
ISA	84	Functional Safety- Safety Instrumented Systems for the Process Industry Sector.
ISO	3864	Safety Colours and Safety Signs
ISO	6309	Fire Protection-Safety Signs
NFPA	1	Fire Prevention Code
NFPA	10	Standard for Portable Fire Extinguishers
NFPA	11	Standard for Low – Expansion Foam
NFPA	11A	Standard for Medium-and High-Expansion Foam Systems
NFPA	12	Standard on Carbon Dioxide Extinguishing Systems
NFPA	14	Standard for the Installation of Standpipe, Private Hydrants and Hose Systems
NFPA	15	Standard for Water Spray Fixed Systems for Fire Protection
NFPA	16	Standard For the Installation of Foam-Water Sprinkler and Foam-Water Spray Systems.
NFPA	17	Standard for Dry Chemical Extinguishing Systems
NFPA	25	Standard for the Inspection, Testing and Maintenance of Water-Based Fire Protection Systems
NFPA	72	National Fire Alarm Code
NFPA	101	Life Safety Code
NFPA	750	Standard on Water Mist Fire Protection Systems
NFPA	2001	Standard on Clean Agent Fire Extinguishing Systems.
USCG-	320	"Rules and Regulations for Artificial Islands and Fixed Structures on the Outer Continental Shelf".
BSI-486	British Statutory Instruments - No 486 ".	"The Offshore Installation (Life Saving Appliances) Regulations
SOLAS		Specifications of the International Convention on Safety of Life at Sea (SOLAS), i.e. the 1974 Convention, the 1978 protocol and 1981 and 1983 amendments.
NIOSH		National Institute of Occupational Safety & Health
UK HSE	QTO2001/068	Offshore Technology Report-Noise and Vibration
IS	8442:2008	Functional Requirement for stand post type water and foam monitor for fire fighting
IS	2190	Code of practice for selection, installation and maintenance of fire extinguishers
IS	2171	Portable Fire Extinguisher dry powder (Cartridge type)
IS	2878	Specification for Fire Extinguishers, Carbon di oxide type (Portable and Trolley mounted)

4. INHERENT SAFETY FEATURES

4.1 Structural Protection

4.1.1 General

All major load carrying structural elements which can be damaged by fire shall be protected. Supports, foundations and other load bearing structures for pipes, vessels and other process equipments that may be exposed in a fire and where collapse will have great consequences shall be protected. Mandatory safety requirements shall be met.

4.1.2 Accidental loads

Accidental loads such as fire and explosion, impact loads shall be considered and their magnitude shall be determined by a 'Concept Evaluation Study'/Safety Studies.

a) Fire And Explosion

- Structural design should be in such a manner that the effects of fire and explosion are reduced.

- Changes in the properties of materials caused by fire and explosion shall be taken into account at the time of selection of material.

b) Impact load

i) Collision

- The collision loads as determined by Concept Safety Evaluation/ Safety Studies/ Risk Assessment based on the actual masses, velocities and directions of ships/vessels which may collide with the installation shall be accounted in the design. Collision shall be considered for all the elements of the installation, which may be hit either by sideways, bow or stern collision.

ii) Dropped objects

- Loads from the following types of objects shall be considered for safety requirement, but not limited to

  - Falling cargo
  - Falling equipment while lifting/ handling
  - Unintentional swinging objects

  Consideration shall also be given for objects falling through water, which may hit submersed members/ facilities of the platform.

4.1.3 Structural fire resistance

- The platform structure shall be provided with sufficient passive fire proofing or planned redundancy to prevent structural collapse before evacuation can be done.

- The primary structure shall maintain its load bearing capacity during a designed accidental fire for a period required for safe evacuation. The time shall be found from safety risk analysis and acceptable codes/standards.

- As a minimum the requirements of more onerous of API RP 2A-~~LRDF~~ LRFD, Structural Design Criteria and relevant bid requirements given elsewhere shall be complied with.

4.2 Topside and Field Complex Layout

The following design features shall be included:

- All areas shall be arranged in such a way that the consequences of fire and explosion are minimized.

- Hazardous equipment shall be segregated from the frequently manned areas on the Platform. Separation distance between the platforms shall minimize the potential for escalation from one platform to another. (For bridge connected platforms of a process complex.)

- Conference room and frequently manned areas on the new platform shall be located as close as possible to the bridge.

- The facilities on platform shall be located in such a way that higher risk area shall be leeward to the prevailing wind direction to provide maximum ventilation and also to minimize potential explosion overpressure.

- Platform layout shall minimize the potential for dropped objects and swinging loads to impact process equipment leading to losses of containment.

- The requirement for fire and blast divisions shall be established during detailed design phase by the Contractor. The requirement for fire and blast divisions shall be considered in terms of the positive benefits such as reduction of escalation and the disadvantages such as potentially adverse ventilation/explosion overpressure effects associated with them.

- Clearance and accessibility around major items of equipments should be optimized with particular regard to
  - Accessible manned fire fighting
  - Escape in a safe and effective manner

- Reduced possibility for exposure of equipment in the event of fire
- Operation and maintenance

- Equipment and piping shall be properly supported to keep the stresses to the minimum. Loops shall be provided in piping to limit the stress and stress analysis is to be carried out.
- For sour services NACE codes shall be followed.
- Separate drain shall be provided for sour hydrocarbon.
- For bridge piping Platform movement has to be considered to keep the stress within limit.

4.3 Pipeline and Riser Design

The platform layout and Field Complex Layout shall take consideration of the location of pipelines so as to minimize the potential for dropped objects to impact pipelines.

Any requirements for pipeline dropped object protection shall be established during detailed design phase by the Contractor.

4.4 Release Sources

The design of the production facilities shall minimize the number of sources for hydrocarbon release as far as reasonably practicable. This shall take consideration of operational and maintenance requirements, together with any requirements associated with tie-in of future equipment.

Measures that may be taken to achieve this include, but are not limited to:

- Minimize hydrocarbon inventories
- Isolation and blow-down of hydrocarbon inventories to minimize the quantity that may be released.
- Fuel gas pipe work shall be of all welded construction in non-hazardous areas. An exception to this may be the single flanged fuel connections.
- Adequate isolation/venting/drainage to enable safe maintenance
- Instrument and mechanical systems to protect against the possibility of pressure/temperature excursion outside of the design basis.

4.5 Control of Ignition Sources

The design of the facility shall minimize the likelihood of ignition of released hydrocarbons as far as is reasonably practicable.
Measures that shall be employed to achieve this include, but are not limited to:

- Hazardous area classification and equipment layouts shall be developed in accordance with API RP 500 / IEC-60079-10.

- Equipment required to operate during emergencies (e.g. Fire & Gas, ESD, etc) shall be suitable for operation in Class 1 Division 1, Gas Group D, T3 Temperature Class or Zone-1, Group IIA / IIB. T3 Temp. Class hazardous areas.

- Maximum practical separation between flammable materials and known ignition sources shall be achieved

- Exhaust outlets, air ventilation and combustion air intakes for combustion machines shall not be located in hazardous areas.

5. FIRE ZONES

The Platform shall be segregated into a number of separate fire areas to facilitate the design of the fire protection, fire and gas detection, emergency shutdown, and alarm systems. The fire areas shall be defined by natural boundaries such as firewalls, solid decks or the extremities of the platforms.

The designation of fire zones shall be in accordance with NFPA 1 and NFPA 72.

Unique identification references shall be allocated to each fire area. These shall be used in the design of the control systems to assist the identification of an incident location.

Each fire area shall have fire detection and protection systems appropriate to the hazards present within the area.

6.0 Temporary Refuge/Safe Shelter:

Temporary Refuge (TR)/safe shelter shall be provided as per scope of work. However, contractor to carryout risk analysis and based on the recommendation of the safety studies and evacuation procedure the capacity/size, number and location of the TR shall be ascertained during detailed engineering. Construction of the TR shall be blast proof and shall able to sustain fire for a period of minimum 30 minutes. TR shall be protected from hydrocarbon gas ingress by pressurization or auto shutdown of ventilating air intake with no part opening directly on to hazardous area. The TR shall be equipped with command/control & communication, monitoring & mustering, medical facilities and Personal protective equipment. The requirement for protection of lifeboat and life raft embarkation stations and personnel mustering in these areas (Ref .sections 14.4 and 14.5 of this FS) shall be established during the detailed design phase by the Contractor.

7. EMERGENCY CONTROL CENTRE

An Emergency control center shall not be provided on the platform. However, communication facilities shall be provided at the life boat and life raft embarkation station. (See section 14.3 and 14.4)

8. FIRE AND GAS DETECTION SYSTEMS

8.1 General

The Fire and Gas Detection systems shall automatically start active fire protection systems as appropriate, initiate shutdowns and alarm personnel both audibly and visually throughout Platform of a fire (incipient or confirmed) condition or a hydrocarbon gas or a toxic gas release. The required functions/actions on fire and/or gas detection shall be confirmed during detailed design phase by the Contractor.

All components of the Fire and Gas Detection systems shall be type approved by UL / FM and with a proven performance in an offshore environment.

The Fire and Gas Detection systems shall be designed and installed in accordance with API 14C, API 14G, NFPA 1, NFPA 72E, ISA, instrument design criteria and fire and gas detection functional specification.

The Fire and Gas Detection system shall be reviewed in accordance with IEC61511 / 61508, ISA 84.

8.2 Gas Detection

Combustible gas detectors shall cover all combustible gas processing / handling facilities envisaged in the project. Combustible gas detectors shall be high reliability Infra-red (IR) type; catalytic type gas detectors shall not be used.

Toxic gas detectors shall cover all toxic gas processing / handling facilities envisaged in the project. Toxic gas detectors shall comply with API 14C, ISA S92.0.01 Part 1 and ISA RP92.0.02 Part II.

8.3 Fire Detection

Fire detectors shall cover all applicable facilities envisaged in the project.

The following types of fire detectors shall be provided:

- Combination Infra-red (IR)/Ultra violet (UV) flame detectors
- UV flame detectors
- Heat detectors – rate compensated point source type or linear heat detection type.

- Fusible plugs and
- Smoke detectors-ionization type or optical type

The type and provision of fire detectors shall be established by the contractor during detailed engineering with deliberation of safety studies and based on the requirements of relevant bid documents.

The automatic fire detection system shall be supported by manual call points distributed about all the facilities as envisaged in the project to enable personnel to raise an alarm.

8.4 ESD/FSD & Deluge Valve Pushbuttons (Pneumatic)

FSD/ESD initiation and deluge valve release pushbuttons shall be strategically located on the Platform. The locations of these pushbuttons shall be established during detailed design phase by the Contractor based on the requirements of relevant bid documents.
To locate the push buttons accidental pulling of the manual stations shall also be considered and protect/means to be provided to avoid accidental pulling of the manual station.

8.5 Cable Routing

Where two or more fire or gas detection/protection wiring loops exist within an area, diverse cable routes shall be employed where practicable. For fire detection/protection devices located within process fire zones and any area conveying or processing hydrocarbons, the cabling shall be routed equally along opposite sides of the Complex.

On fire detection loops several detectors are capable of being connected in a loop. Therefore each detector within a loop shall be staggered across the complete fire zone so that if one cable route is damaged partial cover shall be ensured within the fire zone and shall not be confined to any one sector.

Gas detectors shall be connected individually back to the Fire and Gas system. Wherever practical 50% of the gas detector cover throughout a single zone shall be routed along one side of the platform and 50% along the other side. This arrangement shall ensure partial cover if any one cable is damaged, with cover within the area to be spread throughout the fire zone on a horizontal and vertical basis, and not confined to any one sector.

The fire/flame resistant requirements for cabling are indicated in Section 11.6.

8.6 Fire and Gas Control System

The fire and gas controls and logic shall be as per requirement of Basic Bid Work-Instrumentation given in Bid Package.
As a minimum the system shall comply with the following:

- Indication of the status of the fire and gas detection systems including the locations of detectors, manual alarm call points, the concentration of gas detected by any gas detector and fault annunciation and alarm.

- Indication of the status of the fire protection systems, including the fire pumps and push buttons for manually operating these systems.

- Control to enable the manual and automatic initiation of alarms, shutdown levels and fire extinguisher release.

- Logic to provide executive actions for general and local platforms alarms, shutdown systems, HVAC system and fire protection systems.

- Direct interface with the ESD logic

- The fire and gas system shall be designed such that the failure of any detector or detector loop shall result in a fault alarm.

- All cabling to fire and gas detection and protection equipment shall be line monitored for open and short circuits.

- Hard-wired critical alarms annunciators in the control room

8.7 Radio Interference Requirements

All equipment specified within the fire and gas system design shall be such that:

- The operation of the system and detectors does not interfere with the facilities of radio communications

- The facilities radio communications do not cause spurious signal within the fire and gas system

With coverage of 4.4 & 4.5, 5, 6, 7 and 8 a small handbook incorporating checklist as a helping tool for monitoring shall be submitted by the contractor, which shall include release sources, control of ignition sources, fire zones, temporary refuge, emergency control center, essential needs etc. along with mitigation plans.

All concerned installation/ vessels/ work places shall ensure availability of breathing air supply with hygiene care along with specific breathing air filling system. A small handbook shall be submitted for wide distribution to all at work centers with emergency contact numbers, including that of coast guards, ODAG, ONGC and Indian Navy**.**

9. SHIP COLLISION DETECTION SYSTEM

The requirement for a ship collision detection system shall be confirmed during detailed design phase by the Contractor based on the findings of the safety studies/risk assessment.

10. EMERGENCY CONTROL SYSTEMS

10.1 General

Emergency Control Systems are defined as safety critical systems required to operate and remain operable on detection of an incident or pending incident. All emergency control systems shall be designed to remain operational for the duration they are required.
They shall be designed to achieve at least one of the following:

- Fail-safe
- Be protected from the effects of the credible major accident scenarios to ensure their continued operation
- Have sufficient redundancy to prevent loss of the system if any part should fail

10.2 Emergency Shutdown System

10.2.1 General

The Emergency Shutdown system shall be designed to fail-safe so that, in the event of loss of any of the controls to the system, the shutdown valves shall fail closed and the blow down valves fail open.

The Emergency Shutdown system shall follow the practices outlined in API RP14C.

The Emergency Shutdown system shall be reviewed in accordance with IEC 61508.

10.2.2 Hydrocarbon Inventory Isolation

Segregation of the process system into separate inventories shall be achieved by the installation of strategically placed shutdown valves (SDVs). The location of the SDVs shall be confirmed during detailed design phase by the Contractor.

All SDVs shall be:

- Fire safe in accordance with API 6FA and
- Fail closed achieved via spring return actuators

The location of shutdown valves shall be selected so that equipment or vessels containing large inventories of flammable gas or liquid may be isolated as close as possible to the equipment itself.

10.2.3 Hydrocarbon Inventory Blow down

Each process inventory shall be reviewed for the requirement for blow down provisions. These requirements shall be confirmed during detailed design phase by the Contractor.

The initiators of blow down (including consideration of manual and automatic blow down) shall be confirmed during detailed design phase by the Contractor.
Where blow down systems are required, as a minimum they shall be designed to depressurize the process facilities to less than 7 bar gauge or to 50% of the design pressure, whichever is lower, within 15 minutes.

In addition, potential vessel failure time due to jet fire impingement shall be determined. Where practicable the blow down systems shall minimize the potential for vessel failures in such scenarios and shall minimize the requirement for passive fire protection on vessels to prevent their failure.

All blow-down valves shall be:

- Fire safe in accordance with API 6FA and
- Fail open achieved via spring return actuators

10.2.4 Pipeline and Riser Inventory Isolation

Allowances shall be made for future installation of risers on the Well Platform. Establishment of requirements for pipeline and riser inventory isolation shall be part of future work and shall not be part of the Contractor scope of work.

10.3 Navigation Aids

The Platform shall be provided as a minimum with warning lights signals in accordance with IALA Recommendation O-114.

The availability of navigation aids may be ensured by the provision of independent redundant units. The navigation aids shall be provided with battery bank at Platform capable of maintaining illumination for a period of 168 hours (SEVEN 'NO SUN' DAYS) following loss of main power.

10.4 Emergency/Escape Lighting

10.4.1 General

Emergency and Escape lighting shall be provided on all escape routes and embarkation/mustering areas, also at strategic locations such as passageways and stairways, in public areas.
Any additional requirements for Emergency lighting in strategic locations, such as instrument/electrical rooms, etc. shall be confirmed during detailed design phase by the Contractor.

All emergency and escape luminaries shall be suitably certified for use in the classified hazardous area.

For further details refer Electrical Design Criteria given elsewhere in Bid Package.

10.4.2 Emergency Lighting

Emergency power to the lighting circuits may be ensured either by the provision of a dedicated emergency power supply or by the provision of battery units for emergency lights which activate upon loss of main power**.**

10.4.3 Escape Lighting

The provision of independent escape lighting units shall provide redundancy in the event of damage to one or more of the units. Escape lighting shall be provided by fluorescent luminaries with self-contained battery back-up. These shall be capable of powering the luminaries for a minimum of 90 minutes following loss of power to the luminaries.

10.5. Ventilation and Pressurization System

Air intakes for the HVAC systems shall be located to minimize the possibility of released gas or smoke being drawn in. The provision of gas/smoke detection at the air intakes and automatic louver/ fan shutdown shall be established during detailed design phase by the contractor.

Exhaust and intakes shall be outside of, and as far as possible from, hazardous areas as defined by the hazardous area classification layouts. 4

The design of HVAC services should provide for a pressure differential, with all access doors closed, of at least 50 Pa in a lower hazard area above that of adjacent higher hazard areas, in order to prevent ingress of flammable/ toxic gases into the lower hazard area.

The HVAC system provided to maintain pressure differential within lower hazard rated area should be capable of ensuring a continuous air flow from the lower hazard rated area to the higher hazard area when doors are open.

Construction of pressurized areas shall ensure low leakage of pressurization air. Adequate pipe or cable seals and airtight construction should be considered in order to achieve this low leakage. Sealing of all external doors, windows and transit into the pressurized rooms shall be designed such that an air change rate of no more than 0.5 air changes per hour is achieved on shutdown of the HVAC system.
Access openings between hazardous and non-hazardous enclosures should be avoided. Where this is not possible the opening should be protected by an air lock or gastight door.

Access openings into / between Class 1 Division 1 (Zone-1) or Class 1 Division 2 (Zone-2) hazardous area would need to be protected by an appropriate airlock(s) or gas tight door(s). The arrangement shall comply with the table below:

Division 1 area opening into a Division 2 area	Where practicable airlocks should be provided. However, when an airlock is not practicable, gastight self-closing doors may be used.
Division 2 area opening into a non-hazardous area.	
Division 1 area opening into a non-hazardous area.	A double door airlock shall be provided whenever possible. If this is not practicable the HVAC system provided to maintain pressure differential would need to be upgraded from a single fan normally used for the arrangements. And to include two 100% duty fans, one running and one standby. Controls would need to automatically start the standby fan on failure of the duty fan or upon prolonged loss of pressure differential, where both would run simultaneously.

Where practicable doors should be positioned so that they do not face a source of hazard.

Fire dampers shall be located at penetrations through fire divisions. The ratings of the fire dampers shall be at least that of the fire division that they penetrate.

10.6 Emergency power supplies

Power to essential systems during emergencies shall be ensured in accordance with statutory requirement and shall include as minimum of the following.

- The provision of cable rated for the type of fire hazards anticipated.
- The provision of dual power feeds from switchboards.
- The provision of independent, emergency power generation feeding separate distribution boards.
- The provision of emergency power by self-contained battery units from which power is drawn upon loss of main power.

Care shall be required in locating the above to ensure that no common failure can result in loss of both primary and secondary sources of supply, e.g. by locating both main and emergency power in the same switchboards.
Emergency loads shall include, but are not limited to:

- Emergency lightning
- Platform control, Emergency shutdown and Fire & Gas systems
- Communication system
- Cooling system as required to maintain satisfactory operation of the platform control, Emergency shutdown and Fire and gas system.
- Ventilation and pressurizing systems
- Auxiliary power for main power generator.
- Instrument air compressor
- Navigational aids, and
- UPS supply, DC Power Supply

10.7 Battery Backed Power Supply systems

Battery systems (either DC supplies or AC UPS) shall be used to supply power to the following systems and equipment.

- Platform Control System
- Emergency Shutdown systems
- Fire & Gas systems
- Switchgear trip controls
- Navigation aids
- Communication systems
- Emergency Communication Systems

Battery systems shall comprise 2X100% battery charger units with 2X50% battery bank.

Battery capacity shall be sufficient to maintain operation of the system or equipment for the durations stated elsewhere in this document. These durations shall be confirmed by the safety studies/ risk assessments conducted by the contractor.

The battery system shall be supplied from both the main Switchboard and the emergency switchboard with the emergency switchboard being additionally supplied via an emergency generator.

The battery systems shall be protected from an incident by locating them in areas designated as non-hazardous and routing cabling so that they are protected from damage.

The system shall be designed to provide maximum segregation and redundancy to avoid common mode failures of the system.

11. FIRE CONTROL AND MITIGATION

11.1 Passive Fire Protection System

11.1.1 General

Based on an assessment of credible fire scenarios, passive fire protection shall be applied to critical structures, boundaries, vessels and equipment. No credit shall be taken for the cooling effects of Active Fire Protection systems on main structural elements when developing the extent of the Passive Fire Protection.

11.1.2 Fire Divisions, Walls and Boundaries

The requirement for and rating of fire divisions, walls and boundaries shall be confirmed during detailed design phase by the Contractor. The requirement for fire and blast divisions shall be considered against the potential adverse ventilation/explosion overpressure effects associated with them.

Penetrations through fire divisions, walls and boundaries shall be suitably designed and constructed in order to maintain the fire rating of the division. Piping passing through firewall shall be sealed with fire retarding sleeve.

11.1.3 Fire Protection of Vessels and Equipment

Process vessels with large inventories, together with their associated hydrocarbon filled pipework and supports shall be evaluated during detailed design phase by the Contractor to determine the 'time to failure' under fire conditions, while considering the effect of blow down and other fire protection methods e.g. water deluge. Where practicable, blow down and active fire protection systems shall be configured to minimize the requirement for passive fire protection. Where it is shown that vessels, pipework and supports may fail before depressurization, passive fire proofing shall be applied as necessary to:

- Vessels
- Pipework between vessels and shutdown/blow-down valves and
- Vessel and pipework supports

The rating of any such passive fire protection shall be established during detailed phase by the Contractor based on Safety studies 4

11.1.4 Fire Protection of Shutdown Valves

All shutdown valves (SDVs) specified within the design shall be designed as fire-safe and shall be of a fail-closed design with spring return actuator. All process blow-down valves (BDV) shall be fire-safe and shall be of a 'fail-open' type. See Sections 10.2.2 and 10.2.3.

11.1.5 Fire Protection of Supports for Vessels

Where a credible fire scenario can lead to escalation and impairment of escape routes caused by collapse of a vessel through the failure of any supporting structure then that structure shall be fire proofed.
The requirement for and rating of any such passive fire protection shall be established during detailed design phase by the Contractor based on Safety studies carried out. 4

11.1.6 Fire Protection of Structural Steel

The requirement for and rating of passive fire protection of structural members shall be established during detailed design phase by the Contractor.

11.1.7 Passive Fire Proofing Materials

Passive fire protection shall provide effective fire protection without introducing additional failure modes, such as corrosion, or inhibiting other safety factors such as inspection.

Passive fire proofing materials shall be either epoxy intumescent, subliming type or fiber containing panels and type approved for the duration and ratings identified.
The materials shall be suitable for use in an offshore environment and shall have an operational life of design life of platform. It is essential that the chosen passive fire proofing material does not degrade by absorbing water. Consideration shall be given to PFP systems that are compatible with hot and cold insulation thus allowing a composite approach rather than two separate systems.

Where applied to deck equipment, the system shall be designed to resist the drag forces of explosion and thereafter to maintain its specified fire rating.

Passive fire proofing materials are to be applied to vessels and valves in such a way that sample inspection of the equipment may be undertaken.

11.2 Active Fire Protection (Fire Water) Systems

11.2.1 General

The objective of the active fire protection systems shall be to contain/reduce the effects of smoke and radiation and extinguish fires as appropriate.

Water Deluge: The primary purpose of deluge systems is to cool areas and equipment that may be affected by radiated heat from a fire and prevents escalation. Water deluge shall be either locally applied as in the case of vessels or provided for general area protection. Water deluge may also be used to protect personnel from radiation at the Bridge crossing and shall be considered at life raft embarkation points.

Water Monitors: Fixed monitors may be used to support fixed fire protection systems to cool process areas and equipment that may be affected by radiated heat from a fire, provide local cooling at jet fire impingement areas on vessels, and prevent escalation. 4

Foam: Foam is used where there is a risk of a pool fire. This includes chemical and oil spillage areas. The objective of foam systems is to extinguish pool fires. Foam may be applied via Fixed monitors or hand held hoses. The foam compound shall be AFFF/AR-AFFF. 4

Fire water systems shall be designed and installed in accordance with the requirements of relevant codes & standards and testing shall be in accordance with the requirements of NFPA 25.

11.2.2 Fire water pumps

The facility shall be provided with firewater pump designed in accordance with NFPA 20. The firewater pump shall be diesel engine driven 4

The firewater pump shall be capable of supplying the maximum credible demand. This demand shall consist of the largest deluge system plus two hydrants (each supplying at least 27 M^3/hr). At this flow rate the system pressure shall be at least 350 Kpa at the most hydraulically remote deluge nozzle (in accordance with NFPA 15).This requirement shall be confirmed by the safety studies / risk assessments to allow for:

- Hydraulic imbalance
- Overlap of spray zones
- Shadow areas requiring additional nozzles.

Back up supply shall be provided by the other fire water pumps located at bridge connected complex via the platform interconnection line in the event of failure of the fire water pump under new platform.

The firewater pump arrangement shall be confirmed as acceptable during detailed design phase based on required firewater flow rate and pressure at the new platform, and the capacity of the existing firewater pumps at other platform and interconnection line.

In addition the contractor shall verify that the firewater pump located on the new platform and the interconnection line is adequate to provide the firewater requirements at other platform.

The firewater pump shall be located as far as practicable from hazardous inventories of the platform.

Each pump system shall be designed so that once started it can only be shutdown manually at the fire pump itself.

Consideration shall be given to the need to cool the diesel engine exhaust gases with water spray.
The firewater pump shall be provided with a day tank for its diesel supply. The day tank shall be provided with a fuel- shut-off valve located close to the tank, which is capable of remote manual operation.

The pump shall be contained in an enclosure or dedicated room and shall be provided with its own fire water suppression and automatic detection system.

If compressed air is used as one of the means of starting the diesel, a dedicated air receiver shall be provided.

Provision shall be made for testing of firewater pumps via an overboard discharge.

It shall be possible to start the firewater pump even if no other systems on the platform are operational.

The firewater pump shall have two independent starting systems.

The air receiver shall be sized for 180 seconds continuous cranking of the pump without recharging.

11.2.3 Fire water Ring-main

A firewater distribution ring-main shall be provided. This shall be located in the optimum location to protect from the effects of hydrocarbon fires and explosions. In process areas this may require the pipe work to be shielded by main steelwork from explosion drag loads and to be suitably restrained by robust pipe supports.

The ring-main shall be provided with sufficient manual isolation valves so that in the event of damage or during repair to one isolatable section, all other points of the ring-main may still be fed by water at the required pressure.

The ring-main shall be designed to accommodate the maximum shut-in head of the pump with no relief valves fitted to protect the pipe work. The ring-main shall be adequate for the vibrations and pressure surges associated with the operation of the system.

The ring-main shall be constructed from corrosion resistant material and in accordance with API 14E. Consideration shall be given to provision of fire resistant coatings to protect piping from fire damage. Material selection shall follow the guidelines presented in API 14 G.

The ring-main shall be sized so that at least 65% of the design pressure for the largest fire scenario at a flow 50% in excess of the design flow can be supplied with one section of the ring-main isolated.

The contractor shall conduct a water hammer/surge analysis to verify that the firewater piping system is adequate for any pressure surges that may occur on firewater pump start, valve closures, etc.

11.2.4 Deluge systems

Deluge system shall be provided to protect the following as a minimum.

- All process vessels
- Process gas compressors module
- Turbine Generator module
- Bridge escape route
- Other equipment determined by the safety studies/ risk assessments to have potential for failure and escalation.

In addition, deluge systems may be used to provide cooling to structural steelwork.

The deluge systems shall be in accordance with NFPA 15, unless specifically noted otherwise.

The deluge systems shall be designed to supply at least the following application rates in accordance with API 2030

Items	Deluge rate (liters/min per m^2 of exposed surface area.)
Air fin coolers	10.2
Compressors, pumps and other hydrocarbon handling equipment.	20.4
Pressure vessel and heat exchangers	10.2
General coverage area	4.1

11.2.5 Deluge Valve Sets

Deluge Valve(s) shall be segregated from the area they are protecting.

Deluge valve(s) shall be of a type that may be configured to control the downstream pressure eliminating the need for pressure reducing orifice plates. The valves shall also be capable of being remotely closed and reopened as required during a fire situation to enable the firewater to be diverted to the most advantageous system.

Deluge valve skid shall be connected to the firewater ring-main by two feeds separate isolatable sections so that if any one feed is not available due to damage or maintenance, the skid may continue to be supplied with water. Single deluge valve may be supplied by only one feed from the ring-main.

Facilities that allow the following shall be provided:

- Isolation of a deluge valve for maintenance while still permitting the deluge system to be supplied from the ring-main, if necessary via a bypass valve.
- Testing of a deluge valve, without necessitating initiation of F&G system or deluge release.
- Manual initiation of the deluge system at the deluge valve, local to the protected area.
- Signaling to the control room of the valve condition and the actuation and operation of the system

11.2.6 Deluge Control Panel

A central deluge control panel shall be provided on the platform.

The deluge control panel shall perform the following functions:

- Provide indications of fusible loop pressure, output pressure to the deluge control and supply pressures

- Provide manual pneumatic initiation of deluge

The deluge control panel shall be located in an area easily accessed in any emergency. All tubing shall be routed on protected routes and physically segregated per zone in a manner such that a major fire or explosion in one zone does not, as far as possible, result in deluge valves in other zones opening.

Deluge release shall automatically occur on loss of pressure in the fusible loop charged from the central deluge control panel.

Remote manual initiation of deluge in each area is available at the Fire and Gas Panel by energizing a solenoid.

Each fusible plug system which initiates deluge shall be fitted with pneumatic manual initiation stations at each exit from the fire zone which vent the fusible plug loop thus giving ESD, deluge release, etc.

Each deluge fusible plug system on triggering by a fire/manual initiates a low-pressure signal to the Fire and Gas Panel. This signal initiates alarm in the control room, fire and gas general alarm and appropriate ESD level.

11.2.7 Fixed Water cum Foam Monitors

4

Fixed Water cum Foam monitors with foam induction mechanism shall be provided to supplement fixed fire protection system.

The requirement for Fixed Water cum Foam monitors on the platform shall be established by the contractor based on the findings of the safety studies/ risk assessment, and in accordance with statutory requirements. This assessment shall include determining the requirements for fixed monitors to cover the boat landing. However it shall not be less than the requirement given elsewhere in the Bid. 4

The Fixed Water cum Foam Monitor shall be designed for mounting on stand posts or elevated platform at fixed locations and shall be designed for offshore use meeting the requirements of UL-162. The monitor shall be capable to give discharge in the form of hollow jet and spray arrangement. All the operation of the monitor viz. Horizontal movement, Vertical Movement, Jet/spray adjustment should be possible manually from Monitor (without use of power) 4

The discharge capacity of the Fixed Water cum Foam monitor shall be minimum 500 USGPM at 7.0 Kg/cm2 inlet pressure and shall be UL listed or FM approved non-aspirating type Water cum Foam monitor. The monitor shall be so designed as to resist the nozzle reaction forces during operation and shall be capable of being handled by one person.

APPROVAL 4

The Monitor, Foam Nozzle and Foam Induction devices shall be UL Listed or FM approved with following features:

Nozzle:	Non-aspirating type
Monitor flow:	minimum 500 USGPM
Operating pressure:	7.0 Kg/cm2 inlet pressure (100 PSI)

11.2.8 Foam Systems

The requirement for fixed foam spray systems shall be established by the Contractor based on the findings of the safety studies/risk assessment, and in accordance with statutory requirements.

Any fixed foam spray systems shall comply with the requirements of NFPA 16.

Manual foam firefighting shall be provided by portable monitors and hydrants/hoses

11.2.9 Hydrants

Hydrants station shall be strategically located on the platform to facilitate manual firefighting if required to supplement the fixed fire protection systems.

Pressure controlled hydrants shall be adjusted to provide 7 kg/cm2 at the inlet to the hydrant nozzle, when connected to a single length of hose.

Two lengths of flat hose per hydrant outlet and one spray jet nozzle for each pair of outlets shall be provided. Hoses for use with manual branch pipes up to 500ltr/min shall be 18 M long and 45 mm diameter. Hoses shall be stored in cabinets adjacent to each hydrant. Hose nozzle shall be constant flow rate type, and capable of both straight stream and fog type delivery. They shall be suitable for use with seawater.

Hydrant station shall be capable of either supplying firewater alone or firewater/ foam mixture utilizing foam concentrate inductors.

Hydrants, hoses, nozzles and associated equipment shall be suitable for use with firewater and firewater/ foam mixture.

Hydrant stations shall be located and specified such that all areas of the platform can be reached by at least two firewater/ foam hoses.
Hydrant, hoses, nozzles and associated equipment shall comply with NFPA 11, 11A and 14 and API 14G.

11.2.10 Firewater & Foam Hose Reels 4

Basic design shall provide distribution of firewater hose reels throughout the platform so that any area with fire risk can be reduced by water.
Hose reels are not required within utility/work rooms. This basis should be assessed with reference the findings of the safety studies/risk assessment conducted by the Contractor, and in accordance with statutory requirements. For further details refer FS 2004D.

11.2.11 Equipment Cabinets

All fire and safety equipment cabinets shall be provided with roller shutter or hinged doors designed to withstand extreme weather conditions.

11.3 Gaseous Fighting Systems

11.3.1 General

Retention times shall be sufficient to ensure extinguishments and cooling below re-ignition temperature or fuel dispersion. Ten (10) minutes shall be the default time for deep seated fires and five (5) minutes for others.

Storage bottles and associated valves shall be located outside the area being protected. Facilities shall be provided to protect the bottles from excessive temperatures due to exposure to sunlight.

A permanently piped 100% reserve supply of extinguishant shall be provided. The quantity of extinguishant required shall be based upon the ability to maintain an inert concentration for long enough to allow equipment to cool and so prevent re-ignition of fuel sources.

The systems shall be designed for automatic initiation on receipt of a confirmed fire input from the fire and gas logic. Manual initiation shall be provided from the control room or the skid or switches located at the entrances/exits to each protected space.

A 15 second pre-discharge alarm shall be provided within the protected space, together with means for isolating each system to prevent its accidental discharge when the protected space is manned.

A set of status indicators, together with alarm, shall be provided at the skid and the entrance/exit to each protected space showing whether the system is:

- Set for automatic discharge
- Set for manual discharge
- Discharged; or
- Inhibited

In addition the above signals shall be incorporated into the Fire and Gas system.

11.3.2 Carbon Dioxide Fire Fighting Systems

The following areas shall be provided with fixed carbon dioxide fire extinguishing.

- Gas Turbine Enclosure
- Diesel Engine Enclosures

The systems shall comply with the requirement of section11.3.1 and with NFPA 12, unless specifically noted otherwise**.**

11.3.3 Clean Agent Fire Fighting systems

The areas Specified in Annexure 1 of FS 5103 and else wherein the bid document shall be provided with fixed fire extinguishing systems utilizing an appropriate Clean Agent.

For further details refer FS 5103. (FS for clean agent system)

11.3.4 Portable and wheeled Trolley Mounted fire extinguisher 4

Portable and wheeled trolley mounted fire extinguisher shall be strategically located on the platform. These extinguishers shall comply with the requirement of NFPA 10 and API 14 G.

In addition, the provision of fire extinguishers shall comply with the following.

- The maximum travel distance from any point on the platform deck area having a potential for fire to an extinguisher should not exceed 50 ft. (15.2 m).
- A fire extinguisher (9.0 Kg dry chemical) with U.L. rating of 120: BC should be located within 10 ft (3.0 m) of each stairway on each deck level which has a potential for fire.
- Each galley should have installed extinguishers rated for Class A, B, and C fires.
- Portable Class K fire extinguishers shall be provided in kitchen areas where cooking oils and fats are used for response to small fires in the kitchen area without discharging the main system. Agents for kitchen shall be wet chemical suitable for K Class fires as per NFPA 10/NFPA 17A. Fire extinguishers of this type are available in hand portable models of 1.5 gal (6 L) and 2 1/2 gal (9.46 L). These fire extinguishers have ratings of 1-B:C and 2-A:1-B:C,
- A minimum of 10 nos of store pressure type DCP fire extinguisher of 9.0 Kg dry chemical fire extinguishers shall be provided in all areas containing hydrocarbons. Dry Chemical extinguishers with U.L. rating of 120: BC
- 9.0 Kg of dry chemical extinguishers shall be provided for all utility areas and electrical rooms. Dry Chemical extinguishers with U.L. rating of 120: BC.
- 9 liter AFFF extinguishers shall be provided in all areas containing hydrocarbon liquid hazard. These fire extinguishers have ratings of 3-A: 20-B.
- A minimum of 10 nos of 4.5 kg carbon dioxide extinguisher shall be provided in electrical rooms. CO2 extinguishers with U.L. rating of 10 : BC 4
- Alcohol resistant foam (AR AFFF) extinguishers shall be considered adjacent to the chemical injection storage area and injection skid.
- Water mist and CAF Fire Extinguisher Trolley Mounted (Design: High pressure) using AFFF compound with Fire Rating of 21A, 233B and Electrical fires upto 1000V at 1 meter shall be provided wherever water based fire suppression system /water injection facility is not available with minimum 01 no. at each deck . Trolley mounted extinguishers shall conform to BS EN 1866-1:2007 standards which include fire rating as per BS EN 3-7:2004+A1:2007 standards.

Portable Fire Extinguishers of Dry Chemical Type shall have the following features:

- Extinguisher shall be suitable for Class B & C fires as per IS: 2190/NFPA-10.
- Extinguisher shall be portable type with a carrying handle and a wall hook or bracket for mounting when not in use.
- Extinguisher shall be suitable for operation over a temperature range of 20°F to 140°F.

- Dry Chemical used in the extinguisher shall be potassium bicarbonate, suitable for use in fire fighting operations, based on properties confirming to NFPA-10. Dry chemical powder shall be UL listed. 4
- Gas pressure container (cartridge) shall conform to requirements given in IS: 4947/NFPA-10.
- Construction, Painting, Accessories, Performance Requirements, Testing, and Marking etc. shall be as per IS: 2171/NFPA-10.

Portable Fire Extinguishers of CO_2 Type shall conform to IS: 2878/NFPA-10, complete with weather-proof glass fronted box suitable for wall mounting.
Equipment shall be designed for an offshore location where the atmosphere is salt laden and corrosive.
Each Fire Extinguisher shall be installed on hanger or bracket in a weather-proof box to be supplied along with extinguisher by Vendor. This box shall be painted red, adequately labelled and have breakable glass front.

Extinguisher shall be placed in a manner such that the extinguisher operating instructions face forward, and each box shall be supplied with suitable mounting fixture. This box shall be painted red, adequately labelled and having breakable glass front. The top surface of a portable fire extinguisher, installed on hanger/bracket, shall not be more than 1.5 m above the floor level.

Trolley Mounted DCP units shall be as follow:

- Each trolley mounted DCP unit shall be 50Kg (minimum) capacity.
- Each DCP unit shall have a charge of dry chemical, nitrogen, actuators/lever, and close coupled hose reel assembly mounted on a trolley.
- The unit shall be completely assembled on trolley for easy movement and ready for operation.
- Each DCP unit shall have close coupled hose reel of sufficient length.
- Dry Chemical used in the extinguisher shall be potassium bicarbonate, suitable for use in fire fighting operations, based on properties confirming to IS: 4308/NFPA-10. Dry chemical powder shall be UL listed 4

The quantity and location of Trolley mounted DCP skid and Portable Dry Chemical Powder & CO_2 Portable extinguisher on the platform, together with requirement given elsewhere in Bid document for Trolley mounted DCP skid and Portable Dry Chemical Powder & CO_2 Portable extinguisher shall be established during Safety studies and detailed design phase by the contractor.

The dry chemical system requirement if not mentioned in scope of work, shall be reviewed by the contractor for the requirement. Any such dry chemical systems provided shall comply with NFPA 17 and FS: 5067F for Dry Chemical Skid with Hose Reels.

Trolley Mounted Water Mist firefighting units shall be as follows:

- The unit shall consist of a pressure vessel to hold the media with safety valve, a compressed Air cylinder provided with a reducer and high pressure hoses for discharge of water mist media and extinguishing gun. The system uses a mixture of water and AFFF as media. Compressed air is used as propellant for the media through nozzle where atomization takes place.
- The AFFF compound shall conform to UL-162.
- Air cylinder shall meet the expelling requirement of extinguishing media. The Air cylinder shall be approved by PESO (Petroleum and Explosives Safety Organisation-Govt of India).
- One spare compressed air cylinder compatible for use with unit.
- Discharge rate of gun shall meet the minimum fire performance rating of A- 21, B-233 as per EN-3.

APPROVALS 4

All portable fire extinguishers supplied shall be in accordance with the requirements of applicable NFPA. The extinguisher is to be designed and fabricated to an appropriate "marine" portable extinguisher standard which addresses the needs and concerns associated with the marine environment (i.e., corrosion, etc.). To verify compliance, the extinguisher should have documentation confirming its approval by an appropriate agency or statutory Authorities for "marine" service. This would be in addition to the size and classification ratings. The extinguishers shall be FM approved / UL listed/UL approved or its equivalent or shall have ISI certification markings on them. Necessary certificates/approvals shall be furnished in this respect

11.3.5 Kitchen hood fire suppression system: 4

Where kitchens are installed in conjunction with accommodation facilities to provide food services, the kitchens should be protected with appropriate fixed pipe protection of the cooking appliances and exhaust duct systems.
Agents for kitchen shall be wet chemical suitable for K Class fires as per NFPA 10.
System shall be self-actuated type with UL listed / UL approved/FM approved.

11.4 Fire rescue equipment

Fireman's equipment located in cabinets shall be located on the platform.

All fire and safety equipment cabinets shall be provided with roller shutter or hinged doors designed to withstand extreme weather conditions.

Adequate space shall be available in the vicinity of the fire and safety equipment cabinets to enable withdrawal and donning of the equipment by emergency personnel. These operations/ space requirements shall not impede escape routes.

11.5 Flame Retardant Furnishings

All furniture and furnishings shall be made from non-combustible or low flame spread materials.

11.6 Electric Power & Control Cables

Power and control cables associated with critical operating equipment, loss prevention or life support devices shall be fire resistant to IEC 60331. The equipment requiring such equipment shall be established during detailed design phase. All other cabling shall be covered in zero halogen sheathing that shall be non-combustible or low flame spread in accordance with IEC 60332-3 Category A.

Adequate isolation/segregation between cables shall be provided.

11.7 Pneumatic and Hydraulic Control Lines

Pneumatic and hydraulic control lines associated with double actuating, critical operating equipment or loss prevention devices, sited within an area where they may be exposed to flame may need to be protected eg. Pre-formed pipe insulation. Hydraulic systems using type 304, 316 and 321 stainless steel tubing may not require fire protection provided all parts of the system are provided with pressure relief.

11.8 Secondary Sources of Smoke

The design of fire divisions and coverings shall consider the potential for the release of smoke and toxic fumes when the material in question is subject to a temperature rise as a result of flame impingement. Materials used in such divisions and coverings shall be of a type capable of withstanding the temperature rises predicted for the credible fire loads expected.
Materials shall be suitable for the operating environment and the design life of platform, without necessitating repair or replacement.

12. EXPLOSION CONTROL AND MITIGATION

12.1 General

The over pressure and subsequent consequences of a hydrocarbon gas explosion shall be controlled by a combination of maximized natural ventilation, optimized module aspect ratio (length/height and width/height), minimized equipment congestion and optimized equipment layout.

The following design principles shall be followed:

- Equipment containing hydrocarbon gas or condensate shall, wherever possible, be located in naturally ventilated areas in order to aid dispersion of un-burnt gases. Equipment and pipe work located in confined or partially confined areas shall be minimized.

- Module aspect ratios for length/height and width/height shall be minimized. An aspect ratio of 3 is generally considered to be the upper limit for controlling gas explosion overpressures to within structural capabilities. The ideal aspect ratio is1, i.e. cubical module shape.

- Natural ventilation shall be maximized. This shall be achieved by the following :
    - Open sides wherever possible on the water injection module notwithstanding the need for blast protection.
    - Weather walls shall not be used.
    - Deck grating shall be used where practical except where bunding is required around vessels.
    - The platform orientation shall be aligned such that open paths through the decks align with the prevailing wind.

12.2 Explosion Overpressure Loads

Explosion over pressure loads shall be determined during detailed design phase by the Contractor. Where practical a frequency distribution of explosion overpressure loads shall be established. These shall be used to determine design explosion overpressure loads.

Based on these the following shall apply:

- Structural components including blast walls where provided shall be capable of withstanding these design loads. A minimum design blast pressure of 0.2 bars shall be used unless otherwise the blast study shows higher value of blast over pressure. The design of blast wall shall be using ultimate strength principles with a limiting lateral deflection of 100mm.
- The design of the blast walls shall be sufficient to withstand the explosion overpressure design loads for the area and shall be such that the walls may deform elasto-plastically but shall not be breached.

- Where blast walls are penetrated by electrical and piping transits, the penetrations shall be designed such that the blast protection offered by the blast wall is not reduced.

- Where fire and blast walls are likely to deflect and plastically deform in the event of gas explosion, safety critical equipment and facilities shall be located no closer than 2 meters behind the fire and blast wall. Safety critical pipe work e.g. fire water ring main, shall be

run not closer than one meter and be positioned at a height close to the anchor points of the wall where minimum deflection shall occur.

- Laydown areas located outside explosion vent areas shall be avoided since containers and other temporary equipment can block vent areas, impede the passage of any venting gases and increase the level of explosion overpressures.

- The longest side/dimensions of equipment shall be located parallel to the flow direction of the vent paths where possible i.e. pointing in the direction of the vent areas.

- Blockage of the vent areas provided by the open sides and deck grating shall be avoided by not placing items of equipment or structures in the vicinity of the vent areas. This is particularly applicable to small-bore pipework, site run instrument pipework, cable trays and ductwork.

- General module congestion with site run equipment including small bore piping, instrument tubing, cable trays and ductwork can have a significant effect on the magnitude of explosion overpressures. Detailed procedures for the control of site run equipment shall be developed and implemented.

12.3 Drag Loads

Significant drag loads can be generated as a result of a gas explosion. Critical equipment including hydrocarbon pipework, valves and vessels shall be designed to withstand explosion overpressure drag loads within a high drag zone located around the periphery of the process module. Critical equipment shall include the following:

- All hydrocarbon vessels and

- All hydrocarbon pipe work, blow down pipe work and firewater pipe work and above inclusive of valves

Design of the supports for the above items of equipment shall be appropriate for the duty.

13. PLATFORM ALARMS AND COMMUNICATION SYSTEMS

13.1 Overall Platform Alarm Philosophy

The Platform shall be provided with an alarm system so that personnel in any part of the platform are made aware of the existence of an emergency, and can be advised of its location and any special instructions for escape and mustering.
The system shall include audible alarms and verbal announcements via the Paging & Intercom (P & I) system. Areas subject to high noise levels shall be additionally equipped with flashing emergency alarm beacons.

The P & I system shall provide announcements and alarm annunciation throughout the Platform. It shall be designed such that all locations are covered by at least two loudspeakers powered from separate circuits. Power to the system shall be from a dedicated Uninterruptible power supply (UPS).

The alarm and P & I systems provided on the platform shall be compatible with those provided on other platforms within the process complex and shall not confuse personnel as to the nature/ location of the alarm and associated emergency.

The alarm system shall be in accordance with applicable sections of NFPA 72.

13.2 Alarm Types

The alarm types shall be similar to those on the existing complex. As a minimum the following shall apply:

13.2.1 General Platform Alarm

A General Platform Alarm (GPA) shall be provided throughout the Platform via the public Address system. It shall be initiated automatically or manually from the control room and shall have an intermittent tone of constant frequency. The alarm shall be the result of gas or confirmed fire detection in any area or manual intervention.

The GPA shall be confirmed as compatible with the alarms provided elsewhere on the complex.

13.2.2 Abandon Platform Alarm

An Abandon Platform Alarm (APA) shall be provided on the platform comprising a continuous audible tone via the public Address system. This shall be actuated by manual pushbutton only from the control room or locally at strategic locations on the Platform

The APA shall be confirmed as compatible with the alarms provided elsewhere on the complex.

13.2.3 Beacons

In areas of high background noise, greater than 85db (A), including areas where high noise levels are anticipated during emergencies, the GPA and APA shall be supplemented by yellow flashing beacons.

13.2.4 Alarm Loops

Beacons shall be installed on two loop system such that if one of the loops fail or is damaged, the beacons shall continue to function. Loops shall be installed so that their exposure to fire and blast damage is minimized**.**

14. ESCAPE AND EVACUATION

14.1 Escape and Evacuation Philosophy

The primary evacuation route from the platform shall be via bridge link. In event of personnel being unable to reach the bridge, a lifeboat and life raft shall be located on the platform as alternative means of evacuation.

14.2 Muster Areas

Space shall be provided for potential mustering of personnel in the areas adjacent to life rafts, life boat and conference room.

These muster areas shall be provided with the following:

- Adequate space for the maximum credible number of personnel mustering in the area shall be provided. As a minimum 0.5 m^2 of clear space per person shall be provided.
- Emergency (including battery backed) lighting and lighting levels shall be as per Section 10.4
- Communication system (e.g. telephone, P & I, etc)

Additional requirements (e.g. radiation shielding, deluge protection, etc) shall be determined based on the safety studies/risk assessments conducted by the Contractor.

14.3 Escape Routes

14.3.1 General

Escape and egress routes shall be provided to ensure the safe evacuation of personnel from any region of Well platform.

Escape routes shall comply with the requirements of NFPA 1, NFPA 101 and the following:

- There shall be at least two separate egress routes from each area.
- Primary escape routes shall be located around the perimeter of each working area. They shall be as direct as possible with the minimum

number of changes in direction. Escape routes shall normally be routes used as main access routes and maintenance access.

- For process platform, primary escape routes shall be 1200mm minimum in width and Secondary routes shall be 1000mm minimum in width. For Well Head Platforms both primary & secondary escape routes shall be 710mm minimum in width. All escape routes shall have clear height up to 2.2m minimum. These clearances are required to allow personnel to move quickly and safely around the Well platform in an emergency, to provide adequate access for emergency response teams wearing fire-suits, breathing apparatus etc. and to allow easy transit of stretcher teams. 4

- Stairways with a change in direction of 180 degrees shall be provided with a minimum clear landing width of 1.2metres to allow for safe maneuvering of stretchers.

- No equipment or structures shall obstruct the minimum width and height of the escape routes. No hatches shall be located on primary or secondary escape routes. Laydown areas and equipment storage areas shall not form part of primary and secondary escape routes.

- Doors from areas and rooms shall be self-closing and constructed such that they may be opened from either side. All hinged doors shall open outwards in the normal direction of escape to the bridge link. Open doors shall not obstruct escape routes. Doors shall be a minimum of 750 mm wide and should be increased where large numbers of people may congregate during an emergency. All escape doors shall be provided with a panic bar.

- All areas shall be provided with sufficient escape routes.

- The boat landing shall be accessible via escape routes from two sides.

14.3.2 Escape Ladders & Scramble Nets

Fixed ladders shall only be provided as a means of providing direct escape to sea level, as a secondary means of escape from an area already served by a stairway and from small access areas or areas not normally manned.

Access to sea shall be provided by escape ladders fitted to the platform leg and shall be accessible to fast rescue craft. The ladders shall provide the opportunity for a man overboard to self-rescue.

Scramble nets shall be provided to supplement the fixed ladders to sea level where required by applicable codes. The scramble nets shall be made to SOLAS standard. 4

Scramble nets shall be fitted on the edge of the deck adjacent to the stowage positions of each inflatable life-raft. The overall length of the scramble nets shall be minimum 1.5-2.0 meters more than the distance between the highest stowage position and the lowest level of astronomical tide. 4

The crane cab shall be provided with two routes of escape via two permanently installed vertical ladders on either side of the crane pedestal. At least one escape route shall be available irrespective of the crane slew positions.

14.3.3 Escape Route Marking and Lighting

All escape routes shall be clearly marked so that they can be readily followed by personnel in an emergency. In order to ensure that this is achieved, the following identification of these routes shall be made:

- Escape routes shall be clearly marked with colored non-slip paint covering the whole route in plated deck areas and in solid stripes on either side of the route for grated deck areas. The edges of escape routes shall be marked with photo luminescent lines for their full length.

- The routes shall be clearly marked with visible safety signs

- Escape routes shall be clearly illuminated at all times. In the event of power loss, emergency power supplies shall be provided to the lighting systems to ensure the continued illumination of the routes.

- A proportion of all lights illuminating escape routes shall be battery backed, duration of battery 90 minutes minimum. The lighting levels due to battery-backed lights shall comply with the requirements given below.

- Escape route lighting levels shall comply with the requirements of API 14F, i.e.:

- A lighting level of 20 lux (minimum) shall be provided when main or emergency generator power is available; and

- A lighting level of 1 lux (minimum) shall be provided when only battery power is available.

14.4 Life boat

Life boats should be totally enclosed, self-propelled, fire protected with self-contained air support system & water spray system and release mechanism. 4
The engine shall be provided with a Manual & Hydraulic/Electric starting system. Any necessary starting aids shall also be provided.

The following General Specifications are applicable to all personal life-saving items (i.e. Drinking Water for Life Boat, Ration for Life Boat, First-Aid Box, and Rechargeable Search Light & Water proof Torch):
All items are for use in "**Totally-enclosed Fire Protected self-propelled Life Boats with Self-contained Air Support System**" and the items offered shall be manufactured according to Chapter IV of the International Life-Saving Appliances Code (LSA Code) adopted by the Maritime safety Committee (MSC) at its 66th Session (June 1996), by resolution MSC. 48(66), under SOLAS Convention (Chapter III of 1974 SOLAS Convention). (For details Clauses 4.4.8.1 to 4.4.8.32 of Chapter IV of the LSA Code may be referred for all items of lifeboat equipment). 4
Technical Leaflets / Brochures of offered products to be provided along with Bid.

Packing: All items shall be packed and supplied in water-proof packing suitable for transport by sea.

The items shall be not be older than 3 months from the date of manufacture at the time of inspection.

ITEMWISE ADDITIONAL SPECIFICATIONS:

DRINKING WATER FOR LIFE BOAT:

- Shelf-life: Minimum 3 years 4
- Date of Manufacturing & Expiry to be clearly marked on each packet.
- Container / Packing: It shall be packed in 500 ml HDPE bottle.

RATION FOR LIFE BOAT:

- Shelf-life: Minimum 3 years 4
- A food ration totaling not less than 10,000 kJ for each person the lifeboat is permitted to accommodate.
- Date of Manufacturing & Expiry to be clearly marked on each packet.
- **Container / Packing:** It shall be packed in tamper-free packets

FIRST-AID BOX FOR LIFE BOAT:

- **Shelf-life:** Minimum 2 years

- All essential items (same items as those used in Life-rafts) shall be enclosed, including an instruction leaflet in the box.

- Date of Manufacturing & Expiry to be clearly marked on each packet

RECHARGEABLE SEARCH LIGHT:

These are for use in Lifeboats and Rescue Boats specifications as per LSA Code Chapter IV survival crafts Para 4.4.8.29.

- The Light unit shall be water-proof.

- One spare bulb to be provided with each unit

- **Light Intensity:** Minimum 2500 candela

- Search light shall have a horizontal and vertical sector of at least 6 degrees and a measured luminous intensity of 2500 candela which can work continuously for not less than 3 hours

- **Battery:** Re-chargeable Li-Ion or Ni Cd (i.e. dry type) battery integrated into the Search light body.

- **Weight:** Weight of the unit (with battery): Maximum 4 kg.

- **Charging / discharging Cycle:** Approx. 5000 cycles.

- **Charger:** Separate Charger, 110 ~ 220 V AC, 50~60 Hz.

- **Charging time:** Approx. 6 hours

- **Use / Discharge time:** Approx. 3 hours

WATERPROOF TORCH:

These are for use in Lifeboats and Rescue Boats specifications as per LSA Code Chapter IV survival crafts Para.4.4.8.16

4

- The torch shall be water-proof.

- One spare bulb and four cells (batteries) to be provided with each torch.

- **Shelf-life:** Minimum 1 year

- **Cell / Battery:** Ordinary dry-cell (1.5 V x 2 cells)-

- **Weight:** Weight of the unit (with battery): Maximum ½ kg.
- Suitable for Morse Signaling.

The lifeboat shall be fire resistant and provided with a self-contained water spray system.

The lifeboat shall be davit launched and provided with dedicated davits. The davits and lifeboat shall be arranged so that the lifeboat is orientated away from the platform.

Mustering area located adjacent to the lifeboat shall be provided. The minimum clear space to be provided for mustering at each station shall be personnel carrying capacity of lifeboat multiplied by $0.5M^{2.}$ (e.g. for 50 persons life boat 25 M^2 of clear mustering area to be provided.)
Lifeboat embarkation/mustering areas may require shielding for the protection of the lifeboat and personnel mustering in these areas (see Section 14.2). This requirement shall be established during the detailed design phase by the Contractor based on Safety Studies report. 4

Lifeboat embarkation/mustering areas shall be provided with emergency lighting as indicated in Section 10.4

CERTIFICATES/APPROVALS 4

Where the Life Boat & its Equipment is manufactured outside India, it should carry the Type Approval/Individual Product Approval Certificate of the Maritime Administration of the country of manufacture (or the EC Type Approval if pertinent), or the Certificate of any of the following Classification Societies recognized by the Government of India on behalf of that Maritime Administration. It should also carry test reports, certifying testing according to the latest relevant IMO Code.

1) Lloyds Register
2) Bureau Veritas
3) Det Norske Veritas AS
4) American Bureau of Shipping
5) Germanischer Lloyds
6) Nippon Kaiji Kyoki
7) Indian Register of shipping

Where the Life Boat & its Equipment are manufactured within India, it should have with it the Type approval/Individual product approval of the Directorate General of shipping (DGS). Copy of Approval Certificate is to be provided.

14.5 Life rafts

Description - Manual Launching type Inflatable Life rafts complying with latest SOLAS Regulations / LSA Code.
Capacity – As per scope of work.

i) Specifications

- The offered "Life raft" shall comply with the Detailed Specifications of the Latest LSA Code (Chapter IV, section 4.1 and 4.2) for Manual Launching type Inflatable Life Rafts.
- The "Life raft" shall be equipped with the items as detailed in the Latest LSA Code.
- The make & model of the offered life raft shall be clearly mentioned.
- The Date of Manufacture of the "Life raft" shall not be more than 3 months old at the time of Inspection.
- Life raft complements i.e. ration, drinking water can, pyrotechnics etc. (hand flares, rockets, smoke floats etc.) should not be older than 3 months at the time of supply of Life rafts. Each pyrotechnics shall have shelf life of at least 3 years while the ration and drinking water cans shall be of minimum 3 years shelf life. 4

ii) Approval 4

Where the Life Raft used is manufactured outside India, it should carry the Type Approval/Individual Product Approval Certificate of the Maritime Administration of the country of manufacture (or the EC Type Approval if pertinent), or the Certificate of any of the following Classification Societies recognized by the Government of India on behalf of that Maritime Administration. It should also carry test reports, certifying testing according to the latest relevant IMO Code.

1.) Lloyds Register
2.) Bureau Veritas
3.) Det Norske Veritas AS
4.) American Bureau of Shipping
5.) Germanischer Lloyds
6.) Nippon Kaiji Kyoki
7.) Indian Register of shipping

Where the Life Raft used are manufactured within India, it should have with it the Type approval/Individual product approval of the Directorate General of shipping (DGS). Copy of Approval Certificate is to be provided.

iii) Certificates: 4

The offered make/model of life rafts shall be satisfactorily drop tested with stowage height of minimum 30 mtrs. The drop test certificates along with the approval certificate for each life raft mentioning its serial no etc should be made available by the firm at the time of inspection

iv) Marking

The life raft container shall be marked as per the LSA Code requirement, including the following:

- Makers name or trade mark,
- Serial no. of life raft,
- Date of manufacture (month & year),
- Name of approving authority,
- No. of persons it is permitted to carry,
- Length of painter line (min 45 m),
- Maximum permitted height of stowage above waterline

v) Technical Literature

Detailed Technical Literature of the offered make / model of the Life raft should be provided along with the bid document and also along with each life raft supplied.

The life raft shall be of a highly visible colour. Each life raft shall be marked in block letters (in highly visible colour) with respective platform name and legends, e.g "LIFT RAFT, ONGC PLATFORM - ----------"

The life rafts shall be provided complete with UV protected fiberglass packing capsule, storage cradle and tilt table and painter line for inflating.

"Length of the painter rope shall be adjusted according to the location of the life raft above sea surface so as to ensure that the life raft is properly inflated once launched. The length of the painter rope stowed inside the life raft shall be indicated on the container".

Life Rafts shall be installed in the self-launching mode.

The safety of the personnel in the raft is of paramount importance and the vendor is expected to offer a fully safe and operable system incorporating any additional safety features considered necessary.

4 The canopy shall be international Orange in colour and shall comply with the requirements of para 4.1.1.5 of section 4.1, Chapter-IV of LSA code. In addition a large **(X)** to be marked on the canopy with retro-reflective tapes.

Embarkation/mustering areas located adjacent to each life raft station shall be provided. The minimum clear space to be provided for mustering at each station is personnel carrying capacity of life raft multiplied by $0.5M^2$ (e.g. for 10 persons life boat 5 M^2 of clear mustering area to be provided).

Life raft embarkation/mustering areas may require shielding for the protection of the life raft and personnel mustering in these areas (see Section 14.2). This requirement shall be established during the detailed design phase by the Contractor.

4 Life raft embarkation/mustering areas shall be provided with emergency lighting as indicated in Section 10. 4

The quantity and location of life rafts on the platform, together with requirement given elsewhere in Bid document for Life rafts, shall be established during Safety studies and detailed design phase by the contractor.

14.6 Life Preservers (Life Jacket) and Marine Work Vest

Life Preservers (Life Jacket)

The adult inherently buoyant life jacket along with life jacket light shall be so constructed as to meet the requirement of Chapter III regulations 22 of SOLAS LSA code 96 with latest amendments if any.

Life jacket and life jacket light should have “Wheel Mark” certification symbolizing conformity in accordance with the technical requirements of the MED as per the EC directive 96/98/EC on marine equipment (MED).

The model no., certification details, manufacturing month & year, Buoyancy, wheel mark should be mentioned on each life jacket.

The following shall also be complied:

MATERIAL

- The materials used in the construction shall not be adversely affected by exposure to sea-water, oil, oil products and sunlight. It should be made of materials of low flammability and be rot- proof and corrosion resistant. Buoyancy material shall be of good quality synthetic material packed in good quality synthetic fabric of orange color.

FEATURES

- It should provide a minimum of 16 kgs (35 pounds) buoyancy in fresh water for 24 hours. The buoyancy of the life jacket shall not be reduced by more than 5% after 24 hours of sub-mergence in fresh water.
- It shall be so constructed as to eliminate as far as possible all risk of its being put on incorrectly but it shall be capable of being worn inside out.
- It shall be capable of lifting the face of an exhausted or unconscious person out of water within 5 seconds of entering still water and holding it above the water with the body inclined backwards from its vertical position.

- It shall not sustain burning or continue melting after being totally enveloped in fire for a period of 2 seconds.
- It shall be capable of turning the body in the water from any position to a safe floating position with the body inclined backwards from the vertical floating position.
- Each life jacket shall be fitted with an approved whistle firmly secured by a chord.
- Each lift jacket shall be fitted with light.
- Each life jacket shall be fitted with a strong ring or loop to facilitate rescue. This ring or loop shall be so located such that it cannot be used for fastening the jacket.
- Each life jacket shall be suitable for use by a fully grown male adult.
- Six reflector tape 3M or equivalent should be provided as per latest SOLAS regulations.
- Fastening tapes shall have a breaking strength of not less than 1.4 KN
- The manufacturing date of life jacket shall not be more than six months old at the time of inspection.

TESTING & CERTIFICATION

- Testing & evaluation of life jacket shall be as per Part 1: proto type tests for life saving appliance 2003 edition, resolution MSC.81 (70) or any revision thereafter.
- The life jacket with accessories should carry the Type Approval / individual product approval certificate of the Maritime Administration of the country of manufacture (or the EC type approval if pertinent), or the certificate on behalf of that Maritime Administration of any of the classification societies i.e. Lloyds Register / Bureau Veritas / Det Norske Veritas AS / American Bureau of shipping / Germanischer Lloyd / Nippon Kaiji Kyokai / Indian Register of Shipping. It should also carry test reports, certifying testing according to the latest relevant IMO code.

Life jacket light shall confirm to the following specifications in addition to SOLAS requirement:

- Life jacket light should be fixed in one side.
- The life jacket light shall be provided with a luminous cell having a shelf life of at least five years. The manufacturing date of the light shall not be more than six months old at the time of inspection.
- Each light unit should have an automatic electronic water activation system and should be capable to work between -1^0C to 30^0C
- The expiry date of the battery must be clearly mentioned on each light unit.
- Warranty certificate of the shelf life of the battery and the complete unit shall be submitted at the time of inspection.

PACKING

- Each Life jacket shall be packed in polythene bag.
- Each Life Jacket shall be marked in block letters (in highly visible colour) with respective platform name and legends, e.g ONGC PLATFORM - ---"
- 10 to 24 nos of life jackets with accessories shall be packed in each box suitable & capable of sending to offshore platform by sea.

Adequate space shall be available in the vicinity of the lifejackets cabinets to enable withdrawal and donning of the equipment by personnel. These operations/space requirements shall not impede escape routes.

The quantity and location of Life jacket on the platform, together with requirement given elsewhere in Bid document for Life jacket, shall be established during Safety studies and detailed design phase by the contractor

Marine Work Vest

The work vest shall be so constructed as to have sufficient buoyancy and stability in calm fresh water to lift the mouth of an exhausted or unconscious person not less than 120 mm clear of water with the body inclined backwards at an angle of not less than 20º and not more than 50º from vertical position.

The work vest shall be so constructed as to have sufficient buoyancy and stability in calm water to turn the body of an unconscious person in the water from any position to one where the mouth is clear of the water, in not more than five seconds.

The work-vest shall retain its buoyancy even if it is punctured.

It shall be so constructed as to allow the wearer to swim short distance and to board a survival craft.

The work vest shall be coated with vinyl or other equivalent material which is tough fire resistant, self-extinguishing and highly abrasion resistant. The coating material shall not be adversely affected by moisture, oil, grease, gasoline, paint etc.

The straps / buckles shall be adjustable so that it can fit persons of different built.

The floatation material shall be such that a wearer shall be picked-up using the straps without dislocating or damaging the vest nor injuring the wearer.

Certificates / Approvals: The offered materials shall have USCG Type III/V approval. Copy of Approval Certificate to be provided. OR the items shall have "Wheel Mark" certification symbolizing conformity to the Technical Requirements of the MED as per EC Directive 96/98/EC The Model No., Certification Details, Month & Year of Manufacturing (and shelf-life wherever applicable) and Wheel Mark shall be mentioned on each product.

All the materials offered shall meet the latest specification and requirements of relevant provisions of SOLAS and MMD / DGS.

The product shall carry the Type Approval / Individual Product Approval Certificate (as applicable) of the Maritime Administration of the Country of Manufacture (or EC Type Approval, if pertinent), or the Certificate on behalf of that Maritime Administration of any of the Classification Societies (like Lloyds Register / Bureau Veritas / Det Norske Veritas AS /
American Bureau of Shipping / Germanischer Lloyd / Nippon Kaiji Kyokai / Indian Register of Shipping).Testing & evaluation of Marine work vest shall be as per Part 1: proto type tests for life saving appliance 2003 edition, resolution MSC.81 (70) or any revision thereafter.

Detailed instructions of use (of the product) shall be provided with each item so that the user will be able to operate / use the item correctly.

Shelf-life: Minimum shelf-life of the item shall be 3 years.

Date of Manufacturing shall be written on each item.

Technical Brochure of offered item to be submitted.

The item shall be not be older than 3 months from the date of manufacture at the time of Inspection.

Packing: Items shall be packed and supplied in water-proof packing suitable for transport by sea.

All flotation material should be coated with chemical, which is tough, fire resistant, self-extinguishing and highly abrasion resistant. The material is unaffected by oil gas live or basic chemicals. Colour shall be international **Orange**.

Each Marine work vest shall be marked in block letters (in highly visible colour) with respective platform name and legends, e.g. ONGC PLATFORM - ----------. “

Marine work vest (max. 10 nos.) shall be kept in a container. The containers shall be free-standing enclosures, accessible by full-length and hinged door. The containers shall be constructed of heavy-duty fiberglass and GELCO finish. All enclosure hardware such as hinges, latches, handles and bolting shall be of SS 316. Adequate bottom and back frame shall be provided to permit deck or bulkhead mounting. Each container shall be labeled “MARINE WORK VEST”. The letter size shall be 80 mm and in Black colour, container colour shall be international **Orange**.

The quantity and location of Marine Work Vest on the platform, together with requirement given elsewhere in Bid document for Marine Work Vest, shall be established during Safety studies and detailed design phase by the contractor

14.7 Life Ring Buoy and Life Line

Lifebuoys with buoyant line and strobe light shall be strategically located all-round the faces on the platform

- The life buoy shall be made of solid cork or equivalent material or plastic or other synthetic compounds, and shall be capable of retaining its buoyancy and durability in sea water or oil products under variations of temperature or climatic changes prevailing in open sea.

- It should be constructed to withstanding a drop test into water from a height at which it is stowed above the waterline in the lightest seagoing condition or at least 38 meters, whichever is higher, without impairing either its operating capability or that of its attached components.

- It should be fitted with a grab line not less than 9.5 mm in diameter and not less than 4 times the outside diameter of the body of the buoy in length. The grab line shall be secured at four equidistant points around the circumference of the buoy to form four equal loops.

- Every life buoy shall be stowed so that it can be readily cast loose. Suitable brackets for securing the buoy to the platform hand railing shall be supplied.

- The life buoy shall be capable of floating in fresh water at-least for 24 hours, with a weight of 15 kg of iron suspended from it.

- The buoyancy shall not depend upon air compartments which require to be inflated.

- Each life ring buoy shall be supplied minimum with

a. An efficient self-igniting light secured to the buoy with a lanyard 1-1.5 meters in length. The lanyard should be attached to the light at the level of the centre of floatation where possible to prevent inclination of the signal in a seaway. The light should be capable of withstanding an immersion test 0 to 0.5 meters (1.5 ft.) without adversely affecting the operation of the light. The self-igniting light shall be such that it cannot be extinguished by sea water and shall be capable of burning for not less than 45 minutes with a luminous intensity of not less than 2 candle power in all directions of upper hemisphere. The water light shall be mounted in a bracket near the life ring buoy so that when the buoy is cast loose, the water light will put free from bracket.
b. Buoyant lifeline length shall not be less than twice the height at which it is stowed above the water line or shall be at least 55 meters long. Buoyant lifeline shall be of diameter not less than 8 mm with a breaking strength not less than 5 KN.

c. Suitable brackets for securing the buoy to the platform hand railing. They shall be such that the buoy can be easily removed for use.

- Life Ring Buoys shall meet the requirement of SOLAS regulation 30 & 31 of SOLAS Chapter III including 1983 amendments and SOLAS/46CFR160.050
- The life-buoy shall be of a highly visible colour.
- Life buoy shall have an outer diameter of not more than 800 mm and an inner diameter of not less than 400 mm.

All the materials offered shall meet the latest specification and requirements of relevant provisions of SOLAS and MMD / DGS.

The product shall carry the Type Approval / Individual Product Approval Certificate (as applicable) of the Maritime Administration of the Country of Manufacture (or EC Type Approval, if pertinent), or the Certificate on behalf of that Maritime Administration of any of the Classification Societies (like Lloyds Register / Bureau Veritas / Det Norske Veritas AS /
American Bureau of Shipping / Germanischer Lloyd / Nippon Kaiji Kyokai / Indian Register of Shipping).

The items shall have "Wheel Mark" certification symbolizing conformity to the Technical Requirements of the MED as per EC Directive 96/98/EC.

The Model No., Certification Details, Month & Year of Manufacturing (and shelf-life wherever applicable) and Wheel Mark shall be mentioned on each product.
Detailed instructions of use (of the product) shall be provided with each item so that the user will be able to operate / use the item correctly.

Shelf-life: Minimum shelf-life of the item shall be 3 years.

Date of Manufacturing shall be written on each item.

Technical Brochure of offered item to be submitted.

The item shall be not be older than 3 months from the date of manufacture at the time of Inspection.

Packing: Items shall be packed and supplied in water-proof packing suitable for transport by sea.

i) LIFE RING BUOY

The life buoy shall be of ring-type, for Adult use.

It shall conform to Part 2.1 of Chapter I General Requirements for Life-Saving Appliances and Chapter II Para 2.1.1 of Life Saving Appliances Code, Resolution MSC.48 (66) and Rule 5 (2) of the Merchant Shipping (Live Saving Appliances) Rules, 1991 (as per the latest amendment)

Certificates / Approvals: Each item shall be as approved by Mercantile Marine Department of Govt. of India or equivalent statutory authority like IMO, USCG, and SOLAS etc. Adequate Certificates shall be furnished in this respect. The offered materials shall have Approval Certificate as per MS Notice No.5 of 2007 (No. ENG/FFA/1237 dated 22-06-07) issued by DG Shipping. Copy of Approval Certificate to be provided.

Weight: Minimum 2.5 kg.
Each life-buoy shall be provided with Life-line.

ii) LIFE-LINE FOR BUOY (BUOYANT LINE):

It shall conform to Part 2.1.4, Chapter II (Personal Life-Saving Appliances) of International Life-Saving Appliances Code, Resolution MSC.48 (66) and Second Schedule, part-I of The Merchant Shipping (Live Saving Appliances) Rules, 1991.

The length of the life-line shall be at least 50 m.

Life Ring Buoy shall be coloured international Orange and be suitably marked in block letters on both the side (in highly visible colour) with respective platform name and legend, e.g ONGC PLATFORM - ----------."

The quantity and location of Lifebuoys on the platform, together with requirement given elsewhere in Bid document for Lifebuoys shall be established during Safety studies and detailed design phase by the contractor

14.8 Personal Survival Equipment

Sufficient personal survival equipment for the maximum number of personnel on board each platform shall be provided on that platform. The equipment shall include, in addition to those given in Design Criteria-Mechanical and Safety & Life Saving Equipment, but may not be limited to:

- Smoke hoods complete with spare filters, suitable for 20 minute duration;
- Pairs of fireproof gloves; and
- Flashlights complete with spare batteries (intrinsically safe devices)

The above items of equipment shall be stored within "Grab Bags".

14.9 Safety Signs & Safety Plans

Safety signs shall be provided on the platform. Safety plans consists of a simplified plan view of the applicable platform deck, clearly identifying major items of equipment, rooms/walls, points of access and escape routes, walkways, fire and safety equipment and major structural members shall be strategically located throughout the platform. Safety plans shall comply with SOLAS/Life Saving Appliances Code.

14.10 Platform Identification Signs

Platform Identification signs shall be provided on the platform in accordance with Statutory Requirements. In addition, as a minimum these shall display the name of the platform and the Company's logo.

These shall be illuminated for night visibility. The lighting shall be provided with emergency power supplies of maintaining illumination for a period of 96 hours following loss of main power.

14.11 Dropped Object and Swinging Load Protection

Equipment layout shall minimize the potential for dropped objects and swinging loads to impact equipment leading to losses of containment or to impact safety critical equipment leading to impairment of the equipment.

Where risks of dropped object or swinging load impact exist, impact protection shall be provided.

The location and strength of such protection shall be established by the Contractor.

14.12 Personnel Basket and Scramble Net

Personnel Baskets: 4

There shall be provision for minimum two nos. of personnel basket at two source location opposite to direction of wind.

- Each personnel basket shall be suitable for a minimum of six (6) men.
- The personnel Transfer Basket shall be rigid type during transfer operations but shall be collapsible for storage. 4
- The personnel basket shall have overhead protection from falling objects and side impact protection with quick release safety lanyards.
- Should have shock absorbing bottom.
- Baskets shall be complete with lifting ring, safety load line and elastic stabilizer and netting with top and bottom ring.

- Stabilizer shall have a canvas shroud or other covering to protect it from sun and weather.
- Each personnel basket shall be fitted with lifeline of sufficient length.
- Each personnel basket shall be marked in block letters (in highly visible colour) with respective platform name and legend, e.g ONGC PLATFORM - ----------. "
- The personnel baskets shall have type approval certificates from ABS/DNV etc.
- Instructions for periodic inspections & refurbishments, as applicable shall be indicated on the Personnel Baskets itself. 4

4 **Scramble Net**

Scramble nets supplied shall be complete with required mounting hardware. Nets shall support a minimum of twenty four (24) men simultaneously. The scramble nets shall be made to SOLAS/LSA standard.

The quantity, capacity and location of Personnel Basket and Scramble Net on the platform, shall be established during Safety studies and detailed design phase by the contractor but shall not be less than the requirement given elsewhere in the bid document

APPROVALS

Each Scramble net shall have the Type approval certificate/Product certification of any of the following Classification Societies 4

1) Lloyds Register
2) Bureau Veritas
3) Det Norske Veritas
4) American Bureau of Shipping
5) Germanischer Lloyds
6) Nippon Kaiji Kyoki
7) Indian Register of shipping

Necessary Certificates towards the same shall be furnished.

14.13 Turbine Exhaust Stack

The location of the platform shall take account of the potential effects of turbine exhaust stacks of platform on the Helideck located on the nearby platform of the complex. In addition, the exhaust stacks shall be located and their height selected so that helicopter activities are not affected by temperature gradients caused by the hot exhaust gases.
Exhaust stake shall be so located that it do not impair functioning of equipment installed on the deck. Due care shall be taken of the location of the exhaust stacks in relation to the crane cab and other elevated work areas when determining their position.

15. OCCUPATIONAL SAFETY REQUIREMENTS

15.1 Fire Fighting and Rescue Equipment

The requirements for firefighting and rescue equipment are defined in various sections of this specification.

15.2 Breathing Apparatus (BA) sets, Fire Blanket and Fire Man Outfit

Breathing Apparatus 4

Self- contained breathing apparatus with oxygen cylinder(s), face mask; eyeglass etc. complete shall be supplied. Self- contained breathing apparatus shall provide minimum 30 minutes protection. The design of the apparatus shall enable the wearer to breathe air on demand from a high pressure air cylinder via a demand valve connected to the face mask. The exhaled air shall pass from the face-mask through a non-return valve to the atmosphere. The apparatus shall be designed and constructed to prevent ingress of the external atmosphere. The total mass of the apparatus should not exceed 16 kg.

Each Breathing Apparatus shall be marked in block letters (in highly visible colour) with respective platform name and legend, e.g. ONGC PLATFORM - ----------Q. “

Breathing apparatus shall meet the technical requirement of SOLAS, Chapter II-2, Part-A and Regulation 14 or BS EN 137:2006, NIOSH. 4

Where the offered Breathing Apparatus is manufactured outside India, it should carry the Type Approval/Individual Product Approval Certificate of the Maritime Administration of the country of manufacture (or the EC Type Approval if pertinent), or the Certificate of any of the following Classification Societies recognized by the Government of India on behalf of that Maritime Administration. It should also carry test reports, certifying testing according to the latest relevant IMO Code.

1) Lloyds Register
2) Bureau VeritasΔ 4
3) Det Norske Veritas AS
4) American Bureau of Shipping
5) Germanischer Lloyds
6) Nippon Kaiji Kyoki
7) Indian Register of shipping

Where the offered Breathing Apparatus are manufactured within India, it should have with it the Type approval/Individual product approval of the Directorate General of shipping (DGS).

Copy of Approval Certificate is to be provided.

The quantity and location of Breathing Apparatus on the platform, together with requirement given elsewhere in Bid document for Breathing Apparatus shall be established during Safety studies and detailed design phase by the contractor.

In addition to the required quantity for the breathing apparatus, additional quantity of breathing apparatus (with each Fireman's outfit) shall be kept together with Fireman's out fits container

Fire Blanket 4

Easy to use fire blanket confirming to BSEN 1869, latest revision shall be furnished as per following sizes:
Size: 1.8m x 1.8m
Material: Blanket made from woven glass fiber fabric
Colour : Dark (Easily visible colour)
Casing : These blankets shall be suitable for mounting in vertical quick-release container so that they can be easily pulled out and wrapped round a person whose clothes are on fire. No snaps and zippers permitted

Each Fire blanket shall be marked in block letters (in highly visible colour) with respective platform name and legend, e.g ONGC PLATFORM - ----------.

The quantity and location of Fire Blanket on the platform, together with requirement given elsewhere in Bid document for Fire Blanket shall be established during Safety studies and detailed design phase by the contractor.

4 Each Fire Blanket shall be Type approved/ Product Certification to specified standard BS EN 1869, latest edition by any of the following Classification Societies

1) Lloyds Register
2) Bureau Veritas
3) Det Norske Veritas AS
4) American Bureau of Shipping
5) Germanischer Lloyds
6) Nippon Kaiji Kyoki
7) Indian Register of shipping

Necessary Certificates shall be furnished in this respect.

Fire Man's Outfit

Complete set of fireman's outfit including the following shall be furnished.

4 (a)**Personal equipment comprising**:

i. Protective clothing (one piece or two piece suit) of fire resistant material to provide protection against radiated heat & flame lick from the fire & burns and scalding by steam. The outer surface shall be water-resistant.
ii. Fire fighter's gloves of fire resistant and electrically non-conducting material with a minimum overall length of 30 cm from fingertip to cuff.
iii. Fire fighter's boots to protect against various hazards which may be encountered during fire fighting operations. The design shall include a steel toe cap, steel plated inner sole & a nonconductive sole with adequate tread to give good grip.
iv. A rigid helmet providing effective protection against impact.
v. An electrical safety lamp of an approved type with minimum burning period of 3 hrs
vi. An axe to the satisfaction of the Administration.

(b) **A breathing apparatus of approved type comprising of**: 4

i. A Self- contained breathing apparatus shall be provided in addition to the above which shall be capable of functioning for a minimum of 30 minutes protection. For each breathing apparatus a fireproof lifeline of sufficient length and strength shall be provided

Fireman's outfit shall be in accordance with SOLAS Regulations, chapter II -2, Part A & Regulation 14.

The Fireman's outfit shall be kept in a SS316 container with the same quantity of self-contained breathing apparatus. 4

Each Fireman's Outfit shall be marked in block letters (in highly visible colour) with respective platform name and legend, e.g ONGC PLATFORM - ----------. "

The quantity and location of Fireman's outfit on the platform, together with requirement given elsewhere in Bid document for Fireman's outfit shall be established during Safety studies and detailed design phase by the contractor.

Each Fire Man's Outfit shall have the Type approval/Product certification of any of the following Classification Societies 4

1) Lloyds Register
2) Bureau Veritas
3) Det Norske Veritas
4) American Bureau of Shipping
5) Germanischer Lloyds
6) Nippon Kaiji Kyoki
7) Indian Register of shipping

Necessary Certificates towards the same shall be furnished.

15.3 Stretchers

The number and location of stretchers on the platform shall be established during detailed design phase by the contractor. The stretcher shall meet the following requirement as minimum:

a. The stretcher shall be rigid stokes litter type in which an injured person can be securely and comfortably strapped and hoisted. It shall be bright Orange color so as to be highly visible.
b. The stretcher shall be easy to assemble and load.
c. The stretcher shall be sturdy, providing all around support.
d. The stretcher, quick and simple to use with various straps to secure the chest, arms and lower legs. The head shall be held in place by non-slip forehead strap.
e. A blanket to keep the injured person warm shall be supplied along-with stretcher.
f. Necessary accessories such as a four point lifting sling, slot in carry handles, a vest style shoulder harness, a foul weather sheet, etc. shall be provided by vendor & the details of the same shall be specified and provided.
g. Each Stretcher shall be marked in block letters (in highly visible colour) with respective platform name and legend, e.g ONGC PLATFORM - ----------“.

APPROVAL: 4

Each Item shall have the Type approval/Product certification of any of the following Classification Societies
1) Lloyds Register
2) Bureau Veritas
3) Det Norske Veritas
4) American Bureau of Shipping
5) Germanischer Lloyds
6) Nippon Kaiji Kyoki
7) Indian Register of shipping
Necessary Certificates towards the same shall be furnished.

15.4 Eye Wash and Safety Showers and Portable Eye wash bottles 4

Eye Wash and Safety Showers: (Combination Unit)

Safety showers and eye wash stations shall be provided complying with the provisions of ANSI Z358.1/IS-10592 (latest editions).

APPROVAL: 4

Each Eye Wash and Safety Showers shall have the Type approval/ Product Certification to specified standard ANSI Z358.1/IS-10592, latest edition by any of the following Classification Societies
1) Lloyds Register

Bureau Veritas
2) Det Norske Veritas
3) American Bureau of Shipping
4) Germanischer Lloyds
5) Nippon Kaiji Kyoki
6) Indian Register of shipping

Necessary Certificates shall be furnished in this respect.

Floor mounted Eye wash and safety shower units shall be provided on the platform in process areas and locations where hazardous chemicals are being used or handled as for immediate/ emergency use. In addition eye wash facilities shall be provided in areas where battery acid could be used.

Eye wash facilities shall be permanently connected to a source of Potable water supply. 4

Eye/face wash shall be operated by means of foot pedestal operated valve and the emergency safety shower may be actuated by a step-on foot valve which may be of the self-closing type, or hand-operated stay open type which may be operated by a chain or pull rod at an easily accessible level from the floor. 4

Emergency shower head shall be capable of delivering a minimum of 110 l/min of water Eyewash fountains are usually provided with a pair of eyewash heads and a receptacle for collection and drainage of spilled water. It shall be capable of operation by either a self-closing or a stay-open valve. Eyewash head shall be provided with built-in pressure and combined flow compensation so as to regulate the flow of water at the eyewash heads at approximately 16 l/min per head. 4

Water spray pattern for safety shower shall be minimum 20” diameter at 60” from standing level. Shower height shall not be less than 82” and not more than 96” from standing.

The nozzle of the eye/face wash should be designed to produce a soft spent stream. The height of the nozzle for eye/face wash shall not be less than 33” and not more than 45” from standing level.

Control valve & actuator shall be stay ON type and OFF to ON shall be in one second.

Stand pipe shall be corrosion resistant material and the unit shall be provided with impact/chemical resistant cycolac deluge shower head and receptor.

The eye/face wash shall have corrosion/impact resistant bowl with twin fountain heads.

All external hardware shall be suitable for offshore service where the atmosphere is salt laden and corrosive. MOC of the safety shower and Eye wash units shall be SS-316L 4

The complete unit shall be hydraulically tested at a pressure 1.5 times the maximum operating pressure.

Portable Eye wash Bottles 4

Portable eye wash bottles shall be provided for immediate flushing of eyes. The quantity and location of Eye wash &Safety showers and Portable Eye Wash bottles on the platform, together with requirement given elsewhere in Bid document for Eye wash and Safety showers shall be established during Safety studies and detailed design phase by the contractor and shall not be less than the quantity as defined in the Scope of work of the Bid Document.

15.5 First Aid Kit

Following items shall be provided as minimum in the First Aid Kit and shall meet OSHA requirement:-

Sl. No	Description	Quantity
1	Small size Roller Bandages, 1 inch wide (Finger Dressing small)	6 Pcs
2	Medium size Roller Bandages, 2 inch wide (Hand & Foot Dressing)	6 Pcs
3	Large size Roller Bandages, 4 inch wide (Body Dressing Large)	6 Pcs
4	Large size Burn Dressing (Burn Dressing Large)	4 Pkts
5	Cotton Wool (Sterilized)	4 Pkts
6	Antiseptic Solution (100 ml)	2 bottles
7	Mercurochrome Solution (100 ml) 2% in water	2 bottles
8	Ammonia Solution (20 ml)	1 bottle
9	Pair of Scissors	1 Pcs
10	Water Proof Adhesive Plaster (1.25 cm X 5 m)	1 Roll
11	Eye pads in Separate Sealed packets	4 Pcs
12	Tourniquet	1 nos.
13	Rust less Safety Pins	1 dozen
14	Tinc. Iodine / Beta din (100 ml)	1 bottle
15	Polythene Wash Cup for eye washing	2 nos.
16	Potassium Permanganate (20 gms)	1 Pkt
17	Tinc. Benzoine (100 ml)	1 bottle
18	Triangular Bandages	8 nos.
19	Pre-medicated Adhesive Dressing Strips	12 nos.
20	Antiseptic Ointment	1 tube
21	Burn Ointment	1 tube
22	Tongue Depressor	1 nos.

23	Boric Acid Powder (20 gms)	2 Pkt
24	Sodium Bicarbonate (20 gms)	1 Pkt
25	Dressing Powder	1 bottle
26	Toothache Solution	1 nos
27	Roller Bandages	4 nos
28	Absorbent White Gauge	1 Roll
29	Ophthalmic pads	2 nos
30	Aspirin Tablets	1 Tin
31	Inflatable Splints (arm, leg)	4 sets
32	Tweezers	1 Pair
33	Forceps	1 nos
34	Mouth to Mouth Resuscitation, Plastic consists of a short oral airway with a non-return valve	2 nos
35	First Aid Manual containing instructions for first aid as well as mouth to mouth resuscitation	1 nos
36	Silica-gel or any other dehumidifier	

The container shall be of industrial grade, weatherproof box made of fiberglass or steel sheet. The container shall be suitable for mounting on a wall as well as being carried in hand.

All the contents shall be kept in clearly marked and easy to remove cartons stored in such a manner that there is no rattling or spilling over even when the container is being moved. Wherever applicable the cartons shall bear instructions for use, dosage etc.

When container is made of sheet metal it shall be painted black outside and white inside with a good quality weather resistant paint suitable for use in moist saliferous atmosphere.

Each First Aid Kit shall be marked in block letters (in highly visible colour) with respective platform name and legend, e.g. ONGC PLATFORM –-----“

The quantity and location of First Aid Kit on the platform, together with requirement given elsewhere in Bid document for First Aid Kit shall be established during Safety studies and detailed design phase by the contractor.

15.6 Noise Limits

Noise levels shall be limited in order to:

- Minimize the risk of hearing damage to personnel in work areas
- Ensure that warning signals are audible
- Maintain working efficiency

The design of the facility shall minimize the noise levels to the lowest practicable. As a minimum they shall not exceed the recommended vibration levels as stated in UK HSE

Offshore Technology Report OTO 2001/068 & Specification for Equipment Noise Limit 5002.

15.7 Helicopter Rescue Kit 4

Minimum requirements for Helicopter Rescue Kit to be installed on the offshore platform.

Contents

The Helicopter Rescue Kit shall consist of the following items as minimum.

i.	Heavy Duty Crowbar	2 Nos
ii	Rescue Axe/Fire axes, Large, Non Wedge or Aircraft Type	2 Nos.
iii.	Bolt Cutter	1 Nos.
iv.	Fire Blanket	2 Nos.
v.	Safety Hands Lamps	2 Nos.
vi.	Fire Protective Clothing	2 Sets
vii.	Heavy Duty Hacksaw	2 Nos.
viii.	Heavy Duty Hacksaw Blades	6 Nos
ix	Rescue Knives	2 Nos.
x	Large Adjustable Wrench	1 Nos
xi	Hook, Grab or Salving	1 Nos
xii	Rescue Ladder (Combination type)	1 Nos
xiii	Lifeline, Harness (sufficient length)	1 Nos
xiv	Large Plier Side Cutting	1 Nos
xv	Set of assorted Screw drivers	1 Nos
xvi	Harness knife C/W Sheath	1 Nos
xvii	Gloves Fire Resistant (Pair)	1 Nos
xviii	Self-Contained Breathing Apparatus (complete)	2 Nos
xix	Red Signal Torch	1 Nos
xx	Hammer	1 Nos
xxi	Plate Scissors	1 Nos
xxii	Pincer	1 Nos
xxiii	Jack	1 Nos

The material of all the above items to be suitable for the service intended and shall also suit the site conditions (saliferous marine environment).

Container and Package

The Container shall be made of SS-304 material and the base channel shall be 100 mm x 50 x 5mm thick. It shall be suitable for bolting on to Deck Plate and overall container shall be less than or equal to 1.6 m. L x 0.5m Width x 1.0 m Height.

The Helicopter Rescue Kit shall be installed near the Helideck.

Each First Aid Kit shall be marked in block letters (in highly visible color) with respective platform name and legend, e.g. ONGC PLATFORM –-----"

4

Approvals

Each Fire Blanket, Safety Hand Lamps, Fireman's Protective clothing, Fire resistant Gloves, Self-contained breathing apparatus complete shall carry the Type Approval((or the EC Type Approval if pertinent),/Individual Product Approval Certificate of any of the following Classification Societies

1) Lloyds Register
2) Bureau Veritas
3) Det Norske Veritas AS
4) American Bureau of Shipping
5) Germanischer Lloyds
6) Nippon Kaiji Kyoki
7) Indian Register of shipping

Supporting Certificates shall be furnished in this respect.

15.8 Vibration Limits

Vibration levels shall be limited in order to:

- Prevent a health hazard to personnel
- Maintain proficiency of personnel in performing designated tasks.

The design of the facility shall minimize the vibration to the lowest practicable levels. As a minimum they shall not exceed the recommended vibration levels as stated in UK HSE Offshore Technology Report OTO 2001/068 & Specification for Equipment Vibration 5004.

15.9 Hot Surface Protection

Personnel protection against accidental contact with hot surfaces of equipment shall be provided. This shall, as a minimum, be in accordance with API RP 14C (section 4.2.5) requirements

4

15.10 Personnel Protection Equipment (H_2S Exposure)

Following are the minimum requirements for Personnel Protection Equipment in case of exposure to H_2S (Hydrogen Sulphide) to be kept on the offshore platform.

A) H_2S Capsule

4

H_2S Capsule shall be provided on the platform as per scope of work. However, Contractor shall carryout safety studies and the number of H2S Capsules, their capacity

(number of persons), and their location shall be decided during detailed engineering phase as per the recommendation of safety studies.

However, the minimum duration of stay in the shelter shall be as per the scope of work given elsewhere in the bid document.

H_2S Capsule shall contain the following as minimum:

i- Portable Breathing Air Pack: - Self- contained breathing apparatus with oxygen cylinder(s), face mask; eyeglass etc. complete shall be supplied. Self- contained breathing apparatus shall provide 30 ~~to 45~~ minutes of nominal protection.

ii- Rolls of LEAD Acetate (sensitive) Paper: - shall be provided to detect the presence of H_2S in the capsule.

iii- Eye Goggles (Non vented)

iv- H_2S safety information charts: - H_2S safety information charts shall be provided with symptoms and effects owing to various levels of H_2S (in PPM) in atmosphere. The H_2S safety information charts shall be of suitable material with proper lettering, which can withstand outdoor offshore environment

v- Power Packs:-

(a) Explosion proof battery box, provided with 4 batteries 12 V – 36 Ah (interconnected for 24 V DC), 2 control fuses, 2 cable entries.

(b) Explosion proof battery charger housing provided with 1 battery charger 10A – 240V AC supply, 2 cable entries.

vi- Eye wash station, washing soap, towel, etc.

vii- Respiratory Protective Equipment (Escape mask etc.)

viii- Air purge system

ix- Exhaust Fan, Class 1, Div. 1, 24V DC

x- Incandescent Light Fixture with bulb, 60 Watt, 24V DC

xi- Push button station for communication

xii- Explosion proof junction box on exterior for power, 24V DC

xiii- Portable H_2S detector

xiv- Air cylinders with air control inside based on the size of the H2S capsule. The reserve or stored air capacity of the cylinder bank should be adequate to support the persons inside the capsule for a period of minimum duration of stay as specified elsewhere in the bid document without recharging

xv- Explosion proof junction box on exterior for RTU, 24V DC

xvi- Flow meter.

H2S Capsule shall carry the Type Approval / Individual Product Approval Certificate (as applicable) of any of the Classification Societies/Competent statutory authority as recognized by the Government of India. Adequate certificate shall be furnished in this regard.

B) H_2S safety information charts

H_2S safety information charts shall be provided with symptoms and effects owing to various levels of H2S (in PPM) in atmosphere. The H_2S safety information charts shall be of suitable material with proper lettering, which can withstand outdoor offshore environment.

C) LEAD Acetate Paper

LEAD Acetate Paper shall be provided to detect the presence of H_2S on the platform.

D) Eye Goggles

Cup type or rubber framed equipped with approved impact resistance glass or plastic lenses

E) Eye wash unit:- 4

Complete unit of self-contained eye wash facility shall be provided for a minimum of 15 minutes of decontaminated water flow for immediate flushing of eyes complying with the provisions of ANSI Z358.1 (latest editions) for eye wash units.

All the items shall be kept in clearly marked and easy to remove container. The packing shall be of such quality to ensure long life of the items. The container shall be suitable for offshore environment.

All the items shall carry the Type Approval / Individual Product Approval Certificate (as applicable) of any of the Classification Societies/Competent statutory authorities as recognized by the Government of India. 4
Adequate certificate shall be furnished in this regard.

16.0 WARRANTY

Vendor shall have final and total responsibility for the mechanical performance of all equipment supplied under this specification. Vendor shall warrant the equipment furnished by him and the performance of the said equipment in accordance with this specification and the attached general specification.

17. HAZARDOUS SUBSTANCES

17.1 Storage Requirements

Facilities shall be provided for the storage of all hazardous substances. They shall provide protection to personnel on the platform from the effects of the substances and where

necessary provide protection to the substances themselves from the effects of credible major accidents on the facility.

Storage facilities shall take into account the manufacturers/suppliers storage requirements.

Hazardous substances for which storage facilities shall be provided (and the storage requirements) include, but are not limited to:

- Solvents, paints and oils: To be stored only in small quantities. Where larger quantities may be required these shall be installed in lockable containers in open areas of the deck.

- Pressurized gas cylinders: To be stored in banks with protection from direct sunlight. Flammable substances shall be stored separately from bottles of oxygen.

- Chemicals: To be stored separate from other chemicals that might cause a reaction in accordance with the manufacturers recommendations.

17.2 Handbooks

Handbook shall be provided with coverage of all hazardous materials with guiding tips for first aid, rescue etc.

FUNCTIONAL SPECIFICATION

FOR

PROCESS GAS COMPRESSOR (Gas Turbine Driven)

PREPARED BY	REVIEWED BY	APPROVED BY	TOTAL No. OF PAGES	DATE	REV. No.
KS	BKC	PK	100	28.07.23	5
KS	NM	AJ	100	21.03.18	4
BG/PLN	VBD	JSS	103	05.03.08	3
SRP	SKG	JSS	96	04.01.07	2
SKT	SKG	JSS	96	20-06-05	1

CONTENTS

1. **INTRODUCTION**

   1.1 Scope/General
   1.2 Contractor Responsibilities
   1.3 Experience/ capability requirement

2. **STANDARDS, CODES AND REFERENCE DOCUMENTS**

   2.1 Codes and Standard
   2.2 Reference Specifications

3. **SCOPE OF SUPPLY**

   3.1 Compressor Unit
   3.2 Gas Turbine Driver
   3.3 Electrical
   3.4 Controls and Instrumentation
   3.5 Lube Oil and gas coolers-Air Cooled Heat Exchangers
   3.6 Suction, Inter stage and Discharge KOD
   3.7 Module unit
   3.8 Miscellaneous
   3.9 Special Studies
   3.10 Testing
   3.11 Installation, Pre-commissioning and Commissioning
   3.12 Spares
   3.13 Special Tools

4. **ENVIRONMENTAL DESIGN CRITERIA AND UTILITIES**

   4.1 Climatic Conditions
   4.2 Design Life, Availability and Reliability
   4.3 Area Classification

5. **BASIC DESIGN**

   5.1 General
   5.2 Process Gas Compressor Train Performance

5.3 Compressor
5.4 Gas Turbine Driver
5.5 Couplings and Gear Boxes
5.6 Lube Oil System
5.7 Seal System
5.8 Gas Coolers and KODs
5.9 Acoustic Enclosure and Ventilation
5.10 Module Shelter
5.11 Materials
5.12 Welding
5.13 Piping
5.14 Electrical
5.15 Instrumentation and Controls
5.15.1 General
5.15.2 Field Instrumentation
5.15.3 Integrated control/ Safety Instrumented system
5.15.4 Integration with other Instrumentation system of platform
5.15.3 Miscellaneous items inclusive of Hook up materials
5.16 Fire and Gas detection and suppression
5.17 Mounting Plates
5.18 Insulation

6. **INSPECTION, TESTING AND CERTIFICATION**

6.1 General
6.2 Quality Assurance
6.3 Shop Inspection and Testing
6.4 Material and Welding Inspection
6.5 Gas Compressor
6.6 Unit Control Panel (UCP)
6.7 Hydrostatic Tests
6.8 Shop Tests
6.8.1 Performance Tests
6.8.2 Mechanical Running Test
6.8.3 Noise Test
6.8.4 Offshore Performance Test

7. **SPARE PARTS & TOOLS**

7.1 Spare Parts
7.2 Special Tools

8. **CONTRACTOR DATA REQUIREMENTS**

8.1 Documentation
8.2 Special Studies

9. **PAINTING AND PREPARATION FOR SHIPMENT**

9.1 Painting and Protective Coating
9.2 Preparation for Shipment

10. **WARRANTY**

Annexure I - Instruments and Annunciator list

Annexure CP - Experience record Compressor/ gas turbine/Control Panel – Train/Module

Annexure C - Experience record Centrifugal Compressor

Annexure GB - Experience record Gear Box

Annexure GT - Experience record Gas Turbine

Annexure VDL - Vendor data requirements

1 INTRODUCTION

1.1 General

This specification together with P&Id's, other specifications, codes and standards describes the minimum requirements for design, procurement, fabrication, assembly, inspection, testing, painting of Gas Turbine Driven Centrifugal Compressors complete with all associated auxiliaries and control to be packaged and supplied as compression modules.

1.2 Contractor Responsibilities

The LSTK contractor shall be overall responsible for the complete design, manufacture, supply, inspection, testing, preparation for shipment for the Process Gas Compressor Module, including full compliance with all applicable design codes and standards, including those listed in Section 2.0 of this Specification.

The responsibilities of Compressor vendor and Compressor train vendor (CTV) are detailed in the subsequent clauses.

1.3 Experience/Capability Requirements

Unless otherwise specified else where, the equipment qualification criteria (EQC) specified below shall be applied for acceptance of the offered PGC module.

1.3.1 Centrifugal Compressor

- The compressor model offered shall be from regular manufacturing range of the vendor and shall meet the following minimum service and manufacturing experience requirements:

- The GT driven Compressors shall be similar as specified in the Annexure-C as compared to at least TWO UNITS designed, manufactured, tested and supplied from the proposed manufacturing plant in the last fifteen years and at least ONE of these units shall have been operating satisfactorily in the offshore Oil & Gas field for at least

8000 hours without any major problems prior to the dead line of submission of bids.

1.3.2 Gear Box / Auxiliary Equipment

a) The gear box shall meet the following minimum service and manufacturing experience requirements:

Gear box offered shall be from regular manufacturing range of the vendor and shall be similar to the parameters as specified in the Annexure-GB as compared to at least two units produced by the Vendor at the proposed manufacturing plant. At least one of these gear boxes must have been operating satisfactorily in the offshore Oil & Gas field for at least 8,000 hours without any major problems prior to the dead line of submission of bids. Vendor shall furnish information on Experience record proforma attached with this specification.

b) The offered model of Dry Gas seal shall be proven and validly similar in terms of experience in specified process gas service, size, speeds, sealing pressures and configuration as compared to at least two units designed, manufactured, tested and supplied from the proposed manufacturing plant and at least ONE of these shall have been successfully operated in field for at least 8000 hours without any major problems.

Past supply Experience list of the seal manufacturer, for the offered model of seal, shall be furnished justifying that acceptance criteria is met.

1.3.3 Gas Turbine

a) Unless otherwise specified elsewhere, the Equipment Qualification Criteria (EQC) specified below shall be applied for acceptance of the offered gas turbine model.

Vendor shall be an established gas turbine manufacturer having adequate design engineering, manufacturing and testing facilities.
The gas turbine model offered shall be from the existing regular production range of the vendor, and the rating offered shall be based on internationally published rating.

Gas Turbine shall be identical with the parameters as specified in Annexure-GT compared to at least TWO UNITS produced tested and supplied for mechanical drive application by the vendor from proposed manufacturing plant for offshore platform installation. As a minimum ONE of the above gas turbines must have completed 8000 hours of trouble free operation at the specified operating conditions on offshore platform installation, prior to the dead line of submission of bids.

Proven Track Record

Gas Turbine vendor shall complete the Experience Record Pro-forma as enclosed in Annexure-GT to amply prove that the Equipment offered meets the EQC for technical acceptance. Turbine vendor may furnish additional information to justify that the EQC is being met. In addition, manufacturer's catalogue and general reference list for all the above equipment shall also be furnished along with the proposal.

b) Control Panels and Control Systems offered shall be identical or validly similar to at least Two units assembled, tested, and supplied for the offered GT model from the proposed manufacturing shop, out of which one should be working satisfactorily for at least 8000 hours in offshore service.

1.3.4 **Compressor Train / Compressor Module**

1.3.4.1 **Compressor Train**

1.3.4.1.1 The **Compressor train** is an integrated system which includes centrifugal compressor, gas turbine, couplings, Anti Surge Control Valves & their controller, dedicated Secondary Fuel Gas Conditioning Skid, gear box (if any), control panel, complete instrumentation, machine control & safety systems and auxiliary systems like lub oil system, sealing system, temperature monitoring system, vibration monitoring system etc.

Bidder to confirm the same.

1.3.4.1.2 The **compressor train vendor (CTV)** should have in the last 15 years engineered, assembled, packaged and supplied at least one compressor trains similar to or in the range of the offered compressor train for offshore installation. The compressor train offered by compressor train vendor shall be comparable in terms of the following: (Bidder to submit Annexure CP as

5

per FS 5404 (PGC) duly filled in by CTV in support of the same along with their offer)

Compressor operating parameters, Power rating, size and type of main equipment (i.e. compressor, gas turbine, etc.)

1.3.4.1.3 The CTV has to give an undertaking that at least one such Compressor train (installed train/s as indicated in the Annexure CP) should have been operating satisfactorily for 8000 hrs on offshore installation and during that period achieved the levels of availability and reliability of minimum 95%.

1.3.4.1.4 Individual equipment of the Compressor Train offered viz. (centrifugal compressor, gas turbine and gear box (if any)) shall meet the operating parameters as per Tender document and respective past experience as per this FS and FS 5501 (Gas Turbine) provided in the tender documents. Compressor vendor to submit duly filled Annexure C & Annexure GB (if any) as per this FS and Gas Turbine vendor to submit Annexure GT as per FS 5501 (Gas Turbine). The offered model of the Compressor, Turbine & Gearbox (if any) and model of the previously supplied Compressor, Turbine & Gearbox (if any) in Annexure C, GT and GB respectively shall be similar or identical.

1.3.4.2 The compressor train vendor shall be the compressor manufacturer or turbine manufacturer supplying the compressor or the gas turbine for the compressor train. Bidder, along with his offer shall furnish a written confirmation from the Compressor Train Vendor (CTV) to confirm that he shall be overall responsible for the entire train.

1.3.4.3 Irrespective of who supplies the compressor train, the compressor manufacture shall supply PFDs, P&IDs, safe charts and sizing of various equipments such as K.O. drums, coolers, ASC valves, , blow down systems etc. as well as compatibility checks for all equipment such as K.O. drums and control system during detailed engineering for PGC modules.

Compressor manufacturer shall also check and confirm the suitability and adequacy of the Gas Turbine driver and gear box (if any). Process Gas Compressor Train performance sheet as per this FS and data sheets of compressor and turbine to be provided in support of suitability and adequacy.

The bidder along with his bid shall furnish a written confirmation from the Compressor manufacturer for undertaking the activities defined above.

The bidder along with his bid shall furnish an undertaking from CTV confirming that the supply of secondary fuel gas conditioning skid from Gas Turbine vendor and Anti Surge Control Valves & their controller from Compressor vendor.

1.3.4.4 In case the gas turbine manufacturer (supplying the gas turbine for the subject compressor train) is compressor train vendor, the following conditions must be fulfilled by the gas turbine manufacturer:

- Review of the overall Compressor scheme including PFDs and P&IDs and all other design details, sizing, compatibility checks which are prepared by the compressor manufacturer. This shall be done during detailed engineering for module.

- A written guarantee from the compressor manufacturer for undertaking the activities, defined in clause 1.3.4.3 shall be furnished by the turbine manufacturer along with the bid.

1.3.4.5 **Compressor Module:** The Compressor train along with Knock Out Drums, coolers, complete piping from module isolation valve at inlet to module isolation valve at outlet, shall be built into a single lift structural module is called Compressor module. Two or more compressor trains can be built into a single lift structural module based on the lifting capacity of the derrick barge proposed by the bidder. Compressor module, besides the above equipments, shall be complete with auxiliaries, module F&G detection and suppression system, supports, maintenance provision and all other items to make complete operable compressor module.
Bidder to confirm the same.
This single lift installable module may not be applicable for Bidder offering Float over option of deck installation.

1.3.4.5.1 The LSTK contractor shall take full responsibility for fabricating, assembling the entire compressor module as described above at para 1.3.4.5 in a yard where at least one similar gas compressor module for offshore installation have been fabricated and assembled in last Fifteen years. 5

Bidder to submit commitment letter from the proposed yard along with details such as fabrication/ shop facilities, experience/ track record, purchase orders & completion certificates, valid accreditation certificate, inspection and QA/QC plans and capabilities, test facilities available etc.

1.3.4.5.2 The complete testing of the Compressor Module shall be the responsibility of CTV. The facilities required for testing e.g. instrumentation, utilities etc. shall be the responsibility of LSTK contractor.
Undertaking from bidder as well as compressor train vendor to be submitted.

LSTK contractor shall also submit along with their techno-contractual bid an undertaking that they shall be fully responsible for execution of entire project including Gas Compressor module, its acceptance after carrying out required tests by certification agencies/TPI as per scope of work. Bidder is also responsible for passing on all the required warranty / guarantee certificates, software key etc. from respective vendors to ONGC.

1.3.4.5.3 Deleted.

5

1.3.4.5.4 LSTK Contractor shall furnish an undertaking that the manufacture and quality control of the complete module shall be solely his responsibility.

1.3.4.5.5 Bidder shall submit along with their techno-contractual bid an undertaking from compressor, turbine and gear box (if any) OEM that they shall provide to ONGC the post-warranty service/ spares for a period of 15 years from the date of supply of the equipment and that the response time for offering such service/ spares from OEM's shall not exceed two weeks from the date of written request from ONGC**.** The OEM undertakes to enter into Annual Maintenance contract for 'lifetime' for all the equipment to be supplied under the contract, if awarded to him by ONGC. In case the OEM declines / fails to honour any of his above commitments, business dealings with such OEM shall be considered for banning from future business dealings. On award of work OEM will furnish the price list of the following mentioned equipment spare parts along with the backup papers:

a) Process gas compressor
b) Gas Turbine
c) Gear Box (if any)

In LSTK contract, in case of any difficulty in submitting above commitments from any OEMS at the bidding stage, the bidder shall submit his own undertaking to the effect that the undertaking required above from those OEM(s) will be furnished at the detailed engineering stage. However, in case successful bidder fails to submit the same at the detailed engineering stage, ONGC reserves the rights to cancel the contract, forfeit the performance security and take suitable action for banning such bidders from the future business details with ONGC as deemed fit.

1.3.4.6 The engineering and design of complete module (other than the engineering defined in the scope of compressor manufacturer at clause 1.3.4.3 above) shall be done either by compressor train vendor himself OR his Engineering sub contractor who has the requisite experience of such engineering for compressor modules for carrying out basic as well as detailed engineering and meets the experience capability requirements of engineering at least one compressor module in the last Fifteen years. Bidder to specify the name of agency along with the commitment letter from agency and details/ supporting documents of agency for design and engineering in this regard. However in case of float over method, the structure engineering of the module shall be done by the design consultant of the LSTK contractor in consultation with CTV. 5

1.3.5 **Proven Track Record**

The vendor shall complete the Experience Record forms as enclosed in

- Annexure – GB for Gear Box,
- Annexure – C for Centrifugal compressor,
- Annexure – GT for Gas turbine
- Annexure – CP for packaging experience of Train /module

to amply prove that the Equipment offered meets the EQC for technical acceptance. Vendor may furnish additional information to justify that the EQC is being met. In addition, manufacturer's catalogue and general reference list for all the above equipment shall also be furnished along with the proposal.

The Contractor shall provide evidence of continued trouble free operation of similar equipment that meets the requirements detailed above.

2 STANDARDS, CODES AND REFERENCE DOCUMENTS

2.1 Codes & Standards

The Process Gas Compressor Module shall be designed, manufactured, certified and tested in accordance with the requirements of this Specification, referenced project specifications and the latest revision of the following codes, standards and statutory regulations:

ASME Section-II, Div-I	:	Boilers and Pressure Vessel Code- Materials
ASME Section-VIII, Div-I	:	Boilers and Pressure Vessel Code
ASME Section-IX	:	Boilers and Pressure Vessel Code- welding and Brazing qualification
ASME PTC 10	:	Power test codes for Compressors and Exhausters
ASME PTC 22	:	Performance test code for Gas Turbine Power Plants
ANSI	:	American National Standards Institute
ANSI B 1.1	:	Screw threads
ANSI B 16.5	:	Steel pipe flanges and flange fittings
ANSI B 31.3	:	Codes for Chemical Plant and Petroleum Refinery piping
API RP 14C	:	Analysis, Design, Installation, Testing of Basic Surface Safety Systems for Offshore Production Platforms
API-RP-14 E	:	Recommended practice for Design and installation of offshore production platform piping system
API RP 14F/14FZ	:	Design & Installation of Electrical system for offshore production system
API RP 14G	:	Fire prevention and control on open type offshore production platforms
API RP 500/ 505	:	Electrical Hazardous Area Classification
API RP 550	:	Installation of Refinery Instruments and control system
API 610	:	Centrifugal Pumps for General Refinery Service
API 613	:	Special purpose gear units for Refinery Services
API 614	:	Lubrication shaft sealing and control oil system of special purpose application

API 616	:	Gas Turbine for the petroleum, chemical, and Gas industry
API 617	:	Centrifugal Compressors for petroleum, chemical and gas service industry
API 650	:	Welded Steel tank for oil storage
API 660	:	Shell and Tube Heat Exchangers for General refinery services
API 661	:	Air Cooled Heat Exchangers for General Refinery Services.
API 670	:	Machinery protection system
API 671	:	Special purpose coupling for Refinery Services
API 676	:	Positive Displacement Pumps – Rotary
API 677	:	General Purpose Gear Units for Refinery Services
API 682	:	Pumps-Shaft Sealing Systems
ASTM	:	American Society for Testing and Material
AGMA	:	American Gear Manufacturer's Association
AGMA Std 421	:	Practice for High-Speed Helical and Herringbone gear units
AWS D 1.1	:	Structural welding code
NACE-MR-01-75	:	Sulfide Stress Cracking Resistant Metallic Materials for Oil Field Equipment
NEC	:	National Electrical Code
NEMA	:	National Electrical Manufacturers Association
NFPA codes	:	National Fire protection Association
PESO		Petroleum and Explosives Safety Organisation

2.2 Reference Specifications

The Process Gas Compression unit(s) covered by this Specification shall be designed, manufactured and tested in accordance with the requirements of the following functional specifications:

SPEC NO	Description
Vol II	Description of work- Mechanical
Vol II	Mechanical design criteria
5001	Functional specification for centrifugal pumps

5002	Specification for noise limit
5004	Specification for equipment vibration
5100P	Specification for packaged equipment – Process platform
5102	Functional safety specification
5086F	Functional specification for rotary gear pump
5501F	Functional specification for gas turbine
5601	Functional specification for unfired pressure vessel
5701F	Functional specification for air cooled exchanger
5702F	Functional specification for shell and tube exchanger
VOL II	Electrical design criteria
FS 4017	Functional specification for electrical equipment of packaged plant
FS 4008	Functional specification for Electrical motors
Vol II	Piping design criteria
2004-A	Functional specification for piping design
2004-B	Functional specification for piping fabrication and installation
2006	Functional specification for insulation of piping and equipment insulation
2009F	Functional specification for welding and NDT
Vol-II	Basic bid work - Instrumentation
Vol - II	Instrumentation Design Criteria
Vol – II	Structural Design Criteria
Vol - II	Design Criteria Architecture
6001F	General specification for Material, Fabrication & Installation of Structure
6011	Specification for Building Module
2005	Specification for protective coating

3 SCOPE OF SUPPLY

Each **Compressor** module as defined above shall be provided with an all weather shelter and ready for installation at offshore process platform with minimum offshore work.

Each module will be a complete system and shall include all required ancillary equipment to meet the design conditions and environmental conditions as specified. The module shall be ready for operation requiring minimum offshore hook up, details of which shall be included by contractor in the offer.

The P&ID's / PFD's and drawings included in the bid also indicate minimum process controls / instrumentation and monitoring required. Any additional instrumentation & Controls required shall be included in Scope of supply of the Vendor.

Vendor's suggested control and operating schemes for operation of compressors shall be subject to Company's approval. Necessary changes suggested by Company shall be incorporated without any cost/time implication.

The scope of supply shall at least include the following equipment and auxiliary systems. Any equipment that is required for safe operation and shutdown of the Process Gas Compressor (PGC) but not specifically identified herein shall also be included in the scope of supply.

3.1 Compressor Unit

- Base plate mounted centrifugal compressors
- Proven sealing system including instrumentation, vents, piping, filtration, valves, traps etc.
- Lube oil system including reservoir, pumps, motors, piping, filters, valves, air cooled heat exchanger, structural base and mountings.
- Emergency Lube oil system
- One Complete compressor washing system (for single or multiple compressor trains) in a module.
- Anti surge control system with ASC valve.

3.2 Gas Turbine Driver

- Gas generator and power turbine and all associated equipment.
- Acoustic enclosure for gas turbine (and gearbox, if required)
- Gas generator ancillary equipment including, fuel system, lube and hydraulic oil console with all fittings, coolers and accessories as required, support system, instrumentation, starter system, ignition system, bleed valves and ducting etc.
- Dedicated secondary fuel gas conditioning skid.
- Air Inlet and Exhaust Systems for Gas Turbine including intake air filters, ducting, inlet/ exhaust silencers, etc.

- One no. on-line and off-line detergent/ water wash system for each PGC module. In addition Demineralized water plant if required by Turbine vendor for PGC module.
- Complete Ventilation System for Gas Turbine Enclosure.
- Fire and gas detection and suppression in the enclosure.
- Material handling for equipment inside the enclosure

3.3 Electrical

- All equipment within Module (eg. motors, switch gear equipment for both AC/DC systems, lighting boxes)
- A battery and battery charger system to meet the DC requirements of the PGC module
- DC / AC motor starters
- All cabling, junction boxes and terminal boxes within the Contractor's package/module
- Cable trays for power and control cables within Contractor's package/module
- Power and lighting within acoustic enclosures and air filter housing including cables, terminals, junction boxes.
- Module shelter lighting system.
- Earthing connections for all equipment
- Thyristor Panel for fuel gas conditioning.
- Flameproof plugs and sockets
- Starter panel for Portable pump/ Oil purifier / Washing unit
- Control & Starter panels for material handling equipments

3.4 Controls and Instrumentation

Controls and Instrumentation for Process gas compressor module shall be dedicated for each Process gas compressor and shall be inclusive of the following as a minimum:

3.4.1 Field Instrumentation.

- Gauges shall be provided for the service of pressure, differential pressure (dp), dp based flow elements, temperature, level, etc related to process/ utilities/ equipment.

- Transmitters shall be provided for the service of pressure, differential pressure (dp), flow, temperature, level, equipment parameters etc related to process/ utilities/ equipments facilities.
- Switches shall be provided for the service of pressure, differential pressure (dp), flow, temperature, level, equipment parameters etc related to process/ utilities/ equipments facilities.
- Fire, heat/ thermal, & gas detectors.
- Final control elements like control valves, shutdown valves, etc.
- Pressure relieving devices like safety valves, relief valves, safety relief valves, thermal relief valves.
- Specialized machine monitoring sensors inclusive of Vibration & Temperature sensors.
- Local ESD & FSD push buttons.

3.4.2 Integrated Control / Safety Instrumented system.

- Each process gas compressor module shall be provided with dedicated integrated control / safety instrumented system for the purpose of implementing controls, sequencing, optimization, safety instrumented functions for entire module inclusive of PGC, Gas Turbine Driver, related auxiliaries & accessories. Main control/ safety instrumented system panel shall be called Unit Control Panel (UCP) and shall be housed in SAFE area/ Control Room. Operator / engineering interface station shall be an integral part of the UCP.
- Beside UCP, Local Control Panel (LCP) / Local Gauge Board Panel shall also be provided.
- Vibration monitoring, alarm and shutdown system.
- Temperature monitoring, alarm and shutdown system.
- On-package control of fuel gas including venting of all on-package fuel gas
- Starting, loading and shut down requirements.
- Anti-surge control and recycle control systems including control and recirculation valves
- Independent Load sharing control system (including master controllers / performance controller) as required.
- Contractor shall provide a laptop PC for programming and maintenance of UCP/ LCP, complete with all required software, hardware and all accessories inclusive of cables, adapters, carrying case, etc to permit up-loading and down-loading of data and programs to the UCP/ LCP.

3.4.3 Integration with the other Instrumentation systems of the platform.

- Dedicated redundant Serial communication interface for each process gas compressor UCP with platform DCS / ICS (process control and monitoring system).
- Hardwired interfaces for each process gas compressor UCP with platform safety instrumented systems, viz., platform ESD PLC, platform Fire & Gas detection system.

3.4.4 Miscellaneous.

- Scope shall also include all hook-up works related to controls & instrumentation activities outlined in this specification and shall be inclusive of Junction Boxes, tubing / piping, tube trays, fittings, interconnecting cables, cable glands, plugs, cable trays, supports, MCTs, etc.

3.5 Lube Oil and Gas coolers - Air Cooled Heat Exchangers

- Tube bundles / headers
- Low noise fans with guards
- Motors, transmissions
- Fan plenum
- Local gauges and module mounted instrumentation for protection and control
- Module mounted junction boxes for instrumentation and power cabling
- Flanged pipe work terminations easily accessible for hookup

3.6 Suction, Inter stage (if required) and Discharge Knock Out Drums

3.7 Module Unit

- Complete module structure including mounting plate
- Module ventilation
- Lighting in side the module
- Fire and gas detection and suppression system (distinguish from PGC F&G system). F&G system for GT enclosure and all detectors internal to PGC train shall be with Alarm and Trip signals to ICS of platform
- Weather Shelter
- Material handling facilities in the module
- Interconnecting piping and valves within the module

3.8 Miscellaneous

- Gear Box (if required)
- Base Plate for Compressor, Gas Turbine and gear box (if any)
- Interconnecting pipe work and valves, depicted in the Module limits of the applicable P&ID drawings.
- All drains, vents, purge connections with associated termination valves for all equipment in Contractor's scope of supply. Vent and drain pipe work and isolating valves shall be brought to the Module edge and all like drains shall be manifolded.
- Steel work bench and Tool Shelf (One common for the platform) to be located on the module skid.
- Couplings, spacers and coupling guards as required
- Necessary access platforms, ladders, walkways
- Preservation and crating
- Trolley-mounted oil-transfer pumping system
- Trolley-mounted oil centrifuge
- Turbine washing system
- Storage pods for transporting and storage of compressor rotors (One pod for similar compressor rotors). Storage pod for Gas generator, if required, as per scope of work.
- Support stands for rotating elements for compressors and turbines
- All installation consumables.
- All transportation stands and containers, fixings, blanks, shipping fastenings and inhibitors etc. for 12 months storage
- All engineering, documentation, liaison, project management and support to the Company required for the timely and effective supply of items under this specification. Documentation to include installation, operating and maintenance manuals and applicable ASME code certificates approved by the certifying agency.
- Documentation.
- All interconnections between all components required under this Specification.
- Lifting frames with suitable attachment points for slings for each component required.

3.9 Special Studies

- Complete Compressor rotor dynamic and vibration calculations for the shaft assemblies

3.10 Testing

- Mechanical run test of Compressors, Gearboxes and Turbines at Manufacturer's works
- Performance/Acceptance Testing of Compressors, Gearboxes and Turbines at Manufacturer's works
- System function Testing.
- Full load - full speed (4) hour string test of module at Module fabrication Yard.
- Continuous "offshore" (72) hour full load module test at site.

3.11 Installation, Pre-commissioning and Commissioning

- Fabrication, site installation, erection, and pre-commissioning (Supervision and Specialist Assistance)
- Offshore hook-up (Supervision and Specialist Assistance)
- Commissioning procedures prepared in conjunction with the equipment Manufacturers
- Supervisory services and specialist assistance of manufacturer of equipment, during commissioning and testing at offshore

3.12 Spares

- Supply of all start up and commissioning spares including consumables.
- Priced list of spares for one year's operation
- Mandatory spares for Control system UCP in addition to that defined in Instrument Design Criteria like controllers, card chasis, communication module, power supply module, analog I/O module, digital I/O module, F&G controller, F&G I/O module

3.13 Special Tools

- Two sets (for two or more identical units) or one set (for one unit) of special tools & tackles necessary for maintenance, access and removal operations.

4 ENVIRONMENTAL DESIGN CRITERIA AND UTILITIES

4.1 Climatic Conditions

The climatic and other conditions under which the Equipment will operate are detailed elsewhere in the bid. The equipment will be operated on an offshore platform.

The Contractor is responsible for ensuring that all equipment and components provided are suitable for the utility and environmental conditions as specified during the entire design life.

4.2 Design Life, Availability and Reliability

Equipment shall be designed and constructed for continuous operation, outdoor and a minimum service life equal to the platform design life, specified else where in the bid.

The Time between Overhauls shall be minimum 30,000 hours of operation at the maximum design conditions. The contractor shall provide details of the schedule maintenance, activities including overhauls, personnel requirement and parts requirement for all scheduled maintenance activities between Start (1st hour) and Major overhaul (30,000 hours) of operation at the maximum design conditions.

The contractor shall be required to meet a specific minimum availability figure of 95%. The Contractor shall specify the estimated availability figure for this module. In addition, the vendors shall furnish its best estimates of Mean Time between Failures (MTBF) and Mean Time to Repair (MTTR) for the equipment concerned.

In making assessments of the availability and reliability, vendors will need to estimate maintenance and repair times. For the purpose of making such estimates, the vendors may assume that the spares holding is in accordance with its submitted recommendations unless otherwise stated. The vendors may also ignore any delay caused by factors not directly related to the package/module in question, unless a basis for estimating such delays is provided by the Company. In the case of failure modes that make a significant contribution to the overall unavailability, the vendors may be required to demonstrate that its assumed repair times can be achieved.

To facilitate the online preventative maintenance and calibration, the vendors shall provide necessary equipment to achieve the maximum online

availability and minimum preventative maintenance down time. Duplex oil filters, test ports, block valves and drain lines for instruments and spaces for ease of maintenance access shall be incorporated in the design to achieve the online trouble shooting and maintenance of each instrument. All instruments, solenoid valves and safety relief valves, which require periodic preventative maintenance and calibration shall be located outside the gas turbine enclosure. Fuel gas supply to secondary fuel gas conditioning skid shall have dedicated fuel gas pressure control system. Further, one more fuel gas control valve shall be provided as a part of Gas Turbine.

4.3 Area Classification

Electrical equipment shall be suitable for the applicable Hazardous Area classification according to Electrical design criteria enclosed in bid package.

5 BASIC DESIGN

5.1 General

The contractor shall be overall responsible for the process, mechanical, structural, instrumentation, piping and electrical design, sizing, material and equipment procurement, fabrication, insulation, testing and protective coating in accordance with this specification.

The module shall be ready for operation requiring minimum offshore hookup work, details of which shall be included in the offer.

The Contractor shall obtain drawing approval from the Company for all fabricated equipment and module assemblies prior to fabrication.

Contractor shall include any equipment not specified herein, which he considers necessary to make a complete, operable, safe and dependable unit.

The interconnecting piping and cables for instruments and control systems for the various pieces of equipment located on the module skid and covered by this specification shall be supplied by the Vendor.

Wherever separate working and standby pump / fan are provided, there shall be a provision for operator to select either of them as main or standby.

Equipment and piping layout shall be arranged from the point of view of ease of assembly / disassembly of major components and auxiliaries. All equipment, such as filters and other components that require on-line maintenance shall be clearly identified and located in accessible positions. Removal of other piping or equipment to provide access to maintain equipment is not acceptable. Man ways, hand holes, inspection openings, instrumentation, valves etc shall be located for ease of operation and maintenance. The equipment layout drawing shall be approved by the Company.

The contractor shall provide a list of all components of PGC module that require regular periodical inspection and maintenance. The procedure for inspection and handling of components for maintenance shall be fully described. Weight and dimensions of components that need to be dismantled and transported during maintenance shall be identified.

The Contractor's data shall include detail design drawings of all major equipment and accessories.

All detail design drawings shall be fully dimensioned and complete with bill of materials. All dimensions shall be in Metric units except for pressure which shall be in kg/cm2 (gauge) or (absolute).

Contractor shall use sound engineering judgment to complete an installation that will perform the required process function without compromising the safety and operability objectives specified for this project. The module shall be designed in accordance with API RP 14C, 14G and 14F/14FZ.

Vibration limits

Each equipment within the module shall comply with the requirements of attached Specification for Equipment Vibration -5004.

In case of Gas Turbine, Acceptable vibration limits during normal operation, shall not exceed 50 percent of manufacturers published alarm set point values. Summary data from previously tested units shall be furnished with the proposal to justify the quoted acceptable vibration limits.

Vibration limits for Gear Box shall be as per API-613 and for compressor as per API 617.

Sound level

Sound level measurements during full load string test shall be taken at a distance of 1 meter from the equipment at the ear level, for operator standing at grade or on nearest platform. Positions shall be selected opposite all parts which appear to contribute most noise, i.e. piping at inlet to and discharge from machines, surfaces which radiate noise, valves, gear boxes, etc.

Measurements shall also be taken around the air intake filter (3 meters from it on a horizontal Plane) at the mean height of the filter and also around the exhaust stack (2 meters from it in a horizontal plane)

If noise level is found to be beyond the specified limits during the individual equipment testing, the string test at yard, or during the commissioning test at site, suitable measures shall be taken by the Vendor so as to meet the limits specified in specification for Equipment Noise limits i.e. Specification No. 5002 with no extra cost/time effect to the Company.

Acceptable sound pressure levels for each item of Equipment shall be in accordance with those specified in Specification for noise (Spec. No. 5002)

5.2 Process Gas Compressor Train Performance

The compressor shall be designed to deliver the rated head and rated capacity without negative tolerance. The BKW at the above condition shall be guaranteed with zero positive tolerance.

The following parameters shall be guaranteed by the Vendor. The guaranteed values with tolerance, if any, shall be indicated in the following format and included in the proposal:

Compressor`			
a)	• BKW required at Compressor input shaft at Rated Point (This is inclusive of margin permitted as per API 617)	:	KW +0 %
	• API 617 margin considered in above	:	%
b)	Mechanical & Seal Losses included in	:	KW

	(a) above		
c)	Gear Box losses	:	KW
d)	Compressor rated BKW (a+c)	:	KW
Gas Turbine		:	
a)	Heat rate at site maximum temperature while generating Compressor normal BKW including gear losses. (Kcal/KW-hr)	:	Kcal/KW-Hr + 0 %
b)	GGT inlet temperature at Guaranteed Site Rating under (c) below.	:	^{0}C
c)	Site Rating * (Note: Site rating is the max continuous rating of the gas turbine at site condition).	:	KW - 0%
	* Site rating shall correspond to following site/operating conditions.	:	
	i) Expected TBO (Hot Section)	:	
	ii) Expected TBO (Power turbine)	:	
	iii) GG rated speed	:	RPM
	iv)PT rated Speed	:	RPM
	v) Inlet loss at site Max. allowable is 100 mm of water	:	mm of water
	vi) Exhaust loss at site Max. allowable is 100 mm of water (Where no heat recovery is specified) Max. allowable is 250 mm of water (Where heat recovery is specified)	: :	mm of water
	vii)Site Max/Design temp.	:	^{0}C
	viii) GGT inlet temperature (Maximum permissible as per gas turbine design)	:	^{0}C
	ix) At ISO Conditions	:	
	• Rating (base continuous)	:	KW
	• GG Speed	:	RPM
	• PT Speed	:	RPM
	• GGT inlet temperature	:	^{0}C
Overall Compression Module		:	
	Noise Level	:	dBA

	Max. allowable is 88 dBA		
Guaranteed site rating for turbine shall be at least 105 % of the compressor guaranteed BKW at (d) above			

The Contractor shall guarantee the process performance of all the Equipment in each PGC Module.

For compressor, unless otherwise specified, the rated point shall be the guarantee point. Head and capacity shall have zero negative tolerance at the guaranteed point and the horsepower at this point shall be guaranteed with zero positive tolerance including instrument and measuring tolerances.

For turbines there shall be no negative tolerance on rated power and no positive tolerance on heat rate at site conditions.

Results of the shop performance tests shall be compared with the guaranteed performance data submitted by the Contractor in its proposal.

5.3 Compressor

Design requirements

The compressor shall be of proven design, used in similar operating conditions and shall be designed and manufactured in accordance with API-617 to perform the duty requirements and this specification.

The compressor casing design must exceed the maximum discharge and temperature capability of the compressor at the maximum continuous turbine speed and maximum suction pressure and temperature. The inlet and outlet nozzles shall exceed the casing design pressure and temperature limits.

All casing drain connections shall have valves and brought to a common header terminating with a valve so that the contractor shall make a single connection. This common header valve shall be brought to the skid edge and supported.

Casing materials and corrosion allowance shall be certified for the design life of compressor and NACE MR 0175. Compressor casing O-ring design shall be suitable for the maximum temperature.

Impellers, diaphragms and guide vanes shall be selected to optimize efficiency under the full range of operating conditions. Riveted impellers are not acceptable.

Vendor shall provide the thrust load calculation.

Spool piece with temporary strainer for ease of maintenance shall be provided. Temporary strainer shall be located on horizontal run of piping.

Bearings and Bearing Housing

Journal bearings shall be manufacturer's standard for continuous duty service. Thrust bearings shall be designed to withstand maximum thrust loads in either direction under transient conditions e.g. surge. Contractor shall submit rotor thrust balance calculation and associated specific thrust bearing loading. Thrust bearings shall be selected at no more than 50 percent of the bearing manufacturer's load rating.

Each radial bearings shall have atleast two RTDs within the expected load zone and two radial vibration displacement probes located at an angle of 90 degrees with each other. Each thrust bearing shall have four RTDs, two on active side and two on inactive side and shall be located in the highest loaded part of the pad. Also two axial position displacement probes shall be provided at each thrust bearing. Probes and their installation shall be as specified in API 670.

Shaft Seals

For shaft sealing refer section 5.6 of this specification.

5.3.1 **Compressor performance curves**

Compressor performance curves shall be supplied for the following:

i.) - Discharge Pressure vs. Inlet Capacity.
- Brake KW vs. Inlet capacity.
- Polytrophic Head vs. Inlet Capacity.
- Polytrophic Efficiency vs. Inlet Capacity.

Inlet capacity shall be indicated both in MMSCMD and AM^3/hr for all cases

ii.) The curves stated in (i) above shall be furnished for each compressor stage, combinations of 1st and 2nd stage combination of 1st, 2nd & 3rd stage etc.,.

iii.) Performance curves listed in i) and ii) above shall be furnished for the various combinations of suction conditions such as molecular weights, suction temperatures, and suction pressures.

iv.) Performance curves shall be drawn for 75%, 80%, 85%, 90%, 95%, 100% and 105% of the rated speed. Performance curve shall be indicated for minimum compressor speed also.

v.) Minimum and maximum discharge pressure points shall be marked on each overall performance map. In addition, limiting discharge pressure and temperature lines shall also be marked. Vendor will also include the limiting pressure capacity curve on each overall performance map based on the site rating of the gas turbine.

vi.) Expected surge line and surge control line (to be used for setting the instruments in the surge control loop) shall be shown on each performance curve.

5.3.2 Compressor Washing System

Vendor shall provide suitable washing system at each compressor stage Section. A common Compressor internal washing system shall be supplied. The Compressor cleaning System shall be capable of keeping the impellers free from all deposits considering the operation under offshore condition.

Washing System shall be suitable for use of water and/or any chemical recommended by the compressor manufacturer as the washing medium. The system shall incorporate suitable heating (one working + one standby heater) arrangement for the washing fluid with controls, and two pumps (one working + one standby) for pressurization. System P & ID and other details shall be approved by the Company.

5.4 Gas Turbine Driver

The gas turbine shall be designed and manufactured in accordance with API 616 and functional specification for Gas Turbine Drives 5501 F.

5.5 Couplings and Gear Boxes

Couplings shall be of the non-lubricated diaphragm/stainless steel flexible membrane type designed and manufactured in accordance with API Standard 671 with a minimum service factor of 1.75.

Coupling spacers shall be of sufficient length to enable removal of compressor, (and gearbox, if any) bearings and seals without disturbing any component of the drive train. Couplings and spacers will be dynamically balanced independent of the rotating assemblies. Dynamic balancing of the rotor with coupling hub will be required after each component has been individually balanced as per API 671 method 2. Residual unbalance check of assembled coupling and balance repeatability shall also be carried out.

Installation and removal of coupling hubs shall be by means of hydraulic expansion or as per OEM standard procedure. Contractor shall furnish the hydraulic coupling auxiliary equipment, such as pump, connectors and fittings. Vendor shall keep a matched set of plug and ring gauges for each tapered bore and provide to company as and when required.

Coupling guards shall be constructed from non-sparking materials such as brass or equal. Aluminium is not permitted for guards. The guard shall be sufficiently rigid to withstand deflections as a result of bodily contact of nominally 100kg.

Gearboxes, if required, may be parallel shaft type with single gears or epicyclic design. Either type gearbox shall utilize tilting pad type thrust and journal bearings.

The nominal rating of the gearbox will be determined by the total turbine power output while operating at its maximum firing temperature with the minimum site temperature. The rated power capacity of gearboxes shall be equal to, or greater than 100% of the driver independent ISO rating. Gearboxes shall be designed in accordance with API Std. 613. The minimum design service factor used shall be 1.6. Gearboxes shall have a maximum momentary over-speed ability of at least 120% of the rated speed.

Inspection of the gears and bearing shall be possible without removal of major components or equipment.

For the coupling between Gear Box and Gas Turbine, drawing and data duly approved by the Vendor shall be reviewed by the turbine manufacturer prior to submission to the Company for approval.

5.6 Lube Oil System

The lubrication oil system for turbine, gearbox and compressor shall be designed and manufactured in accordance with API 614 and as specified herein.

Lube oil system shall be preferably common for gas turbine, compressor and gear box (if provided).

The lubricating oil system shall be provided complete with one duplex filter with a changeover valve that allows 100% continuous flow during normal and change of filter operations. The filters shall be capable of removing 95 percent of particles 10 microns and larger. Pressure drop in clean filter shall not exceed 0.35 kg/cm2 at normal operating temperature and flow.

All pumps, piping, valves, fittings, drains, control valves, vents, cooling, instrumentation and/or controls for the PGC train lube oil system shall be supplied. A common lube oil system for the turbine, gearbox (if any) and compressor is preferred, however separate reservoir, pumps, filters, controls, etc. shall be provided where synthetic lube oil is to be used for the turbine.

The lube oil system shall be equipped with AC motor/ Gas Turbine driven main oil pumps capable of meeting 100% of the system oil circulation requirements. Auxiliary Lube oil pump is AC motor driven and the capacity of the pump shall fulfill the requirement of all equipment (as defined by individual OEM). In addition the lube oil system shall be provided with a DC motor driven emergency oil pump designed to protect the Compressor, gearbox & turbine bearings during coast down after emergency/ power shutdown. However in case of failure of auxiliary AC lube oil pump during normal shutdown/trip of the train, DC pump shall also start.

Run down tank, if required shall be provided by the vendor.

All lube oil piping, and related accessories shall be manufactured from 316L S.S materials. Also, valve trims shall preferably of SS 316L. The oil reservoir tanks shall be manufactured from 316L S.S or CS with proven internal coating like Brayco 785. The lubricating oil reservoir shall be contained within the compressor or turbine base plate.

Reservoir shall have access opening for cleaning with valve drain connection. Fill connection shall be raised above tank top and be fitted with 100 mesh (SS 316L) screen. If necessary, for easy starting, a lube oil heater shall be provided, interlocked with a low oil level switch and thermostat.

Lube oil vents shall be supplied and routed to high safe areas (preferably up the turbine enclosure exhaust stack), outside enclosures.

All compressor and turbine lube-oil vents shall be fitted with oil coalescers and flame arresters. The coalescers shall eliminate 100% of all oil particles greater than 3 microns in diameter and at least 99% of all particles 3 micron or less in diameter. Oil return lines with sight glasses to reservoirs shall be provided.

One trolley mounted pump (common for all modules) with necessary hose piping, valves, connections etc. shall be provided for emptying out/filling the main oil reservoirs. Pump capacity shall be 3 M3/hr (minimum) and it shall be electric motor driven. Proper parking space shall be fixed for the trolley in each module. The trolley shall be complete with explosion proof motor starter, flexible cable and explosion proof plug. An explosion proof socket to suit the plug shall be provided near the reservoir. The trolley shall be suitable for use in a class 1, Division1, Group D, T3 hazardous area.

One trolley mounted portable oil centrifuge with necessary valves, fittings, connections, hose piping, cabling, etc. of required length shall be supplied. The capacity shall be sufficient for total oil treatment (of 1 train) in approximately 12 hours.

5.6.1 Oil Coolers

Lube coolers shall be air cooled, finned tube and header type and shall be designed, manufactured and supplied according to the requirements API 614 and the Functional specification for Air Cooled Heat Exchangers 5701F.

Tube material for oil coolers shall be Stainless steel 316L.

The oil cooler shall be equipped with temperature-controlled bypass valves and sized for a minimum temperature approach of 14 deg. C to the maximum ambient air temperature as indicated else where in the bid document.

The fans of oil coolers shall operate with sparing philosophy i.e. one working and one standby (1+1). Cooling area shall be 200 % of the required surface area.

ASME Code stamp is required on all coolers.

Equipment furnished for Air-cooled exchangers shall include, but not limited to:

- Coolers with fans and guards, electrical motor drivers and gear-reducer (minimum service factor 2 as per AGMA).
- Vibration cutout switches.
- Access platform and ladders.

Fans shall be fitted with vibration monitoring accelerometers which shall be cabled down to a readily accessible junction box to enable connection of vibration measuring equipment. Contractor shall connect the same to the Vibration monitoring system with the vendor supplied cables / vendor specified cables.

Access ways, platform and ladders shall be provided to enable operational and maintenance activities to be carried out safely. Particular consideration shall be given to provide permanent access to permit the rodding of tubes (from either end), accessing motor drives, gear drives, fan bearings, upper fan enclosure, fan hubs , instruments etc .

Size and thickness of tubes, maximum number of fins per inch shall be as per relevant applicable functional specification and API code.

Motors shall be in accordance with functional specification of electrical motors, suitable for area classification.

Provisions shall be made in the Cooler design to facilitate ease of cleaning of the cooler.

The orientation of the oil coolers shall be horizontal with forced draft air flow in upwards direction.

5.7 Dry Gas Seal

Contractor to demonstrate performance of dry gas seals in similar operation and condition. Contractor shall establish that seal gas meets the seal manufacturer's quality requirements.

Dry Gas seals shall be uni-directional dry gas seals in tandem arrangement. In case of sour gas, tandem seal with intermediate labyrinth shall be provided. A common seal gas control system shall be provided for each train. This system shall continuously monitor for seal leakage and initiate appropriate alarms and/or shutdowns. The system shall include high and low flow alarms. PGC train Shutdown shall be executed on detection of excessive pressure downstream of the seals.

Seal Gas flow shall be controlled using a restriction orifice/needle valves. Gas Filters shall be provided and Contractor shall ensure that the seal gas at the outlet of each seal is dry. Each filter shall be provided with a differential pressure gauge or a high differential pressure transmitter and alarm for signaling the need to change filter elements.

The Contractor shall confirm whether external seal gas supply is necessary during start up. Provision of external seal gas system shall be included in the scope of Contractor.

The contractor shall confirm and prove that there will be no possibility of liquid drop out in the seal cavity, due to Joule –Thomson effect,(when the gas expands across the seal faces), during all operating conditions including ' start up'(when gas is expected to be cold) and 'shut down'. Any mitigation requirements for this are to be included in Contractors scope.

The contractor shall provide with its bid the following design data:

- Primary seal gas maximum/minimum/Normal flows and respective temperatures
- Maximum allowable primary vent back pressure
- Maximum depressurizing rates
- Expected and guaranteed primary and secondary seal leakage rates for pressurized stop (static) and maximum / Normal operational speeds (dynamic)

- Expected and guaranteed consumption of buffer gas and ~~or~~ separation gas.

Dry gas seal panel shall be complete with filters, regulators, and instruments as required for monitoring and control. Standard gas conditioning unit (GCU) from the dry gas seal manufacturer shall be preferred. However, the reliability of GCU offered by compressor vendor and the GCU offered by Dry gas seal manufacturer shall be compared and the most reliable option shall be adopted. A GCU functionality test shall also be done.

Dry gas seal scheme / P & ID shall have approval from dry gas seal manufacturer.

Contractor shall evaluate and provide full details regarding whether a buffer gas arrangement is required and if any means are required to prevent condensation.

Based on the buffer/ separation gas requirement, Vendors/Contractor shall provide dedicated N_2 generation systems if not specified elsewhere, common for all the compressors and sized for running all the compressors (working+ standby) together at a time. The quality of nitrogen shall meet the requirement of dry gas seal manufacturer. 100% availability of nitrogen shall be ensured for the compressors.

If instrument air is required as separation gas for gas seals, the same shall be arranged by the contractor if not specified elsewhere for all the PGC module and sized for running all the compressors (working+ standby) together at a time.
Instrument air for turbine coasting, if required shall be considered during design calculation of Instrument air capacity.

5.8 Gas coolers and KOD's

5.8.1 Gas KODs

Gas Knock out drums shall be designed, fabricated, tested and ASME code stamped in accordance with ASME VIII, DIV 1 and functional specification for unfired pressure vessel 5601 and process parameters as per process design criteria. The knock out drum shall be designed to separate the entrained liquid from the gas stream.

The vessel shall be designed such that they are suitable for all the process conditions specified. Vendor shall provide adequate liquid hold up between high level shut down and low level shut down for taking corrective action in the event of closure of liquid outlet shut down valve to avoid nuisance shut down of compressor.

Vendor shall submit design calculations, filled in data sheets and fabrication drawings for K.O. drums for review/ approval of the company, before taking up the fabrication work.

5.8.2 Gas Discharge Coolers

Gas discharge coolers shall be air-fin type air cooled heat exchanger(s). These coolers shall be manufactured and supplied according to the requirements API 661 and the Functional specification for Air Cooled Heat Exchangers 5701F.

The Gas coolers shall be designed for cooling discharge gas from the compressor for approach temperature as specified in process design criteria elsewhere, for all the operating conditions of the compressor.

Coolers shall be air-cooled, finned tube and header type, and designed as per the Functional specification for air cooled heat exchanger 5701F which is attached elsewhere in the bid**.**

These gas coolers shall be designed based on at least 110% of flow and 110 % of heat duty and allowable pressure drop corresponds to 110% of flow.

ASME Code stamp is required on all coolers.

Equipment furnished for Air-cooled exchangers shall include, but not limited to:

- Coolers with fans and guards, electrical motor drivers and gear-reducer (minimum service factor 2 as per AGMA).
- Vibration cutout switches.
- Automatic control of gas temperature shall be achieved by using variable speed drive (VSD) motor (controlled by temperature control system).

- Access ways, platform and ladders.

Fans shall be fitted with vibration monitoring accelerometers which shall be cabled down to a readily accessible junction box to enable connection of vibration measuring equipment.

Access ways, platform and ladders shall be provided to enable operational and maintenance activities to be carried out safely. Particular consideration shall be given to provide permanent access to permit the rodding of tubes (fro either end), accessing motor drives, gear drives, fan bearings, upper fan enclosure, fan hubs, instruments etc.

Size and thickness of tubes, maximum number of fins per inch shall be as per relevant applicable functional specification and API code. The material of construction, corrosion allowance, etc. shall be as specified in the codes / applicable specifications. In case of sour gas applications, all the requirements of NACE shall be met.

Motors shall be in accordance with functional specification of electrical motors, suitable for area classification.

The orientation of the oil coolers shall be horizontal with forced draft air flow in upwards direction.

Clear space under the cooler (free of piping) shall be provided for maintenance and removal of Gear-box etc.

5.9 Acoustic Enclosure and Ventilation

The gas turbine driver (and gearbox if necessary) shall be enclosed in a weather proof, sound proof attenuating housing as described in Functional specification for Gas Turbines 5501F. The enclosure shall be designed to reduce sound pressure level to, or below, the specified noise level limits.

Details of the Turbine enclosure fan capacity and ducting arrangement, enclosure temperature and required number of air changes shall be provided.

5.10 Module Shelter

Vendor shall provide an all weather shelter over the turbine enclosure and compressor unit to provide environmental protection around the unit for the operators and maintenance personnel especially during heavy monsoon season. Shelter shall extend beyond the edge of the main turbine and compressor unit for enough width to provide easy access around the unit for inspection maintenance and shall consist of sheeting on all sides of shelter except where the material and equipment handling facility will require opening. Coolers shall be located above/outside the shelter.

Shelter shall be fitted with two Nos. (1 working + 1 stand by) electric motor driven fans designed to preclude build-up of a hazardous atmosphere, and require minimum of 12 complete air changes per hour within the shelter. Vendor shall provide the necessary ventilation system in the shelter to remove the heat and ensure an adequate supply and distribution of outside air throughout the shelter. Adequate removal and maintenance provision shall be provided for the fan and motor.

Within each module shelter, the Vendor shall furnish traveling bridge crane(s) of suitable capacity so as to provide means of dismantling the gear boxes, compressors and other auxiliary components. Travelling bridge crane shall have all electrical operations with provision of inching speed in lifting operations. It shall able to transport the equipment up to module maintenance area. In addition, suitable monorail with all electrical operations shall be provided for maintenance of gas generator and power turbine and also for transportation of gas generator/power turbine from the enclosure to maintenance areas on the module skid.

In addition, suitable monorail /other system shall be furnished for the maintenance of GT starting motors and other module systems/components which require maintenance. For transportation of equipments from module maintenance areas of each module, electric lifting/travel arrangement shall be provided for transportation up to a common area at the battery limit of the module from where the contractor shall provide facilities for Transportation to deck Loading/unloading areas.

A list of all such systems/components which require maintenance shall be furnished along with maintenance facilities included for approval by the Company.

The bridge cranes shall be with non-sparking materials for wheels and one of the rubbing parts for non-enclosed parts.

Vendor shall submit, a complete description of the shelter.

5.10.1 Shelter and skid Structure

The shelter frame shall consist of structural steel and/or framed steel members connected together to form a self supporting rigid frame mounted on the skid of the module adequately designed to withstand all applicable loads as set forth in structural design criteria.

Provision shall be kept in the design to laterally support the pedestal crane from the shelter structure.

A wind velocity of 213 kmph (at 10m above chart datum) shall be used for calculating wind forces with due consideration to the variation of wind with height as given in API-RP-2A.

Structural steel for fabrication and installation of structure shall conform to General Specification for material (spec No. 6001F) specified in the bid.

The shelter shall be fabricated to comply with functional Specification for Welding and NDT Spec. no.2009 F

Shelter shall be formed as per Functional specification for Building Module (spec No. 6011F) & Architectural Design Criteria for process platform.

All exposed structural steel shall be coated in accordance with Specification "Protective Coating" specification No. 2005 unless Manufacturer's standard coating is superior.

5.10.1.1 Roof and Walls

The building shall be properly enclosed with steel wall and roof, joints and openings shall be sealed against penetration and to reduce thermal conductivity

The building materials and construction shall confirm to the requirements of the NFPA “National Codes”.

a) External walls & roof shall be made up of 6 mm thick plate, suitably reinforced and painted. The roof should have minimum slope of 1:50.

b) Steel metal for flashing and other closures shall be 14-gauge steel. Interior wall liner and interior partition shall be of non-combustible materials. All closures in walls and roofs shall form a non-combustible watertight seal around service lines electrical cables, etc. Use of multicable transits or other UL approved fire stop methods shall be considered for all cables entering or leaving the building.

c) Finish: All surface finish marks and scratches shall be touched upto match the original coating.

5.10.2 Module Skid

The base plates of turbine-compressor, vessels, coolers and other auxiliary system shall be installed on a fabricated steel skid.

The skid of the whole module shall form structural steel floor deck and shall be designed to rest directly on the platform deck girders.

The skid shall be suitably sealed against rain water going down to lower decks of platform and shall have adequately designed drainage system consisting of drain headers for individual equipment/base plate which will be further connected to module skid drainage header. This header will be flanged and terminated downward at module lower deck beams.

Vendor shall provide the necessary leveling devices and equipment required to make the compression system operable. Vendor shall coordinate the design of the skid and the leveling system with the platform fabrication/installation contractor to simplify installation offshore and minimize the time required to prepare the compression system for operation after the skid has been installed.

A clear grated walkway of adequate width allowing free movement of hydraulic maintenance lift of suitable capacity shall be provided around all the compressor modules. These walkways shall be integrated with the deck walkways.

Clearance between compressor modules shall be at least 1000 mm (min.) for walkway.

5.10.3 Shelter Lighting

The lighting system of the compressor module shall be designed in accordance with Electrical design criteria enclosed in the bid.

Socket outlets shall be provided within the module area as defined in electrical design criteria.

5.11 Materials

Materials of construction shall be selected to suit the fluid medium with which it is in contact and shall be suitable for offshore service. The Contractor shall identify each component part and the proposed material, including minimum corrosion allowances, etc.

Material of construction shall be subject to company's review and approval. Corrosion allowance for carbon steel parts shall be 3mm minimum.

All materials shall be new, unused and in accordance with the manufacturing requirements of API RP14E. Actual ASTM numbers and grades for all materials shall be specified on Contractor's data sheets.

Materials exposed to process and fuel gas are to be considered sour (wet H_2S) as defined by NACE MR-0175 and shall conform to the requirements of that standard.

No asbestos or asbestos based products shall be used.

5.12 Welding

All welding shall be the responsibility of the Contractor and shall be in accordance with the appropriate Codes and Specifications as follows:

- Piping ASME B31.3 and ASME section IX
- Packaged equipment/Exchangers ASME VIII DIV 1 and ASME IX
- American Welding Society Code or equivalent standard
- Functional specification for Welding and NDT(Spec.2009F)

Each weld procedure shall be covered by a suitable procedure qualification tested in accordance with the requirements of ASME Section IX.

Weld repairs shall not be carried out on Compressor casings or other pressure retaining components without prior Company approval.

5.13 Piping

All Inlet and Outlet piping shall terminate at the Module/Package edge with an appropriately rated flange and Tie in pipe support.

All piping shall be in accordance with the following Functional specifications for design, material, fabrication and installation:

- Piping Design Criteria
- Functional specification for piping design -2004A
- Functional specification for piping fabrication and installation - 2004B

However, vendor specification may be considered for piping within the skid.

Piping or tubing of insufficient mechanical strength for standing on or hanging from shall be protected from personnel traffic. All piping and tubing shall be adequately supported.

Valves shall be installed as necessary to bypass and allow removal of duplicated components for maintenance without shutting down or draining the complete system.

Equipment shall be oriented within the Package/Module to allow as much space as possible between pieces of equipment to facilitate maintenance. Adequate space shall be allowed for access to and maintenance of package/module components without removing any major assembly.

The pipe stress analysis shall be carried out for piping within the PGC train /module, utilizing proven software package. The Contractor shall be responsible for meeting flexibility criteria specified in ANSI B31.3 and design of pipe supports. Contractor shall also be responsible for co-ordination with vessel/exchanger sub-contractors, to ensure that local stresses at nozzle junctions are within code acceptable limits. The Contractor shall furnish proposed Pipe Stress Analysis Program. The Contractor shall submit pipe stress analysis calculations and report for the Company's approval.

5.14 Electrical

Electrical work and equipment shall conform to the requirements of electrical Design Criteria and functional specification for Electrical Equipment of Packaged Plant FS 4017.

Electric motors shall be totally enclosed fan cooled and be in accordance with respective Electric Motor specification. Contractor shall submit completed copies of the Data Sheets for the motors supplied under this contract and advise power requirements of each electric motor by KW and Ampere rating.

Pump drive motors shall have power ratings at least equal to 110% of the maximum pump power rating.

AC and DC Electrical motor starters will be furnished by the Contractor and mounted in the Switchgear Room. Control switches for each motor control shall be designed and provided by the Contractor.

The Contractor shall supply a battery and charger system(s) to meet the DC requirements of the PGC module including the turbine and compressors. The batteries will be located remotely in the Battery room.

Motor cable boxes and connection junction boxes are required and shall be located such that they are accessible from the package /compressor train skid edge.

All electrical cable trays shall be of fiber glass material.

A local control station shall be provided within 3 meters of each motor other than starter motor and lube oil pump motor.

Three phase 4 wire receptacles with plugs shall be provided at suitable locations to facilitate maintenance work, such that any point on the skid can be reached using a 15m connection cord and also near all equipments for which local starters are provided.

All A.C. Motors shall be suitable for open valve/damper starting of Pumps/Fans respectively.

5.15 Instrumentation and Controls

5.15.1 **General**

The term Instrumentation shall mean Instruments, Control system & safety instrumented system along with the applicable utilities, hook-up materials related to process gas compressor (PGC) package/train. Instrumentation shall primarily be designed as per the requirements of API-Standard-616, and API-Standard-617.

The purpose of Instrumentation is to implement controls, sequencing, optimization, safety instrumented functions for entire package/ compressor Train inclusive of PGC, Gas Turbine Driver, related auxiliaries & accessories.

The Contractor shall provide comprehensive Instrumentation system which shall provide for smooth, safe and reliable start up, operation, monitoring, optimization of the package/train, warn of abnormal conditions, and provide for shutdown of the package/train under all normal and abnormal operating conditions.

Each PGC equipment package/train shall be provided with dedicated Instrumentation and shall be based on Programmable Logic Controller (PLC). As this PLC shall implement all starting/ normal operation/ control/ optimizing/ controls, (safety) shutdown, sequencing it shall be certified SIL 2 as minimum to IEC standard 61508/61511.

Instrumentation system for each PGC equipment module shall be inclusive of but not limited to the following components:

1. Field instrumentation and local control panels.
2. Control, monitoring and safety instrumented system. (LCP, LGBs, UCP near PGC, RCP in CCR, ASC system, ASC valves, Master / performance controllers and Load sharing controllers).
3. Interface / Integration with the other Instrumentation systems of the platform i.e., platform ESD/FSD/DCS.
4. Miscellaneous items inclusive of cables, JB's, tubing, installation materials, proprietary cables and connectors, cable trays, Hook-up materials etc.

Instrumentation shall basically be designed as per the technical requirements as indicated in Basic bid work- Instrumentation, Vol-II of the bid package.

Support for Instrument and Control systems required is for at least 7 years after the end of the warranty period. The Contractor shall advise details of commitment by Contractors for control system and software support.

5.15.2 Field Instrumentation

Field instrumentation shall be inclusive of gauges, transmitters, switches, analyzers & analyzer systems, fire/ thermal/ gas detectors, final control elements like control valves / shutdown valves, pressure relieving devices like safety valves/ blow down valves/relief valves/ safety relief valves/ thermal relief valves, specialized machine monitoring sensors, local ESD / FSD push buttons, etc.

Except for local-field mounted gauges & pressure relieving devices, all field instruments shall be connected suitably to integrated control/ safety instrumented system of the package/module to meet the functional requirements of this specification.

5.15.3 Integrated Control/ Safety Instrumented System

Each PGC train shall be provided with its dedicated UCP for control and safety instrumented system. This dedicated control/ safety instrumented system shall be Programmable Logic Controller (PLC) based.

Start-up and Shutdown sequencing / interlocks- Functional requirements

Instrumentation for each package/train shall be designed for both Local as well as Remote (Control Room) start-up and shutdown.

Instrumentation shall be designed for fully automatic start, shutdown & normal operation of the package/train. Fully automatic start operation shall be effected by means of one push-buttons actions as described below:

- On pressing the button the system shall sequentially commission the auxiliaries, purge / warm-up/ prepare the package/train and driven equipment for starting sequence. Completion of these activities will initiate the complete starting sequence.

- The desired operation shall require no further operator action during any system pressurization and bringing the Equipment train up to full load.

The start-up logic shall ensure that all permissive-to-start signals are satisfied inclusive of external process / utility permissive-to-start signals before the commencement of starting logic sequencing.

Following minimum shutdown provisions shall be provided for each package:

- Remote shutdown signal from platform ESD PLC system
- Stop push button at all package/train control panels
- Emergency stop button near turbine enclosure
- Package/Train safety interlocks
- Watchdog timer

On initiation of shutdown signal package/train shall be brought safely to stop with all valves in failsafe mode. “Crash stops” shall be designed to stop the Train in the shortest possible time without jeopardizing safety.

The vendor/ contractor shall be responsible for developing all logics for the package/module and shall be inclusive of start, normal operation, shutdown logics/ sequencing. Shutdown sequence logic shall include all shutdown scenarios, viz., normal controlled shutdown, emergency shutdown. All these logics shall be included in the proposal for review by the company.

The main components of the Compressor Control / Safety Instrumented System shall be:

- Unit Control Panel
- Local Control Panel
- Local Gauge Board Panel/ Local Oil system gauge board panel or HMI screen
- Anti-Surge control system
- Load sharing control system with main performance controller (Master suction pressure controller) and load sharing controllers
- Machine protection / Monitoring system
- Remote control panel in CCR if required as per Bid scope (refer clause 5.15.3.1 for further details)

5.15.3.1 **Unit Control Panel (UCP)**

UCP shall be PLC based and shall be housed in Control Room (or in the building module i.e. near switchgear room) which is a safe area. UCP shall be primarily in a room near the PGC module/package on platform. It shall be placed in the CCR if PGC module and CCR are on the same platform. Where the CCR is on another platform (i.e. LQ etc.), then the RCP shall be provided in the CCR (located in LQ) to duplicate the functionality of the UCP. It shall be possible to monitor and control/operate the Compressors (with and without load sharing) through the HMI of the RCP. UCP shall implement package/train related start / normal operation / control / optimizing / (safety) shutdown sequencing functions.

The UCP shall provide extensive self-diagnostics, including detection of out-of-range trip and alarm conditions on analogue inputs. Where an input is used for shutdown, detection of an out-of-range condition shall initiate a shutdown. The UCP shall also cross-check between signals from field devices in identical services and alarm any abnormal difference.

UCP shall include / meet the following requirements:

- Main PLC shall be provided as per the requirements as indicated in Functional specification for Programmable logic controller, Spec no. C101 attached elsewhere in the bid package. PLC shall implement all the necessary interlocks related to package/train operation, start, stop, sequencing & safety.

- Machine Protection / monitoring system inclusive of vibration, axial & temperature monitoring system etc.

- Other controllers required for the functioning of the package/train

- Fire & Gas detection system cards, provision of interfacing with Fire suppression system/ other platform system as indicated elsewhere in the bid package

- High-integrity back-up shutdown system, with hard-wired interfaces to the platform ESD and Fire & Gas system

- Load sharing control system, Anti-Surge control system.

- Real time displays shall allow monitoring of compressor unit operating point with respect to surge line, monitoring of all auxiliaries, monitoring of vibration, Performance (Efficiency) of turbine and compressors.

- Operator interface shall be through 18/15 inch LCD/ TFT based monitor with touch screen facility & keyboard/ mouse for monitoring and control of the package/train. Operator interface shall have all the necessary graphics to supervise package/train operation. It shall also implement/ have comprehensive Alarm & Events logging/ events management system for the package/train, hardwired switches, push-buttons and indicators for critical functions inclusive of start-up, shutdown, mode selection, general and critical common alarms, etc.

- Condition monitors shall store package/train equipment status and allow the history of the machines to be viewed for diagnostics, particularly after a trip.

- Alarm annunciation shall be first-out type and shall follow F3A sequence of ISA-S-18.1.

- Test bypasses to allow on-line testing of protective functions

When required, the protective system shall stop the turbine, isolate the package/train from the process and from fuel gas, and blow down the package/train hydrocarbon inventory, including fuel gas. Blow down shall be directly initiated by the system and shall be independent of the process isolation valve position signals. The protective system shall be completely independent of the process monitoring and control system.

Contractor shall provide a laptop PC for programming and maintenance of UCP/ LCP, complete with all required software, hardware and all accessories inclusive of cables, adapters, carrying case, etc to permit up-loading and down-loading of data and programs to the UCP/ LCP. Contractor shall supply two copies on CD of complete system software at FAT and at the conclusion of site acceptance test. Laptop shall be of ultra-light weight, and be provided with at-least Pentium-IV / or latest Intel microprocessor, OS-Windows XP Professional latest version, 15 inch

monitor, CD combo drive. All software shall be provided with evergreen licenses.

5.15.3.2 **Local Control Panel**

Local Control Panel shall only have provisions for initiating start & stop sequencing in conjunction with UCP.

Local control panel shall include the following facilities:

- Indicators: Minimum indicators shall be provided for- Ready, Preparation Start in Progress, Lube Oil Established, Preparation Start Complete, Engine Start Progress, Gas Fuel On, Power Turbine Running, Gas Producer above Idling, All Auxiliaries Healthy, Control Mode Local/ Remote.

- Push buttons: Minimum push buttons shall be provided for- Acknowledge, Reset, Lamp Test, Start, Normal Stop, Emergency Shutdown.

- Selector switches: Minimum Selector switches shall be provided for Test Crank On / Off, NGP Decrease / Increase.

- LCD/TFT monitor: It shall be possible to view current alarms & events on the monitor. Other displays like machine overview, auxiliary status, etc. Displays shall be selectable by scroll push button mounted on the local control panel

5.15.3.3 **Local Gauge Board Panel/ Local Oil system gauge board panel**

Separate local gauge board panel shall be provided for Oil system and driven system. Gauges of all the necessary process equipment parameters shall be installed in the respective panels.

5.15.3.4 **Anti-Surge Control system**

Each PGC train shall be provided with dedicated anti surge control and recycle control systems including control and re-circulation valves. Surge control system shall be provided for every compression cycle (stage) of the PGC train.

The purpose of Surge control system shall be to provide automatic means to prevent the machine in going near to & operate on/ or beyond machine surge limits. Surge control system shall be microprocessor based. All the controllers shall have necessary digital displays and keyboard for monitoring operation and data entry. The control scheme for surge control shall be developed jointly by the compressor package/train vendor and the suppliers of the controllers. Specifications for field instruments related to surge control system shall be developed by the compressor package/train vendor and same shall be approved by surge control system supplier.

Vendor shall ensure that there is no hydrate formation, hydrocarbon condensation or water condensation in the recycle line control valves. Details of the method adopted shall be submitted to the Company for approval.

All controllers of surge & load sharing control system shall meet the following requirements also:

- Controllers shall allow entering of functions and tuning parameters at data entry board of the controllers
- The system shall be capable of detecting/ alarming failures of power to a loop, an open circuit and a malfunction in the field transmitter itself. The system shall be intrinsically safe.

A dynamic simulation test shall be carried out to prove that the configured surge system will perform computations and control strategies correctly. The tests shall also include checking of system wiring, communications (within the controller, controller to controller and controller to UCP) and system self diagnostic capabilities.

Surge control system shall have the following dedicated components:

- Anti Surge controller (ASC): The functionality of the ASC may be implemented as:
  a) in the UCP PLC with proven track record, or
  b) as a standalone unit with its dedicated controller hardware with proven track record.
- Emergency anti surge controller (EAS): EAS control system shall be a standalone unit with its dedicated controller hardware, suitably interfaced with the ASC. The EAS controller shall be with dedicated field transmitters, independent of the ASC / process field transmitters.

- Field instruments, inclusive of transmitters, recycle control valve used for the anti surge control system.

Surge controller

Controller shall allow compressor to operate as close as possible to the Surge line (@ 2% away from actual surge line) safely.

It shall provide stable operation. It shall be able to operate recycle (surge) control valve accurately without hunting.

It shall be capable of preventing the compressor to surge even during upset conditions. This shall be achieved by fast response transmitters and bypass valve as well as by special algorithms in soft ware.

Auto / manual selection, inputs for bias and other settings as required for adjusting the surge control / safety line shall be provided.

A trip control algorithm as an overshoot limit control shall be provided. This feature will quickly open the recycle valve to a preset position, upon an external trip signal from the compressor shutdown system (or from other status signals indicative of a sudden reduction in flow rate).

Manual operation of recycle valve shall have override by surge controller.

Controller shall be capable of checking the input signal failure and taking action for safe operation with necessary indication on the panel.

Controller shall have necessary software for protecting the machine due to interaction among multiple stages of a compressor.

Controller shall have the capability of calculating necessary parameter for achieving load sharing control among parallel compressor operation.

Controller shall have necessary hardware and software for communicating to other surge controllers, Load sharing controllers etc so as to achieve the intended function (load sharing mode of operation).

Emergency surge detector/ controller

Emergency surge detector/ controller shall be provided as backup to the Surge controller. In the event of failure of surge controller/ system, this detector/ controller shall prevent machine damage due to surge by opening the recycle valve very fast on sensing the second surge cycle. This shall be independent of the main anti-surge controller.

Field instruments, inclusive of transmitters, recycle control valve

All field instruments concerning surge control system shall meet the response time requirements of various controllers in surge control system. All surge control system related field instruments, inclusive of transmitters & recycle valves, data sheet shall be vetted by surge control system supplier / vendor.

The recycle valve shall be fully modulating type with tight shut off and shall have balanced plug design. Valve shall be capable of stroking from fully closed to fully open in less than 3 seconds. The valve actuator shall be provided with a positioner that integrates current-pneumatic conversion, positioner action and electrical feedback signal proportional to valve position. The feedback electrical signal shall be used to display the valve position for valves on UCP.

The recycle system shall be suitable for running the compressor train in a normal manner for extended periods, should the feed stream drop below compressor surge capacity for all possible causes of operation based on suction conditions. Continuous recycle operation may be expected during the operation.

A temporary stainless steel conical strainer of adequate strength shall be installed during commissioning in the compressor suction line upstream of performance pressure sensor. This strainer has to be mounted into a drop-out pipe spool.

5.15.3.5 **Load sharing control system (including master controllers)**

Where load sharing between 2 or more compressor trains is specified, the load sharing controller system shall be a standalone unit (independent of UCP-PLC), with dedicated controller hardware and with proven track record. Load sharing control system shall be provided for operating parallel compressor trains in load sharing mode. Load sharing control system in conjunction with surge control system shall ensure smooth automatic

running operation of compressors in parallel, surge protection of compressors, & maximizing process efficiency. To achieve this Load sharing control system shall be suitably interfaced with surge control system of the compressors.

Load sharing control system shall have following components:

Main Performance controller

For all the compressor trains one number of main performance controller shall be provided. This main performance controller shall be suitably interfaced with slave load-sharing controllers. One number Load sharing controller shall be provided for each compressor train. Complete load sharing control scheme shall be based on common suction pressure control.

Load Sharing Controller

Load sharing controllers shall be provided for each compressor train. Load sharing controller & main performance controller shall work in supervisory control mode to control throughput of each compressor. Each load-sharing controller shall be suitably interfaced with the respective compressor train surge control system in order to achieve smooth parallel running operation in parallel mode.

5.15.3.6 **Machine protection/ monitoring system**

Machine protection / monitoring system shall comply with the requirements of API 670, API 613, API 616 & API 617 standards. Also refer Annexure-I of this specification for specific requirements of machine protection / monitoring system. Machine protection/monitoring system shall have proven track record and latest configuration. Machine protection/ monitoring system shall be inclusive of field sensors, signal conditioner and monitor system.

Machine protection/ monitoring system of all the trains of gas turbine compressors shall be interfaced to a Supervisory computer system for operator monitoring purpose and shall provides all displays, viz., real time machine graphics, real time machine variables trending, steady state and transient state dynamic data response monitoring, machine protection/ monitoring system diagnostics display. Supervisory computer system shall allow the automating of predictive maintenance and diagnostic messaging for maintaining gas turbine and compressors. All necessary as well as

optional software packages shall be provided for meeting the functional requirements as stated above and implementing the same in supervisory computer server/ workstation.

Each train shall have monitor rack with back plane electronics and communication processor along with interconnecting cables. All the communication processors of each train shall be connected to the Supervisory computer system and Laser-jet printer. Supervisory Computer server/ workstation as minimum shall have Intel Xeon, 2.0 Ghz or equivalent processor, 4 GB RAM, HDD, arranged in RAID 5 configuration (separate RAID controller card shall be provided), CD-RW drive, keyboard, mouse, 21" TFT LCD video display unit. All necessary software inclusive of Operating system/ Drivers/ etc shall be provided along with the system.

5.15.4 Integration with the other Instrumentation systems of the platform

Operation monitoring of PGC module/train shall be from Process control & monitoring system of the platform. Also, to meet the safety requirements of the entire platform, PGC module/train shall be suitably interfaced with the platform ESD system and Fire & Gas detection system. In order to meet the above-mentioned requirements, following integration of PGC module/train "Integrated control /safety instrumented system" with the platform systems are envisaged:

- Serial monitoring interface with platform process and control system,
- Hardwired interfaces with platform ESD PLC system
- Hardwired interfaces with platform Fire & Gas detection system
- All interfaces related to module/train shutdown shall be hardwired interfaces only

5.15.5 Miscellaneous items inclusive of Hook-up materials

All the installation, hook-up, testing, pre-commissioning, etc related to Instrumentation activities as indicated in Cl. No. 5.16 of this spec shall be in contractor's/ vendor's scope. Following minimum requirements shall be met:

- Scope shall be inclusive of Junction boxes, tubing/ piping, tube trays, fittings/ miniature valves/ manifolds, interconnecting cables, cable glands, plugs, cable trays, supports, MCT, etc.

- Junction boxes for cabling to control room panels/ cabinets shall be mounted at package/train skid edge and shall facilitate ease in operation & maintenance operations.

- Detailed package/module layout coordination is required such that the final package/module layout allows satisfactory access for the maintenance and inspection of all instruments and controls.

- All instrumentation and controls shall be suitable for the cabling distances required.

5.16 Fire And Gas Detection And Suppression

The overall gas and fire detection along with fire suppression system for the full area covered by the equipment supplied under this specification shall be included in vendor's scope of supply.

5.16.1 Fire & Gas Detection System

A dedicated fire & gas detection system for each PGC train shall be provided as the part of UCP. Fire and gas detection system dedicated for each PGC train shall primarily be designed as per the requirements of Functional specification for fire and gas detection system, Spec no.- 3500. However, following requirements shall also be met:

Fire & Gas detection system components shall be type approved by UL and/ or FM or LR.

F&G detectors in the PGC module/ shelter shall be directly connected to the platform F&G system.

F&G detectors inside the GT enclosure / within the compressor shall be directly connected to the dedicated F&G system for the train in the UCP. Compressor package's FSD and ESD signals shall be made available in form of Volt free contact outputs for connecting to Main platform F&G and ESD system.

Fire Detection

Following methods shall be utilized for detection of fire/ manifestation of fire:

1. Flame detectors- UV and UV-IR detectors or MIR.
2. Thermal detectors.
3. Fusible plugs.

Flame & thermal detectors shall be installed as per the requirements of NPFA 72E, API-RP-14G. Fusible plugs shall be installed as per the requirements of API-RP-14C. All detectors shall meet the technical / functional requirements of relevant NPFA / ISA / API codes/ standards/ recommended practices/ technical reports.

On activation of flame detectors in the PGC module/ shelter signaling confirmed fire shall lead to platform Fire Shutdown (main/ upper deck) accompanied with audible/ light flashing alarm in local area as well as in the control room.

On activation of flame / thermal detectors inside the PGC- gas turbine enclosure signaling confirmed fire shall lead to only (affected) unit/train Fire Shutdown. Unit/train fire shutdown shall bring the train to failsafe shutdown condition inclusive of its ventilation system and shall also lead to the release of respective fire suppressant.

A pressurized Fire Shutdown (FSD) Loop with fusible plugs and manually operated valves shall be provided covering entire PGC module/train. Manually operated valves shall be located strategically all over the package/module wherever emergency shutdown (ESD) manually operated valves are installed. The FSD loop shall be terminated at the package/train battery limit from where it will be connected to the platform FSD loop by the contractor. Depressurization of FSD loop shall lead to platform FSD (main/ upper deck).

A pressurized ESD loop with manually operated valves shall be provided covering entire PGC module/train. Manually operated valves shall be located strategically all over the package/module as per the requirements of API-RP-14C. The ESD loop shall be terminated at the package/train battery limit from where it will be connected to the platform ESD loop by the contractor. Depressurization of ESD loop shall lead to platform ESD.

Gas Detection

Following gas detectors shall be provided:

1. Combustible gas detectors
2. Toxic gas detectors

Combustible gas detectors shall be inclusive of Hydrocarbon and Hydrogen gas detectors. Hydrocarbon detectors shall be IR technology based and Hydrogen detectors shall be Electrochemical cell technology based. Combustible gas detectors shall cover the entire combustible gas processing area and potential combustible gas release points. Installation shall meet the requirements of API-RP-14C. All detectors shall meet the technical / functional requirements of relevant NFPA / ISA / API codes/ standards/ recommended practices/ technical reports.

Toxic gas detectors shall be inclusive of Hydrogen sulphide (H_2S) as detectors. H_2S detectors shall be based on Electrochemical cell technology. H_2S detectors shall cover the entire H_2S gas handling area and potential H_2S gas release points. Installation shall meet the requirements of API-RP-14C. All detectors shall meet the technical / functional requirements of relevant NFPA / ISA / API codes/ standards/ recommended practices/ technical reports.

Following requirements shall also be met:

1. Inside the combustion air intake system. Gas detectors shall be located in the low velocity area of the intake system and shall meet the performance requirements under the velocity conditions of combustion air intake system.
2. For each ventilated space, gas detectors shall be provided such that:
   i. Where the air is exhausted at a number of points, from one area and drawn through a common ducting, each specific air flow point shall be individually covered by the gas detectors. Gas detectors shall be located within the ducting, and in the air lock lobby, if any.
   ii. Where the air is exhausted via louvers on outside walls, gas detectors shall be positioned inside the module and adjacent to the louvers.

On activation of gas detectors in the PGC - gas turbine package/module, module shelter signaling confirmed gas release shall lead to platform ESD

accompanied with audible/ light flashing alarm in local area as well as in the control room.

On activation of gas detectors inside the PGC- gas turbine enclosure signaling confirmed gas release shall lead to only (affected) unit/ package Shutdown. Unit/ package/train fire shutdown shall bring the package/train to failsafe shutdown condition.

Inside PGC- gas turbine enclosure Fire & Gas detection system shall also meet the following requirements:

1. All fire & gas detectors shall be terminated directly to the dedicated logic solver/ PLC.

2. It shall be possible to do maintenance activities like calibration of detectors by a single person without forcing the input configuration at the logic solver end and without affecting the operation of rest of the fire & gas detection system.

3. Other requirements as indicated in cl no. 5.15 of this specification shall also be met.

5.16.2 Fire Suppression

Vendor shall design, furnish and install inside the module shelter and turbine enclosures a Fire Suppression System as per the NFPA standards.

The Fire suppression system shall consist of an automatic release of CO_2 or Clean agent extinguishing agent inside turbine enclosure as well as the deluge type fire water spray network inside the module shelter. Fire water deluge system will not be provided however, for the turbine enclosure. Cylinders supplied for the CO2 or clean agent extinguishing agent shall be PESO approved for refilling in India.

Fire Suppression system for an area shall be designed so that it can be activated automatically by receiving a signal from any of the two different type of fire detection instruments located in that area, i.e. U.V. Light Detectors and Thermal Detectors. The Fire Suppression system shall also be manually activated by an operator in the event of a signal from any of the devices. Each area protected by CO_2 system shall have adequate primary source and 100 percent back up supply manifolded together. The

extinguishing system shall provide high speed release of CO_2 / Clean Agent based on the concept of local flooding. A suitable time-delay sound and flashing red light alarm shall be provided before the release of CO_2 to facilitate escape of the personnel.

The fire water deluge system containing adequate number of sprinklers (spray nozzles) shall be provided over the equipment such as compressor, knock-out drums (suction, discharge and inter stage), fuel gas unit filter coalescer area etc. The water spray system shall be designed in accordance with NFPA-15 and API-14G recommendations.

The spray nozzles shall be suitable for sea water service and shall be as detailed in Functional specification for piping design 2004A.

The Fire water header shall be terminated at two points at the battery limit from where it will be connected to the fire water supply system by others. The two points shall be as far apart as possible.

The remote fire & gas panel for compressor shall have self integrity check modules for gas/thermal detection system, executive line monitoring modules for all alarm/trip contacts, input/output fuse status, display for fault in self-checking facilities, Co_2 (or Clean Agent) pressure/weight monitoring modules, Co_2 (or clean agent) primary / secondary selection facility etc.

The requirements for Fire & Gas protection for Turbine (and Gearbox) enclosures are detailed in the Functional specification for gas Turbine Drive 5501F.

Passive fire protection measures shall be as per the requirements of functional safety specification (Spec. No. 5102) and shall be incorporated in to PGC /Module design.

Space for the following Hose-reels, eye wash & Safety shower shall be marked on the compressor layout. (Scope of supply by vendor / Contractor).

- Fire Water Hose Reels (FWHR) .
- Dry Chemical Hose Reels (DCHR) .
- Wash Down Hose Reels (WDHR) .
- Eye wash & safety shower (EW & SS) .
- DCP skid

5.17 Mounting Plates

The compressor/ turbine and gearbox shall be packaged with oil drain pans and bottom sound dampening closing plate (where required) suitable for multi-point support on the platform deck. Depending on the Contractor's recommendations compressors, turbines and gearboxes may be mounted on individual sub-bases that are assembled onto a structural steel floor deck that is designed to rest directly on the platform deck girders. Options of providing a three (3) point base plate with anti-vibration mounts should be evaluated and selected based on the proven design and cost economic advantage.

Base plates shall be designed to prevent any platform movement from affecting the machine alignment. The deflection of complete bases due to all static loads shall not be detrimental to the equipment during transit or when operating.

The Contractor shall provide drains within the base plates and these shall be piped to the package train edge. Open drains shall be covered with a removable grating. The Package train floor deck shall be designed to prevent rain water flowing down to lower decks. Drainage systems shall be adequately designed to collect water from individual items of equipment to a common header.

In accordance with the design code the Contractor shall provide calculations showing the Safe Working Load of all lifting points.

The minimum design and structural requirements for package train shall be in accordance with the Functional specification for Packaged Equipment (Spec. no. 5100P)

Adequate walkways and corridors shall be provided around all items of equipment to facilitate access for maintenance personnel and their equipment.

The Contractor shall provide the necessary data required for structural dynamic and static analysis of the deck support steel. This information shall include but not be limited to the following:

- Package weights and centre of gravity at operating condition
- Operating speeds for all rotating pieces of equipment

The Contractor shall submit a set of preliminary drawings for proposed Package/compressor train and module with its Tender. The drawings shall display anticipated Package/train and module dimensions, weights, general item layouts and interconnection orientations.

Where required the Contractor shall furnish anti-vibration mounts.

5.18 Insulation

The contractor shall provide personnel protection for those parts on external equipment surfaces that can reach temperatures more than 71 ^{0} C as per API 14 C.

All equipment, vessels and piping that require insulation, shall be insulated in accordance with the Function specification for insulation of piping and equipment- 2006.

6 INSPECTION, TESTING AND CERTIFICATIONS

6.1 General

The overall responsibility for inspection and testing rests with the Contractor. The Company reserves the right to witness any manufacturing operation, assembly or testing of the Compressor Packages within the Contractor's or Manufacturers plant and review any audits and reports for the subject works.

6.2 Quality Assurance

The Contractor shall demonstrate that they operate a quality system in accordance with an acceptable international standard.

The Contractor shall submit a quality control plan for Company review. The Contractor shall provide facilities for and cooperate with Company and statutory authority inspectors during manufacturing, assembly and testing.

6.3 Shop Inspection and Testing

All of the PGC system equipment required to meet the design conditions as stated herein shall be completely assembled and "function tested" at the Contractor's shop in accordance with these specifications.

The Contractor shall submit for review and approval by the Company a comprehensive Inspection and Test Plan (ITP) covering all relevant components, completed equipment and systems. No work by the Contractor or its subcontractors may commence without prior approval by the Company of the ITP's.

The Test procedure shall include as a minimum the following requirements:

- Test objectives
- Test set up and lay out
- Test condition
- Equipment and instruments
- Test procedure (Sequence of activities during the test)
- Calculations and sample log sheet
- Acceptance criteria

A detailed test procedure of shop tests shall be submitted at least two (2) months in advance of any testing and shall be approved by the Company.

The entire PGC train shall be tested functionally in the completed assembled configuration.

A dimensional check of the Package assembly and components shall be performed for compliance with approved drawings.

6.4 Material and Welding Inspection

Compressor casings shall be radio-graphed or ultrasonic tested in all critical areas such as areas nozzles and sections having an abrupt change of section likely to lead act as stress risers. The Contractor shall detail the critical areas for approval by the Company.

Non-destructive material tests and pressure testing shall be in accordance with the ASME Section VIII, Division 1 and Functional specifications for unfired Pressure Vessels-5601 and Functional specification for Piping

Fabrication and Installation 2004B. The tests shall be witnessed and approved by an inspector representing the Company.

All structural welds shall be tested in accordance with Functional Specification for Welding and NDT-2009F

Radiographic, ultrasonic, magnetic particle or liquid penetrant inspection of welds shall be in accordance with the ASME / ASTM specifications and Functional Specification for Welding and NDT-2009F.

All butt welds shall be 100% examined by radiography and pressure retaining fillet welds shall be 100% examined by magnetic particle. Should radiography prove impractical, 100% ultrasonic inspection shall be permitted with the approval of the Company.

The final non-destructive examination of welds for acceptance purposes shall be carried out after completion of PWHT, where applicable. At the manufacturer's option, radiography may be performed before PWHT, in which case an ultrasonic examination shall be performed after PWHT for acceptance purposes.

All Package and vessel pad eyes shall require 100% NDT.

All non-destructive testing shall be performed by a third party approved and accredited Non-Destructive Testing (NDT) inspection organization.

Full traceability of all material components (to material certificates) is required.

Full traceability of all welds is required. The Contractor shall provide a weld map with full traceability to individual weld numbers. The traceable data shall include NDT reports, welding procedure and welder number.

6.5 Gas Compressor

The gas compressor shall be subjected to the following shop tests in accordance with API 617:

- A full rig test of all dry gas seals as per vendor standard procedure.

- Each impeller shall be subjected to an over-speed test of at least 115% of the maximum continuous speed for a period of minimum 1 minute~~s~~. After each over-speed test, dye penetrant testing shall be carried out as per the requirements in 6.4 above.

6.6 Unit Control Panel (UCP)

The tests shall be conducted at factory/works and shall include the following:

- A 48 hour burn-in period with internal cabinet temperature at rated maximum;
- A seven day burn-in period (which may include the 48 hour period as above) during which the controls are operated under simulated running conditions;
- A minimum of twenty one “power off-wait to steady state condition-power on” sequences;
- Full simulation testing of all control, logic and sequences by interfacing with a dedicated test PLC;
- A noise immunity test
- A dynamic simulation test shall be carried out to prove the function of the configured system. The system shall also be tested for performance of its self-diagnostic capability.
- Type test certificate containing above tests of the UCP shall be submitted.
- Tests shall be certified by the packager QA/QC/inspection agency and submitted for records.

6.7 Hydrostatic Tests

Hydrostatic tests in accordance with API 617 shall be undertaken on completed Compressor casing, including covers and all welded connections.

Pressure Vessels and Heat Exchangers shall be tested as described in the respective Functional specification no. 5601 and 5701F.

6.8 Shop Tests

All testing is to be performed as per relevant equipment code and functional specifications.

Mechanical run test for compressor, gas turbine and gear box shall be carried out as per codes at respective equipment manufacturer's shop.

The Company's minimum test requirements below shall be in addition to Contractor's standard tests and tests as per relevant codes.

6.8.1 Performance Tests

The vendor(s) shall carry out a performance test to demonstrate that the performance of the compressor, gas turbine and gear box meets the guaranteed values.

Performance tests shall be conducted at the respective equipment manufacturer's works for all items and auxiliaries.

The Contractor will be required to supervise the testing and demonstrate the surge control limit of each of the gas compressors stages.

The performance test conditions, instrumentation and procedures shall be advised by the Contractor/vendor in its proposal and be approved by the Company prior to tests. Tests shall be witnessed by the Company and shall be carried out according to the requirements of ASME PTC 10, 1997 type 1 or type 2, to demonstrate the full range of operating conditions.

Performance tests shall also be conducted on Gearboxes (where supplied) and Turbine drivers at full speed and full load according to the requirements of API 613 and Turbine specification No. 5501F respectively.

6.8.2 String Test

A complete mechanical string test (full speed and full load) for not less than four (4) continuous hours shall be carried out on the turbine/compressor train complete with all Contractor supplied equipment, including gearboxes, lube oil systems, bases and control systems specific to the order.

This test shall be carried out for all modules at yard.

The Contractor shall provide all the necessary interconnections between Package and UCP for the purpose of tests.

The test shall confirm the mechanical and operating integrity of the complete train and supporting equipment and shall be used to determine acceptable operating speeds, seal and bearing performance, vibration levels, and to confirm critical speeds with actual run-up and coast down performance.

This test shall include but may not be limited to verifying the performance of such systems as:

- Package control and instrumentation system
- Anti-surge and recycle control systems
- Pre-start and cranking systems
- Package safety systems such as shutdowns, alarms, sensors and monitors
- Enclosure ventilation system reference maximum allowable enclosure temperatures
- Enclosure sound attenuation performance; Refer to clause 6.8.3
- Company's remote alarms and shutdown

6.8.3 Noise Test

As part of the String test of the PGC Module, the Contractor shall conduct tests of sound pressure levels generated by the Train.

Sound levels shall be measured as per FS 5002F, with the compressor train being operated at full load & full speed.

6.8.4 Offshore Performance Test

After installation and commissioning on the platform, the PGC module shall be subjected to a continuous mechanical integrity test of the unit that will include a continuous (72) hour PGC train test at rated speed at full load.

7 SPARE PARTS & TOOLS

7.1 Spare parts

The overall maintenance philosophy of platform is to keep the onboard maintenance as low as responsibly practical and minimize equipment sparing. Based on overall platform philosophy, it is essential to minimize the need of breakdown maintenance by using predictive condition monitoring techniques and carry out preventive routine maintenance.

In view of above, a complete list along with price of maintenance and spare parts required for the compressor package shall be furnished. This shall include spares for start-up, commissioning and one year's operations.

The vendor shall provide a recommended spare parts list to cover the commissioning and start-up for all Major and associated equipment. Where major subassemblies such as rotating elements are recommended, pricing shall include for the supply of dedicated robust transport and storage containers manufactured in corrosion resistant materials such as 316 SS or equivalent.

Contractor shall supply spares for commissioning and start up.

All spare parts furnished by the Contractor shall be wrapped and packaged to preserve the parts as in original condition. The same parts shall be appropriately tagged (preferably using SS tags) and coded so that later identification as to their intended equipment usage will be facilitated. All items supplied shall be packaged separately and clearly marked as "Spare Parts" and shipped with the equipment in accordance with the instruction from the Company. Packing lists shall be furnished complete and in detail so that parts can be handled without uncrating, should this be required.

Recommended spares should take into account related factors of equipment reliability, effect of equipment down-time upon production and safety, cost of parts and availability of equipment service facilities.

7.2 Special Tools

The Contractor shall provide a list of any special tools required for the erection, maintenance for the all equipment comprising of the Process Gas Compression Package. Included in the list of special tools shall be tools required for access & removal operations such as mechanical handling and lifting aids, slings, spreader bars, alignment tools and brackets, Gas Generator fixing trolleys, turbine and compressor rotor cradles. Tools shall also include any equipment necessary for carrying out inspection operations

such as test kits and Boroscopes complete with video monitor, recording equipment and related accessories. Also Portable emission monitoring meter shall be included in the special tools.

Two sets (for two or more identical units) or one set (for one unit) of such special tools & tackles shall be provided by the vendor. However, only one boroscope and one portable emission monitoring meter shall be provided common for complete module.

Prior to shipment each special tool shall be tagged with stainless steel tag detailing its description and where it is to be used.

8 CONTRACTOR DATA REQUIREMENTS

8.1 Documentation

A detailed list of vendor data requirement is listed in Annexure –VDL of this specification.

8.2 Special Studies

Calculations shall be provided that includes a complete rotor dynamic and vibration calculations for the shaft assemblies to applicable API standards. The analysis must consider shaft seal stiffness and aerodynamic cross coupling.

Independent studies shall be carried out to ascertain the reliability and acceptance of the PGC train with respect to the following :

- A lateral analysis for each major component shall be provided.

- A torsional analysis for the complete drive system shall be provided. The analyses shall cover the entire operating speed range of the machinery train. Criteria for acceptance to be proposed by contractor for company's approval. Rotor natural frequencies that fall within 10% of the operating range are to be avoided.

  Compressor manufacturer shall do torsion analysis of the complete compressor train using equipment dimensions and stiffness data

furnished by Gas Turbine and Gear Box Vendors. Gas Turbine Vendor shall do independent torsion analysis for the complete train. In case of an appreciable difference (more than 3%) in the result of these independent studies, the compressor manufacturer shall resolve the discrepancies. Results of all such studies shall be furnished to the company for review. This analysis shall be conducted for all the operating cases, modes and alternatives possible for gas compression.

9 PAINTING AND PREPARATION FOR SHIPMENT

9.1 Painting and Protective Coating

After all shop tests are completed, all exterior parts of the compressor packages, except machined surfaces, shall be painted. Exposed machined surfaces shall be coated with a heavy duty rust preventative.

Painting and protective coatings and the procedures for preparation for painting shall be as specified in the Functional specification for Protective Coatings -2005 or as per vendor's standard paint specification for offshore platform.

9.2 Preparation for Shipment

Prior to shipment, all instrumentation and other equipment vulnerable to damage shall be disassembled and boxed separately for shipment. All items shall be adequately packed and protected against damage during shipment. Each crate, bag or packages shall be clearly identified with the purchase order number and identification symbol, and shall be securely fastened to the skid.

Exposed machined surfaces shall be coated with an easily removable heavy duty rust preventative.

All flanged openings shall be protected with steel plate covers attached by proper bolting and sealed with plastic compound.

All electrical control enclosures shall be appropriate plugged at entries and loaded with silica gel bags.

Screwed connections shall be protected with threaded forged steel plugs.

Contractor shall state in the proposal his recommendations for long term storage (up to 12 months) for both indoor and open air storage in a marine environment.

Each item of equipment shall be checked for its suitability to resist horizontal forces during sea transportation. Where equipment is not adequate, brackets for attaching sea fastenings shall be provided by the Contractor.

10 WARRANTY

Vendor shall have final and total responsibility for the design and performance of all equipment furnished by him. Vendor shall warrant that the equipment furnished by him and the performance of the said equipment is in accordance with this specification and general codes.

Vendor shall warrant and guarantee that all the materials and equipments incorporated in the entire equipment under his Scope shall be new, and all work shall be of good quality.

Vendor shall also be responsible for all system and detailed designing, the aspects of which may not have been covered in this specification as regards the workmanship, performance etc., of the equipment supplied by him.

Vendor shall, upon notice from Company, make good at his own expense all defects found during the warranty period expeditiously.

Vendor shall, if required, supply the services of an experienced engineer to supervise the correction of any defects found during the warranty period.

Vendor shall also warrant and guarantee all work, materials and equipment furnished by any Sub-Vendor and which is incorporated in the Package.

ANNEXURE – I

INSTURMENTS & ANNUNCIATORS LITS

(For Unit Start, Stop, Monitoring and Protection etc., - per Train

S.NO.	DESCRIPTION	LOCATION OF INDICATOR/PUSH BUTTON ETC.		ALARM/TRIP WITH AUDIO VISUAL INDICATION AT UCP	
		Local panel (LP)/Local Gauge Board	Remote Panel (UCP)	Pre-Alarm	Trip (with simultaneous alarm
1	2	3	4	5	6
A	**GENERAL**				
1.	Start counter		X [P]		
2.	Hours Run Meter		X [P]		
3.	Ammeters for Auxiliary Motors	X			
4	Gas Detection Summary			X [A]	X [A]
5.	Fire Detection Summary				X [A]
B.	**PUSH BUTTONS / SWITCHES**				
1.	A.C. Power ON / OFF	X	X		
2.	D.C. Power ON	X	X		
3.	Control Power ON / OFF Switch		X		
4.	Master Selector switch Local / Remote (For package/train/module)		X		
5.	Selector Switch Auto/Remote Manual /Local Manual (For Auxiliaries)		X		
6	Control Indicators lamp test push button	X	X		
7.	Trip Reset Push Button	X	X		
8	Alarm unit acknowledge /Reset / Lamp / Test Push	X	X		

S.NO.	DESCRIPTION	LOCATION OF INDICATOR/PUSH BUTTON ETC.		ALARM/TRIP WITH AUDIO VISUAL INDICATION AT UCP	
		Local panel (LP)/Local Gauge Board	Remote Panel (UCP)	Pre-Alarm	Trip (with simultaneous alarm
	Buttons				
9.	GG Liquid Wash	X	X [E]		
10.	Manual Gas Generator Start	X			
11.	Shelter Fan Start/Stop	X	X [E]		
12.	Preparation start	X	X [E]		
13.	Auto Sequential Start	X	X [E]		
14.	Normal shutdown	X	X [E]		
15.	Ventilated shutdown	X	X [E]		
16	Emergency shutdown	X	X [E] Push button also in DCS console		
17.	All auxiliaries Start / Stop	X			
C.	**CONTROL /STATUS INDICATORS**				
1.	Ready to Run Light (Plant Ready light)	X	X [E]		
2.	Preparation Start in Progress		X [S]		
3.	LO System Established		X [S]		
4.	Blow Down Valve Open		X [S]		
5.	Loading valve open		X [S]		
6.	Preparation start complete	X	X [E]		
7.	Start in progress	X	X [S]		
8.	Enclosure purged ready to start		X [S]		
9.	Lube Oil system established	X	X [E]		

S.NO.	DESCRIPTION	LOCATION OF INDICATOR/PUSH BUTTON ETC.		ALARM/TRIP WITH AUDIO VISUAL INDICATION AT UCP	
		Local panel (LP)/Local Gauge Board	Remote Panel (UCP)	Pre-Alarm	Trip (with simultaneous alarm
10.	Running indication all auxiliaries (Individual)		X [S]		
11	All auxiliaries healthy	X	X [S]		
12.	Gas Generator start initiated/Unit running		X [S]		
13.	Starter Motor on		X [S]		
14.	Gas Generator Purging		X [S]		
15.	Igniters on		X [E]		
16.	Fuel on	X	X [S]		
17.	Gas Generator Lit		X [E]		
18.	Starter Motor Disengaged		X [E]		
19.	Power turbine running	X	X [S]		
20.	Gas Generator above idling	X	X[S]		
21.	Ready to load		X[E]		
22.	Suction pressure control activated		X[E]		
23.	Shutdown in progress		X[S]		
24.	By pass valve open		X[S]		
25.	GG Decelerating to idling		X[E]		
26.	Gas Generator Run Down, Start Inhibited		X [E]		
27.	Ventilated shutdown	X	X[S]		
28.	Alarm system fault		X[S]		
29.	Valve open/closed indication for: 1.Shutdown valve on fuel gas supplier 2. Blow down valve		 X[S] X[S]		
30.	Dry crank in progress	X	X[S]		
D	**GAS GENERATOR**				
I.	**Temperature Indicators**				
1.	Exhaust Temperature –	X	X[P]	X(H)[A]	X(VH)[A]

S.NO.	DESCRIPTION	LOCATION OF INDICATOR/PUSH BUTTON ETC.		ALARM/TRIP WITH AUDIO VISUAL INDICATION AT UCP	
		Local panel (LP)/Local Gauge Board	Remote Panel (UCP)	Pre-Alarm	Trip (with simultaneous alarm
	Mean of 8 points min.			**Note 1**	X(VL)
2.	Air Compressor Inlet Air		X[P]		
3.	Air Compressor discharge		X[P]		
4.	PT Inlet temp./GG Exhaust Temp.		X[P]		
5.	Fuel Supply Temperature (Battery Limit.)	X	X[P]	X(L)[A]	
6.	Enclosure Temperature (GG & PT)	X	X	X(H)[A]	X(VH)[A]
II.	**Pressure Indicators**				
1.	Fuel Supply Pressure (Battery limit)	X	X[P]	X(L)[A]	X(VL)[A]
2.	Fuel supply pressure (Down Stream of pressure regulator	X	X[P]	X(H)[A] X(L)[A]	X(VH)[A] X(VL)[A]
3.	Fuel gas filter differential pressure	[P]		X(H) [A]	X(VH)[A]
4.	Inlet Air Filter differential Pressure	X(LD)	X[P]	X(H)[A]	X(VH)[A]
5.	GG compressor Discharge Pressure		X[P]		
6.	Ventilation system filter Pressure Drop	X		X(H)[A]	
III.	**Miscellaneous**				
1.	Speed Indicator	X	X[P]	X(H)[A]	X(VH) [A] (and over speed pick up fail)
2.	GG under speed				X[A]
3.	Fuel governing valve position feed back		X		X[A]

S.NO.	DESCRIPTION	LOCATION OF INDICATOR/PUSH BUTTON ETC.		ALARM/TRIP WITH AUDIO VISUAL INDICATION AT UCP	
		Local panel (LP)/Local Gauge Board	Remote Panel (UCP)	Pre-Alarm	Trip (with simultaneous alarm
4.	Fail to Crank				X[A]
5.	PT Locked Rotor (Under Speed)			X[A]	
6.	Starting Sequence Incomplete			X[A]	X[A]
7.	Auxiliary Sequence failure				X[A]
8.	Fuel System Malfunction			X[A]	X[A]
9	Fuel gas knockout pot Level	X		X(H)[A]	X(VH)[A]
10.	Fuel Gas Flow indication		X[P] **Note-2**		
11.	Fail to Ignite				X[A]
12.	Flame out				X[A]
	ENCLOSURE				
13.	Enclosure Purging differential pressure (GG & PT)	X		X(L)[A] Standby Fan start [E]	X(VL)[A]
14.	Fire extinguishing system (CO_2) discharged			X[A]	X[A]
15.	CO_2 bleaded off			X[A]	
16.	Enclosure Door unlocked Indicator	X	X	X[A]	
E.	**POWER TURBINE**				
1.	Speed	X	X[P]		X(VH[A] (and over speed pickup fail)
2	Speed Raise/Lower Control (Governor control)	X	X		
3.	Failure Exhaust over-			X[A]	X[A]

S.NO.	DESCRIPTION	LOCATION OF INDICATOR/PUSH BUTTON ETC.		ALARM/TRIP WITH AUDIO VISUAL INDICATION AT UCP	
		Local panel (LP)/Local Gauge Board	Remote Panel (UCP)	Pre-Alarm	Trip (with simultaneous alarm
	temperature S/D Device (Open Thermocouple Condition)				
4.	Common Pre-Alarm for all Trip-Alarm	X			
5.	Common Trip-Alarm for all Trip- Alarms	X			
6.	Running at Peak load		X(S)	X[A]	
F.	**COMPRESSOR**				
	GENERAL /MODULE				
1	Valve sequence failure				X[A]
2	Anti-surge valve open			X[A]	
3	Failure to load			X[A]	
4	Cooler fan vibration			X(H)[A]	
5	Suction gas temperature			X(H)[A]	
6	Compressor gas discharge Temperature			X(L)[A] X(H)[A]	X(VL)[A] X(VH)[A]
7	Discharge cooler temperature			X(H)[A]	X(VH)[A]
8	KOD Level			X(L)[A] X(H)[A]	X(VL)[A] X(VH)[A]
	Compressor Seal System			X(H)[A]	
10	Primary seal leak			X(H)[A]	X(VH)[A]
11	High and low Seal differential Pressure			X(H)[A] X(L)[A]	X(VH)[A] X(VL)[A]
G.	**LUB OIL SYSTEM(S)**				
I	FOR EACH LUB OIL SYSTEM FOLLOWING INSTRUMENTS SHALL BE PROVIDED				
1.	Lub oil reservoir level	X(LD)		X(L)[A)	X(LL)[A)

S.NO.	DESCRIPTION	LOCATION OF INDICATOR/PUSH BUTTON ETC.		ALARM/TRIP WITH AUDIO VISUAL INDICATION AT UCP	
		Local panel (LP)/Local Gauge Board	Remote Panel (UCP)	Pre-Alarm	Trip (with simultaneous alarm
	indicator	Reflex type		X(H)[A)	
2.	Lub oil reservoir temperature	X			
3.	Lube oil pumps (main & standby) discharge pressure	X			
4.	Main lube oil pump stop			X(F)[A] (start standby)	
5.	Standby lub oil pump failure			X	X
7.	Lub oil inlet temperature to oil cooler	X	X[P]		
8.	Lub oil outlet temperature from oil cooler	X		X(H)[A]	
9.	Lub oil filter differential pressure	X		X(H)[A]	
10.	Lub oil supply header pressure	X	X[P]	X(L)[A] Standby pump start	X(VL)[A] DC Pump start[S]
11.	Lub oil supply header temperature	X	X[P]	X(H)[A]	X(VH)[A]
12.	Lub oil outlet temperature each bearing, (GG, PT, Gear box, compressor)	X	X	X(H)[A]	
13.	Lub oil scavenge pressure (if applicable)	X		X(H)[A]	
14.	Accessory lub oil scavenge temperature (if applicable)		X		

S.NO.	DESCRIPTION	LOCATION OF INDICATOR/PUSH BUTTON ETC.		ALARM/TRIP WITH AUDIO VISUAL INDICATION AT UCP	
		Local panel (LP)/Local Gauge Board	Remote Panel (UCP)	Pre-Alarm	Trip (with simultaneous alarm
15.	Lub Oil overhead tank level (if provided)	X		X(L) (Low start interlock)	
16.	Flow Glass Each oil return line	X(LD)			
II.					
1.	Control Oil pump (working & standby) delivery pressure	X			
2.	Control oil pressure	X	X[P]	X(L)[A]	X(VL)[A]
3.	D.C. Lub oil pump running	X			
4.	D.C. Lub oil pump failure				X[E][A]
5.	D.C. Lub oil pump Discharge pressure	X			
H.	**VIBRATION MONITORING**				
1	Vibration Monitor failure			X[A]	
	Following Instruments/ Devices shall be provided, separately, for GG, PT, Gear Box, Compressor				
2.	Shaft Journal Vibrations (2 Probes for Each Bearing)		X[P]	X(H)[A]	X(VH)[A]
3.	Shaft Axial Displacement, proximity probes (2 probes for each thrust bearing)		X[P]	X(H)[A]	X(VH)[A]
4.	Key phaser probe and proximeter,		X		
5.	Accelerometer probe at each bearing housing (X,		X[P]		

S.NO.	DESCRIPTION	LOCATION OF INDICATOR/PUSH BUTTON ETC.		ALARM/TRIP WITH AUDIO VISUAL INDICATION AT UCP	
		Local panel (LP)/Local Gauge Board	Remote Panel (UCP)	Pre-Alarm	Trip (with simultaneous alarm
	Y, Z, Direction)				
6.	Cooler Fan Vibration (Combined)			X(H)[A]	
I.	**BEARING TEMPERATURE MONTIROING (NOTE-4)**				
1.	Bearing metal temperature, RTD's to be provided for each bearing (GG, PT, Gear Box, Compressor)		X[P]	X(H)[A]	X(VH)[A]

** In addition provide local gauges.

NOTE: 1
Differential temperature protection
NOTE: 2
Pressure and temperature compensated
NOTE: 3
Only if waste heat recovery unit is provided
NOTE: 4

Radial Bearings

- For each bearing, two RTD's located at two prominent places shall be provided.

Thrust Bearings

- Two RTD's on each active and non-active side, separated 180° apart s shall be provided.

- For tilting pad bearings: Three RTD's shall be provided on active side, and for non-active side two RTD's shall be provided.

NOTE: 5

Accelerometer shall be provided for gearbox where roller bearings are used.

REMARKS

DCS MONITORING / LOGGING

[S] STATUS

[E] EVENT

[A] ALARM

[P] PARAMETER INDICATION

1. LEGEND:

(H) : High

(VH) : Very High

(L) : Low

(LGP): Gas Generator Local Gauge Panel

(LD) : Locally Mounted

(F) : Failed

(VL) : Very Low

2. Additional instrumentation, if any, required for normal and safe operation of the package/train shall also be supplied by the Vendor.

3. All monitoring and other functions included in this Annexure-I shall be repeated in the operator console of distributed control system.

ANNEXURE – CP

VENDOR/MANUFACTURER'S EXPERIENCE RECORD
COMPRESSOR / GAS TURBINE / CONTROL PANEL – TRAIN/ MODULE

S.N	PARAMETER	INFORMATION ON THE OFFERED MODEL	INFORMATION ON EXISTING INSTALLATIONS		
			1	2	3
A	B	C	D	E	F
1.0	Size (L X W X H)				
1.1	Compressor/Gas Turbine/Gear Box Skid				
1.2	Module				
2.0	Weight (Module)				
3.0	No. of Support points (Skid)				
4.0	Compressor Data				
4.1	Suction Capacity				
4.2	Inlet Outlet Pressure				
4.3	No. of Compressor Casings				
4.4	Compressor Make/Model				
5.0	Driver Data				
5.1	Type of Driver				
5.2	Driver Rating				
5.3	Driver Make/Model				
6.0	Whether Gear Box used (Yes/No)				
7.0	Lub oil/fuel Treatment systems included (Yes/No)				
8.0	Control Panel Make				
9.0	Engineering for the train/ Package/ Module done by				
10.0	Project Management by				
11.0	Fabrication/Assembly of the Package/Module by				

12.0	Fabrication/Assembly of the Package/Module done at Shop (Address)				
13.0	Testing (including module full – speed & load test) done at				
14.0	Location and Address of the Plant/Platform where the unit is in operation with Name / Address / Telephone no./Telex no. of Contact person.				
15.0	Supply Date				
16.0	Commissioning Date				
17.0	Operating Hours (As on_____)				
18.0	Purchaser (Name & Address)				
19.0	Major Problems faced, if any.				

NOTE:

Since the above information will be utilized to assess vendor's capability / experience it is in vendor's interest to pick up those cases out of total list of references which most closely match the operating conditions/major equipment type/size and rating of the present offer.

ANNEXURE – C

VENDOR'S/ MANUFACTURER'S EXPERIENCE RECORD (FOR CENTRIFUGAL COMPRESSORS)

S.NO	PARAMETER	INFORMATION ON THE OFFERED MODEL	INFORMATION ON EXISITING INSTALLATIONS.		
			1	2	3
A	B	C	D	E	F
1	Make				
2	Model Designation each casing				
3	Number of Casings				
4	Codes/Standards Applicable				
5	Service				
6	Name of offshore Platform where Compressor is used				
7	Shop where compressor is manufactured and tested with location and address				
8	No. of hours of operation completed as on _____.				
9	**Operating / Design Parameters**				
9.1	Gas handled i) Mol % H_2S (maximum) in the gas ii)Mol % CO2 (maximum) in the gas				
9.2	Mol. Weight				
9.3	Maximum/Minimum suction Pressure				

S.NO	PARAMETER	INFORMATION ON THE OFFERED MODEL	INFORMATION ON EXISITING INSTALLATIONS.		
			1	2	3
	(Kg/cm2a) each casing				
9.4	Discharge Pressure Maximum Kg/cm2a) each casing				
9.5	Max. suction capacity M^3 /hr) each section				
9.6	Shaft power of compressor (KW) each casing/ Total				
9.7	RPM (if variable give range)				
9.8	Maximum Continuous Speed (RPM)				
9.9	Overall polytrophic efficiency Each section.				
9.10	(Driver				
9.11	Type/ Make/ Model/ Rating (KW)				
10	Furnish following for each stage:				
10.1	No. of Impellers				
10.2	Inlet Pressure (Kg/cm2a)				
10.3	Inlet Temperature (°C)				
10.4	Actual inlet volume flow Rate (M3/H)				
10.5	Discharge Temperature (°C)				
10.6	Polytrophic efficiency				
10.7	Polytrophic Head				
10.8	Discharge Pressure (Kg/cm2a)				

S.NO	PARAMETER	INFORMATION ON THE OFFERED MODEL	INFORMATION ON EXISITING INSTALLATIONS.		
			1	2	3
11	Furnish following for Each casing:				
11.1	Model				
11.2	No. of Stages/ No. of side Streams				
11.3	Casing Split				
11.4	Casing material				
11.5	Cast/Welded				
11.6	Maximum casing pressure/ Design Pressure (Kg/cm^2g).				
11.7	No. of impellers/ Maximum No. of impellers in casing				
11.8	Span between Brgs. (mm)				
11.9	Critical Speed $1^{st}/2^{nd}$ Lateral				
11.10	Shaft diameter under Bearing/ Impeller/ Coupling (mm)				
11.11	Type and make of journal bearing				
11.12	Type and make of thrust bearings				
11.13	Shaft material				
12	Furnish following for each impeller separately: (separate sheet may be used for each reference & proposed one)				
12.1	Impeller Type/Designation Open/Close- 2D/3D				
12.2	Method of				

S.NO	PARAMETER	INFORMATION ON THE OFFERED MODEL	INFORMATION ON EXISITING INSTALLATIONS.		
			1	2	3
	Fabrication				
12.3	Inlet Mach. No.				
12.4	No. of vanes				
12.5	Blade Angel				
12.6	Diameter of Impeller/Maximum Impeller Dias (mm)				
12.7	Impeller tip speed at max. cont. Speed m/s.				
12.8	Impeller material				
	Yield strength of impeller Material, (Kg/mm2)				
	Max. actual stress at Maximum continuous speed and 120% of Maximum continuous speed (Kg/mm2)				
	Method of mounting of impeller on shaft				
13	Couplings: (Gear Box-Compr. / L.P.Casing-H.P. Casing) - Type - Make - Model/Size - Rating/S.F.				
14	Seals: - Type - Make Model & Size -Seal face material (if				

S.NO	PARAMETER	INFORMATION ON THE OFFERED MODEL	INFORMATION ON EXISITING INSTALLATIONS.		
			1	2	3
	mechanical seal used)				
15	Control Panel Make -Local - Remote				
16	Lub oil system :				
16.1	Code/Standard Applicable				
16.2	Is lub oil system common with driver?				
16.3	Manufacturer of L.O. consoles.				
17	Base Plate :				
17.1	Is it common with Driver?				
17.2	Is it single piece or dowelled and bolted				
17.3	No. of support points				
17.4	No. of lifting points				
18	General Information				
18.1	Date of supply of the entire Unit				
18.2	Date of commissioning of The entire unit.				
18.3	Name and address of the purchaser				
18.4	Location and address of Plant (with telephone and Telex no.) where the unit is in Operation with name of contact Person.				
18.5	Major problems encountered During				

S.NO	PARAMETER	INFORMATION ON THE OFFERED MODEL	INFORMATION ON EXISITING INSTALLATIONS.		
			1	2	3
	commissioning and till date In operation				

NOTES:

1. While stating the model no. and type, the vendor shall explain meaning of each figure or letter used in the model/type.

2. While furnishing the materials, where asked for, the vendor shall furnish ASTM equivalents.

3. Since the above information will be utilized to assess proveness of offered model, it is in the interest of the vendor to pick up those cases out of the total list of references which most closely match the offered model and also, the vendor shall ensure that each and every information asked for is furnished correct and complete in all respect.

4. Vendors standard reference list for the offered model shall also be enclosed with his offer.

5. Where informations are to be indicated on each stage/each section/each casing basis, for example under S.No. 10, 11, 12, etc., bidder should repeat those columns based on the offered design. Similarly other informations wherever applicable should be repeated in accordance with the offered design supply.

ANNEXURE-GB

(VENDOR/MANUFACTURER'S EXPERIENCE RECORD – GEAR BOX)
GEAR BOX MODEL OFFERED:

S.NO	PARAMETER	INFORMATION ON THE OFFERED MODEL	INFORMATION ON EXISITING INSTALLATIONS		
			1	2	3
A	B	C	D	E	F
1	Manufacturer				
2	Model				
3	Size				
4	Driver (Type/make/model)				
5	Driven Machine (Type/make/model)				
6	Codes/standards followed				
7	Driver rating				
8	Gear box rating				
10	AGMA/API S.F.				
11	Gear Ratio				
12	No. of stages				
	Centre to centre distance				
13	Maximum continuous speed(In/Out) RPM				
14	Pitch line velocity (M/sec)				
15	Tooth profile				
16	Single Helical/Double Helical				
17	Type of Journal Bearings- -Gear shaft - Pinion shaft				
18	Bearing Journal Speed (M/sec) - Gear shaft - Pinion shaft				
19	Type of Thrust Bearing - Gear shaft - Pinion shaft				

S.NO	PARAMETER	INFORMATION ON THE OFFERED MODEL	INFORMATION ON EXISITING INSTALLATIONS		
			1	2	3
20	Supply date/commissioning date				
21	No. of operating hours as on				
22	Location and address of Installation.				
23	Name and address of Purchaser with telex No.				
24	Gear Manufacturing plant(Location/Address)				
25	Major problems encountered, if any.				

NOTE:

1. Since the above information will be utilized to assess vendor's capability/experience, it is in the vendor's interest to pick-up those cases out of total list of reference which most closely match the operating conditions/design data of the present offer

2. Vendor to clarify the meaning of each digit/letter used in the model designation.

3. This experience record should be submitted alongwith vendor's reference list for the offered model.

ANNEXURE-GT

EXPERIENCE RECORD – GAS TURBINES

S.NO	PARAMETER	INFORMATION ON THE OFFERED MODEL	INFORMATION ON EXISITING INSTALLATIONS		
			1	2	3
A	B	C	D	E	F
1	Model				
2	No. of shafts				
3	Service (Compressor drive / Power generation/etc.)				
4	Location (Onshore/Offshore)				
5	GG Model/Make (including manufacturer's name and address of plant where manufactured)				
6	PT Model/Make (including manufacturer's name and address of plant where manufactured)				
7	ISO rating (KW)/site rating with site conditions.				
8	Guaranteed ISO Heat rate with tolerance				
9	PT Inlet/Exhaust Temp. (ISO rated/site rated.)				
10	GG RPM (ISO rated/site rated)				
11	PT RPM (ISO rated/MCS)				
12.	Expected TBO for offered unit/Actual TBO for referenced unit.				
13.	Type of fuel used (Liquid/Gas/Dual fuel) with fuel specifications / details.				
14.	Supply date/date of commissioning				

S.NO	PARAMETER	INFORMATION ON THE OFFERED MODEL	INFORMATION ON EXISITING INSTALLATIONS		
			1	2	3
15.	Number of fired hours as on _____				
16.	Manufactured in (Address of Plant)				
17.	Assembled and tested in (Address of plant)				
18.	Name and address of Consultant, if any.				
19.	Purchaser (Name, address, Telex, No.)				
20	Location with and Address of plant where the unit is in operation with name, phone, telex no. of contact person)				
21	Major problems encountered during commissioning and till date in operation.				

NOTES:

1. Vendor to clarify the meaning of each letter/digit in the model Designations.
2. Since the above information will be utilized to assess proveness of offered model, it is in the interest of the Gas Turbine Vendor to pick-up those cases out of total list of reference which most closely match the offered model.
3. Gas turbine vendor to give exact address and telex no. etc. of 3 or 4 installations which may be visited by the purchaser/its representative if felt necessary.
4. This experience record should be submitted along with Vendor's standard reference list for the offered model.

Annexure – "VDL

VENDOR DATA REQURIEMENTS

Vendor shall furnish the data and drawings and other informations, equipment/auxiliary items specifications, and below:-

Sl. No.	Title	Certified Info. Reqd. After Purchase Order	
		Along with Purchase specification	Along with As-built
1.	List(s) of similar installations	X	X
2.	Leaflet/Catalogues of main equipment and auxiliaries)	X	X
3.	Manufacturing Schedule chart	X	X
4.	Monthly progress report	-	X
5.*	List of drawings required for information/approval	X	-
6.	Details of hook-up work required on offshore	X	-
7*	Deviation list(s) containing deviations from Bid Package including codes/standards, general specifications, job spec., data sheets, etc.	X	X
8.	(A) Performance curves for *- Gas Turbine *- Compressor (B) Gas Turbine correction curves	X	X
9.	* Completely filled in data-sheets for compressor / Gas Turbine / gear box/all auxiliary equipment	X	X
10.	a. Utility data sheet list with consumption b. Lubricants / consumables list with consumption	X	X
11.	Inspection / Maintenance requirements (Compressor / Gas Turbine / Gear Box)	X	X
12.	* Oil system(s) data sheets	X	X
13.	* Oil system Bill of material	X	X
14.	* Surge control line and anti- surge control loop	X	X

Sl. No.	Title	Certified Info. Reqd. After Purchase Order	
		Along with Purchase specification	Along with As-built
15.	Fuel gas specification	X	X
16.	* Fuel gas flow P&I Diagram	X	X
17	* Turbine cooling Air Diagram	X	X
18.	Gas turbine starting system write up	X	X
19.	Gas turbine fuel control system-write up	X	X
20.	Gas turbine air filtration system-write up	X	X
21.	Gas turbine washing/cleaning system write up	X	X
22.	Write up describing compressor operation, controls, any change overs etc. for various modes/cases	X	X
23.	* Compressor system blow down graphs (Flow rate and pressure vs. time)	X	X
24.	P & I Diagrams for a)* Process gas flow	X	X
	b)* Fuel treatment system	X	X
	c)* Fuel control system	X	X
	d)* Oil systems (Lub Oil, Seal Gas for dry gas seal)	X	X
	e)* Combustion Air intake system	X	X
	f)* Gas exhaust system	X	X
	g)* Ventilation/Pressurization / Cooling air system	X	X
	h)* Starting system	X	X
	i)* Turbine/Gear Box / Compressor / mounted / Installed instruments	X	X
	j)* Fire / Gas detection and suppression system	X	X
	k)* Water wash system	X	X
	l)* Heat recovery system(if provided)	X	X
	m)* Skid drain	X	X
25.	Oil console unit outline	X	X
26.	* Layout of compressor, driver Gear Box, and auxiliaries (Plot plan)	X	X
27.	* G.A. Drawing of compressor, driver, and auxiliaries including all piping and Contractor's	X	X

Sl. No.	Title	Certified Info. Reqd. After Purchase Order	
		Along with Purchase specification	Along with As-built
	piping connection.		
28.	* G.A. Drg. of each Skid (Turbine Gear box - compressor skid, Inlet Air filter skid, Lub oil system skid, Dry gas seal skid etc.)	X	X
29.	* Diagram showing removal of main equipments such as GG, Gear Box, etc.	-	X
30.	* Cross sectional drawing for Gas Turbine, gear box, and Compressor	X	X
31.	* purchaser's piping connection list	X	X
32.	Allowable forces and moments on nozzles	X	X
33.	Thrust force analysis for compressors	-	X
34.	* Stress/vibration/weight analysis of all lines connected to compressor/turbine	X	X
35.	* Strainers, knock-out drum design calculations	X	X
36.	* Knock-out drum fabrication drawings	X	X
37.	Location plan deluge nozzles	X	X
38.	Total module weight and break up including equipment. Dead load and operating loads.	X	X
39.	Overall skid layout plan	X	X
40.	Skid arrangements and support points	X	X
41.	Module elevations	X	X
42.	Number of lifts with dimensions/wt. Details	X	X
43.	* Loading data for foundation (compressor + Driver +auxiliaries)	X	X
44.	* Chock blocks liners and shims-Layout arrangements and details	X	X
45.	* Structural drawing of shelter	X	X
46.	* Skid drain P&I diagram	X	X
47.	* Lube/Emergency oil pump data sheet(s)	X	X
48.	Lube / Emergency oil pumps assembly drawing(s)	X	X
49.	* Gas/oil cooler data sheets	X	X
50.	* Gas/oil cooler assembly drawings	X	X

Sl. No.	Title	Certified Info. Reqd. After Purchase Order	
		Along with Purchase specification	Along with As-built
51.	Lube oil O/H tank(s), if any drawings/data	X	X
52.	* Coupling outline drawings and data	X	X
53.	Data sheets & performance curves for all motors	X	X
54.	* Cable/conduit and earthing curves layout for the skid	X	X
55.	* Single line diagram for the lighting distribution system	X	X
56.	* Layout drawings-shelter lighting, enclosure lighting and convenience outlets, etc.	X	X
57.	* Interconnection and interfacing drawings (electrical)	X	X
58.	Test certificates (electrical)	X	X
59.	* Complete instrument and annunciator list (start/stop, protection/monitoring)	X	X
60.	* Compressor operation sequence	X	X
61.	* Start-up / Shutdown (Normal and emergency) sequence block log diagram with Description	-	X
62.	Instrument Index	X	X
63.	* Shutdown and interlock logic diagram with description	X	X
64.	* Sequence logic diagram with description	X	X
65.	* Specification for instruments	X	X
66	* Specification for Interconnection cable (Instrument)	X	X
67.	* Loop schematics	X	X
68.	* Control Schematics/wiring diagrams	X	X
69.	Specifications & Logic diagrams for fire and gas detection system and fire suppression system	X	X
70.	* Deleted	-	-
71.	* Alarms/trips interlocks function list and wiring diagram.	X	X
72.	Inst. Mounting arrangement	X	X

Sl. No.	Title	Certified Info. Reqd. After Purchase Order	
		Along with Purchase specification	Along with As-built
73.	Multipoint temperature indicator point description	-	X
74.	* Inst. Data sheets/Material Requisitions / Purchase Requisitions	-	X
75.	* Sizing calculations	X	X
76.	* Inst. Installation standards	X	X
77.	Instruments/Electrical Bill of material	X	X
78.	Cable schedule (TIC)	X	X
79.	Cable schedule (signal)	X	X
80.	Cable schedule (alarm)	X	X
81.	Cable schedule (shutdown)	X	X
82.	* Hazardous Area Safety Certificate	-	X
83.	Piping layout drawings	X	X
84.	Ducting arrangement drawings	X	X
85.	Isometrics of piping wherever required	X	X
86.	Catalogues for components in Vendor's scope	-	X
87.	* All panels and gauge board(s) front facia and general arrangement drawing with bill of material.	X	X
88.	* Semigraphic schemes	-	X
89.	Inspection and test schedule (individual equipment & package/train)	X	X
90.	* Inspection and test procedures (customer specified tests)	X	X
91.	* Mechanical run test layout and Procedures	-	X
92.	* Performance test layout and procedure	-	X
93.	* Oil system operation test procedure	-	X
94.	* Sound level measurement procedure	-	X
95.	* Full load complete unit test (String Test) layout and procedure	-	X
96.	Vendor's own quality control practices/procedures and quality assurance programme	-	X
97.	Test certificates	-	X

Sl. No.	Title	Certified Info. Reqd. After Purchase Order	
		Along with Purchase specification	Along with As-built
98.	* Lateral and torsional analysis report	-	X
99.	Standard and special tool lists	X	X
100.	Mill test reports	-	X
101.	Inspection and test reports	-	X
102.	Shop repair manual including compressor / gas turbine / gear Box assembly showing critical clearances	-	X
103.	* Spare parts list (for one year operation	X	X
104.	* Start-up, commissioning spares list	X	X
105.	* Welding procedure	-	X
106.	Procedure of rust prevention	-	X
107.	Painting Procedure	-	X
108.	Operation & Maintenance manual	-	X

NOTES:

1* To be approved by the Purchaser before fabrication. Vendor shall furnish 8 prints of each document/drawing for approval. All dimensions and data shown on the documents and drawings to be in metric system.

2. Column No. 6 shall be commented by Vendor.

3. The documents listed are the minimum expected. Any document required/requested by COMPANY during engineering or construction shall also be made available.

4. Any additional document/ drawings not listed out but required for engineering or construction shall also be listed down by VENDOR for approval of COMPANY.

5. VEDNOR shall furnish a tabulation, namely, “instrument Index” of all instruments, like pressure gauges, relief valves, control valves, etc. used throughout the job. This tabulation shall show as a minimum item number, model number, manufacturer, service, size or range, purchase requisition and VENDOR reference number, specification sheet no., P&ID’s No. and other data which would facilitate easy identification and location.

6. Numbers assigned to instruments and related equipment as on P&I Diagrams shall be used throughout the job. When an item is deleted, its

number must not be reused, but must continue to be carried on the number control sheet as 'Deleted".

7. All documents/drawings shall be finally corrected to as built conditions at the time of handing over the plant. P&ID symbols and numbering of instruments shall be as per ISA. However, stage wise submission shall be made for all drawings even where only "Study Code" is indicated.
8. The vendor shall be held accountable for furnishing all materials in proper form and quantity in accordance with these requirements. The vendor shall also be accountable for the materials required from his sub-vendors.
9 Vendor data items requested above must be identified by the Purchase Order number and equipment tag number located on the cover section first page and said item and in the case of engineering drawings on each and every drawing.
10. Any Vendor data required as a result of issuing supplements to a Purchase Order shall be handled in the same manner as the original order.
11. All drawings and literature shall be in the English language and in metric measurement system. All drawings shall indicate "For Approval" or "Certified".
12. Mechanical catalogue and operational manual shall contain in addition statement No. 1 and statement no. 2 respectively.
13. Vendor shall use the proforma as per Annexure-VDL for furnishing complete list of vendor data and drawings. Listing of drawings shall be done engineering discipline wise, namely:
    a. Process (Including process P&ID's and others).
    b. Mechanical (including equipment Data sheets, P&ID's for auxiliary systems and others.
    c. Pressure vessels (Including vessel data sheets, fabrication drawings and others).Heat Exchangers (including exchanger data sheets, calculations fabrication drawings and others).
    d. Electrical (including data sheets and others).
    e. Instrumentation (Including data sheets and others).
    f. Structural.
    g. Inspection and test procedures
    h. Others (including all those drawings not covered above).

STATEMENT –I

VENDOR DATA BOOKS SHALL CONTAIN

1. Detailed specification of equipment.
2. Model, type of equipment shall be clearly marked.
3. Assembly and dismantling procedures with clearance and tolerance
4. It should indicate the manufacturers serial number
5. Safe limits of operation and maintenance.
6. Lubricants and fuel specification.
7. Clearly define the cathodic maintenance.
8. Safety precautions to be taken before any work is carried out.
9. Sectional drawings and exploded view for easy identification of parts.
10. Component parts catalogues of the package/train.
11. Pre-commissioning and commissioning checks.
12. List of special tools and test equipment needed for 1st overhaul
13. Shutdown logic and control sequence for regular shutdown and emergency stop.
14. As built drawings of the facility.

STATEMENT –II

THE OPERATIONAL MANUAL

1. Describe the Plant/Facility.
2. Describe and give summary of systems making and facility.
3. P&I Diagrams
4. Design Criteria
5. Operating range and set points.
6. Built-in safety service for the safe operation of equipment and personnel operating it.
7. Chart showing the lubricants to be used and their periodicity.
8. Periodic maintenance recommended by manufacturer.
9. Pre-commissioning and commissioning checks.
10. Control & Shutdown logic for planned shut down and emergency stop.
11. Overall safety system of utility and personnel working in facility.
12. Repair manual for over hauling.

13. All equipment data sheets.
14. Equipment cut view and maintenance operation Schedule to be placed inside Module and one set spare to be provided.

FUNCTIONAL SPECIFICATION

FOR

GAS TURBINE

PREPARED BY	REVIEWED BY	APPROVED BY	TOTAL No. OF PAGES	DATE	REV. No.
KS	NM	AJ	53	25.05.2018	3
KS	VBD	JSS	55	31.03.08	2
SRP	VBD	SKG	55	04.01.07	1
AKS	SKG	JSS	55	21.02.05	0

CONTENTS

1. INTRODUCTION
   - 1.1 Scope / General
   - 1.2 Contractor Responsibilities
   - 1.3 Experience / capability requirements

2. STANDARDS, CODES AND REFERENCE DOCUMENTS
   - 2.1 Codes, and Standard
   - 2.2 Reference Specifications

3. SCOPE OF SUPPLY
   - 3.1 General
   - 3.2 Scope of Supply
     - 3.2.1 Gas Turbine Driver
     - 3.2.2 Air intake and Turbine Exhaust System
     - 3.2.3 Waste heat recovery unit
     - 3.2.4 Fuel Gas Treatment System
     - 3.2.5 Turbine Cleaning and Washing System
     - 3.2.6 Acoustic Enclosure
     - 3.2.7 Electrical
     - 3.2.8 Controls and Instrumentation
     - 3.2.9 Lube Oil Air Cooled Heat Exchangers
     - 3.2.10 Miscellaneous
     - 3.2.11 Testing
     - 3.2.12 Installation, Pre-commissioning and Commissioning
     - 3.2.13 Spares
     - 3.2.14 Special tools

4. ENVIRONMENTAL DESIGN CRITERIA AND UTILITIES
   - 4.1 Climatic Conditions
   - 4.2 Design Life, Availability and Reliability
   - 4.3 Area Classification

5. DESIGN CRITERIA
   - 5.1 General
   - 5.2 Gas Turbine Performance
   - 5.3 Turbine Design
   - 5.4 Intake Air System
   - 5.5 Exhaust System

3

5.6 WHRU
5.7 Fuel System
5.8 Lube Oil System
5.9 Oil Coolers
5.10 Acoustic Enclosure and Ventilation
5.11 Mechanical Requirements
5.12 Materials
5.13 Welding
5.14 Piping
5.15 Electrical
5.16 Starting Motors
5.17 Instrumentation and Controls
5.18 Fire and Gas Detection
5.19 Fire Suppression
5.20 Insulation
5.21 Mounting Plates
5.22 Turbine Washing System

6. INSPECTION, TESTING AND CERTIFICATION
6.1 General
6.2 Quality Assurance
6.3 Shop Inspection and Testing
6.4 Material and Welding Inspection
6.5 Works Tests
6.5.1 Hydrostatic Tests
6.5.2 Unit Control Panel (UCP)
6.5.3 Mechanical Run Test
6.5.4 Performance Tests
6.5.5 String Test
6.5.6 Noise Test

7. SPARE PARTS & TOOLS
7.1 Spare Parts
7.2 Special Tools

8. CONTRACTOR DATA REQUIREMENTS
8.1 Documentation
8.2 Special Studies
8.3 Information after Order

9. PAINTING AND PREPARATION FOR SHIPMENT
- 9.1 Painting and Protective Coating
- 9.2 Preparation for Shipment

10 WARRANTY

ANNEXURE 1- Alarms and shut downs

ANNEXURE- GT Experience Record- Gas Turbine

1. INTRODUCTION

1.1 Scope / General

This specification covers the minimum requirements for the design, manufacture, supply, inspection and testing of Gas Turbine Drivers complete with all associated auxiliaries and controls.

This Specification should be read in conjunction with the Functional Specification for Process Gas Compressor and Functional specification for the Gas turbine Generator Specification. These Specifications respectively detail the package requirements for the Process Gas Compressor and Turbine Generator including their drives. This Specification is designed to supplement those specifications respectively.

1.2 Contractor Responsibilities

The Contractor shall be responsible for the complete design, manufacture, supply, inspection, testing, preparation for shipment for the Gas Turbine drives, including full compliance with all applicable design codes and standards, including those listed in Section 2 of this Specification.

1.3 Experience/ Capability requirements

Unless otherwise specified elsewhere, the Equipment Qualification Criteria (EQC) specified below shall be applied for acceptance of the offered gas turbine model.

Vendor shall be an established gas turbine manufacturer having adequate design engineering, manufacturing and testing facilities.

The gas turbine model offered shall be from the existing regular production range of the vendor, and the rating offered shall be based on internationally published rating.

Gas Turbine shall be identical with the parameters as specified in Annexure-GT compared to at least TWO UNITS produced tested and supplied by the vendor from proposed manufacturing plant for offshore platform installation. As a minimum ONE of the above gas turbines must have completed 8000 hours of trouble free operation at the specified operating conditions on offshore platform installation, prior to the dead line of submission of bids. The past reference indicated by the

3

vendor in the Annexure GT shall be for the same application for which the offered Gas Turbine will be used.

Proven Track Record

Gas Turbine vendor shall complete the Experience Record Pro-forma as enclosed in Annex-GT to amply prove that the Equipment offered meets the EQC for technical acceptance. Turbine vendor may furnish additional information to justify that the EQC is being met. In addition, manufacturer's catalogue and general reference list shall also be furnished along with the proposal. 3

2 STANDARDS, CODES AND REFERENCE DOCUMENTS

2.1 Codes, Standard

The Gas Turbine shall be designed, manufactured, certified and tested in accordance with the requirements of this Specification, referenced Functional specifications and the latest revision of the following codes, standards and statutory regulations:

• API RP 14C	Analysis, Design, Installation and Testing of Basic Surface Safety Systems on Offshore Production Platform.
• API RP 14F / 14 FZ	Design and Installation of Electrical Systems for Fixed and floating Offshore Platform facilities
• API RP 14G	Fire prevention and Control on Open Type Offshore Production Platforms.
• API RP 500 / 505	Classification of Areas for Electrical Installations at Drilling rigs and Production Platforms on Land and on Marine Fixed or Mobile Platforms.
• API 613	Special Purpose Gear Units for Refinery Services.
• API 614	Lubrication, Shaft Sealing and Control – Oil systems for Special Purpose Applications.
• API 616	Gas Turbines for Refinery Services.
• API 660	Heat Exchangers for General Refinery Services
• API 661	Air cooled Heat Exchangers for General Refinery Services

• API 670	Machinery protection system
• API 671	Special Purpose Couplings for Refinery Service
• ASME VIII DIV 1	Pressure Vessels and Boiler Code
• ASTM E – 94	Standard Guide for Radiographic Examination
• ASME B 16.5	Steel Piping Flange and Flanged Fittings
• ASME PTC 22	Performance Test Code for Power Turbines
• ASME B 31.3	Codes for Chemical Plant and Petroleum Refinery Piping.
• AGMA STD 421	Practice for High – Speed Helical and Herring Bone Gear Units.
• BS 6540 Part 1	Air filters used in air conditioning and general ventilation. Methods of test for atmospheric dust spot efficiency and synthetic dust weight arrestance.
• NACE MR 0175	Sulphide Stress Cracking Resistance Metallic Materials for Oilfield Equipment.
NFPA codes	National Fire Protection Association
PESO	Petroleum and Explosives Safety Organisation

3

2.2 Reference Specifications

The Gas Turbine Drivers covered by this Specification shall be designed, manufactured and tested in accordance with the requirements of the following Functional specifications, Design criteria and other documents:

3

SPEC NO	Description
Vol II	Description of work- Mechanical
Vol II	Mechanical design criteria
5002	Specification for noise limit
5004	Specification for equipment vibration
5100P	Specification for packaged equipment – Process platform
5102	Functional safety specification
5086F	Functional specification for rotary gear pump
5601	Functional specification for unfired pressure vessel
5701F	Functional specification for air cooled exchanger
5702F	Functional specification for shell and tube exchanger
VOL II	Electrical design criteria

3

FS 4017	Functional specification for electrical equipment of packaged plant
FS 4008	Functional specification for Electrical motors.
Vol II	Piping design criteria
2004-A	Functional specification for piping design
2004-B	Functional specification for piping fabrication and installation
2006	Functional Specification for insulation of piping and equipment insulation
2009F	Functional specification for welding and NDT
1060	Vendor data requirement
Vol-II	Basic bid work- Instrumentation
Vol-II	Instrument Design Criteria

3

3 SCOPE OF SUPPLY

3.1 General

Gas Turbine drives are required for gas Compression and Power generation for the offshore platform.

3.2 Scope of Supply

The Scope of supply shall at least include the following equipment and auxiliary systems. Any equipment that is required for safe operation and shutdown of the turbine drive but not specifically identified herein shall also be included in the Scope of supply.

3.2.1. Gas Turbine Driver

- Gas generator and power turbine and all associated equipment.
- Gas generator ancillary equipment including fuel system, lube and hydraulic oil console (if applicable) with all fittings, coolers and accessories as required, support system, instrumentation, starter system, ignition system, bleed valves and ducting etc.

3

3.2.2. Air intake and Turbine Exhaust System

- Turbine combustion air intake system shall be supplied complete with silencer, plenum chamber (where applicable) with door.
- Air filtration system complete including instrumentation, bird screen(s) filter assembly, expansion joints, flanged connections, ducting etc.
- Weather louvers, weather hood (if required by filter system manufacturer) 3
- Access to pre-filter in filter housing for inspection and replacement (whilst Turbine is running)
- Silencers and attenuation for air intake and turbine exhaust
- Expansion and support system for exhaust ducting
- Exhaust thermal insulation for personnel protection and cladding
- Exhaust main, dust collectors, ducts and junctions as flanged spool pieces complete with gaskets and bolting. (when WHRU is installed)

3.2.3 Waste heat recovery unit

Where ever mentioned in scope of work, the contractor shall co-ordinate with WHRU vendor and Gas Turbine vendor for design parameters required by respective vendors. 3

3.2.4. Dedicated secondary Fuel Gas Treatment System shall minimum include: 3

- Knock out pots
- Twin strainers,
- Fuel control valves
- (1 + 1) Super heater
- (1 + 1) Fuel gas filters coalescers

3.2.5. Turbine Cleaning and Washing System

- Detergent/water cleaning system(s) suitable for both “on-line” and “off-line” washing. In addition Demineralized water plant if required by Turbine vendor. 3

3.2.6. Acoustic Enclosure

- Acoustic enclosure for gas turbine (and gear box and driven equipment, if required)
- (2) x 100% Enclosure ventilation system including fans, silencers, filters, instrumentation and cables.

- Necessary enclosure lifting points or mono-rails to facilitate all maintenance lifts.
- Fire and gas detectors, including cabling and junction boxes.
- Fire detection and prevention system.
- Lighting within enclosure, including cables, switches and junction boxes.
- Enclosure emergency lighting.

3.2.7. Electrical

- All equipment within Contractor's package (eg. Motors, switch gear equipment for both AC/DC systems, lighting boxes) 3
- A battery and battery charger system to meet the DC requirements of the Turbine Package.
- DC /AC motor starters
- All cabling, junction boxes and terminal boxes within the Contractor's Package.
- Cable trays for power and control cables within Contractor's package
- Power and lighting within acoustic enclosures and air filter house including cables, terminals, junction boxes.
- Earthing connections for all equipment.
- Thyristor Panel for fuel gas conditioning. 3

3.2.8. Controls and Instrumentation

Controls and Instrumentation for Gas Turbines package shall be dedicated for each Gas Turbine package and shall be inclusive of the following as minimum:

1. Field Instrumentation.

   - Gauges. Gauges shall be provided for the service of pressure, differential pressure (dp), dp based flow elements, temperature, level, etc related to process/ utilities/ equipment. In place of gauges, independent indicators may be provided. 3
   - Transmitters. Transmitters shall be provided for the service of pressure, differential pressure (dp), flow, temperature, level, equipment parameters etc related to process/ utilities/ equipments facilities.
   - Switches. Switches shall be provided for the service of pressure, differential pressure (dp), flow, temperature, level, equipment parameters etc related to process/ utilities/ equipments facilities.
   - Fire, heat/ thermal, & gas detectors

- Final control elements like control valves, shutdown valves, etc
- Pressure relieving devices like safety valves, relief valves, safety relief valves, thermal relief valves.
- Specialized machine monitoring sensors inclusive of Vibration & Temperature sensors
- Local ESD & FSD push buttons

2. Integrated Control / Safety Instrumented system.
   - Each Gas turbine package shall be provided with dedicated integrated control/ safety instrumented system for the purpose of implementing controls, sequencing, optimisation, safety instrumented function for entire package inclusive of gas turbine, oil system and other auxiliaries and accessories. Main control/ safety instrumented system panel shall be called Unit Control Panel (UCP) and shall be housed in Control Room. If UCP placed in nearby SAFE area (LER) then RCP (Remote Control Panel)/ACP (Auxiliary Control Panel) shall be provided in the control room. 3
   - Beside UCP, Local Control Panel (LCP) / Local Gauge Board Panel shall also be provided.

3. Integration with the other Instrumentation systems of the platform. 3
   - Dedicated redundant Serial communication interface for each Gas turbine UCP with platform DCS/ICS (process control and monitoring system).
   - Hardwired interfaces for each Gas turbine UCP with platform safety instrumented systems, viz., platform ESD PLC, platform Fire & Gas detection system.

4. Miscellaneous.
   - Scope shall also include all hook-up works related to controls & instrumentation activities outlined in this specification and shall be inclusive of Junction Boxes, tubing / piping, tube trays, fittings, interconnecting cables, cable glands, plugs, cable trays, supports, MCTs, etc.

3.2.9. Lube Oil Cooler -Air Cooled Heat Exchangers

- Tube bundles / headers
- Low noise fans with guards
- Vibration switch

- Motors, transmissions
- Fan plenum
- Local gauges and package mounted instrumentation for protection and control.
- Package mounted junction boxes for instrumentation and power cabling.
- Flanged pipe work terminations easily accessible for hook-up.

3.2.10. **Miscellaneous**

- All engineering, documentation, liaison, project management and support to the Company required for the timely and effective supply of items under this specification. Documentation to include installation, operating and maintenance manuals, PESO and applicable ASME code certificates approved by the certifying agency. 3
- All associated interconnecting pipe work and valves required between components.
- All, Drains, vents, purge connections with associated termination valves for all equipment in Contractor's scope of supply. Vent and drain pipe work and isolating valves shall be brought to the package edge and all like drains shall be manifolded.
- Couplings, spacers and coupling guards as required.
- Necessary access platforms, ladders, walkways.
- Preservation and crating.
- Storage pod for Gas generator, if required, as per scope of work. 3
- All installation consumables
- Support stands for rotating elements for turbines.
- All transportation stands and containers, fixing, blanks, shopping fastenings and inhibitors etc. for 12 months storage.
- Documentation.
- Lifting frames with suitable attachment points for slings for each component required to be separately lifted or moved
- Trolley-mounted oil-transfer pumping system
- Trolley-mounted oil centrifuge
- Turbine washing system. 3

3.2.11. **Testing**

- (4) hour Mechanical run testing including accessories.
- Performance / Acceptance Testing at manufacturers works
- Systems Functional testing

- Integration testing along with driven equipment
- GG testing
- Noise testing

3.2.12. **Installation, Pre-commissioning and Commissioning**

- Fabrication site installation, erection, testing and pre-commissioning (including Supervision and Specialist Assistance from vendor)
- Offshore hook-up (including Supervision and Specialist Assistance from vendor)
- Supervisory services and specialist assistance from vendor during commissioning and testing.
- Commissioning procedures prepared in conjunction with the equipment manufacturers. 3

3.2.13. **Spares**

- Supply of all Start up and commissioning spares and consumables.
- Itemised Price List of spare parts recommended for one year's operation.

3.2.14. **Special tools**

- Two sets (when no. of units are two or more than two, otherwise only one set) of special tools, tackles, stands/cradles necessary for access, maintenance, removal and installation for GG, PT, starter motor etc. shall be provided. 3

- Vendor shall provide Boroscopic tools and related facilities. One boroscope and one portable emission meter shall be provided for each PGC module and one for GTG package/s. 3

4 ENVIRONMENTAL DESIGN CRITERIA AND UTILITIES

4.1 Climatic Conditions

The climatic and other conditions under which the Equipment will operate are detailed elsewhere in the bid. 3

The equipment will be operated on an offshore platform.

The Contractor is responsible for ensuring that all equipment and components provided are suitable for the utility and environmental conditions as specified during the entire design life.

4.2 Design Life, Availability and Reliability

Equipment shall be designed and constructed for continuous operation, outdoor and a minimum service life equal to the platform design life, specified elsewhere in the bid. 3

The Time between Overhauls shall be minimum 30,000 hours of operation at the maximum design conditions. The contractor shall provide details of the schedule maintenance, activities including overhauls, personnel requirements and parts requirements for all scheduled maintenance activities between Start (1st hour) and major overhaul (30,000 hours) of operation at the maximum design conditions. 3

The contractor shall be required to meet a specific minimum availability figure of 95% and submit an undertaking in this regard. The vendor shall specify the estimated availability figure for this package. In addition, the Contractor shall furnish its best estimates of Mean Time between Failures (MTBF) and Mean Time to Repair (MTTR) for the equipment concerned. 3

In making assessments of the availability and reliability, vendor will need to estimate maintenance and repair times. For the purpose of making such estimates, the vendors may assume that the spares holding is in accordance with its submitted recommendations unless otherwise stated. The vendors may also ignore any delay caused by factors not directly related to the package in question, unless a basis for estimating such delays is provided by the Company. In the case of failure modes that make a significant contribution to the overall unavailability, the vendors may be required to demonstrate that its assumed repair times can be achieved. 3

To facilitate the online preventative maintenance and calibration, the vendors shall provide necessary equipment to achieve the maximum online availability and minimum preventative maintenance down time. Duplex oil filters, test ports, block valves and drain lines for instruments and spaces for ease of maintenance access shall be incorporated in the design to achieve the online trouble shooting and maintenance of each instrument. All instruments, solenoid valves and safety relief valves, which require periodic preventative maintenance and calibration shall be located outside the gas turbine enclosure. Fuel gas supply to secondary fuel gas 3

conditioning skid shall have dedicated fuel gas pressure control system. Further, one more fuel gas control valve shall be provided as a part of Gas Turbine.

4.3 Area Classification

Electrical equipment shall be Suitable for the applicable Hazardous Area classification according to Electrical design criteria enclosed in the bid. Instrumentation equipment shall be suitable for the applicable Hazardous Area classification according to Instrument design criteria enclosed in the bid. 3

5 DESIGN CRITERIA

5.1 General

The contractor shall supply all equipment necessary to make a complete, operable, safe and dependable system including all the equipment and instrumentation necessary to make the unit operational.

The Contractor's data shall include detail design drawings of all major equipment and accessories. 3

All detail design drawings shall be fully dimensioned and complete with a bill of materials. All dimensions shall be in Metric units except for pressure which shall be in Kg/cm^2 (gauge) or (absolute).

Contractor shall use sound engineering judgment to complete an installation that will perform the required process function without compromising the safety and operability objectives specified for this project. The packages shall be designed in accordance with API RP 14C, 14G and 14F / 14 FZ.

Acceptable sound pressure levels for each item of Equipment shall be in accordance with those specified in Specification for noise (Spec. No. 5002). 3

5.2 Gas Turbine Performance

The vendor shall guarantee the performance of all the equipment in the overall Package.

Results of the shop performance tests will be compared with the guaranteed performance data submitted by the Contractor in its proposal. For Turbines,

deviations of the test results from the guaranteed performance shall be within the following limits:

- Gas turbine site rated power output (MW) Guaranteed -0.0%
- Gas turbine heat rate at rated output (KJ/KW-hr) Guaranteed +0.0%

5.3 Turbine Design

The gas turbine shall be designed in accordance with API 616 and as specified herein. Turbines may be industrial or aircraft-derivative types. Integral shaft simple-cycle units are preferred for Turbine Generation applications, however, "two-shaft" designs will also be considered.

Unless specified otherwise the continuous power generated at the output shafts shall be at least 105% of the maximum power required at the rated conditions of the Driven Equipment. Power ratings shall include all site and operating allowances such as inlet and exhaust losses, filter and vane fouling losses. 3

The design environmental conditions for determining maximum site rated turbine shaft brake power shall be 36.7˚C (98˚F) and Relative Humidity of 90%.

The purge period will be sufficient to displace at least 10 times the volume of the entire exhaust system including the stack.

The Turbine blade shall be suitable for the required operating conditions, site conditions, fuel and the required cleaning as specified herein. Blades shall be suitable for operation in a marine salt-laden environment. 3

Combustors and fuel nozzles shall be designed in accordance with the requirements given in Section 4.3 of API 616. Combustors and fuel nozzles shall be designed and calibrated to permit random exchange of new nozzles without the need for field calibration and adjustment of flow pressure drop.

The Contractor shall provide means for turning the equipment rotating elements for maintenance and/or alignment purposes. Details shall be provided in the operation manual. 3

Bearings and Bearing Housing:

The active thrust bearings for power turbine shall be tilting pad type. The inactive sides bearing can be tilted pad type/other proven type. Thrust bearings shall be selected at no more than 50 percent of the bearing manufacturer's load rating**.** At least two RTDs on the active side of thrust bearings-shall be provided. Inactive side shall have RTD as per the vendor standard design. They shall be embedded in the steel backing close to the Babbitt interface. 3

Two radial vibration probes in each bearing housing, at least two thrust proximity sensors at the thrust end and one event per revolution probe as per API 670 shall be provided.

Depending on the type of gas generator, vibration monitoring / protection shall be done by accelerometers or proximity probes.

Gears, Couplings and Guards

The gas turbine vendor shall furnish any gear required for starting and helper drivers, shaft driver auxiliary equipment, and when specified, any load gear.

The Load gears shall have rating (gear rated power) as a minimum equal to the potential maximum power of the gas turbine. For power generation service the load gear and generator load coupling shall be capable of withstanding the worst case of alternator fault conditions.

Coupling shall be balanced as per OEM standard procedure. 3

5.4 Intake Air System

Intake of air for the purpose of combustion/ventilation/ Pressurisation / etc. shall be from points located at least 10 feet (approx 3 M) away from the platform edge.

Turbine combustion air intake system shall be supplied complete with silencer, plenum chamber, filter assembly, expansion joints, flanged connections, ducting and the instrumentation & controls etc.

The minimization of corrosion in air intakes is of great importance. Materials of construction for air intake filter frames, silencer, ducting, plenums and hardware shall be manufactured from 316L SS or similar alternative materials capable of withstanding the corrosive saline marine environment in which they will operate.

Internals of silencer may be of polypropylene or similar alternative material having proven experience of offshore operation. 3

The air intake filter shall be designed for marine environment. Only proven Filtration systems for offshore installations will be acceptable.

The inlet air filtering and silencing systems will be heavy duty marine type three – stage filter with following features:

1st stage : Washable Media type prefilter / coalescer for maximum solids / salt dust removal and water coalescence.

2nd stage : High efficiency replaceable media type filter / coalescer to remove smaller particles/droplets passing through the 1st stage filter / coalescer. 3

3rd stage : Inertial vane separator bank, to remove water droplets retained in the air flow.

The Filter inlets shall be provided with stainless steel weather hood or louvers if required by filter system manufacturer and a heavy mesh wire bird screen. Construction shall be of continuous seam welded metal. Hardware that is located in the airflow path shall be positively locked. 3

The filter shall be oriented in such a way that no exhausts / vents etc. are re-circulated in to the gas turbine intake system.

The air inlet system shall be equipped with a differential pressure indicator and differential pressure switches (discrete or transmitter generated) for alarm and shutdown. Maximum differential pressure of air intake filter shall be specified by the manufacturer. The vendor shall demonstrate that the turbine is capable to run at 100% rated speed at full load with maximum differential pressure of suction filter (maximum differential pressure shall be artificially simulated). 3

The filter housing shall have adequate water traps and drains for the vane separators. 3

The Filter system shall be designed to meet the mandatory filtration standards prescribed by the Turbine manufacturer.

As a minimum the air intake system shall meet the following filtration requirements.

- Removal of 99% of particles of (5) microns and larger in size
- Average synthetic dust weight arrestor of 98% (As defined in BS 6540 part 1)
- Removal of sodium and potassium Chloride concentrations greater than 0.01 ppm (by weight) over the humidity range specified in the bid.

The first stage filter shall be designed to be replaceable or cleaned whilst the Turbine continues to operate. Turbine Air Intake filter manufacturer shall have proven track record for similar application. Air filter replacement period of 1st stage (washable type) shall be as per Filter OEM standard. Replacement period of 2nd stage (major) filter shall not be less than 6 months of continuous operation. One set of 1st stage Intake Air filter shall be provided as spare by the vendor for each turbine. 3

Vendor shall furnish performance curves (pressure loss/filtration efficiency vs flow) for each stage and overall and shall indicate expected pressure losses with filters clean and in dirty condition requiring washing or change out.

Hydrocarbon gas detectors shall be installed within air intake system. Detectors shall be located internally in low velocity areas.

5.5 Exhaust System

The Turbine exhaust shall preferably exit vertically through the turbine enclosure. The exhaust stacks shall be of suitable metallurgy and shall extend at least 5 meters above the inlet air system or 5 M above the coolers top, whichever is higher.

The exhausts shall be fitted with a silencer capable of reducing noise level to or below the permissible noise level limits stated elsewhere in the Bid.

A readily accessible differential pressure gauge and transmitter giving a reliable indication of exhaust backpressure shall be supplied and installed. (Only when WHRU is installed)

Exhaust location shall be chosen so as to preclude the possibility of exhaust ingestion at the combustion air inlet of any of the Platform equipment and shall be

located away from normal Helicopter flight paths, and crane cabins. Exits of exhausts shall be so designed that they prevent the ingress of monsoonal rainwater.

Contractor shall provide suitable drainage point on the base of ducting to allow drainage of any free water collected in the duct.

The turbine exhaust duct shall be adequately insulated to minimize heat contribution to other units and for personnel protection. Insulation shall be cladded by aluminium sheet of 22 gauge thickness**.** The surface temperature of cladding shall not exceed 60ºC at any point of time.

Suitable flexible connectors shall be included in each exhaust system to avoid transmission of mechanical loads between components.

Provision shall be provided for ease of lifting out of the exhaust stacks and it should not become an obstruction during engine replacement.

Emission sampling ports shall be provided in exhaust ducting. Access platform and ladder shall be provided.

Turbine combustion exhaust system shall be supplied complete with silencer, Plenum chamber, expansion joints, flanged connections, ducting etc. The splitters of the silencer shall be in Stainless Steel Construction.

The contractor shall ensure that all ductwork sections are gas tight.

5.6 Waste heat recovery unit (if there is project requirement)

The WHRU is in the scope of Contractor. The design parameters required by the gas Turbine vendor related to WHRU shall be provided by the Contractor. For further details refer to FS 5703. 3

5.7 Fuel System

Fuel system shall consist of the following sub-systems:

1. Gas Turbine Fuel System

Gas turbine fuel gas system shall be gas turbine vendor's standard proven system suitable for the fuel gas properties specified. This shall include necessary pressure

and temperature monitors/gauges, low fuel pressure switches (discrete or transmitter generated), a manifold and nozzles, fuel shut off valve (and vent valve) for actuation by emergency devices, a fuel governor valve for normal control purposes, and necessary instrumentations, control & safety devices. This system shall be totally skid mounted inside the gas turbine enclosure. 3

2. Fuel Gas Treatment System

A dedicated fuel gas treatment system shall be provided separately for each gas turbine by the turbine vendor. P & I D for this system shall be approved by the company. 3

The fuel gas treatment system shall be designed to deliver clean, dry gas to the turbine fuel system with the degree of superheat as recommended for the subject turbine/gas generator. However, as a minimum the super heat considered shall be 20°C above the water and or hydrocarbon dew point.

Fuel gas treatment system shall be console type and shall be mounted off skid.

This system shall be designed for ISO rating of the gas turbine or maximum potential power of gas turbine or to meet the turbine starting and acceleration requirements whichever is highest

This system shall include fuel gas heaters, dual fuel gas strainer and filters with differential pressure indication and alarm, turbine fuel control valves, twin knockout pots with demisters and traps to ensure removal of any condensate during start-up. Pots shall have level indicators, auto drain traps and high level alarm at the UCP. All components of the fuel system shall be fully accessible for maintenance.

Fuel gas strainer, filters and knock-out pots shall be individually provided with continuous flow transfer valves for change over during operations.

Superheated Process gas will be used for fuel gas. The contractor shall advise the required minimum temperature above the fuel gas dew point temperature and the maximum allowable temperature of the fuel gas.

All liquid/gas fuel piping and valves shall be in 316 L Stainless Steel or higher grade as required. All pressure vessels in fuel gas system shall be designed as per section VIII, Division 1 of the ASME code.

Entrance to the enclosure for the piping shall be by means of stuffing box to reduce the noise level.

The system start-up sequence shall include automatic draining of any hydrocarbon condensate from fuel gas filter, which shall close after draining of the liquid if any.

The following controls and safety shall be provided for the fuel gas treatment skid:

a) The skid shall be provided with automatic shut down valves at inlet & outlet of the skid and a vent valve connected to flare.

b) For all gas turbine shut downs :
   - Fuel gas supply to the turbine shall be shut off and the trapped gas within the treatment skid as well as in the piping between the skid and turbine shall be vented out.
   - Thyrister panel output shall be zero.
   - Heater electric supply shall be cut off.

c) High/High-High fuel gas temperature alarms shall be provided along with heater supply cut off at high-high fuel gas temperature alarm.

d) Heater skin temperature high alarm shall be provided.

e) Contactors shall be heavy duty. (AC-3 duty or higher)

3. **A Fuel Bypass Valve (if required) and Vent Valve** for purging the fuel gas line prior to light off shall be provided. 3

4. **Fuel gas compression system**:

If the fuel gas pressure required by the vendor is higher than that available, a fuel gas compression system will be furnished by the vendor/Contractor. Contractor shall submit complete details of such compression system. The reliability and availability of fuel gas compressor system shall be equal or higher than that of the Gas Turbine. 3

5.8 Lube Oil System

The turbine lubrication oil system will be designed and manufactured in accordance with API 614 and as specified herein. Preferably the Lubrication oil system will be integrated with the driven equipment (PGC, gearbox, Electric generator) oil system where applicable.

Where synthetic lubricants are required, the lube oil system for the Turbine shall be separate system independent of the driven equipment lubrication oil system.

The lubricating oil system shall be provided complete with one duplex filter with a changeover valve that allows 100% continuous flow during normal and change of filter operations. The filters shall be capable of removing 95% of particles 10 microns and larger. Clean filter pressure drop shall not exceed 0.35 kg/cm^2 at normal operating temperature and flow.

If required, for easy starting a lube oil heater shall be provided, interlocked with a low oil level switch and thermostat.

All pumps, piping, valves, fittings drains, control valves, vents, cooling, instrumentation and/or controls for the lube oil system shall be supplied.

The lube oil system shall be equipped with AC motor/ Gas Turbine driven main oil pumps capable of meeting 100% of the system oil circulation requirements. Auxiliary Lube oil pump is AC motor driven and the capacity of the pump shall fulfill the requirement of all equipment (as defined by individual OEM). In addition the lube oil system shall be provided with a DC motor driven emergency oil pump designed to protect the Turbine bearings during coast down and bearing cooling after a trip or emergency shut down. However in case of failure of auxiliary AC lube oil pump during normal shutdown/trip of the train, DC pump shall also start. 3

Run down tank, if required shall be provided by the vendor. 3

Turbine control system shall have provisions to :

(i) Monitor DC pump performance at every turbine start, and periodically thereafter (once in 12 hrs)

(ii) Continuously monitor DC supply system circuit for system availability during turbine operation

Unsatisfactory pump performance or DC system circuit condition shall be enunciated and shall trip the turbine.

The oil reservoir tanks shall be manufactured from 316L Stainless Steel or CS with proven internal coating like Brayco 785. 3

All lube oil piping, and related accessories shall be manufactured from 316L SS materials. Also, valve trims shall preferably of SS 316L. 3

Lube oil vents shall be supplied and routed to high safe areas (preferably up the Turbine enclosure exhaust stack), outside enclosures. The Fill connection shall be raised above tank top and be fitted with 20 mesh (SS 316 L) screen. 3

All Turbine lube-oil vents shall be fitted with oil coalescers and flame arresters. The coalescers shall eliminate 100% of all oil particles greater than 3 microns in diameter and at least 99% of all particles 3 microns or less in diameter. Oil return lines to reservoirs shall be provided. 3

5.9 **Oil Coolers**

Lube Oil coolers shall be air Cooled and shall be supplied and manufactured according to the requirements API 614 and the functional specification no. 5701F for Air Cooled Heat Exchangers. 3

The cooler tubes shall be stainless steel 316L. The header boxes shall be made of hardened stainless steel plate. The header plug shall be selected to prevent galling. 3

The oil cooler shall be equipped with temperature-controlled bypass valves and sized for a minimum temperature approach of 14 deg.C to the maximum ambient air temperature as indicated elsewhere in the bid document. 3

The fans of oil coolers shall operate with sparing philosophy i.e. one working and one standby (1+1). Cooling area shall be 200 % of the required surface area.

Electronic vibration switches shall be provided for each fan and shall alarm on high vibration.

Each cooler shall be designed for 110 % of cooling capacity.

ASME Code stamp is required on all coolers.

Cooler fans shall be electric motor driven directly or through a gear box (V Belt drives are not acceptable). Flexible metallic couplings shall be used for coupling motor with gear box.

Equipment furnished for Air-cooled exchangers shall include, but not limited to:

- Coolers with fans and guards, electrical motor drivers and gear-reducer (minimum service factor 2 as per AGMA). 3

- Vibration cutout switches.
- Access platform and ladders.

Fans shall be fitted with vibration monitoring accelerometers which shall be cabled down to a readily accessible junction box to enable connection of vibration measuring equipment. Contractor shall connect the same to the Vibration monitoring system with the vendor supplied cables / vendor specified cables. 3

Access ways, platform and ladders shall be provided to enable operational and maintenance activities to be carried out safely. Particular consideration shall be given to provide permanent access to permit the rodding of tubes (from either end), accessing motor drives, gear drives, fan bearings, upper fan enclosure, fan hubs, instruments etc. 3

Size and thickness of tubes, maximum number of fins per inch shall be as per relevant applicable functional specification and API code.

Motors shall be in accordance with functional specification of electrical motors, suitable for area classification.

Provisions shall be made in the Cooler design to facilitate ease of cleaning of the cooler.

The orientation of the oil coolers shall be horizontal with forces draft air flow in upwards direction. Clear space under the cooler (free of piping) shall be provided for maintenance and removal of Gear-box etc. 3

5.10 Acoustic Enclosure and Ventilation

The gas turbine driver (and gearbox if necessary) shall be enclosed in a weather proof, sound attenuating housing. The enclosure shall be constructed with materials that are fire resistant. Aspects of the Lube Oil System requiring routine maintenance shall be housed preferably outside the enclosure. 3

The enclosure shall be designed to reduce sound pressure levels to or below, the specified noise level limits. Sound attenuating devices shall be provided at the enclosure inlet and exhaust openings to ensure that overall project target noise levels defined elsewhere in the bid are not exceeded. All other enclosure penetrations shall be flashed with effective acoustically designed devices. These shall be easily removable to facilitate package installation, commissioning and

maintenance. Enclosure shall be constructed of easily handled sections to facilitate maintenance of and removal of the gas generator and power turbine.

The enclosure shall be fully welded steel construction lined with fire resistant acoustic insulating material. Convenient maintenance access shall be provided from the sides with removable panels fitted with lifting devices and removable doors. Asbestos materials shall not be used**.** Turbine enclosures to have glass window. Emergency push buttons shall be supplied near enclosure. 3

Enclosures shall have facilities like Monorails / Chain pulley Blocks etc. for maintenance / removal of GG / PT etc. These facilities shall be integrated with the module material handling facilities.

Ventilation exhaust shall be taken from the roof of the acoustic enclosure into silencer then out through the roof of the shelter and will be left at a level higher than the top of gas coolers. Provision shall be made for removal of rain water which might get collected inside the ventilation exhaust duct.

Enclosure ventilation shall be by 2 x 100%, explosion proof electric motor-driven fans, designed to preclude build-up, of a hazardous atmosphere and to provide pressurization (Positive/ Negative, as specified) of the enclosure.

Each fan shall be sized for at least 125% of design flow rate required to keep enclosure temperature below 60°C. With only one fan operating the turbine enclosure shall be maintained at a differential pressure of at lest 5 mm H_2O from the environment outside the enclosure (Positive (+) for the case of process gas compressor driver enclosure and negative (-) for the case of Generator driver enclosure).

Vendor shall furnish a typical calculations for heat rejection by turbine and equipments inside the enclosure, heat transfer to ventilation air, expected pressure drops in the entire ventilation path, fan sizing etc. 3

The system shall be equipped with automatic fan change over and with the necessary fire dampers that have single acting actuators. Actuators shall be fitted with feedback switches. The Ventilation air shall be filtered to the same standards as the turbine combustion air. Each fan shall be provided with electric motor/pneumatic operated dampers located downstream of the fan and an exhaust silencer downstream of the fan. 3

The fan may be arranged in parallel or series. 3

Materials of construction for air intake filter frames, silencer, ducting, plenums and hardware for ventilation air shall be manufactured from 316L SS or superior material capable of withstanding the corrosive saline marine environment in which they will operate.

The enclosure shall be equipped with all the necessary safety systems, including H_2S and Hydrocarbon gas detectors, flame monitoring and a fire extinguishing system. Refer to clause 5.18. 3

Lighting including emergency lighting shall be provided in the enclosure. Light switches and junction boxes shall be located outside the enclosure.

5.11 Mechanical Requirements

Assembled rotating elements assembly shall be multi-plane dynamically balanced.

Access to the turbine and associated auxiliary equipment on the skids for operation, maintenance, etc. is of utmost importance. Access to pumps should be adequate for daily checks of vibration, seal/packing leakage, lubrication, etc. and for easy removal for maintenance.

All equipment, such as filters and other components that require on-line maintenance, shall be clearly identified and located in accessible positions. Removal of other piping or equipment to provide access to maintain equipment is not acceptable.

The Contractor shall include all lifting points and monorails necessary for handling maintenance lifts. A trolley and hoisting system certified for the design loads shall be provided to enable the turbine (and gearbox if applicable) to be removed and set outside of the enclosure.

The minimum overhead clearance for piping shall be 2.2 m (including any insulation). Refer to mechanical design criteria for detailed clearance requirements.

5.12 Materials

Materials of construction shall be selected to suit the fluid medium with which it is in contact and shall be suitable for offshore service. The Contractor shall identify

each component part and the proposed material, including minimum corrosion allowances etc.

Materials exposed to the fuel gas are to be considered sour as defined by NACE MR 0175 and shall conform to the requirements of that standard.

No asbestos or asbestos-based products shall be used.

5.13 Welding

All welding shall be the responsibility of the Contractor and shall be in accordance with the appropriate Codes and Specifications as follows:

- Piping ASME B31.3 and ASME section IX
- Packaged equipment/Exchangers ASME VIII DIV I and ASME IX
- American Welding Society Code or equivalent standard.
- Functional specification for welding and NDT(Spec. No. 2009F)

3

Each weld procedure shall be covered by a suitable procedure qualification tested in accordance with the requirements of ASME IX.

5.14 Piping

All inlet and outlet piping shall terminate at the Package edge with an appropriately rated flange and Tie in pipe support.

All piping shall be in accordance with the following Functional specifications for design, material, fabrication and installation:

- Functional spec. 2004A : Functional specification for Piping design
- Functional spec. 2004B : Functional Specification For Piping Fabrication And Installation

However, vendor specification may be considered for piping within the skid.

3

Piping shall be arranged in such a manner as to avoid tripping or overhead problems. Piping or tubing of insufficient mechanical strength for standing on or hanging from shall be protected from personnel traffic. All piping and tubing shall be adequately supported.

Valves shall be installed as necessary to bypass and allow removal of duplicated components for maintenance without shutting down or draining the complete system.

Equipment shall be oriented within the Package to allow as much space as possible between pieces of equipment to facilitate maintenance. Adequate space shall be allowed for access to and maintenance of package components without removing any major assembly.

5.15 Electrical

Electrical work and equipment shall conform to the requirements of Functional specification for Electrical Equipment of packaged Plant FS 4017.

Electric motors shall be totally enclosed fan cooled. The contractor shall submit completed copies of the Data Sheets for the motors supplied under this contract and advise power requirements of each electric motor by KW and Ampere rating.

Pump drive motors shall have power ratings at least equal to 110% of the maximum pump power ratings.

AC and DC Electric motor starters will be furnished by the Contractor and mounted in the Switchgear Room. Control switches for each motor control shall be designed and provided by the Contractor.

The Contractor shall supply a battery and charger system(s) to meet the DC requirements of the Turbine Package. The batteries shall be located remotely in the Battery Room.

Motor cable boxes and connection junction boxes are required and shall be located such that they are outside enclosures and accessible from the package edge.

All electrical cable trays shall be of fiber glass or stainless steel material. 3

Provision shall be there to manually start/stop each motor. 3

Three phase 4 wire receptacles with plugs shall be provided at suitable locations to facilitate maintenance work, such that any point on the skid can be reached using a 15m connection cord and also near all equipments for which local starters are provided.

5.16 **Starting Motors**

Turbines shall be started using an AC electric motor drive using the turbine manufacturer's preferred motor starting system. Starting system shall be fully automatic and included in the equipment package start-up control system.

The starter motor rating shall be suitable for continuous use during crank soak washing operation. Details of required turning gear if any, shall be provided. The UCP shall have control for manual cranking and run-up without firing. 3

5.17 **Instrumentation**

5.17.1. **General**

The term Instrumentation shall mean Instruments, Control system & safety instrumented system along with the applicable utilities, hook-up materials related to Gas turbine package. Instrumentation shall primarily be designed as per the requirements of API-Standard-616, latest revision.

Each Gas turbine equipment package shall be provided with dedicated Instrumentation and shall be based on Programmable Logic Controller (PLC). As this PLC shall implement all starting/ normal operation/ control/ optimizing/ controls, (safety) shutdown, sequencing, it shall be certified SIL 2 as minimum to IEC standard 61508/61511. 3

The Instrumentation system shall provide for start up of the complete package, provide for stable operation/ monitoring/ optimization of the package, warn of abnormal conditions, and provide for shutdown of the package.

Instrumentation system for each Gas turbine equipment package shall be inclusive of the following components:

- Field instrumentation and local control panels.
- Integrated control/ safety instrumented system
- Provision of integration with the other Instrumentation systems of the platform i.e. platform ESD/FSD/DCS. 3
- Miscellaneous items inclusive of cables, JB's, tubing, installation materials, proprietary cables and connectors, cable trays, Hook-up materials, Laptops etc.

Machine protection/ monitoring system shall comply with the requirements of API 670, API 613, API 616 & API 617 standards. Also refer Annexure-1 of this specification for specific requirements of machine protection/ monitoring system. Machine protection/ monitoring system shall be latest with proven track record. Machine protection/ monitoring system shall be inclusive of field sensors, signal conditioner and monitor system. 3

Machine protection/ monitoring system of all the trains of gas turbine compressors shall be interfaced to a Supervisory computer system for operator monitoring purpose and shall provides all displays, viz., real time machine graphics, real time machine variables trending, steady state and transient state dynamic data response monitoring, machine protection/ monitoring system diagnostics display. Supervisory computer system shall allow the automating of predictive maintenance and diagnostic messaging for maintaining gas turbine compressors. All necessary as well as optional software packages shall be provided for meeting the functional requirements as stated above and implementing the same in supervisory computer server/ workstation. 3

Each train shall have monitor rack with back plane electronics and communication processor along with interconnecting cables. All the communication processors of each train shall be connected to the Supervisory computer system and Laser-jet printer. Supervisory Computer server/ workstation as minimum shall have latest available configuration with proven track record and size of TFT/LCD video display unit shall be 21”. All necessary software inclusive of Operating system/ Drivers/ etc shall be provided along with the system. 3

Instrumentation shall basically be designed as per the technical requirements as indicated in Basic bid work- Instrumentation, Vol-II of the bid package. 3

5.17.2. **Start-up and Shutdown sequencing/ interlocks- Functional requirements**

Instrumentation for each package shall be designed for both Local as well as Remote (Control Room) start-up and shutdown.

Instrumentation shall be designed for fully automatic start, shutdown & normal operation of the package. Fully automatic start operation shall be effected by means of One push-buttons actions as described below: 3

- On pressing the button the system shall sequentially commission the auxiliaries, purge / warm-up/ prepare the package and driven equipment for

starting sequence. Completion of these activities will initiate the complete starting and loading sequence.

- The desired operation shall require no further operator action during any system pressurization and bringing the Equipment train up to full load.

The start-up logic shall ensure that all permissive-to-start signals are satisfied inclusive of external process / utility permissive-to-start signals before the commencement of starting logic sequencing.

Following minimum shutdown provisions shall be provided for each package:

- Remote shutdown signal from platform ESD PLC system
- Stop push button at all package control panels
- Emergency stop button within turbine enclosure
- Package safety interlocks
- Watchdog timer

On initiation of shutdown signal package shall be brought safely to stop with all valves in failsafe mode. “Crash stops” shall be designed to stop the Train in the shortest possible time without jeopardizing safety.

The Vendor/ Contractor shall be responsible for developing all logics for the package and shall be inclusive of start, normal operation, shutdown logics / sequencing. Shut down sequence logic shall include all shut down scenarios viz. Normal control shut downs, emergency shut downs. All these logics shall be included in the proposal for review by the Company.

Minimum requirements for Alarm and shutdown shall be as indicated in Annexure - 1. These alarms and shutdown shall be appropriately indicated on local/remote control panels specified in Package equipments like PGC and GTG packages.

5.17.3. Field Instrumentation

Field instrumentation shall be inclusive of gauges, transmitters, switches, analyzers & analyzer systems, fire/ thermal/ gas detectors, final control elements like control valves/ shutdown valves, pressure relieving devices like safety valves/ relief valves/ safety relief valves/ thermal relief valves, specialized machine monitoring sensors, local ESD / FSD push buttons, etc.

Except for local-field mounted gauges & pressure relieving devices, all field instruments shall be connected suitably to integrated control/ safety instrumented system of the package to meet the functional requirements of this specification.

Field instruments shall be provided as the requirements specified in Basic bid work-Instrumentation, Vol-II of the bid package. 3

5.17.4. **Integrated Control/ Safety Instrumented System**

Each Gas turbine package shall be provided with its dedicated UCP for control and safety instrumented system. This dedicated control/ safety instrumented system shall be Programmable Logic Controller (PLC) based. Following shall be the main components of the system: 3

- Unit Control Panel with HMI
- Local Control Panel with panel mounted HMI
- Local Gauge Board Panel/ Local Oil system gauge board panel/HMI screen 3

Unit Control Panel (UCP)

UCP shall be PLC based and shall be housed in Control Room (or in the building module i.e. in the Local Equipment Room (LER) or near switchgear room) which is a safe area. Also refer Basic bid work- Instrumentation, Vol-II, of the bid package. UCP shall implement all the package related start/ normal operation/ control/ optimizing/ (safety) shutdown, sequencing functions. UCP shall implement/ meet the following requirements: 3

- Main PLC shall be provided as per the requirements as indicated in Functional specification for Programmable logic controller, Spec no. C101 attached elsewhere in the bid package. PLC shall implement all the necessary interlocks related to package operation, start, stop, etc sequencing & safety.
- Machine monitoring system inclusive of vibration, axial & temperature monitoring sensor related monitoring system etc.
- Other controllers required for the functioning of the package.
- Fire & Gas detection system cards, provision of interfacing with Fire suppression system/ other platform system as indicated elsewhere in the bid package.
- High-integrity back-up shutdown system, with hard-wired interfaces to the platform ESD and Fire & Gas system.
- Operator interface shall be through 17/15 inch LCD/ TFT based monitor with touch screen facility & keyboard/ mouse for monitoring and control 3

of the package. Operator interface shall have all the necessary graphics to supervise package operation. It shall also implement/ have comprehensive Alarm & Events logging/ events management system for the package, hardwired switches, push-buttons and indicators for critical functions inclusive of start-up, shutdown, mode selection, general and critical common alarms, etc.

- Condition monitors shall store package equipment status and allow the history of the machines to be viewed for diagnostics, particularly after a trip.
- Alarm annunciation shall be first-out type and shall follow F3A sequence of ISA-S-18.1.
- Test bypasses to allow on-line testing of protective functions

Contractor shall provide a laptop PC for programming and maintenance of UCP/ LCP, complete with all required software, hardware and all accessories inclusive of cables, adapters, carrying case, etc to permit up-loading and down-loading of data and programs to the UCP/ LCP. Contractor shall supply two copies on DVD/SSD of complete system software at FAT and at the conclusion of site acceptance test. Laptop shall be of ultra-light weight, and be provided with latest available configuration and proven track record. All software shall be provided with evergreen licenses. 3

Local Control Panel

Local Control Panel shall only have provisions for initiating start & stop sequencing in conjunction with UCP. It shall have the following:

- Indicators: Minimum indicators shall be provided for- Ready, Preparation Start in Progress, Lube Oil Established, Preparation Start Complete, Engine Start Progress, Gas Fuel On, Power Turbine Running, Gas Producer above Idling, All Auxiliaries Healthy, Control Mode Local/ Remote.
- Push buttons: Minimum push buttons shall be provided for- Acknowledge, Reset, Lamp Test, Start, Normal Stop, Ventilated Shutdown, Emergency Shutdown.
- Selector switches: Minimum Selector switches shall be provided for Test Crank On / Off, NGP Decrease / Increase.
- LCD/TFT monitor. It shall be possible to view current alarms & events on the monitor. Other displays like machine overview, auxiliary status, etc. Displays shall be selectable by scroll push button mounted on the local control panel or touch screen. 3

Local Gauge Board Panel/ Local Oil system gauge board panel

Separate local gauge board panel shall be provided for Oil system and driven system. Gauges of all the necessary process equipment parameters shall be installed in the respective panels.

5.17.5. **Provision of integration with the other Instrumentation systems of the platform**

Operation monitoring of Gas turbine package shall be from Process control & monitoring system of the platform. Also, to meet the safety requirements of the entire platform, Gas turbine package shall be suitably interfaced with the platform ESD system and Fire & Gas detection system. In order to meet the above-mentioned requirements following integration of Gas turbine package "Integrated control /safety instrumented system" with the platform systems are envisaged:

- Serial interface with platform process monitoring and control system,
- Hardwired interfaces with platform ESD PLC system
- Hardwired interfaces with platform Fire & Gas detection system
- All interfaces related to package shutdown shall be hardwired interfaces only

Refer Basic bid work- Instrumentation, of the bid package, Vol-II for more specific requirement of interfaces.

3

5.17.6. **Miscellaneous items inclusive of Hook-up materials**

All the installation, hook-up, testing, pre-commissioning, etc works related to Instrumentation activities as indicated in Clause number. 5.17 of this spec shall be in contractor's/ vendor's scope. Following minimum requirements shall be met:

- Scope shall be inclusive of Junction boxes, tubing/ piping, tube trays, fittings/ miniature valves/ manifolds, interconnecting cables, cable glands, plugs, cable trays, supports, MCT, etc.
- Junction boxes for cabling to control room panels/ cabinets shall be package edge mounted and shall facilitate ease in operation & maintenance operations.
- Detailed package layout coordination is required such that the final package layout allows satisfactory access for the maintenance and inspection of all instruments and controls.

- All instrumentation and controls shall be suitable for the cabling distances required.
- Support for Instrumentation is required for at least 7 years after the end of the warranty period. The Contractor shall provide the details of commitment by vendors for complete package Instrumentation system. 3

5.18 **Fire & Gas detection system**

A dedicated fire & gas detection system for each gas turbine package shall be provided as the part of UCP. Fire and gas detection system shall primarily be designed as per the requirements of Functional specification for fire and gas detection system, Spec No. 3500. However, following requirements shall also be met: 3

Fire & Gas detection system components shall be type approved by UL and/ or FM or LR. F&G detectors inside the GT enclosure shall be directly connected to the dedicated F&G system for the package in the UCP. FSD and ESD signals shall be made available in form of Volt free contact outputs for connecting to Main platform F&G and ESD system. 3

5.18.1. **Fire Detection**

Following methods shall be utilized for detection of fire/ manifestation of fire:

1. Flame detectors- UV and UV-IR detectors or MIR (Triple IR).
2. Thermal detectors.
3. Fusible plugs. 3

Flame & thermal detectors shall be installed as per the requirements of NFPA 72E, API-RP-14G. Fusible plugs shall be installed as per the requirements of API-RP-14C. All detectors shall meet the technical / functional requirements of relevant NPFA / ISA / API codes/ standards/ recommended practices/ technical reports.

On activation of flame detectors in the gas turbine package module/ shelter signaling confirmed fire shall lead to platform Fire Shutdown (main/ upper deck) accompanied with audible/ light flashing alarm in local area as well as in the control room.

On activation of flame / thermal detectors inside the gas turbine enclosure signaling confirmed fire shall lead to total Fire Shutdown of the platform. Unit/ package fire 3

shutdown shall bring the package to failsafe shutdown condition inclusive of its ventilation system and shall also lead to the release of respective fire suppressant.

A pressurized Fire Shutdown (FSD) Loop with fusible plugs and manually operated valves shall be provided covering entire gas turbine package. Manually operated valves shall be located strategically all over the package wherever emergency shutdown (ESD) manually operated valves are installed. The FSD loop shall be terminated at the package battery limit from where it will be connected to the platform FSD loop by the contractor. Depressurization of FSD loop shall lead to platform FSD. 3

A pressurized ESD loop with manually operated valves shall be provided covering entire gas turbine package. Manually operated valves shall be located strategically all over the package as per the requirements of API-RP-14C. The ESD loop shall be terminated at the package battery limit from where it will be connected to the platform ESD loop by the contractor. Depressurization of ESD loop shall lead to platform ESD.

5.18.2. **Gas Detection**

Following gas detectors shall be provided:

1. IR type HC gas detectors
2. Toxic gas detectors 3

Combustible gas detectors shall be inclusive of Hydrocarbon and Hydrogen gas (if required) detectors. Hydrocarbon detectors shall be IR technology based and Hydrogen detectors shall be catalytic type. Combustible gas detectors shall cover the entire combustible gas processing area and potential combustible gas release points. Installation shall meet the requirements of API-RP-14C. All detectors shall meet the technical / functional requirements of relevant NFPA / ISA / API codes/ standards/ recommended practices/ technical reports. 3

Toxic gas detectors shall be inclusive of Hydrogen sulphide (H_2S) as detectors. H_2S detectors shall be based on Electrochemical cell technology. H_2S detectors shall cover the entire H_2S gas handling area and potential H_2S gas release points. Installation shall meet the requirements of API-RP-14C. All detectors shall meet the technical / functional requirements of relevant NFPA / ISA / API codes/ standards/ recommended practices/ technical reports.

Following requirements shall also be met:

1. Inside the combustion air intake system. Gas detectors shall be located in the low velocity area of the intake system and shall meet the performance requirements under the velocity conditions of combustion air intake system.

2. For each ventilated space, gas detectors shall be provided such that:

   – Where the air is exhausted at a number of points, from one area and drawn through a common ducting, each specific air flow point shall be individually covered by the gas detectors. Gas detectors shall be located within the ducting, and in the air lock lobby, if any.

   – Where the air is exhausted via louvers on outside walls, gas detectors shall be positioned inside the module and adjacent to the louvers.

On activation of gas detectors in the gas turbine package module/ shelter signaling confirmed gas release shall lead to platform ESD accompanied with audible/ light flashing alarm in local area as well as in the control room.

On activation of gas detectors inside the gas turbine enclosure signaling confirmed gas release shall lead to only (affected) unit/ package Shutdown. Unit/ package fire shutdown shall bring the package to failsafe shutdown condition.

Inside gas turbine enclosure Fire & Gas detection system shall also meet the following requirements:

1. All fire & gas detectors shall be terminated directly to the dedicated logic solver/ PLC.

2. It shall be possible to do maintenance activities like calibration of detectors by a single person without forcing the input configuration at the logic solver end and without affecting the operation of rest of the fire & gas detection system.

3. Other requirements as indicated in Clause no. 5.17 of this specification shall also be met.

5.19 Fire Suppression

The Turbine enclosure shall have dedicated Fire & Gas detection system (Refer 5.18) and fire extinguishing system. The method of Fire Extinguishing is by CO_2 / Clean agent flooding, designed as per NFPA. The Fire suppression system shall consist of an automatic release of CO2 or Clean agent extinguishing agent inside turbine enclosure. Cylinders supplied for the CO2 or clean agent extinguishing agent shall be PESO approved for refilling in India. Fire suppression system for an area shall be designed so that it can be activated automatically by receiving a signal from any of the two different type of fire detection instruments located in that area i.e. U.V. light detectors and thermal detectors. The fire suppression system shall also be manually activated by an operator in the event of a signal from any of the devices. Each area protected by CO2/Clean agent system shall have adequate primary source and 100 percent back up supply manifolded together. The extinguishing system shall provide high speed release of CO2/Clean agent based on the concept of local flooding. A suitable time-delay sound and flashing red light alarm shall be provided before the release of CO2/Clean agent. 3

Passive fire protection measures shall be as per the requirements of Functional safety specification (Spec. No. 5102) and shall be incorporated into the Gas turbine Package design. 3

The package shall be designed with fire and gas protection inside enclosure, together with all equipment, cable, junction boxes etc. to allow for platform instrumentation system for full monitoring, protection and detection.

5.20 Insulation

The Contractor shall provide personnel protection for those parts on external equipment surfaces that can reach temperatures more than 71˚C as per API 14C.

All equipment, vessels and piping that require insulation, shall be insulated in accordance with Functional specification for Insulation of Piping and equipment spec. no. 2006.

5.21 Mounting Plates

Turbines and driven Equipment shall be packaged with oil drain pans and bottom sound dampening closing plate (where required) for multi-point support on the platform deck. Depending on the Manufacturer's recommendations, Turbines and Driven Equipment may be mounted on individual sub-bases that are assembled onto a structural steel floor deck that is designed to rest directly on the platform deck 3

girders. Options of providing a three (3) point base plate with anti-vibration mounts should be evaluated and selected based on the proven design and cost economic advantage.

Base plates shall be designed to prevent any platform movement from affecting the machine alignment. The deflection of complete bases due to all static loads shall not be detrimental to the equipment during transit or when operating.

The Contractor shall provide drains within the base plates and these shall be piped to the package edge. In accordance with the design code the Contractor shall provide calculations showing the Safe Working Load of all lifting points. 3

The minimum design and structural requirements for packages shall be in accordance with the Functional specification for Packaged Equipment-5100P.

The Contractor shall provide the necessary data required for structural dynamic and static analysis of the deck support steel. This information shall include but not be limited to the following:

- Package weights and centre of gravity at operating condition
- Operating speeds for all rotating pieces of equipment.

The Contractor shall submit a set of preliminary drawings for proposed package with its Tender. The drawings shall display anticipated package dimensions, weights, general item layouts and interconnection orientations.

Where required the Contractor shall furnish anti-vibration mounts.

5.22 Turbine Washing System

The Contractor shall propose and include a crank detergent/water wash “off-line” and an “on-line” wash cleaning system for the gas turbine.

Potable water/DM water shall be used for washing water and instrument air shall be used for tank pressurization. Alternatively, electric motor driven pump may be used. 3

All necessary equipment, controls and accessories required for washing operations shall be included. Items such as tanks and fittings etc. shall be manufactured from 316 S/S. 3

The washing system shall be described in detail together with details of an effective program that utilizes a combination of both "off-line" and an "on-line" method of washing capable of meeting this requirement. Details of the proposed method and frequency of wash shall be included in the description. 3

6 INSPECTION, TESTING AND CERTIFICATION

6.1 General

The overall responsibility for inspection and testing rests with the Contractor. The Company reserves the right to witness any manufacturing operation, assembly or testing of the Turbine within the manufacturer's plant and review any audits and reports for the subject work. 3

6.2 Quality Assurance

The vendor shall demonstrate that they operate a quality system in accordance with an acceptable international standard. 3

The vendor shall submit a quality control plan for Company review. The vendor shall provide facilities for and cooperate with Company and statutory authority inspectors during manufacturing assembly and testing. 3

6.3 Shop Inspection and Testing

All of the Turbine and ancillary equipment shall be completely assembled and "function tested" at the Contractor's shop in accordance with these specifications.

The Contractor shall submit for review and approval by the Company a comprehensive inspection and Test Plan (ITP) covering all relevant components, completed equipment and systems. No work by the Contractor or its Sub-Contractors may commence without prior approval by the Company of the ITP's.

A dimensional check of the Package assembly and components shall be performed for compliance with approved drawings.

A detailed test procedure of shop tests shall be submitted in advance of any testing and shall be approved by the Company.

6.4 Material and Welding Inspection

Non-destructive materials tests and pressure testing shall be in accordance with the ASME section VIII, Division 1 and Functional Specification for unfired pressure vessel-5601 and Functional Specification for Piping Fabrication and Installation 2004B and Functional specification for Welding and NDT – 2009F. The tests shall be witnessed and approved by an inspector representing the Company.

All butt welds shall be 100% examined by radiography and pressure retaining fillet welds shall be 100% examined by magnetic particle. Should radiography prove impractical, 100% ultrasonic inspection shall be permitted with the approval of the Company.

The final non-destructive examination of welds for acceptance purposes shall be carried out after completion of PWHT, where applicable. At the manufacturer's option, radiography may be performed before PWHT, in which case an ultrasonic examination shall be performed after PWHT for acceptance purposes.

All structural welds shall be tested in accordance with Functional Specification for Welding and NDT-2009F.

All Package and vessel pad eyes shall require 100% NDT.

Radiographic, ultrasonic, magnetic particle or liquid penetrant inspection of welds shall be in accordance with the ASME/ASTM specification.

All non-destructive testing shall be performed by a third party approved and Non-Destructive Testing (NDT) inspection organization.

Full traceability of all material components (to material certificates) is required.

Full traceability of all welds is required. The Contractor shall provide a weld map with full traceability to individual weld numbers. The traceable data include NDT reports, welding procedure and welder number.

6.5 Works Tests

All testing is to be performed as per relevant codes and this specification.

The minimum test requirements below shall be in addition to Manufacturer's standard tests.

6.5.1. **Hydrostatic Tests**

Hydrostatic tests in accordance with API 616 shall be undertaken on all pressure containing parts.

Pressure Vessels and Heat Exchangers shall be tested as described in the Functional specification 5601 and 5701F.

6.5.2. Unit Control Panel (UCP)

The tests shall be conducted at factory/works and shall include the following: 3

- A 48 hour burn-in period with internal cabinet temperature at rated maximum;
- A seven day burn-in period (which may include the 48 hour period as above) during which the controls are operated under simulated running conditions;
- A minimum of twenty one "power off-wait to steady state condition – power on" sequences;
- Full simulation testing of all control, logic, and sequences by interfacing with a dedicated test PLC;
- A Noise immunity test.
- Type test certificate containing above tests of the UCP shall be submitted.
- Tests shall be certified by the packager QA/QC/inspection agency and submitted for records. 3

6.5.3. **Mechanical run test**

Mechanical run testing shall be conducted at manufacturers work for turbine, including all auxiliaries. The Test shall be carried out as per API 616.

6.5.4. **Performance Tests**

The manufacturer shall carry out a performance test to demonstrate that the performance of the Turbine meets the guarantees values. 3

Performance tests shall be conducted at the respective equipment manufacturer's works for all items and auxiliaries. The performance test conditions, instrumentation and procedures shall be advised by the Vendor and be approved by the Company prior to tests. The Company shall witness these tests. 3

In accordance with the Manufacturer's standard, each gas generator shall be subjected to a mechanical running and performance test to confirm its performance, potential maximum power, normal fuel consumption and vibration levels.

Turbines performance tests shall be carried out according to the requirements of ASME PTC 22 and API 616 to demonstrate the full range of operating conditions and shall include operating speeds up to 110 % of the maximum.

Work's performance tests shall also be conducted on Gear boxes (where supplied) at full speed and full load according to the requirements of API 613.

6.5.5. **String Test**

A complete string test at module fabrication yard (at full load, full speed) for not less than four (4) continuous hours shall be carried out on the turbine with all Contractor supplied driven equipment, including gearboxes, lube oil systems, bases and control systems specific to the order.

The Contractor shall provide all the necessary interconnections between Package and UCP for the purpose of tests.

The test shall confirm the mechanical and operating integrity of the complete train and supporting equipment and shall be used to determine acceptable operating speeds, seal and bearing performance, vibration levels and to confirm critical speeds with actual run-up and coast down performance.

This test shall include but may not be limited to verify the performance of such systems as:

- Run down without AC power
- Package control and instrumentation system
- Pre-start and cranking systems
- Package safety systems such as shutdowns, alarms, sensors and monitors

- Filter performance. Test shall simulate blocked filter (i.e. at max pressure differentiation limit) when turbine is operating at rated speed and load.
- Enclosure ventilation system reference maximum allowable enclosure temperature.
- Enclosure sound attenuation performance.

6.5.6. Noise Test

As part of string test, the Contractor shall conduct tests of sound pressure levels generated by the Turbine.

Sound levels at a radius of one meter form the enclosure with the package being operated at full load, shall be measured in dBA and analyzed using an octave band analyzer.

7 SPARE PARTS & TOOLS

7.1 Spare Parts

The overall maintenance philosophy of platform is to keep the onboard maintenance as low as responsibly practical and minimize equipment sparing. Based on overall platform philosophy, it is essential to minimize the need of breakdown maintenance by using predictive condition monitoring techniques and carry out preventive routine maintenance.

In view of above, a complete list along with price of maintenance and spare parts required for the Turbine package shall be furnished. This shall include spares for start-up, commissioning and one year's operations. 3

The Vendor shall provide a recommended spare parts list to cover the commissioning and start-up for all the Turbine and associated equipment. Where major subassemblies such as rotating elements are recommended, pricing shall include for the supply of dedicated robust transport and storage containers manufactured in corrosion resistant materials such as 316 SS or equivalent. 3

Contractor shall supply spares for commissioning and start up.

All spare parts furnished by the Contractor shall be wrapped and packaged to preserve the parts as in original condition. The same parts shall be appropriately tagged (preferably using stainless steel tags) and coded so that later identification as 3

to their intended equipment usage will be facilitated. All items supplied shall be packaged separately and clearly marked as "Spare Parts" and shipped with the equipment in accordance with the instruction from the Company. Packing lists shall be furnished complete and in detail so that parts can be handled without uncrating, should this be required.

Recommended spares should take into account related factors of equipment reliability, effect of equipment down-time upon production and safety, cost of parts and availability of equipment service facilities.

7.2 Special Tools

The Contractor/vendor shall provide a list of any special tools required for the erection and maintenance for all the equipment comprising of the Gas Turbine Drive. Included in the list of special tools shall be tools required for access & removal operations such as mechanical handling and lifting aids, slings, alignment tools and brackets, spreader bars, Gas Generator fixing trolleys and turbine rotor cradles. 3

For multiple unit (2 or more units) installations, at least TWO (2) sets of special tools and fixtures shall be supplied by the vendor for each Gas Turbine model (i.e. Set of identical Gas Turbines for a specific service). In case of single unit installation, unless otherwise specified at least ONE (1) set of special tools and fixtures shall be supplied by the vendor.

All such tools shall be permanently tagged with information pertaining to their use and packed in rugged boxes. Any special drawings or instructions pertaining to the use of such tools shall be included in the instruction manual.

The contractor shall also provide one set of Boroscopic Inspection tools and associated accessories.

8 CONTRACTOR DATA REQUIREMENTS

Contractor shall furnish the data and drawings and other information as detailed in Functional specification for PGC 5404 and for GTG (4040).

8.1 Documentation

In addition to completing Data Sheets the Contractor shall also submit the following data: 3

- Details of the turbine blades.
- Standard or preliminary thrust bearing calculations shall be provided. 3
- The location and number of sensors monitoring temperature in the hot gas path and the maximum permitted variation in circumferential temperature as measured by these.
- Descriptions of the proposed vibration and position detectors.
- Description of the proposed inlet air filter design together with the Filter manufacturer's catalogue and installation list of successful "Offshore" applications in similar conditions.
- The minimum and maximum limit on Fuel Gas Heating Value and Wobbe Index for start up and normal operation.
- Where the proposed turbines require the use of synthetic lubricants, this must be stated along with the specific service, make up requirements and approximate length of useful life. A material safety Data Sheet (MSDS) shall be provided for any synthetic lubricant proposed. 3
- Details of the Turbine enclosure fan capacity and ducting arrangement, enclosure temperature and required number of air changes.
- A list of components of the Gas turbine and its auxiliaries that require regular periodical inspection and maintenance. The procedures for inspection and handling of components for maintenance shall be described. Weights and dimensions of major components that will need to be dismantled and transported during maintenance shall be identified.

8.2 Special Studies

- Calculations shall be provided that includes a complete rotor dynamics.
- A torsional analysis for the complete drive system shall be provided.

8.3 Information after Order

The Contractor shall provide details of:

- Inlet air filter performance, including overall performance curves (i.e. Pressure loss/filtration efficiency verses flow) and the performance for each stage, together with expected pressure losses when filters are in the clean and dirty condition. The Contractor shall also provide details of filter

cleaning and replacement procedures and the expected duration between these operations.

- The Contractor shall provide exhaust gas composition, temperature and pressure for all cases outlined in the bid.

9 PAINTING AND PREPARATION FOR SHIPMENT

9.1 Painting and Protective Coating

After all shop tests are completed, all exterior parts of the Turbine housing, except machined surfaces, shall be painted. Exposed machined surfaces shall be coated with a heavy duty rust preventative.

Painting and protective coatings and the procedures for preparation for painting shall be as specified in the Functional specification for Protective Coatings -2005 or as per vendor's standard paint specification for offshore platform. 3

9.2 Preparation for Shipment

Prior to shipment, all instrumentation and other equipment vulnerable to damage shall be disassembled and boxed separately for shipment.

All items shall be adequately packed and protected against damage during shipment. Each crate, bag or packages shall be clearly identified with the purchase order number and identification symbol, and shall be securely fastened to the Package.

All flanged openings shall be protected with steel plate covers attached by proper bolting and sealed with plastic compound.

All electrical control enclosures shall be appropriately plugged at entries and loaded with silica gel bags.

Screwed connections shall be protected with threaded forged steel plugs.

Contractor shall state his recommendations for long term storage (up to 12 months) for both indoor and open-air storage in a marine environment. 3

10 Warranty

Vendor shall have final and total responsibility for the design and performance of all equipment furnished by him. Vendor shall warrant that the equipment furnished by him and the performance of the said equipment is in accordance with this specification and general codes.

Vendor shall warrant and guarantee that all the materials and equipments incorporated in the entire equipment under his Scope shall be new, and all work shall be of good quality.

Vendor shall also be responsible for all system and detailed designing, the aspects of which may not have been covered in this specification as regards the workmanship, performance etc., of the equipment supplied by him.

Vendor shall, upon notice from Company, make good at his own expense all defects found during the warranty period expeditiously.

Vendor shall, if required, supply the services of an experienced engineer to supervise the correction of any defects found during the warranty period.

Vendor shall also warrant and guarantee all work, materials and equipment furnished by any Sub-Vendor and which is incorporated in the Package.

Annexure –I

Alarms and shut downs for gas turbine

	Function	
	Alarm	**Shutdown**
TURBINE		
Over speed (Gas Generator and Power Turbine)	X	X
Turbine Over Temperature	X	X
Combustion Ignition Failure		X
High Vibration Gas Generator	X	X
High Vibration Power Turbine	X	X
Vibration Monitor Failure	X	
Under Speed, Power Turbine		X
Failure to Start		X
Emergency Stop (Local and Remote)		X
High Bearing Temperature (Thrust and Journal)	X	X
High Fuel Gas Supply Pressure	X	X
Low Fuel Gas Supply Pressure	X	
Fuel Gas Valve Failure		X
High Inlet Air Filter Differential Pressure	X	X
High Exhaust Pressure	X	X
High axial displacement at GG and PT rotor	X	X
Low fuel supply temperature	X	
Fuel gas filter differential pressure	X	X
LUBE OIL SYSTEM		
Low Lube –Oil Pressure	X	X
Low Reservoir Level	X	
High Oil Filter Differential Pressure	X	
High Oil Temperature Cooler Discharge	X	
High Lube-Oil Temp. each bearing of Turbine, Compressor or Gearbox	X	X
GEAR BOX		
High Vibration of Gearbox	X	X
Vibration Monitor Failure	X	
High Bearing Temperature (Thrust and Journal)	X	X
ENCLOSURE		
High Ventilation air Filter Differential Pressure	X	

Enclosure pressure low	X	
Common Gas Alarm	X	X
Common Fire Alarm		X
Fire Extinguishing system Discharged		X
High Air Temperature	X	
Fire Extinguishing System Lockout	X	

ANNEXURE-GT

EXPERIENCE RECORD – GAS TURBINES

S.NO	PARAMETER	INFORMATION ON THE OFFERED MODEL	INFORMATION ON EXISITING INSTALLATIONS		
			1	2	3
A	B	C	D	E	F
1	Model				
2	No. of shafts				
3	Service (Compressor drive / Power generation/etc.)				
4	Location (Onshore/Offshore)				
5	GG Model/Make (including manufacturer's name and address of plant where manufactured)				
6	PT Model/Make (including manufacturer's name and address of plant where manufactured)				
7	ISO rating (KW)/site rating with site conditions.				
8	Guaranteed ISO Heat rate with tolerance				
9	PT Inlet/Exhaust Temp. (ISO rated/site rated.)				
10	GG RPM (ISO rated/site rated)				
11	PT RPM (ISO rated/MCS)				
12.	Expected TBO for offered unit/Actual TBO for referenced unit.				
13.	Type of fuel used (Liquid/Gas/Dual fuel) with fuel specifications / details.				

S.NO	PARAMETER	INFORMATION ON THE OFFERED MODEL	INFORMATION ON EXISITING INSTALLATIONS		
			1	2	3
14.	Supply date/date of commissioning				
15.	Number of fired hours as on _____				
16.	Manufactured in (Address of Plant)				
17.	Assembled and tested in (Address of plant)				
18.	Name and address of Consultant, if any.				
19.	Purchaser (Name, address, Telex, No.)				
20	Location with and Address of plant where the unit is in operation with name, phone, telex no. of contact person)				
21	Major problems encountered during commissioning and till date in operation.				

NOTES:

1. Vendor to clarify the meaning of each letter/digit in the model designations.
2. Since the above information will be utilized to assess proveness of offered model, it is in the interest of the Gas Turbine Vendor to pick-up those cases out of total list of reference which most closely match the offered model.
3. Gas turbine vendor to give exact address and telex no. etc. of 3 or 4 installations which may be visited by the purchaser/its representative if felt necessary.
4. This experience record should be submitted along with Vendor's standard reference list for the offered model.

FUNCTIONAL SPECIFICATION

FOR

UNFIRED PRESSURE VESSELS

PREPARED / REVISED BY	REVIEWED BY	APPROVED BY	TOTAL No. OF PAGES	DATE	REV. No.
KNS	NM	AJ	30	31/03/2017	3
PLN	NG	PKM	30	07/12/2011	2
T. MITRA	SKG	JSS	30	13/01/2005	1

CONTENTS

1. INTRODUCTION

1.1 General

1.2 Contractors Responsibilities

2. CODES & STANDARDS

2.1 Codes, standards & regulations

2.2 Project specifications

3. SCOPE OF WORK

3.1 General

3.2 Scope of supply

4. ENVIRONMENTAL DESIGN CRITERIA & UTILITIES

4.1 Climatic Conditions

4.2 Seismic and Transportation Loads

4.3 Design Life

5. GENERAL REQUIREMENTS

5.1 Company's requirements

5.2 Earthing

5.3 Dimensions

5.4 Fireproofing and Insulation

5.5 Cathodic Protection

5.6 Internal & External Coating

5.7 Corrosion Resistant Alloy Cladding and Weld Overlay

6. DESIGN REQUIREMENTS

6.1 Design Conditions

6.2 Design Loading

6.3 Design Stress

6.4 Deflection Limits Due to Applied Loads:

6.5 Vortex Breakers
6.6 Drawings and Calculations
6.7 Design Load Cases

7. MECHANICAL REQUIREMENTS

8. MATERIALS

9. FABRICATION

10. INSPECTION, TESTING AND CERTIFICATION

11. PAINTING AND PREPARATION FOR SHIPMENT

1.0 INTRODUCTION

1.1 GENERAL

This Specification gives the general requirements for Unfired Pressure Vessels for the offshore projects in western offshore field.

1.2 CONTRACTORS RESPONSIBILITIES

The contractor shall be responsible for the complete design, manufacture, supply, inspection, testing and documentation of the pressure vessels, including full compliance with all applicable design codes and standards, including those listed in section 2.0 of this specification and Basic Bid Work & approved P&ID.

Contractor shall procure vessels from suggested vendors.

2.0 CODES AND STANDARDS

2.1 CODES, STANDARDS AND REGULATIONS

The vessels covered by this specification shall be designed, manufactured and tested in accordance with the requirements of this specification, and the following latest edition of Codes, Standards and Statutory Regulations (where applicable).

API RP 2A	Recommended Practice for Planning, Designing and Constructing Fixed Offshore Platforms.
3 ASME VIII Div 2	Pressure Vessels and Boiler Code.
ASME II Part A	Materials Ferrous Materials
ASME II Part B	Materials Non Ferrous Materials
ASME II Part C	Materials Welding Rods, Electrodes & Filler Metals
ASME V	Non Destructive Examination
ASME IX	Welding and Brazing Qualifications
ASME B 16.5	Pipe Flanges and Flanged Fittings
ASME B 16.20	Metallic Gaskets for Pipe Flanges

ASME B 31.3	Process piping
ASME B 16.47	Large Diameter Steel Flanges
3 ASTM A 193	Alloy Steel & Stainless Steel Bolting Materials
ASTM A 194	Carbon & Alloy Steel Nuts for Bolts
ASTM A435	Straight Beam Ultrasonic Examination of Steel Plates
API 510	Pressure Vessel Inspection Code: Maintenance Inspection, Rating Repair and Alteration
3 NACE MR 0175	Sulphide Stress Cracking Resistant Metallic Materials for Oilfield Equipment.
3 NACE RP 0181	Liquid Applied Internal Protective Coatings for Oilfield Production Equipment
3 NACE RP 0575	Internal Cathodic Protection Systems in Oil Treating Vessels
SSPC SP6	Commercial Blast Cleaning
WRC 107	Local Stresses in Spherical and Cylindrical Shells due to External Loading
WRC 297	Supplement to WRC 107

2.2 PROJECT SPECIFICATIONS

The vessels covered by this Specification shall be designed, manufactured and tested in accordance with the requirements for these Project Specifications in addition those listed in *section 2.1* of this specification.

a) Piping Design Criteria (Vol II sec 3.3)

b) Piping Design (spec. 2004-A)

c) Piping Fabrication (spec. 2004-B)

d) Protective Coatings (spec. 2005)

e) Piping & Equipment Insulation (spec. 2006)

f) Welding & NDT (spec. 2009F)

3.0 SCOPE OF SUPPLY

3.1 GENERAL

The Contractor shall be responsible for the design, engineering, coordination of supply of materials, manufacture, assembly, testing, delivery of the equipment, supply of drawings and data, all sub-contractor coordination and guarantees as required, not withstanding any omissions from this specification.

3.2 SCOPE OF SUPPLY

The scope of supply for each vessel shall include, but not be limited to, the following:

a) Vessel

b) Any packaging and nozzle protection required for transportation or storage.

c) Any specified insulation or personnel protection.

d) Any code recommended passive fire protection or fixing devices.

e) Documentation detailed by this specification and any referred attachments.

4.0 ENVIRONMENTAL DESIGN CRITERIA

4.1 CLIMATIC CONDITIONS

The climatic and other conditions under which the Equipment will operate are detailed in Design criteria -general (section 3.1 Vol II of bid document). Conditions specific to the Equipment Package will be detailed in process design criteria.

4.2 SEISMIC AND TRANSPORTATION LOADS

All equipment supports and braces, pipe supports and other support steelwork, including temporary braces, shall be designed to withstand seismic loads applicable to this project. Refer to the Structural basis for seismic design considerations.

All equipment supports and braces, pipe supports and other support steelwork, including temporary braces, shall be designed to withstand the operating, lifting, Transport (by road and by sea) and hydro test loads specified in Project Specification.

4.3 DESIGN LIFE

Vessel shall be designed for minimum 25 years life or as specified in the bid, whichever is higher. 3

5.0 GENERAL REQUIREMENT

5.1 COMPANY'S REQUIREMENTS

The contractor shall prepare vessel outline drawings, detailed data sheets and detailed calculations for the design of the pressure vessels and submit to company for approval. Based on the above the Contractor shall prepare detail shop drawings and submit to Company for review. 3

The contractor shall provide the company with all fabrication drawings, weld procedures and detailed calculations for approval. Shop work shall not start until the Contractor has received drawings and weld procedures approved by the Company. No subsequent revision may be issued to the fabrication shop unless it is approved by the Company. Weld procedures shall be accompanied by a weld procedure index and weld map.

5.2 EARTHING

Each vessel shall be supplied with a minimum of two earthing bosses as per the requirements of Project Specification. 3

5.3 DIMENSIONS

All vessel connections, internals, etc, shall be located from datum or references line. SI units shall be used, with the sole exception of pressure, for which kg/cm^2 shall be used.

5.4 FIREPROOFING AND INSULATION

Contractor shall provide the fireproofing or insulation as per the provisions of applicable codes & standards.

5.5 CATHODIC PROTECTION

The Contractor shall supply cathodic protection for the vessel wherever it is appropriate to meet the vessel design life. Anode material and calculation report should be submitted to Company for approval. This shall be read in conjunction with electrical design criteria.

5.6 INTERNAL AND EXTERNAL COATING

Surface coatings shall be applied as required to achieve the design life of each specific vessel. Internal Coatings and External Coatings should also comply with the Project Specification 2005 "Protective Coatings for Offshore Structures and Facilities".

5.7 CORROSION RESISTANT ALLOY CLADDING AND WELD OVERLAY

Corrosion resistant alloy cladding and weld overlay apply as per the provisions of codes & standards and approved P&ID. Materials shall comply with the requirements of ASTM A264 Stainless Chromium Nickel Steel Clad Plate, Sheet & Strip. Any austenitic chromium nickel stainless steel cladding shall be the extra low carbon (0.03 percent maximum).

The Contractor can select between the uses of explosive clad plate, roll bonded clad plate, and weld overlay, or a combination of these as best suits the specific application. Thickness of cladding shall be minimum of 3 mm unless specified. The maximum total cladding thickness shall not exceed 9mm without specific written approval.

Heavily loaded internal attachments, such as grid supports, etc, shall only be attached directly to the carbon steel shell; Cladding shall be locally removed to facilitate their attachment. Lightly loaded internal attachments, such as tray supports, may be welded directly to the cladding.

3 All clad vessels shall have weld overlaid nozzle wetted surfaces. (Incoloy-825 cladded vessel with Inconel-625 weld overlaid nozzle is also acceptable.) Sleeves are acceptable for nozzles with nominal diameters 100mm or less. Weld overlay cladding shall be in accordance with Company's Welding Specification.

Where a lack of bond is detected between cladding and parent material, the cladding shall be removed and the area shall be repaired. The Company shall be notified in writing of any repair exceeding 6000 mm^2 in area or of any plate requiring more than three repairs regardless of size. All repairs, regardless of area, shall be recorded on a scaled sketch and shall be 100 percent ultrasonically examined.

6.0 DESIGN REQUIREMENT

6.1 DESIGN CONDITIONS

3 a) Vessels with design pressure 1.0 Kg/Cm^2 and less than 210 Kg/Cm^2 shall be designed, fabricated, inspected and tested as per ASME Code Section VIII, Division 1 (latest). ASME Code Stamps are required.

b) Vessels with design pressure 210 Kg/Cm² and more shall be designed, fabricated, inspected and tested as per ASME Code Section VIII, Division 2 (latest). ASME Code Stamps are required.

Nozzles greater than DN80, onto which piping is to be attached, shall be designed to accommodate external piping loads.

Design Pressure

Unless stated otherwise design pressure shall be considered as per the following 3

a. When the maximum operating pressure is up to and including 70 Kg/cm^2 (1000 psi), design pressure shall be operating pressure plus 10% or 1 kg/cm^2 whichever is higher.

b. When the maximum operating pressure exceeds 70 Kg/cm^2 (1000 psi), design pressure shall be operating pressure plus 5% or 7 kg/cm^2 whichever is higher.

c. If there is possibility of vessel being subjected to vacuum during normal operation (including start-up & shutdown) shall be designed to withstand external pressure of 1.033 kg/cm^2 and full internal vacuum, unless otherwise specified. 3

Design Temperature

Unless stated otherwise design metal temperature shall be considered as per following:

For vessel operating at 0^{0}C and above, the design temperature shall be operating temperature plus 15^{0}C.

For vessel operating below 0^{0}C, the design temperature shall be minimum operating temperature.

6.2 DESIGN LOADING

The vessel shall be self-supporting and designed to withstand a wind loading based on the projected area of curved surfaces. The area of ladders, platforms and pipe work shall be assumed as equivalent to one and one half times the wind loading of the insulated vessel.

Pressure vessel components their supports and anchorage, shall be designed to withstand the results of the following combinations of loads and forces within the limits of stress set by the code and the deflections set by Section 6.4 of this Specification.

Erection Condition (The empty weight plus the weight of any internals present during erection)

Hydro test Condition (The empty weight plus weight of water to fill the vessel)

Operating and Design Condition (The empty weight plus the weight of all internals, packing insulation and operating liquid).

Hot Shut Down Condition (As for the Operating and Design Condition, but excluding the operating liquid)

Wind and Seismic Loads

Transportation/Dynamic Loading Condition

Periodic Site Test Condition

Any other condition that would affect the safety of the vessel e.g. cyclic loading and slug forces when identified.

6.3 DESIGN STRESS

Allowable stress shall be the maximum stresses permitted by ASME Section VIII. 3
The allowable general membrane stress shall be the maximum of 90 percent of the minimum specified yield or proof stress of the material of construction.

6.4 DEFLECTION LIMITS DUE TO APPLIED LOADS

The static deflection of vertical vessels in the corroded condition due to the full wind load shall be limited to 1 in 200 of the vessel length. The deflection due to applied load and self-weight of distributors, gratings, etc, and their supports, in the corroded condition, shall be limited to 1 in 500 of their span.

Vertical vessels with a ratio of overall height to diameter exceeding 8:1 shall be designed for dynamic stability under wind-induced vibrations. For these vessels, deflection in the corroded condition due to the full wind load and earthquake loads shall be limited to 1 in 200 of the vessel height. The dynamic amplitude of vibration due to wind loads shall not exceed 0.2 x diameter.

6.5 VORTEX BREAKERS

Vortex breakers shall be provided as required / indicated.

6.6 DRAWINGS AND CALCULATIONS

Shop detail drawings shall be complete with all dimensions, thickness and details of construction including dimensional location of circumferential and longitudinal seams, and all nozzle locations and orientations. All material thickness shall be shown, including spherical radius and knuckle radius of heads. All welds shall be detailed or fully described by notes or weld symbols, and annotated to the relevant weld procedure specification.

Assembly drawings shall contain all pertinent information relating to the standards, codes and specifications used in the design, fabrication, inspection and testing of the vessel, including the materials used, plus the total weight of the vessel empty in operation and full of water. Details of the skirts, base rings and chairs for vertical vessels or saddles for horizontal vessels shall be provided complete with dimensions, materials and the number, diameter and location of anchor bolt holes. If this information is furnished by the Company it shall be checked by the Contractor and so noted on the appropriate drawing.

The contractor shall submit detailed calculations establishing the compliance of their design with the requirements of this specification, the data sheets, the certifying authority and all statutory regulations. As a minimum the following calculations shall be performed and submitted.

Shell and head (including any liquid hold up boots)

Nozzles and nozzle reinforcement

Vessel support design for seismic, wind and hydro test loads

Lifting lugs or trunnions.

Local shell stress for nozzles and any loaded attachments

Internal baffles for liquid loadings.

Pressure and temperature ratings of nozzles shall be as per ASME B 16.5.

Methods of calculations which are not in accordance with the relevant code or established procedures shall be subject to approval by the Company for its applicability to the design.

All calculations shall be complete giving all references and showing all working methods. The contractor shall provide proof of software verification for any software

used. Computer printouts will not be accepted without the program flow chart, input data and complete printout, and then only by prior written agreement with the company at the tendering stage.

Approval of drawings, calculations and other documents by the Company does not relieve the contractor of their responsibility for the correctness of the design to suit the stated conditions.

6.7 DESIGN LOAD CASES

The vessels and their supports shall be designed for the following load conditions

- Design pressure and temperature which for design purposes shall be considered full of water. Accordingly the design pressure shall be increased to allow for static head of water.

- Seismic loadings, coincident with maximum design pressure and temperature and the operating weight of vessel.

- Wind loadings coincident with maximum design pressure and temperature and the operating weight of vessel. Wind loadings shall also be applied with the vessel in the empty condition.

- Hydro test loading coincident with a reduced wind loading of 0.25 times the wind load in the operating condition.

- Loads during handling and erection with a dynamic amplification factor of 1.25 during handling.

Additional calculations shall be undertaken where contractor identifies loadings due to slug forces this is of particular significance for slug catchers.

Piping loads shall be considered for local stress analysis.

The vessels shall be analyzed in their corroded state for each load combination. For vertical vessels the hydro test loading combination shall be analyzed with the vessel in the vertical position.

7.0 MECHANICAL REQUIREMENTS

7.1 **MINIMUM THICKNESS :** Vessel Shell and Heads shall have minimum wall thickness calculated with design pressure and temperature , in accordance with codes but in no case shall the thickness be less than that determined as under :

7.1.1 The minimum thickness of carbon steel pressure vessel component where the specified corrosion allowance is 1.5 mm shall be as specified below:

If the specified corrosion allowance exceeds 1.5mm, add corrosion allowance less 1.5mm to the minimum specified thickness below:

a) Shell and Head : 6 mm for vessels 1220 mm diameter and less.

: 8 mm for vessels with diameter greater than 1220mm but less than 2400mm.

: 10 mm for vessels 2400mm diameter and larger.

: 10 mm for vessels exceeding 7600mm overall height from Deck.

3

b) Skirt, internal pipe and attachments : 6mm.

7.1.2 The minimum thickness for alloy steel/ stainless steel pressure vessel components shall be as specified below excluding corrosion / erosion allowance if any.

a) Shell and Head up to diameters 1500 mm = $(D/_{1000} + 1.5)$ mm.

b) Shell and head with diameter exceeding 1500mm = $(D/_{1000} + 2.5)$ mm.

Where D is the diameter in mm.

7.1.3 NOZZLES

Minimum nozzle pipe thickness shall be smaller of the following:

- Standard pipe wall thickness + actual corrosion allowance.
- Adopted vessel thickness.

For sizes 300mm and larger fabricated nozzles neck shall be acceptable with full radiography of longitudinal weld.

The mill tolerance on pipe thickness shall be deducted on calculating the required nozzle neck thickness or opening reinforcement.

7.2 CORROSION ALLOWANCE

Unless otherwise specified, carbon steel vessels and internals shall have 3mm corrosion allowance applied to all pressure retaining parts and all surfaces of non removable internals exposed to the process fluid. Removable internals shall have half the specified corrosion allowance on all surfaces exposed to process fluid.

No corrosion allowance is required on stainless steel materials or materials protected by stainless steel cladding unless specified / approved.

When corrosion protection is provided for a corrosion resistant metallic lining a minimum thickness of 3 mm of lining material shall be used as per approved data sheet.

Vessel parts which are subjected to erosion (e.g. due to impingement by the process stream) shall be protected with wear plates or impingement baffles.

7.3 HEADS

Vessel heads shall be one-piece semi ellipsoidal (ratio 2:1) unless otherwise stated.

Torispherical and hemispherical heads may be used provided all pertinent dimensions and information are submitted to the company for approval before the heads are ordered ASME flanged heads is not acceptable.

Heads produced from more than one plate shall have the welds 100% radiographed after forming.

7.4 SUPPORTS

All vessels shall be designed to be self-supporting without benefit of guys or braces. Supports shall be continuously welded to vessel shells.

7.4.1 SADDLES

The Contractor shall furnish saddles. No more than two steel saddles shall be used for horizontal vessels. They shall be clear of vessel seams. Saddle pads shall have rounded corners. Saddles shall provide support at least 120^0 arc at the circumference of the vessel shell. Each saddle shall be attached to the shell complete with a 8mm minimum thick doubler plate. The doubler plate shall have two telltale holes (hole dia. shall be as

3

per ASME code) at outer extremities. The saddle base plate shall be a minimum of 10mm thick.

An earthing boss shall be fitted to each saddle.

Calculations shall be provided for the effect of support saddles on the vessel shell and heads.

Vessel supports shall accommodate thermal expansion by preferably using a non-corroding "slotted hole" sliding arrangement.

The contractor shall provide details of the arrangement proposed at the tender stage. Vessel supports shall incorporate pads for hold down bolts. The pads shall be designed to facilitate welding directly to the platform deck or structure.

7.4.2 SKIRTS

Vertical vessels shall be supported on steel skirts. Small vertical vessels less than 1200mm inside diameter may be supported on structural legs or lugs where advantageous to plant layout or as specified. Where provided Lugs or legs must be designed to accommodate lateral loads resulting from wind, seismic and sea transportation forces. Refer to clause 6.7

Vessel skirts shall be of the height required to provide a clearance not less than 480mm between the bottom of the head and the deck. The mean diameter of the skirts shall be the same as the mean diameter of the bottom shell course.

All vessels provided with skirts shall have reinforced access openings of at least 400mm diameter, with the exception that skirts for vessels smaller than 920mm diameter shall be provided with at least one 200mm diameter access opening. Desired orientation of openings shall be shown on the vessel drawing, or affixed on contractor's approval drawings.

Vessel skirts shall be provided with 80mm diameter reinforced vent holes at approximately 920mm intervals on the circumference, located as near the vessel head as permitted by insulation or other attachments. No skirts shall have less than two such vent holes.

The following joints factors should be applied to vessel skirts

- Circumferential seams 0.7
- Skirt to shell joint 0.55

- Skirt to base ring joint 1.0

7.5 MANHOLES, NOZZLES & INSPECTION OPENINGS

Manholes, cleanout openings and end flanges shall be provided as required for operation and maintenance and to meet ASME VIII requirements for inspection.

7.5.1 NOZZLES

The minimum connection size welded into a vessel shall be DN50 (2”NB) swaged if required to the specific line size and terminating with a flanged connection

Vessel nozzles of sizes DN65 (2 ½”) DN90 (3 ½”) DN125 (5”) and DN180 (7”) shall not be used.

Nozzles necks made of pipe shall be of seamless material. All nozzles shall be set into the vessel shell. Full penetration welds shall be used for all body flange, nozzle and manhole attachments. Set on type nozzles shall only be used with prior agreement from the company and provided that 100% Ultrasonic Examination of the shell plate is carried out adjacent to the opening. Examination is to be in accordance with ASTM A-435 to cover a minimum of two times the opening diameter.

Weld neck flanges shall be used on all nozzles with the hub bore to match that of the nozzle neck. Long welding neck flanges may be provided as an alternative. Flanges shall be in accordance with ASME B16.5 with bolt holes straddling main vessel centerlines unless otherwise noted. Slips on flanges are not acceptable, with the exception that flanges for internal non-pressure piping may be slip on.

Flanges for external nozzles and manholes shall be in accordance with ASME B 16.5 for DN50 to DN600 and with ASME B 16.47 Series B for flanges DN 650 and larger. They shall be raised face unless otherwise shown on the individual vessel data sheet and/or drawings. Non-standard size flanges shall be calculated in accordance with ASME Code Rules.

Nozzles for drains, vents and relief valve shall be flush with inside surface of the vessel. Other nozzles may protrude inwards to the extent required for internal welds unless fittings or removal of internals required them to be flush.

Threaded connections shall not be permitted on vessels.

7.5.2 NOZZLE LOCATIONS AND PROJECTIONS

Nozzles shall be set into the Vessel shell unless specified otherwise on Vessel data Sheets.

Nozzle projection will be detailed on vessel data sheets.

7.5.3 MANHOLES

The minimum number of manholes will be as specified / required. Manholes shall have at least DN500 nozzles with 475mm clear inside diameters unless otherwise specified in the approved Data Sheets and are to be complete with blind flanges, bolting, gaskets, and davits or hinges. Bolting as per ASME B 16.5 shall be used. The material used for any manhole shall be the same material as the shell or head in which the manhole is installed.

Davits and hinges shall be provided for each manhole or inspection opening where the blind flange, bolting and gasket weight more than 30 kg

Bubble tray or packed towers shall be served by adequate internal and external access openings and shall have at least a top and bottom manhole. Packed towers shall have a manhole above the top level of the packing and below each support grid. A minimum 300mm nominal opening shall be provided above each grid to permit removal of packing. Where the centerline of the lowest manhole is more than 1525mm above the vessel bottom, ladder access shall be provided to the interior vessel bottom.

7.5.4 INSPECTION OPENINGS

Where inspection openings are required the minimum size shall be 150mm nominal.

Cleanout openings shall be 200mm minimum inside diameter, and shall be complete with blind flanges, bolting and gaskets and hinged, if not accessible to ground or a platform, for ease in maintenance.

7.5.5 REINFORCEMENT OF NOZZLES

Reinforcement of nozzles and manholes shall be designed to provide 100% compensation for the as built thickness of the shell or head in accordance with the specified design code.

The reinforcement for openings shall be provided by either self reinforcing nozzles or built up seamless pipe and WN flange with pad reinforcement as necessary.

Reinforcing pads shall have a minimum width of 50mm or three times the pad thickness, whichever is greater. Reinforcing pads shall be made in one piece if possible. Large reinforcing pads may be made from two pieces provided that written approval is obtained from the company.

Integral reinforcement of openings shall be provided for vessels in the following categories. Reinforcing pads shall not be used in these instances:

- Vessels in lethal service
- Vessels designed for temperature of - 16ºC and below

All rectangular reinforcing pads when used for external or internal attachments shall have 25mm minimum radius at corners.

7.6 INTERNAL ATTACHMENTS

The vessel fabricator shall furnish and install internal support rings, down comer supports, bars, gratings, grating supports, tray lifting, tray leveling device vortex breakers, piping and other internals as and where required by the appropriate data sheets. Internals shall be fixed by bolting to cups or rings for ease of maintenance.

Mist eliminator elements shall be installed in gas scrubbers, separators, absorbers and any other vessels where off gas is produced.

Unless otherwise stated elements shall be manufactured of 316L stainless steel or Monel wire mesh elements shall not be less than 150mm thickness. Elements shall be supported above and below by carbon steel grids, except where corrosion allowance exceeds 3mm the grid shall be stainless steel wire.

Mitered bends/joints shall not be used, unless otherwise specified on the Project Data Sheet or Drawings.

All removable internals shall be fabricated so as to pass through the vessel manholes, major internal piping shall be flanged for ease of removal through the vessel manholes.

Internal parts shall be capable of supporting a 90 kg concentrated load for inspection and clean out operations during erection of the vessel.

All attachment welds for vessel internal to pressure retaining parts shall be continuous. Multi pass welds shall be used single pass welding shall not be acceptable. Seal welds shall have a throat thickness greater than the vessel shell corrosion allowance. All internal crevices where supports and fixed internals are welded to the shell heads shall be seal welded to exclude process fluids. Seal and strength welds shall carry the appropriate corrosion allowance.

All bolted internals shall be capable of being installed or removed through the vessel man ways; all internal bolting shall be secured with lock nuts.

7.7 EXTERNAL ATTACHMENTS

The vessel fabricator shall furnish and attach all insulation support rings, external pressure stiffeners, lifting lugs ladder and platform lugs, and pipe supports unless otherwise specified. Reinforcing pads shall be continuously welded to the vessel beneath all attachments where the welding of such attachments would cause excessive concentration of stress of vessel at those points. Each pad shall contain at least one ½" NPT tapped tell tale hole.

Platforms and ladders for maintenance shall be provided as necessary for safe access to manholes, relief valves, control valves, controllers etc. Sample connections, thermometers, thermo wells, gauges and control instruments shall be accessible from the platform or a ladder.

All attachments shall be continuously welded.

All vessels, vertical or horizontal, shall be furnished with a minimum of two lifting lugs, which shall be designed for a load equal to two times the shipping weight.

Where specified, vessels shall be provided with temporary sea fasteners

Columns shall have 750mm wide platforms at all manholes and at any other maintenance locations identified.

Piping within skirts on vertical vessels shall be fully butt welded. The first flanged joint on any such pipe shall be just outside the skirt.

Insulation supports on vessels operating above 100ºC may be stitch welded.

7.8 PASSIVE FIRE PROTECTION

The requirements for passive fire protection will be as specified and shall conform to the requirements detailed in project specification 5102. Where specified, the Contractor shall supply necessary attachments, studs, etc, affixed to skirts and saddles.

8.0 MATERIALS

8.1 GENERAL SPECIFICATION

Materials shall be new and unused.

Materials of construction for pressure parts shall be in accordance with the design code, the approved data sheets and Annexure.1.

For carbon /carbon manganese steel vessels operating below 0º C and requiring impact testing all pressure parts and direct attachment materials shall be manufactured with fully killed, fine grain materials.

Material for pressure vessels designed according to ASME section VIII division 2 shall be given special consideration as per code. 3

8.1.1 SOUR GAS SERVICE

Vessels materials in contact with the process stream shall be deemed to be operating in a sour gas environment as defined by NACE standard MR 01-75. All sour service material shall meet the special testing viz. HIC (as per NACE TM 02-84) and inclusion count check (as per ASTM A45).

Sour gas service materials shall be in accordance with NACE standard MR-01-75 Section-3, Ferrous Metals and Section 6, Bolting.

All stainless steel materials shall not have Sulphur content greater than 0.05%

Copper based materials are prohibited from usage in sour gas service. Stress relieving of rolled plates, formed heads and pipe fittings shall be in accordance with NACE standard MR-01-75.

The following treatments during steel making are mandatory for plates and finished products made from plates only.

- Steel shall be made by low Sulphur and low phosphorous refining process and shall be vacuum degassed while molten by means of an approved procedure.
- Effective supplied shape control by calcium treatment, if the Sulphur level is in excess of 0.002%
- Specific treatment to control on metallic inclusions like Aluminum Oxide clusters, silicates and Magnesium Sulfide etc.

8.2 SUPPORTS AND MISCELLANEOUS

Any material welded directly to the pressure retaining parts shall be of similar quality as the vessel plate, including impact requirements if any, for a length measured from the

vessel wall of at least 150mm. The material of such items beyond this point may be structural quality A283 Gr. C or equal

8.3 BOLTING

Bolts and nuts shall be furnished by the Contractor for all cover plates manholes blind flanges and bolted attachments supplied with vessels. Bolts and nuts shall be new.

Internal bolting shall be SS 316 unless specified.

External alloy steel stud bolts shall be in accordance with ASTM A-193 Grade B7M Nuts for stud bolts shall be in accordance with ASTM A-194 Grade 2HM, unless otherwise specified. External bolts and nuts shall be protected against aggressive salty marine atmospheric corrosion according to the requirements of project specification.

Flange bolting of nominal size M40 (1 ½") and above shall be subject to bolt tensioning. Contractor to supply flange stud bolts over length by one nut thickness and complete with 3 nuts to facilitate bolt tensioning for all flanged connections for which Contractor supplies a mating flange. Contractor will carry out bolt tensioning on site.

8.4 FLANGES

3 All flanges shall be as per ASME B 16.5. Flanges not covered by ASME B 16.5 shall be as per ASME B 16.47. Flange material shall be of a similar quality to the vessel shell including impact properties. Forgings shall be supplied in the normalized condition.

8.5 GASKETS

Gaskets for raised face flanges shall be spiral wound non asbestos filled with 316 stainless steel windings in accordance with ASME B 16.20 with the exception that compressed fiber gaskets complying with ANSI B16.21 are acceptable for cooling water service. Gaskets containing asbestos are not permitted.

Gaskets for ring type joint flanges with pressure ratings of ASME Class 900 shall be soft iron cadmium plated, Type R. Gaskets for ring type joint flanges with ASME Class 1500 or API 2000 lb and higher-pressure rating shall be low carbon steel, cadmium plated Type "RX".

8.6 IMPACT TEST REQUIREMENTS

Charpy V-notch impact testing is required in accordance with ASME VIII, Division 1, Clauses UG 84 and UCS66.

9.0 FABRICATION

9.1 START OF FABRICATION

No fabrication may begin until the contractor has received written approval of his detailed fabrication drawings from the company or their authorized representative

The contractor shall notify the company or their authorized representative in reasonable time before actual fabrication begins.

9.2 FORMING

Shell plates shall not be formed until actual head dimensions are known.

Plates shall be formed in the same direction as the final roll given in manufacture.

9.3 WELDING

All welding shall be in accordance with ASME section VIII. The Contractor shall submit proposed weld procedures and weld details for the Company's review and approval prior to commencing any production welding.

Low hydrogen electrodes shall be dried or baked at the temperature level and times specified by the manufacturer, and shall be used within 8 hours when stored in quivers. Electrodes stored in quivers, but not used within the specified times, shall be restored in ovens.

The Contractor shall provide proof to the satisfaction of the Company's Inspector that the welder has been using the process for which he is qualified within the previous 3 months. If not, then the welder shall be required to qualify again.

Adjacent longitudinal seams shall be staggered to give between seams a minimum 60 orientation or 200mm whichever is greater. Shell seams shall be located to miss long internal attachment welds (trays down comers, etc.) and all nozzles and manhole openings their reinforcing pad.

Longitudinal and circumferential seams in shells and all seams in heads shall be full penetration single or double but welds of the 'V' or 'U' type Lap welds are not permitted.

Piping within skirts on vertical vessels shall be fully but welded. The first flanged joint on any such pipe shall be just outside the skirt.

9.4 WELD REPAIRS

All repairs welding shall be in accordance with procedures previously approved by the Company. The repaired weld shall be subjected as a minimum requirement, to the same testing and inspection as the original weld.

The cost of all repairs and subsequent inspection shall be the responsibility of the contractor.

Weld repairs shall take place before hydro testing and care shall be taken to ensure that the wall thickness is not reduced below the specified minimum design thickness. In the event repairs are done after hydro-testing, tests shall be repeated.

Surface defects and areas of weld resulting from the removal of temporary attachments shall be ground smooth and the area subjected to 100% crack detection.

9.5 WELDING PROCEDURE QUALIFICATION RECORD (WPQR)

Each weld procedure shall be covered by a suitable procedure qualification tested in accordance with the requirements of ASME IX

9.6 PREHEAT REQUIREMENTS

The minimum preheats for ferrite steels shall be in accordance with Appendix R of ASME VIII Div.1.

9.7 POST WELD HEAT TREATMENT REQUIREMENT

Vessels shall be post weld heat treated when required by ASME Section VIII, depending on the combination of material, thickness and design temperature. All heat treatment shall be recorded by temperature recording charts. No welding shall be permitted once post weld heat treatment is performed.

3

All vessels in lethal service shall be post weld heat-treated. Post weld heat treatment (PWHT) shall also be considered for vessels subjected to large amounts of welding and where pressure parts have been formed from thick plate into tight radii.

The use of manually operated gas torches or gas rings shall not be permitted for PWHT.

The welding and associated heat treatment of stainless steels shall take into account the ease with which this material can be sensitized or its corrosion resistant properties thereby impaired.

Flange facings shall be protected against oxidation during heat treatment.

9.8 SHOP DRAWINGS

The contractor shall submit to the Company detailed shop drawings for approval prior to starting fabrication, shop drawings shall be fully dimensioned and shall include documentation of design data, material data, weld details, NDT requirements heat treatment details and test requirements. Documents shall have been checked prior to submission.

Approval of the shop drawings by the Company will not relieve the Contractor from the responsibility of ensuring the vessels comply with this specification.

The Contractor shall provide certified as built shop drawings with the vessels.

10.0 INSPECTION, TESTING AND CERTIFICATION

10.1 GENERAL

All non-destructive examination shall be carried out in accordance with ASME Section V as a minimum. All personnel involved in non-destructive testing shall be qualified to a nationally recognized standard.

Inspection and testing shall be carried out at the manufacturer's works and shall be witnessed by the Company's authorized representatives and/or the certifying authority if required.

The responsibility for inspection rests with the Contractor. However, the Company reserves the right to inspect vessels at any time during fabrication to ensure that materials and workmanship are in accordance with the specification, the vessel data sheets and/or the approved drawings.

The contractor shall provide a projected shop schedule with appropriate fabrication stages and the inspection activity schedule.

The approval of any work by the Company or their authorized representative and the release of a vessel for shipment shall in no way relieve the contractor of any responsibility for carrying out the provisions of this specification.
The contractor shall inform the company at the time of placing the order of any test, which cannot be adequately performed.

Prior to testing, vessels shall be cleaned of all weld spatter, loose scale and foreign matter. Liquids used for cleaning shall be completely drained. Vessels with shell thickness greater than 20mm ¾" shall be cleaned externally by a commercial grit blast,

No 6 to SSPC SP 6 to ensure freedom from embedded foreign matter. Any defects discovered during cleaning shall be repaired.

10.2 RADIOGRAPHIC INSPECTION

Except where amplified in this Specification, the extent of radiography shall be as specified on the vessel data sheets and in accordance with ASME VIII Division-1. Examination methods shall be in accordance with ASME Section VIII Division 1.

3 When 100% radiography is specified, radiography shall be done for all weld joints. Where radiography is considered to be impractical, ultrasonic inspection may be substituted with prior approval of the company.

For vessels requiring radiography where heat treatment is required, the radiography must be carried out after heat treatment. The Contractor may at his discretion carry out radiography prior to heat treatment.

The Company's appointed inspector shall see all radiographs and shall be advised of any defects found in any welds.

10.3 ULTRASONIC INSPECTION

Ultrasonic inspection may be substituted for radiography with prior approval of the company in areas that are inaccessible for radiography. Ultrasonic examination and acceptance criteria shall be per ASME code section VIII, Division 1. Appendix 12

For vessels requiring ultrasonic examination where heat treatment is required, the examination must be carried out after heat treatment. The contractor may, at his discretion carry out ultrasonic examination prior to heat treatment.

10.4 MAGENETIC PARTICLE AND DYE PENETRANT INSPECTION

Magnetic particle inspection shall be used on magnetic materials.

Dye Penetration inspection shall be performed on non magnetic materials

As a minimum, the following applies at all nozzles, man ways, and reinforcing pads.

- Load bearing fillet welds shall be inspected at root runs and finished welds by magnetic particle or dye penetration method
- All full penetration attachment welds shall be magnetic particle inspected at the back chipped surface and on all finished weld surfaces

- Crack detection of finished welds shall be carried out after hydro test and PWHT (where applicable)

- Magnetic particle inspection is preferred particularly after PWHT

10.5 ACCEPTANCE CRITERIA

The acceptance standard for non-destructive examination of welds shall be in accordance with the design code.

10.6 SUPPORT AND REINFORCING PAD INSPECTION

Welds of reinforcing pads shall be tested to 1.02 kg/cm^{2}g with dry air after fabrication (but prior to the hydrostatic test of the vessel) using suitable materials for the detection of leaks

10.7 HYDROSTATIC TESTS

Hydrostatic testing shall be in accordance with the provisions in ASME VIII and shall be carried out in the presence of the company's appointed inspector and a representative of the certifying authority.

Only fresh water shall be used for testing and Test water should also contain rust inhibitor such as Sodium Nitrate. For vessels manufactured from stainless steel, the chloride ion content of the test water shall not exceed 50ppm.

The metal temperature/temperature of vessel during hydrostatic test be maintained at 17^{0}C above the minimum design metal temperature, but need not exceed 48^{0}C to minimize the risk of brittle failure.

Adequate support shall be provided for vertical vessels tested in the horizontal position to ensure that they are not subjected to excessive local loadings and bending stresses.

Hydro test pressure shall be held for a minimum of 60 minutes per 25mm wall thickness up to 4 hours irrespective of design code requirements.

After the final hydrostatic test, vessels shall be drained and dried completely.

10.8 NAMEPLATE

Each complete vessel shall be provided with a type 316 stainless steel nameplate in accordance with ASME VIII securely attached to the vessel shell and located so that it is

clearly visible after installation, preferably near a manhole or inspection opening. Insulated vessels shall have nameplate brackets with enough projection to clear insulation by at least 25mm. The nameplate shall be stamped with the following:

- The company's equipment tag no.
- Manufacturer's company name
- Date of manufacturer
- Maximum Allowable Working Pressure, kg/cm^2 at temperature ^{o} C
- Hydro-test pressure, kg/cm^2
- Date Tested
- Design pressure, kg/cm^2
- Design temperature ^{o} C
- Erected weight, kg
- Purchase Order No.
- Corrosion Allowance
- Radio-graphy

10.9 REPORTS AND ACCEPTANCE CERTIFICATES

With regard to witnessed tests, the contractor shall prepare a report on the tests and results and this shall be included to the certification data books. All data books produced shall be complete and copies submitted to the company for review not later than 4 weeks after the date of satisfactory completion of the tests.

10.10 CERTIFICATION DOCUMENTS

All pressure parts material certification shall be traceable to heat numbers. Certificates, including all material certificates, fully catalogued and indexed NDT test records, mechanical test certificates, welding qualification certificates, heat treatment certificates and hydrostatic test certificates shall be available at final inspection and for counter signature by the certification authority and stored by the contractor for a minimum of 5 years after acceptance of the vessel by the Company. Pressure retaining parts shall be clearly marked to allow verification of traceability.

11.0 PAINTING AND PREPARATION FOR SHIPMENT

11.1 PAINTING AND PROTECTIVE COATINGS

Painting protective coating and the procedures used for the preparation of surface shall be specified in the Project Specification for Protective Coating (spec. 2005)

Where painting is specified, the entire vessel shall be painted, including inside any skirt, outside bottom head, the entire base ring and all skit, outside bottom head, the entire base ring and all skirt attachments. Nozzles shall be painted on the flange edges, inside bolt holes, and up to the gasket surface. Fireproofed or insulated surfaces shall be grit blasted and given one coat of primer only.

Stainless steel surfaces both inside and outside shall be pickled and passivated in accordance with specification ASTM-A380 after hydro-test. 3

11.2 PREPARATION FOR SHIPMENT

Preparation for shipment shall be as specified in the functional specification for packaged equipment.

11.3 SPARES 3

Following minimum commissioning spares shall be supplied:
Gaskets: Two sets for each installed gasket.
Fasteners: 10% (minimum two in each size) of installed fasteners.
Sight/Light glass: 2 sets for each installed glass.

ANNEXURE-1

MATERIAL OF CONSTRUCTION FOR UNFIRED VESSELS

Description of tank	MOC	Corrosion allowance (in mm.)	Lining / Cladding 3	Internal	Corrosion Allowance for Internals
1. Chemical Storage Tank					
a) Coagulant	CS*	3	Glass flake filled vinyl ester	As per vendor	As per vendor
b) Poly-electrolyte	CS*	3	Glass flake filled vinyl ester	As per vendor	As per vendor
c) De-foamer	SS-316	Nil	Nil	As per vendor	As per vendor
d) Oxygen Scavenger Injection	SS-316	Nil	Nil	As per vendor	As per vendor
e) Bactericide Injection -I	SS-316	Nil	Nil	As per vendor	As per vendor
f) Bactericide Injection –II	SS-316	Nil	Nil	As per vendor	As per vendor
g) Scale Inhibitor – I	SS-316	Nil	Nil	As per vendor	As per vendor
h) Scale Inhibitor – II	SS-316	Nil	Nil	As per vendor	As per vendor
i)Oil Corrosion Inhibitor	CS NACE	6	As per spec 2005	-	-
j) Glycol seal pot	CS	3	As per spec 2005	-	-
2. Solution Preparing Tank					
a) Coagulant	CS*	3	Glass flake filled vinyl ester	As per vendor	As per vendor
b) Poly-electrolyte	CS*	3	Glass flake filled vinyl ester	As per vendor	As per vendor
3. Mixing Tank					
a) Coagulant	CS*	3	Glass flake filled vinyl ester	Titanium or equivalent	0.5 mm on both sides
b) Poly-electrolyte	SS-316	Nil	Nil	SS-316 L	Nil
4. Oxygen Scavenging Reaction Tank / D.O. Tower	CS*	3	Glass flake filled vinyl ester	SS-316 L	Nil

5. Potable Water Tank	SS 316L	Nil	Nil	As per vendor	As per vendor
6. Sump Tank	CS*	3	As per vendor	As per vendor	As per vendor
7. Diesel Tank	CS*	3	Epoxy Coating	As per vendor	As per vendor
8. Separator / knock out drum	CS NACE	6	Glass flake filled vinyl ester Note-D	SS-316 L Note-D	Nil
		Nil	Incoloy 825 Note-E	DSS Note-E	As per vendor
9.Process Gas Scrubber	CS NACE	Nil	Incoloy 825	DSS	As per vendor
10. Fine Filter	CS*	3	Glass flake filled vinyl ester	As per vendor	As per vendor
11. Pot Water Filter	SS-316	Nil	Nil	As per vendor	As per vendor
12. Diesel Filter	CS*	3	Epoxy Coating	As per vendor	As per vendor
13. Air Receiver/Nitrogen Receiver/Breathing air Receiver	CS*	3	As per vendor	As per vendor	As per vendor
14. Crude condenser drum/Close drain drum	CS NACE	6	As per spec 2005	-	-
15. Instrument gas receiver	CS NACE	6	As per spec 2005	-	-
16. Day Tank	CS*	3	Epoxy Coating	As per Vendor	As per Vendor
17. Hot Oil Expansion Vessel	CS NACE	3	Epoxy Coating	As per Vendor	As per Vendor

3

3

NOTE:

(*) **Material of construction (MOC):**

A) for vessels shall be SA 516Gr70

B) for tanks shall be SA 283GrC/*SA 36*

C) for CS (NACE) , in addition to MR 01 75 requirement, sour service requirement as given in spec 2004 A shall be complied.

D) When connected to CS and CS (NACE) piping.

E) When connected to INCONEL and DSS piping. Cladding thickness shall be minimum 3 mm. 3

FUNCTIONAL SPECIFICATION FOR AIR COOLED HEAT EXCHANGER

Prepared / Revised By	Reviewed By	Approved By	Total No. of Pages	Date	Rev. No.
MS	BKC	PK	22	10.02.2022	2
BP	NM	AJ	20	08.11.2017	1
T. MITRA	SKG	JSS	20	16.02.2005	0

CONTENTS

1.0 INTRODUCTION
1.1 SCOPE
1.2 CONTRACTORS RESPONSIBILITY
1.3 PROVEN EQUIPMENT

2.0 STANDARDS AND CODES
2.1 CODES, STANDARDS AND REGULATIONS
2.2 PROECT SPECIFICATIONS

3.0 SCOPE OF SUPPLY
3.1 GENERAL
3.2 SCOPE OF SUPLY

4.0 ENVIRONMENTAL DESIGN CRITERIA
4.1 CLIMATIC AND PROCESS CONDITIONS
4.2 SERVICE CONDITIONS
4.3 AREA CLASSIFICATION

5.0 BASIC DESIGN
5.1 GENERAL
5.2 DESIGN LIFE
5.3 MOTOR & DRIVE
5.3.1 BELT Drives
5.3.2 GEAR BOS DRIVE
5.4 VIBRATION
5.5 FANS AND FAN HUBS
5.6 LOUVERS
5.7 HEADER
5.8 TUBE BUNDLE
5.9 TUBE
5.10 PIUGS FOR TUBE ACCESS
5.11 NOZZLE LOADING
5.12 NOZZLES AND PIPING
5.13 EXPANSION BELLOWS
5.14 STRUCTURAL
5.14.1 SUPPORTS
5.14.2 MECHANICAL ACCESS FACILITIES
5.15 MATERIALS

5.16 BOLTING, FLANGES AND GASKETS
5.17 FABRICATION AND WELDING

6.0 INSPECTION, TESTING AND CERTIFICATION
6.1 GENERAL
6.2 NON-DESTRUCTION EXAMINATION
6.3 TESTING
6.4 NAME PLATE

7.0 SPARE PARTS AND TOOLS

8.0 CONTRACTOR DATA REQUIREMENT
8.1 WITH PROPOSAL
8.2 AFTER ORDER PLACEMENT

9.0 PAINTING AND PREPARATION FOR SHIPMENT
9.1 PAINTING AND PROTECTIVE COATING
9.2 PREPARATION FOR SHIPMENT

10.0 WARRANTY

1.0 INTRODUCTION

1.1 SCOPE

This specification outlines the minimum requirements governing the thermal and mechanical design, manufacture, testing, packaging, guarantees and supply of Air-Cooled Heat Exchanger to be installed on offshore platform.

1.2 CONTRACTORS RESPONSIBILITY

The Contractor shall be responsible for the complete design, manufacture, supply, inspection, testing and documentation of the Air-cooled exchanger, including full compliance with all applicable, design codes / standards and with this Functional Specification.

1.3 PROVEN EQUIPMENT

The vendor shall have designed, manufactured, tested and supplied two (2) Air-Cooled Heat Exchanger sets of similar type, design and of equal or higher rating from the proposed manufacturing plant. Contractor shall provide evidence of satisfactory operation of at least 8000 hours for one of such unit when operating in similar service conditions in offshore areas.

2.0 STANDARDS, CODES AND FUNCTIONAL SPECIFICATIONS

2.1 CODES, STANDARDS AND REGULATIONS

As a minimum all equipment supplied as part of this package shall be designed, manufactured, tested and delivered in accordance with this specification, latest edition of relevant sections of the national/ international codes, standards and regulations listed below.

ASME BPVC-II	SECTION II: MATERIALS
ASME BPVC-V	NONDESTRUCTIVE EXAMINATION
ASME BPVC-VIII-1	SECTION VIII - RULES FOR CONSTRUCTION OF PRESSURE VESSELS DIVISION 1
ASME BPVC-IX	SECTION IX - WELDING, BRAZING, AND FUSING PROCEDURES; WELDERS; BRAZERS; AND WELDING, BRAZING AND FUSING OPERATORS
ASME B16.5	Pipe Flanges and Flanged Fittings NPS ½ Through NPS 24 Metric/Inch Standard
ANSI B16.11	Forged Fittings, Socket-Welding and Threaded
ASME B31.3	Process Piping

ASME B16.20	Metallic Gaskets for Pipe Flanges
API RP 500	Recommended Practice for Classification of Locations for Electrical Installations at Petroleum Facilities Classified as Class I, Division 1 and Division 2
API STD 661 / ISO 13706	Petroleum, Petrochemical, and Natural Gas Industries - Air-cooled Heat Exchangers
ASTM A106/A106M	Standard Specification for Seamless Carbon Steel Pipe for High-Temperature Service
ASTM A193/A193M	Standard Specification for Alloy-Steel and Stainless Steel Bolting for High Temperature or High Pressure Service and Other Special Purpose Applications
ASTM A450/A450M	Standard Specification for General Requirements for Carbon and Low Alloy Steel Tubes
ABMA STD 11	American Bearing Manufacturers Association (Load Ratings and Fatigue Life for Roller Bearings)
ABMA STD 9	American Bearing Manufacturers Association (Load Ratings and Fatigue Life for Ball Bearings)
NACE MR0175	Petroleum, petrochemical, and natural gas industries - Materials for use in H2S-containing environments in oil and gas production
NACE MR0103/ISO 17945	Petroleum, petrochemical and natural gas industries - Metallic materials resistant to sulfide stress cracking in corrosive petroleum refining environments
ISO 21940-11	MECHANICAL VIBRATION - ROTOR BALANCING - PART 11: PROCEDURES AND TOLERANCES FOR ROTORS WITH RIGID BEHAVIOUR
ISO 21940-14	MECHANICAL VIBRATION - ROTOR BALANCING - PART 14: PROCEDURES FOR ASSESSING BALANCE ERRORS
TEMA	Tubular Exchanger Manufacturing Association

2.2 PROJECT SPECIFICATIONS

The heat exchanger covered by this Specification shall also be designed, manufactured and tested in accordance with the requirements of the following ONGC functional specifications and relevant specifications given elsewhere in Bid Package.

SPEC NO	DESCRIPTION
5002	Specification for Equipment Noise Limit
5100	Functional Specifications for Packaged Equipment
5601	Functional Specification for Unfired Pressure Vessels
2004-A	Functional specification for Piping Design
2004-B	Functional specification for Piping Fabrication and Installation
2005	Specification For Protective Coating
2006	Functional Specification for Insulation of Piping and Equipment
2009F	Functional Specification for Welding and NDT
3503	Functional Specification for Instrumentation for Equipment Package

The contractor shall ensure that the Scope of Work is executed in accordance with all mandatory Indian Statutory requirements.

3.0 SCOPE OF SUPPLY

3.1 GENERAL

The scope of supply shall set forth the minimum acceptance standards governing the thermal and mechanical design, manufacture, supply of material, fabrication, inspection, guarantee, testing and delivery of Air-Cooled Exchangers.

3.2 SCOPE OF SUPPLY

The contractor shall supply Air-Cooled Heat Exchanger of suitable capacity as per process parameters given elsewhere in Bid Package. Also for details on the gas composition refers the process design criteria. The scope of supply for Air-Cooled Heat Exchanger shall include, but not limited to the following:

- Complete thermal and mechanical design.
- Finned tube bundles.
- Box type headers with removable end plugs.
- Cooling fans with drive and anti-autorotation devices.
- Fan ring, plenum chambers and guards.
- Fan vibration switches.

- Third party Design Verification and Code Inspection, if applicable.
- Support structure with lifting lugs-necessary arrangements for handling, supports, alignment, ladders and platforms etc.
- Earthing bosses.
- Accessories and instrumentation within the package limits and other relevant details (to be confirmed during detailed engineering).
- Spare parts necessary for start-up, commissioning.
- Priced list of spares for one year operation.
- Two sets of any special tools required for maintenance.
- Documentation requested in this specification.
- VSD for temperature control, if applicable.

4.0 ENVIRONMENTAL DESIGN CRITERIA AND UTILITIES

4.1 CLIMATIC AND PROCESS CONDITIONS

The climatic and other conditions under which the Equipment will operate are detailed in Section 3.1 Vol II under General Design Criteria and in Section 3.1 Vol II under Process Design Criteria. The equipment will be operated in continuous outdoor offshore condition.

The Contractor is responsible for ensuring that all equipment and components provided are suitable for the utility and environmental conditions as specified elsewhere in the bid.

4.2 AREA CLASSIFICATION

Electrical aspect of the equipment will be rated for the applicable Hazardous Area classification according to API RP500 definitions.

5.0 BASIC DESIGN

5.1 GENERAL

The heat exchanger shall be forced draft with extended surface (finned) tubes.

The design of the equipment shall be mainly in accordance with API Standard 661 and ASME Section VIII, Div.1. ASME 'U' Code Stamps are required. The vendor shall completely fill up the data sheet as per API 661(latest edition) and submit it for Company's review and approval.

The thermal and mechanical requirements will be specified on the air-cooled exchanger data sheet.

Each fan shall have an individual plenum chamber to prevent recirculation of air through idle fans. The structure shall be designed to provide full air distribution over the entire heat transfer surface. Expanded removable guards are required over all fan openings. Plenum chambers, hoods, fan guards and similar ancillary equipment shall be hot dipped galvanized.

The fan noise emission shall not exceed that required in Spec no 5002.

Flow induced vibrations must be considered and the contractor shall be responsible for submitting proposed methods of eliminating vibration damage. These shall be substantiated by calculations.

For instrumentation and controls, refer spec no. 3503 - Instrumentation for packaged equipment.

Refer Electrical Design Criteria for electrical utility available.

Heat conservation and personal protection for exchangers must be considered and meet the requirements of functional Specification for Packaged Equipment 5100.

Contractor shall provide the following information:

- Gasket details shall include the manufacturer's name
- Header details, including wall thickness, dimensions, materials, component details, the actual corrosion allowance available and the amount of increased header thickness where used for nozzle reinforcement shall be supplied

5.2 SERVICE CONDITIONS

The Equipment shall be designed and constructed for at least five years of uninterrupted operation.

The vendor shall confirm and submit undertaking of minimum availability of 95%

Vendor may assume that the spares holding is in accordance with their submitted recommendations unless otherwise stated.

5.3 MOTOR & DRIVE

Electric motors shall meet the requirement of relevant ONGC Specifications FS 4008. If variable speed drive (VSD) is required, the motor and VSD shall be matched.

Enclosures, cooling fans and fan blades for electric motor drives shall be manufactured from corrosion resistant materials or be appropriately protected for operation in an aggressive salt laden environment.

A locking stop switch or button for the fan drive shall be installed adjacent to the appropriate electric motor to act as an emergency local stop and a lock out device for maintenance work.

5.3.1 BELT DRIVES

Drive shall be by gear if specified in the equipment functional specifications If not specified elsewhere Multi “V” Belt can be provided. Belts shall be certifiable static – conducting type. The electric motor drive end bearing housing shall be fitted with a suitable seal to prevent ingress of water and dirt, with at least the same L_{10} life as the bearing.

All V-belts, bearings, drive shafts, gears and shaft coupling, etc shall be conservatively rated to ensure an adequate service life when rated on continuous 24 hour per day basis. To allow re-lubrication while the equipment is operating, greasing points shall be outside any equipment guarding and safely accessible from a stable fixed platform.

All adjusters and fasteners associated with V belt tensioning and drive component alignment shall be suitable corrosion resistant stainless steel. The V belt tensioning and securing arrangements shall external to the equipment guarding and allow safe adjustment while the fan is operating.

Fan and fan drives shall be fitted with suitable removable guards of non-sparking material. Equipment guarding shall allow the drive train components, e.g. belts and pulleys, to be safely observed during operation without disturbing the guarding. Guards shall be manufactured in non-sparking materials. Aluminium is not acceptable.

Individual sections of guards weighing more than 50 KG shall be hinged to the cooler structure, and provided with suitable lifting lugs.

Motor enclosures and their fans shall be constructed of materials that will be suitable for operation in an aggressive marine environment.

V-belt drives are envisaged. One extra set of belts shall be provided for each fan.

5.3.2 GEAR BOX DRIVE

Gear boxes shall be provided with an external oil level indicator visible from the maintenance platform. Gear box shall have minimum service factor 2 as per AGMA Standard. Clear space (free of piping) shall be provided for maintenance and removal of Gear-box.

5.4 VIBRATION

Coolers shall meet the vibration requirements detailed in Spec No 5004 in the bid. All motor rotors shall be dynamically balanced. A vibration signature shall be provided for motor and fan bearings during work testing. Vibration test points shall be clearly marked for future reference test and transducers shall be fitted at measuring points and suitably wired to location at local control panel for taking vibration measurement with a portable instrument.

Each fan shall be provided with a vibration cut- out switch installed on the fan shaft bearing housing to motor vibration due to fan imbalance and/or bearing wear/failure. Upon reaching shut down vibration levels, the unit control will shut down the fan and lock it out, the switch shall be accessible when the fan is running.

The vibration cut- out switch shall be manual –reset type, range 0-2g, SPDT contacts for 230 V, 50Hz, housed in an enclosure rated for the hazardous area classification.

The vibration switch set-point shall be adjustable over at least ±50% of the Contractor's recommended set point expressed in vibration units (mm/s^2).

Certified flameproof inertia switches suitable for installation in hazardous area classification shall be provided. The detector and switch shall be installed in such a manner that excessive fan vibration will cause automatic shutdown trip and require local manual reset.

5.5 FANS AND FAN HUBS

Fan shall be multi blade type. Fan hubs shall be dynamically balanced and blades match balanced. Balancing shall be undertaken to the requirements of ISO 1940 grade G 6.3 as a minimum.

Wherever temperature control is required on the unit, this shall be achieved by the use of variable speed drive (VSD) on the motor. Variable pitch fans or automatic louver control shall not be permitted.

Performance curves for the fan shall be advised with the offer.

Each pneumatic fan hub actuator shall be equipped with a positioner (refer 7.2.3.11 of API 661).

5.6 LOUVRES

Although, VSD is required for temperature control of the unit, however, in case bid document specifies louvers to be used for temperature control, it should be of opposed action type. Upon loss of control of air pressure, the louver blade position shall adjust to fully open.

5.7 HEADER

The header shall be of the shoulder plug type, fitted with hexagon type heads. Threaded access holes shall be large enough to provide adequate clearance for the normal operation of a roller or similar type tube end expander, without undue risk of damaging the plug hole threads. Tube access header plug material shall be compatible with the header material. Cast iron shall not be used for plug material.

All main header longitudinal and end closure seams shall be full penetration welds.

The minimum thickness of partition plates or stiffening plates inside headers shall be that thickness required for strength, plus twice the specific corrosion allowance or 12.5 mm, whichever is greater.

The minimum corrosion allowance shall be 3 mm, unless the header box is fabricated from corrosion resistant alloys.

Partition and stiffener plates shall be welded from both sides, along their full length. Full penetration welds shall be used and the weld grooves completely filled. Welded header pass partitions and stiffeners shall be of the same material type as the header plate. In case of partition/end plate welds only, where the end plates are designed to be self-supporting, i.e. excluding the supporting influence of the partition plate, continuous seal welding both sides may be used. The attachment welds for partition plates and stiffeners shall not interface with the tube holes, or plug holes where applicable.

The top and bottom plate of all headers shall be provided respectively with one vent and one drain connection. Connection shall be 25 NB flanges in accordance with the relevant pressure class of ASME B 16.5 Nozzle flange bolt holes shall straddle vertical and longitudinal centre lines. Nozzles shall project 200 mm minimum from the header surface.

The Contractor shall provide header details, including thickness, dimensions, component details, actual corrosion allowance available and the amount of increased header thickness if used for nozzle reinforcement.

For headers with removable cover plates and removable bonnets, bonnet headers are not acceptable.

Cover plate attachments shall be obtained by through bolting.

5.8 TUBE BUNDLE

All heat exchangers shall have a surface area at least 10% greater than that required for the maximum thermal duty specified.

Each horizontal partition plate shall be provided with a 6 mm drain hole.

Passes in multi-pass units shall preferably be arranged so that inlet and outlet connections are at the same end of the section.

Air seal baffle minimum metal thickness shall be at least 3 mm.

5.9 TUBE

The design temperature shall not exceed 290 ^{0}C. for the (extruded –fin) tubes.
The maximum tube length shall be 12 M
The minimum wall thickness for DN 25 mm tubes shall be as follows:

- For carbon steel, Aluminium & Aluminium alloys: 2.8 mm
- For Copper & Copper alloys: 2 mm
- For High Alloy (Austenitic, Duplex steels and Monel): 1.7 mm

The number of fins shall not exceed 40 per 100mm

5.10 PLUGS FOR TUBE ACCESS

Plugs shall not be the recessed type.

Plugs shall be long enough to fill the plug sheet threads with a tolerance of □□1.5 mm □except for galling material.

5.11 NOZZLE LOADING

The Contractor shall give details on the general drawings, the resultant forces and moments that can be accommodated from pipe work system. The Contractor shall consider the force acting radially together with the moment acting either in longitudinal or circumferential direction.

5.12 NOZZLES AND PIPING

Nozzles shall conform to functional specification for Unfired Pressure Vessels (FS 5601).

Flange facing finish and pressure- temperature ratings shall comply with ASME B 16.5. Flange connections shall not be less than DN 50 mm.
Slip on flanges are not permitted. Flanged connections DN 80 and smaller shall be ANSI 300# rating (min).

Thermowell connections shall be made with horizontal DN 25 NPS 6000# couplings or threadolets. Pressure gauge connections shall be made with ¾" NPS horizontal 6000# couplings or threadolets.

The contractor shall supply the necessary piping to provide a single outlet and a single inlet for each process stream if several nozzles are provided in a header. The piping manifold design shall be submitted to the Company for acceptance prior to fabrication.

5.13 EXPANSION BELLOWS

Expansion bellows are not acceptable.

5.14 STRUCTURAL

Dynamic loadings shall be considered in the design of exchanger, including support saddles. It shall include wind load, seismic load and other applicable loads.

A minimum 4 lifting lugs shall be provided to allow a single point lift. Safe working load calculations shall be supplied by the contractor for the lugs, allowing for a factor safety of 2.5,

against allowable stress for the lugs, based on the full load being carried on two lugs. A Dynamic lift factor of 2.0 shall be utilized. All lifting lugs are to be attached by full penetration welds.

5.14.1 SUPPORTS

Heat exchanger shall be supported on a sub-base that will be designed to facilitate welding to the platform deck or structure. Dynamic loadings shall be considered in the design of exchangers, including support saddles.

The Contractor shall provide in their design means of accommodating thermal expansion and contraction. Support shall accommodate thermal expansion by preferably using a non-corroding “slotted hole” sliding arrangement.

Structural supports, including those that are part of the tube bundle and bed plates shall be hot-dip galvanized.

Each heat exchanger shall be provided with two earthing bosses, welded to the heat exchanger support saddles. Structural supports, including those that are part of the tube bundle and bed plates shall be hot-dip galvanized.

All external attachments, including the complete supports and saddle plates, shall be sealed against corrosion by continuous welding.

5.14.2 MECHANICAL ACCESS FACILITIES & MAINTENANCE

For safe operation, inspection and maintenance activities, walkways, access ways, ladders and platforms shall be provided. Specifically, access to allow rodding of all tubes from each end, removal of bundle, access to the motor drives, fan bearings, upper fan enclosure, fan hubs, instruments and valves shall be provided. Service decking or platform shall allow safe access for motor or fan removal from under the plenum to a location that can be accessed by a suitable crane/lifting device. Design shall ensure all drains, vents, filling & adjusting points are readily accessible and that no major of component is required when carrying out routine maintenance activity.

Where the elevation of the bottom of the header is higher than 2 meters, the Contractor shall provide platforms supported from exchanger structure to give access to the inlet and outlet headers. The Contractor shall provide one ladder to each header platform

Heat exchangers shall be designed and located such that they can be removed or serviced without disturbing pipe work. All the air cooler components shall be designed in such a manner that they can be maintained and lubricated (if required) from the maintenance platform without dismantling or shutting the complete equipment. All lubrication points shall be accessible from the maintenance platform. Vendor to provide necessary SS tubing for the same.

Suitable material handling equipment shall be provided for maintenance and replacement of the unit.

5.15 MATERIALS

The Heat Exchanger shall be suitable for operation in outdoor conditions, in a corrosive salt laden offshore environment with100% relative humidity.

All materials shall be suitable for process fluids and for the environment conditions specified elsewhere in bid. All materials and parts included in the construction of the specified Heat Exchangers shall be new, unused and of the highest grade, being free from all defects or imperfections likely to affect their performance.

All carbon and low alloy steel component / assembly shall be post weld heat treated.

Pressure-retaining components shall be supplied with a certified material test report (CMTR). Cast iron headers are not acceptable. Fin material shall be aluminum, unless otherwise specified. All components except the fin tubes shall be galvanized.

All forgings shall be 100% ultrasonically tested.

5.16 BOLTING, FLANGES AND GASKETS

Bolts and nuts shall be furnished by the Contractor for all cover plates, manholes, blind flanges and bolted attachments supplied with heat exchangers. Bolt and nuts shall be new.

Heat exchanger flanges shall be equipped with alloy steel stud bolting of appropriate grade. Stud bolts shall have full continuous thread and be long enough to extend one and three thread lengths outside each nut.

Flanges material shall be of similar specification to the associated heat exchanger part, including impact properties. Girth flanges shall be of integral tapered hub type. Jack screw shall be provided for all girth flanges.

Gaskets shall be furnished by the Contractor for all bolted attachments i.e. cover-plates, manholes and blind flanges supplied with heat exchangers. Gasket shall be in accordance with ONGC Specification No.2004-A for Piping Material**.**

The requirements for Charpy V-notch Impact Testing shall be in accordance with pressure vessel code.

5.17 FABRICATION AND WELDING

Welding shall be in accordance appropriate codes and specifications as follows:

- Piping ASME B31.3
- Vessel/Exchangers ASME Section VIII Div. 1 and ASME Section IX
- AWS D1.1 for structural welding
- ONGC Spec. No. 2009F for Welding

The contractor shall submit proposed weld procedure, weld details and welding qualifications, for the company's review and approval prior to commencing any production welding.

A "weld Plan" shall be prepared for each item, which shall include an outline drawing identifying all welds relating to each welding procedure.

Contractor shall ensure the adequacy of alignment between adjacent welds. Due account shall be taken of differential stresses resulting from heat treatment.

6.0 INSPECTION, TESTING AND CERTIFICATION

6.1 GENERAL

Inspection and testing shall be carried out at the Manufacturer's work and shall be witnessed by the Company's authorized representatives and/or certifying agency, if required.

The responsibility for inspection rests with Contractor. However, the Company and their authorized representative reserve the right to inspect the heat exchanger at any time during fabrication to ensure that materials and workmanship are in accordance with this specification, relevant codes and standards.

Contractor shall provide a projected shop schedule with appropriate fabrication stages at the time drawings are submitted for approval, they highlight the inspection activity schedule.

6.2 NON-DESTRUCTIVE EXAMINATION

All non-destructive examination shall be carried out in accordance with ASME Section V as a minimum. All personnel involved in non-destructive testing shall be qualified to a nationally recognized standard.

6.3 TESTING

Hydrostatic Test shall be carried out in the presence of Company's appointed inspector.

The equipment shall be hydro tested at maximum allowable test pressure of the equipment for at least the minimum duration as specified in the code.

6.4 NAME PLATE

Each complete heat exchanger shall be provided with a type 316 stainless steel nameplate securely attached to the shell, and located on that it is clearly visible after installation. Nameplate shall be riveted to a bracket welded onto the exchanger. The following information shall be added to the name plate:

Equipment Tag No., Manufacturer, Manufacturer's Serial No., Date of Manufacture, Date Tested, Exchange Surfaces (m^2), Operating Pressure (kg/c $m^{2)}$, Test Pressure (kg/c m^2), Max. Allowable Working Temperature (^{0}C), Max. Design Flow (kg/hr.), Corrosion Allowance, Erected Mass (kg).

Where required, insulation of heat exchanger shall be in accordance with ONGC Specification No. 2006 for Insulation given elsewhere in bid package.

7.0 SPARE PARTS AND TOOLS

The Contractor shall provide parts for initial startup and commissioning. A recommended parts list for one year's operation shall also be submitted. List shall include part number, part description, serial number and delivery lead time.

All spare parts furnished by Contractor shall be wrapped and packaged so that they will be preserved in original as-new condition under normal conditions of storage. Spare parts shall be properly tagged and coded so that later identification as to intended equipment usage will be facilitated.

They shall be packaged separately, clearly marked as “Spare Parts” and shipped at the time as the equipment. Package list shall be furnished so that the parts can be handled without uncrating if required.

The following shall be supplied as a minimum:

- 10% approx. spare stud bolts and nuts for each joint size, or a minimum of 4, except for bolts subject to hydraulic tensioning, where a complete set shall be included.
- Two spare sets of gaskets for all blanked connections, girth flanges and floating head connections.
- Two spare sets of drive belts.

8.0 VENDOR DATA REQUIREMENT

DOCUMENT TO BE FURNISHED BY VENDOR

Sl.No	Description	After Order Placement	
		For Company Approval / Review	With Eqpt. Data Book
I	II	III	IV
1.	Filled in data sheets	X	X
2.	Technical Literature/Catalogue	X	-
3.	Outline of skid with weight	X	X
4.	General arrangement drawing.	X	X
4.	Cross sectional drawings with part list and material of construction	X	X
5.	Utility requirements	X	X
6.	Thermal design calculations and Mechanical design calculations	X	X
7.	One-year priced spares list	X	X
8.	Commissioning spares	X	-
9.	Maintenance clearance diagram	X	X
10.	Assembly drawings with material specifications showing all the main welds, nozzles, manholes, internals etc.	X	X
11.	Material Test certificates	*	X
12.	Welding procedure and qualification records.	*	X
13.	Radiographic test reports.	*	-
14.	Installation, Operating & Maintenance Manual	-	X
15.	Heat treatment charts	*	X
16.	Inspection certificates, hydrostatic test reports and code test certificates.	*	X
17.	Copy of Nameplate	-	X
16.	Deviation List	X	-
17.	Reference List of Previous Installations	X	-
18.	Others as per ONGC Spec. 1060	-	X
19.	Spare Part Catalogue	-	X
20.	Fan and Louvres Performance	X	X

X = Data Required
* = Requirement at Inspection stage

SPECIAL NOTES ON VENDOR DATA REQUIREMENT FOR VENDOR TO COMPLY

1. Vendor to comply with the vendor data requirements listed herein.

2. The Vendor shall be held accountable for furnishing all data/drawings in proper form and quality in accordance with these requirements. The vendor shall also be accountable for the documentation required from his sub-vendor.

3. Each vendor data items requested above must be identified by the Purchase Order number and equipment tag number located on the cover sheet or first page of said item and in the case of engineering drawing on each and every drawing.

4. Any additional data/drawings required as a result of issuing supplements to a purchase order or during detailed engineering shall be furnished by Vendor and handled in the same manner as the original order.

5. All drawings and literatures shall be in the English language and in the Metric Measurement System.

9.0 PAINTING & PREPARATION FOR SHIPMENT

9.1 PAINTING AND PROTECTIVE COATING

Painting, protective coatings and the procedures used for preparation of surfaces shall comply with ONGC Specification No.2005 for Protective Coating given elsewhere in bid package.

Nozzles shall be painted on the flange edges inside bolt holes, and up to the gasket surface. Fireproofed or insulated surfaces shall be shot blasted and given one coat of primer only.

The Contractor shall stencil in a prominent position in 50 mm high character the dry lifting weight of the heat exchanger and for stress relieved and/or clad vessels the words “NO WELDING PERMITED”

9.2 PREPARATION FOR SHIPMENT

After final hydrostatic test, the air-cooled heat exchanger shall be dried and cleaned thoroughly of all grease, loose scale, rust, flux and weld spatter, both internally and externally.

All machined surfaces and thread connections shall be protected by coating with rust preventive.

Flanged openings shall be protected with steel plate covers attached by proper bolting or strapping and sealed with plastic compound.

Screwed connections shall be protected with threaded forged steel plug.

The contractor shall be responsible for loading and heat exchangers to prevent any damage during shipment.

When shipped loose, all instruments, valves parts etc. of a shell and tube heat exchanger shall be tagged with item number to facilitate installation in the field. Tags and wire shall be stainless steel.

10.0 WARRANTY

Vendor shall have final and total responsibility for the design and performance of all equipment furnished by him. Vendor shall warrant that the equipment furnished by him and the performance of the said equipment is in accordance with this specification and general codes.

Vendor shall warrant and guarantee that all the materials and equipment incorporated in the entire equipment under his Scope shall be new, and all work shall be of good quality.

Vendor shall also be responsible for all system and detailed designing, the aspects of which may not have been covered in this specification as regards the workmanship, performance etc., of the equipment supplied by him.

Vendor shall, upon notice from Company, make good at his own expense all defects found during the warranty period expeditiously.

Vendor shall, if required, supply the services of an experienced engineer to supervise the correction of any defects found during the warranty period.

Vendor shall also warrant and guarantee all work, materials and equipment furnished by any Sub-Vendor and which is incorporated in the Package.

THERMAL AND MECHANICAL GUARANTEES.

The thermal and mechanical design of heat exchangers shall be the responsibility of the vendor.

Thermal designs shall be completed using an internationally recognized software package such as HTRI, HTFS or equivalent. Design shall be approved by the company prior to the commencement of any fabrication.

Mechanical design calculations shall be completed using internationally recognized software such as PV Elite.

Vendor shall provide both the thermal and Mechanical guarantee for the equipment and shall be based on the process and mechanical conditions detailed in design criteria.

FUNCTIONAL SPECIFICATION

FOR

SHELL & TUBE HEAT EXCHANGER

Prepared / Revised By	Reviewed By	Approved By	Total No. of Pages	Date	Rev. No.
MS	BKC	PK	17	10.02.2022	2
BP	NM	AJ	18	01.01.2019	1

CONTENTS

1.0 INTRODUCTION
1.1 Scope
1.2 Contractor Responsibility
1.3 Proven Equipment
2.0 CODES AND STANDARDS
2.1 Codes, Standards and Regulations
2.2 Project Specifications
3.0 SCOPE OF SUPPLY
3.1 General
3.2 Scope of Supply
4.0 ENVIRONMENTAL DESIGN CRITERIA AND UTILITY
4.1 Climatic and Process Condition
4.2 Availability and Reliability
4.3 Area Classification
5.0 BASIC DESIGN
5.1 General
5.2 Service Conditions
5.3 Thermal and Mechanical Design Details
5.4 Fouling Factor
5.5 Nozzle Loading
5.6 Stacked Unit
5.7 Tube Bundle
5.8 Shell
5.9 Supports
5.10 Floating Head
5.11 Welding
5.12 Material
5.13 Bolting, Flanges and Gaskets
6.0 INSPECTION & TESTING
6.1 General
6.2 Non-Destruction Examination
6.3 Testing
6.4 Name Plate
7.0 SPARE PARTS AND TOOLS
8.0 CONTRACTOR DATA REQUIREMENT
8.1 With Proposal
8.2 After Order Placement
9.0 PAINTING AND PREPARATION FOR SHIPMENT
9.1 Panting and Protecting Coating
9.2 Preparation for Shipment
10.0 WARRANTY

1.0 INTRODUCTION

1.1 SCOPE

This specification outlines the minimum requirements governing the thermal and mechanical design, manufacture, testing, packaging, guarantees and supply of Shell & Tube Heat Exchanger to be installed on offshore platform.

1.2 CONTRACTORS RESPONSIBILITY

The Contractor shall be responsible for the complete design, manufacture, supply, inspection, testing and documentation of the Shell and Tube Heat Exchanger, including full compliance with all applicable design codes/ standards and with this functional Specification.

1.3 PROVEN EQUIPMENT

The Vendor shall have designed, manufactured, tested and supplied two (2) Shell and Tube Heat Exchanger sets of similar type, design and of equal or higher rating from the proposed manufacturing plant. Contractor shall provide evidence of satisfactory operation of at least 2 years or more for one of such unit when operating in similar service conditions in offshore areas.

2.0 CODES, STANDARDS, REGULATIONS AND FUNCTIONAL SPECIFIATIONS

2.1 CODES, STANDARDS AND REGULATIONS

As a minimum all equipment supplied as part of this package shall be designed, manufactured, tested and delivered in accordance with the relevant sections of the national/ international codes, standards and regulations listed below.

ASME BPVC-II	SECTION II: MATERIALS
ASME BPVC-V	SECTION V - NONDESTRUCTIVE EXAMINATION
ASME BPVC-VIII-1	SECTION VIII - RULES FOR CONSTRUCTION OF PRESSURE VESSELS DIVISION 1
ASME BPVC-IX	SECTION IX - WELDING, BRAZING, AND FUSING PROCEDURES; WELDERS; BRAZERS; AND WELDING, BRAZING AND FUSING OPERATORS
API RP 500	Recommended Practice for Classification of Locations for Electrical Installations at Petroleum Facilities Classified as Class I, Division 1 and Division 2
API STD 660	Shell-and-Tube Heat Exchangers

TEMA	Tubular Exchanger Manufacturing Association Class R
ASME B16.5	Pipe Flanges and Flanged Fittings
ASME B16.11	Forged Fittings (Socket Welded and Threaded)
ASME B16.20	Metallic Gaskets for Pipe Flanges
ASME B31.3	Process Piping
NACE MR0175	Petroleum, petrochemical, and natural gas industries - Materials for use in H2S-containing environments in oil and gas production
ASTM A150	Standard Specification for High Tensile Strength Carbon-Steel Plates for Fusion-Welded Vessel (Plates over 2 IN. to 4 IN., Inclusive, IN Thickness)
ASTM A193	Standard Specification for ALLOY-STEEL AND STAINLESS STEEL BOLTING MATERIALS FOR HIGH-TEMPERATURE SERVICE
WRC 107	Welding Research Council Bulletin No. 107 Local Stresses in Spherical and Cylindrical Shells Due To External Loadings
WRC 297	Welding Research Council Bulletin No. 297 Local Stresses in Cylindrical Shells Due to External Loadings on Nozzles-Supplement to WRC Bulletin No. 107

2.2 PROJECT SPECIFICATIONS:

The heat exchanger covered by this Specification shall also be designed, manufactured and tested in accordance with the requirements of the following ONGC functional specifications relevant specifications given elsewhere in Bid Package.

SPEC No.	Description
5002	Specification for Equipment Noise limit
5004	Specification for Equipment Vibration limit
5100	Functional Specification for Packaged Equipment
5601	Functional Specification for Unfired Pressure Vessels
2006	Functional Specification for Insulation of Piping & Equipment
2004-A	Functional Specification for Piping Design
2004-B	FS for Piping Fabrication and Installation

3503	Functional Specification for Instrumentation for Packaged Equipment
2005	Specification for Protective Coating
2009F	Functional Specification for Welding and NDT

3.0 SCOPE OF SUPPLY

3.1 GENERAL

The scope of supply shall set forth the minimum acceptance standards governing the thermal and mechanical design, manufacture, supply of material, fabrication, inspection, guarantee, testing and delivery of Shell and Tube Exchangers for offshore platform.

3.2 SCOPE OF SUPPLY

The contractor shall supply shell and tube type heat exchanger as per process parameters given elsewhere in Bid Package. Also for details on the gas composition, refer the process design criteria. The scope of supply for Shell & Tube Heat Exchanger shall include, but not limited to the following:

- Complete thermal and mechanical design
- Heat exchanger package
- Third party Design Verification and Code Inspection, if applicable
- Support structure with lifting lugs-necessary arrangements for handling, supports, alignment, ladders and platforms etc.
- Earthing bosses
- Accessories and instrumentation within the package limits (to be confirmed during detailed engineering)
- Spare parts necessary for start-up, commissioning and one year's operation
- Two sets of special tools, if any, required for maintenance.

4.0 ENVIRONMENTAL DESIGN CRITERIA AND UTILITIES

4.1 CLIMATIC AND PROCESS CONDITIONS

The climatic and other conditions under which the Equipment will operate are detailed in Section 3.1 Vol II under General design Criteria and Process Design Criteria. The equipment will be for outdoor and continuous operation on offshore platform.

The Contractor is responsible for ensuring that all equipment and components provided are suitable for the utility and environmental conditions as specified elsewhere in the bid.

4.2 AVAILABILITY AND RELIABILITY

The vendor shall confirm and submit undertaking of minimum availability of 95%. In making assessments of availability/reliability, the Supplier will need to estimate repair times. For the purpose of making such estimates, the supplier may assume that the spares holding is in accordance with its submitted recommendations unless otherwise stated. He may also neglect any delay caused by factors not directly related to the package in question unless a basis for estimating such delays is provided by the Purchase. In the case of failure modes which make a significant contribution to the overall unavailability, the supplier may be required to demonstrate that his assumed repair times can be achieved.

4.3 AREA CLASSIFICATION

Electrical aspect of the equipment will be rated for the applicable Hazardous Area classification according to API RP500 definitions. For Instrumentation items refer Instrumentation Design Criteria.

5.0 BASIC DESIGN

5.1 GENERAL

The design of the heat exchanger shall be in accordance with API 660, TEMA Class R and ASME VIII (latest edition). A process guarantee shall be provided, confirming that the heat exchanger will provide the maximum specified heat-transfer rate between the process streams within the heat exchanger.
The hot gas shall pass preferably through the Shell and cooling water shall pass through the Tube. The vendor shall completely fill up the data sheet as per API 660 and submit it for review and approval. For process parameters, refer process design criteria given elsewhere in the bid.

Where cladding is specified on the Data Sheet, the relevant sections of specification for Pressure Vessel (FS 5601) shall be met.

For instrumentation and controls, refer spec no. 3503 - Instrumentation for packaged equipment.

Heat conservation and personnel protection for shell and heat exchanger must be considered and meet the requirements of specification for Insulation No 2006 given elsewhere in Bid Package.

Flow induced vibrations must be considered and the Contractors shall be responsible for submitting proposed methods of eliminating vibration damage, which shall be substantiated by calculations.

The Contractor shall provide with their offer:

- A specification sheet detailing the number of cross baffles and their cross-flow velocities.
- An outline drawing showing the tube layout, indicating pass positions, cross baffle cut and orientation and the number of bypass sealing strips.
- Welding details and procedures and test procedures for strength welded tube to tube sheet joints.

5.2 SERVICE CONDITIONS

Equipment shall be designed and constructed for continuous operation and shall be designed for outdoor location, suited to corrosive salt laden, marine environment.

The Equipment shall be designed and constructed for at least five years of uninterrupted operation.

5.3 THERMAL AND MECHANICAL DESIGN DETAILS

For fixed tube sheet exchangers, the differential between the average shell metal temperature and the average metal temperature of any tube pass shall not exceed 28 ^{0} C.

The heat exchanger shall have a surface area at least 10% greater than that required for the maximum thermal duty specified.

Shell side and tube side velocities shall not fall into the laminar or transition flow range (i.e. Reynolds's number shall be greater than 4000).

For, bundles provided with baffle arrangement shall be designed to eliminate, as far as practical, dead fluid spaces and short-circuiting between adjacent passes within the limitations of the allowable pressure drop.

It is preferred that bellows type expansion joints not be used in exchanger shells.
Facilities shall be provided and the exchanger components arranged to facilitate high pressure water cleaning.

Shell and tube heat exchangers with bonnet type channels shall be provided with full diameter tube sheet and collar bolts.

All channels, channel covers and bonnets shall be provided with suitable lifting lugs attached by full penetration welds.

The Heat Exchanger shall be suitable for operation in outdoor conditions, in a corrosive salt laden offshore environment with100% relative humidity.

5.4 FOULING FACTOR:

Minimum fouling factor for a specific stream shall be the factors listed in the TEMA Standards.

The flow of corrosive or fouling fluids shall be through the tube side of heat exchangers. Tube bundles shall be removable to facilitate cleaning. Space for removal of tube bundles is also to be considered.

Notwithstanding the above, the exchanger shall be so designed so that the prevention of fouling is a prime consideration, particularly where the cooling medium is processed water. Design shall take into consideration exchanger configuration and fluid velocity as factors contributing to fouling of heat exchanger. Design shall also make provision for ease of draining and the cleaning of fouled tube bundles.

5.5 NOZZLE LOADING:

The Contractor shall give details on the general drawings the resultant forces and moments that can be accommodated on nozzles. These shall comply with ASME Section VIII Div I.

The Contractor shall consider the radial force acting together with the moment acting either in longitudinal or circumferential direction. The contractor shall ensure that the above loading will not induce unacceptable stress levels in the heat exchanger shell, head or channel, in compliance with ASME Section VIII Div I.

Nozzles shall conform to the functional specification for pressure vessels *(FS 5601)* with regard to specification, fabrication, reinforcement, testing and special requirements for clad openings. Nozzles shall be flanged and not be smaller than DN 50 mm.

5.6 STACKED UNITS

Stacked units shall be assembled and mounted in the shop to ensure a correct fit. Stacked units shall be tested in the fully assembled condition.

Mating flanges of stacked exchangers shall not be out of parallel by more than 1 mm measured across the gasket face.

Interconnecting nozzles of stacked units shall be fitted with spiral gaskets that contain a compression limiting ring.

Mating flanges of stacked exchangers shall not be out of parallel by more than 1 mm measured across the gasket face.

A single pack (per saddle/ support) of shims, 10 mm total thickness, shall be supplied with all stacked heat exchangers.

5.7 TUBE BUNDLE

Tube diameters and wall thickness shall conform to the TEMA preferred values, except that for exotic materials e.g. titanium, the wall thickness shall be subject to agreement with the Company.

The wall thickness of integral finned tubes shall be measured from the bottom of the groove. Straight tube length shall not exceed 6100mm. U tubes shall have a minimum bend radius 1.5 times the tube outside diameter.

All pipes and tubes used in the cooler shall be seamless. All U tubes shall be formed from a continuous length of tubing, free of girth welds.

Tubes, where the extreme fibre strain exceeds 5 percent, shall be heat treated. The proposed procedure for heat treatment shall be submitted to company for approval.

Tie rod maximum centers shall be 350 mm. The minimum number of *tie* rods shall be in accordance with TEMA requirements and the rod diameter shall be at least 12 mm. Tie rods shall be located all around the bundle periphery except for those acting as supports for impingement plates

Impingement plates shall be 10 mm (min) thickness and be rectangular in shape, the size to be based on nozzle diameter plus 50 mm. An additional impingement plate shall be provided for rotatable bundles.

Baffle sealing strips shall be the same material and thickness as the baffle and shall extend from edge of baffle to first tube.

Bundle runners shall be fitted to all removable bundles. Pulling eyes shall be fitted to the fixed tube sheet of all removable bundles.

The baffle cut shall be defined to suit the thermal design requirements and shall be V-notched top and bottom for vents and drain.

5.8 SHELL

The heat exchanger shall be code certified to meet the requirements of ASME Section VIII, Division 1.

The maximum shell diameter shall be limited to 1500 mm.

Framed heads shall be semi-ellipsoidal with 2:1 ratio unless otherwise specified. Cold formed heads shall not be used. All heads shall be normalized after forming.

5.9 SUPPORTS

Heat exchanger shall be supported on a sub-base that will be designed to facilitate welding to the platform deck or structure.

Support saddles shall be designed to withstand a horizontal force parallel to the axis of the heat exchanger of not less than 1.5 times the bundle weight.

Dynamic loadings shall be considered in the design of exchangers, including support saddles.

The Contractor shall provide in their design means of accommodating thermal expansion and contraction. Support shall accommodate thermal expansion by preferably using a non-corroding “slotted hole” sliding arrangement.

All external attachments, including the complete supports and saddle plate, shall be sealed against corrosion by continuous welding. Two ¼ inch NPT vent holes shall be provided in each external pad.

Each heat exchanger shall be provided with two earthing bosses, welded to the heat exchanger support saddles.

5.10 FLOATING HEAD

The design of the floating head assembly shall be as indicated in ASME Section VIII, Div. 1. The use of spacer ring is not permitted.

The cross over area between passes shall be equal to 1.3 times the total tube area in each pass.

The floating head bolting shall be readily accessible when the shell covers are removed. Floating-head cover bolting shall comply with TEMA and bolt spacing and clearances shall not be less than the minimum recommended by TEMA.

The minimum permitted bolt dia shall not be less than 20 mm.

Where 100% radiography of exchanger shells and/or channels are to be carried out, the floating head cover shall be attached to the flange by butt welding only. 100% Radiography of weld joint shall be done.

5.11 WELDING

Welding shall be in accordance relevant codes and specifications as follows:

- Piping ASME B31.3
- Vessel/Exchangers ASME Section VIII Div. 1 and ASME Section IX
- AWS D1.1 for structural welding
- ONGC Spec. No. 2009F for Welding

The contractor shall submit proposed weld procedure, weld details and welding qualifications, for the company's review and approval prior to commencing any production welding.

A "weld Plan" shall be prepared for each item, which shall include an outline drawing identifying all welds relating to each welding procedure.

Notwithstanding the requirements of the applicable code, production test plates shall be conducted on longitudinal shell seams and head seams (if any) where run –off tabs shall be used. This shall apply to heat exchangers with a design temperature below 0 ^{0} C and thickness greater than 25 mm. One production test plate shall be provided per exchanger for each weld procedure. Production test plates shall be subject to full mechanical testing in accordance with ASME Section IX.

Backing strips shall not be used. Heat exchanger shells shall contain one longitudinal weld only.

Welding procedure shall be confined to manual metallic arc, submerged arc and Tungsten Inert Gas unless otherwise approved by the company. Backing strips shall not be used.

Contractor shall ensure the adequacy of alignment between adjacent welds. Due account shall be taken of differential stresses resulting from heat treatment.

5.12 MATERIAL

All materials shall be suitable for process fluids and for the environment conditions specified elsewhere in bid.

Pressure-retaining components shall be supplied with a Certified Material Test Report (CMTR). All materials and parts included in the construction of the specified Heat Exchangers shall be new, unused and of the highest grade, being free from all defects or imperfections likely to affect their performance.

Non pressure part welded to pressure part shall be of boiler quality.
All forgings shall be 100% ultrasonically tested as per ASTM A-388.

5.13 BOLTING, FLANGES AND GASKETS

BOLTING
Bolts and nuts shall be furnished by the Contractor for all cover plates, manholes, blind flanges and bolted attachments supplied with heat exchangers. Bolt and nuts shall be new.

Internal bolting shall be SS 316 unless specified.

External alloy steel stud bolts shall be in accordance with ASTM A-193 Grade B7M. Nuts for external stud bolts shall be in accordance with ASTM A-194 Grade 2HM, unless otherwise specified. External bolts and nuts shall be protected against aggressive salty marine atmospheric corrosion according to the requirements of project specification

Stud bolts shall have full continuous thread and be long enough to extend one and three thread lengths outside each nut. Flange bolting of DN 36 MM and above shall be subject to bolt tensioning.

FLANGES
All flanges shall be as per ASME B 16.5. Flanges not covered by ASME B 16.5 shall be as per ASME B 16.47. Flanges material shall be of similar specification to the associated heat exchanger part, including impact properties.

Girth flanges shall be of integral tapered hub type. Jack screw shall be provided for all girth flanges

GASKETS
Gaskets containing asbestos are not permitted. Metal windings of spiral-wound gaskets shall be of austenitic stainless steel. Where materials of construction are a higher alloy, then the metal windings shall be the same alloy material.

Gaskets shall be furnished by the Contractor for all bolted attachments i.e. cover-plates, man ways and blind flanges supplied with heat exchangers. Gasket shall be in accordance with ONGC Specification No.2004-A for Piping Material.

IMPACT TEST REQUIREMENTS

The requirements for Charpy V-notch Impact Testing shall be in accordance with ASME VIII, Division 1, Clauses UG 84 and UCS66.

6.0 INSPECTION, TESTING AND CERTIFICATION

6.1 GENERAL

Inspection and testing shall be carried out at the Manufacturer's work and shall be witnessed by the Company's authorized representatives and/or certifying agency, if required.
The responsibility for inspection rests with Contractor. However, the Company and their authorized representative reserve the right to inspect the heat exchanger at any time during fabrication to ensure that materials and workmanship are in accordance with this specification, relevant codes and standards.
Contractor shall provide a projected shop schedule with appropriate fabrication stages at the time drawings are submitted for approval, they highlight the inspection activity schedule.

6.2 NON-DESTRUCTIVE EXAMINATION

All non-destructive examination shall be carried out in accordance with ASME Section V as a minimum. All personnel involved in non-destructive testing shall be qualified by a nationally recognized standard.

Clad tube sheets shall be ultrasonically tested, procedure and defect levels being agreed with the company prior to award of contract.

6.3 TESTING

After completion of assembly, the equipment shall be hydro tested at maximum allowable test pressure of the equipment for at least the minimum duration as specified in the code. Testing shall be done by pressurizing each side separately.
Hydrostatic test shall be carried out in the presence of the Company's appointed Inspector.

Where necessary, test rings for confined tube sheets and testing rigs for floating tube sheets shall be supplied for completion of adequate shop testing. All such equipment, including studs and nuts where necessary, shall become the property of the company and is clearly marked by stamping with the equipment tag number.
Test rings shall be designed to the higher of the two test pressures, with an allowable design stress of 90% of the yield stress at the test temperature.

6.4 NAME PLATE

Each complete shell and tube heat exchanger shall be provided with a type 316 stainless steel nameplate securely attached to the shell, and located on a surface, that it is clearly visible after installation. Nameplate shall be riveted to a bracket welded onto the exchanger. Following information shall be added to the name plate:

Equipment Tag No., Manufacturer, Manufacturer's Serial No., Date of Manufacture, Date Tested, Operating Pressure (kg/c $m^{2)}$, Max. Design Flow kg/hr.), Corrosion Allowance, Erected Mass (kg), Exchange surface (Shell/Tube) m2, Test Pressure (Shell/Tube) kg/cm2, Max. Allowable working Temperature (Shell/Tube) in degrees centigrade.

7.0 SPARE PARTS AND TOOLS

The Contractor shall provide parts for initial startup and commissioning. A recommended parts list along with price for one year's operation shall also be submitted. List shall include part number, part description, serial number and delivery lead time.

All spare parts furnished by contractor shall be wrapped and packaged so that they will be preserved in original as-new condition under normal conditions of storage. Spare parts shall be properly tagged and coded so that later identification as to intended equipment usage will be facilitated.

They shall be packaged separately, clearly marked as "Spare Parts" and shipped at the time as the equipment. Package list shall be furnished so that the parts can be handled without uncrating if required.

The following shall be supplied as a minimum:

10% approx. spare stud bolts and nuts for each joint size, or a minimum of 4, except for bolts subject to hydraulic tensioning, where a complete set shall be included.
Two spare sets of gaskets for all blanked connections, girth flanges and floating head connections.

8.0 CONTRACTOR DATA REQUIREMENT

Special notes on vendor data requirement for vendor to comply: -

1) Vendor to comply with the vendor data requirements listed herein.
2) The Vendor shall be held accountable for furnishing all data/drawings in proper form and quality in accordance with these requirements. The vendor shall also be accountable for the documentation required from his sub-vendor.
3) Each vendor data items requested above must be identified by the Purchase Order number and equipment tag number located on the cover sheet or first page of said item and in the case of engineering drawing on each and every drawing.

4) Any additional data/drawings required as a result of issuing supplements to a purchase order or during detailed engineering shall be furnished by Vendor and handled in the same manner as the original order.

5) All drawings and literatures shall be in the English language and in the Metric Measurement System.

DATA TO BE FURNISHED BY VENDOR

Sl. No.	Description	With PS (For Review/Approval)	As Built
I	II	III	IV
1.	Filled in data sheets	X	X
2.	Technical Literature/Catalogue	*X*	-
3.	Outline of skid with weight	X	X
4.	General arrangement drawing.	X	X
4.	Cross sectional drawings with part list and material of construction	X	X
5.	Utility requirements	X	X
6.	Thermal design calculations and Mechanical Design Calculations	X	X
7.	One-year priced spares list	X	X
8.	Commissioning spares	X	-
9.	Maintenance clearance diagram	X	X
10.	Assembly drawings with material specifications showing all the main welds, nozzles, manholes, internals etc.	X	X
11.	Material Test certificates	*	X
12.	Welding procedure and qualification records.	*	X
13.	Radiographic test reports.	*	-
14.	Installation, Operating & Maintenance Manual	X	X
15.	Heat treatment charts	*	X
16.	Inspection certificates, hydrostatic test reports and code test certificates.	*	X
17.	Copy of Nameplate	-	X
16.	Deviation List	*X*	-

17.	Reference List of Previous Installations	*X*	-
18.	Others as per ONGC Spec. 1060	-	X
19.	Spare Part Catalogue	-	X
	X = Data Required *=Requirement at Inspection stage	-	X

9.0 PAINTING & PREPERATION FOR SHIPMENT

9.1 PAINTING AND PROTECTIVE COATING

Painting, protective coatings and the procedures used for preparation of surfaces shall comply with ONGC Specification No.2005 for Protective Coating given elsewhere in bid package.

Where painting is specified, the entire heat exchanger shall be painted. Nozzles shall be painted on the flange edges inside bolt holes, and up to the gasket surface. Fireproofed or insulated surfaces shall be shot blasted and given one coat of primer only.

The Contractor shall stencil in a prominent position in 50 mm high character the dry lifting weight of the heat exchanger and for stress relieved and/or clad vessels the words “NO WELDING PERMITED”

9.2 PREPARATION FOR SHIPMENT

After final hydrostatic test, the shell and tube heat exchanger shall be dried and cleaned thoroughly of all grease, loose scale, rust, flux and weld spatter, both internally and externally.

All machined surfaces and thread connections shall be protected by coating with rust preventive.

Flanged openings shall be protected with steel plate covers attached by proper bolting or strapping and sealed with plastic compound.

Screwed connections shall be protected with threaded forged steel plug.

The contractor shall be responsible for loading and heat exchangers to prevent any damage during shipment.

When shipped loose, all instruments, valves parts etc. of a shell and tube heat exchanger shall be tagged with item number to facilitate installation in the field. Tags and wire shall be stainless steel.

10.0 WARRANTY

Vendor shall have final and total responsibility for the design and performance of all equipment furnished by him. Vendor shall warrant that the equipment furnished by him and the performance of the said equipment is in accordance with this specification and general codes.

Vendor shall warrant and guarantee that all the materials and equipment incorporated in the entire equipment under his Scope shall be new, and all work shall be of good quality.

Vendor shall also be responsible for all system and detailed designing, the aspects of which may not have been covered in this specification as regards the workmanship, performance etc., of the equipment supplied by him.

Vendor shall, upon notice from Company, make good at his own expense all defects found during the warranty period expeditiously.

Vendor shall, if required, supply the services of an experienced engineer to supervise the correction of any defects found during the warranty period.

Vendor shall also warrant and guarantee all work, materials and equipment furnished by any Sub-Vendor and which is incorporated in the Package.

THERMAL AND MECHANICAL GUARANTEES.

The thermal and mechanical design of heat exchangers shall be the responsibility of the Vendor.

Thermal designs shall be completed using an internationally recognized software package such as HTRI, HTFS or equivalent. Design shall be approved by the company prior to the commencement of any fabrication.

Vendor shall provide both the thermal and Mechanical guarantee for the equipment and shall be based on the process and mechanical conditions detailed in design criteria.

FUNCTIONAL SPECIFICATION

FOR

WASTE HEAT RECOVERY UNIT (WHRU)

Prepared / Revised by	Reviewed by	Approved by	Total No. of Pages	Date	Rev. No.
MS	BKC	PK	15	10-02-2022	2
BG	BKC	PK	15	22-09-2021	1
PLN	VBD	JSS	13	10-03-2010	0

CONTENTS

1.0 INTRODUCTION

2.0 APPLICABLE CODES, STANDARDS AND REGULATIONS

3.0 SCOPE OF SUPPLY

4.0 ENVIRONMENTAL DESIGN CITERIA

5.0 BASIC DESIGN

6.0 INSPECTION, TESTING & CERTIFICATION

7.0 SPARE PART & SPECIAL TOOLS

8.0 VENDOR DATA REQUIREMENT

9.0 PAINTING AND PREPARATION FOR SHIPMENT

10.0 WARRANTY

1.0 INTRODUCTION

1.1 Scope

This specification outlines the minimum requirements for design, materials, fabrication, testing, packaging, guarantees, preparation for shipment and erection of Waste Heat Recovery Unit (WHRU) in exhaust of gas turbine driven Turbo generators and gas turbine driven Process Gas Compressors for hot oil heating on offshore platform

This specification shall be read in conjunction with relevant process documents i.e. PFD, P&ID, Process datasheet, Process design criteria and other relevant design criteria.

1.2 Contractors Responsibility

The Contractor/Vendor shall be responsible for design, manufacture, supply, inspection and testing of the Waste Heat Recovery Units in accordance with this specification, codes / standards and functional Specifications listed in clause 2.0 of this specification.

1.3 Proven Equipment

The vendor shall have designed, manufactured, tested and supplied at least two (2) Waste Heat Recovery Unit sets of similar type, design and of equal or higher rating from the proposed manufacturing plant. At the time of submission of offer, the Vendor shall provide evidence of satisfactory operation of at least 2 years or more for one of such unit operating in similar service conditions in offshore areas.

2.0 APPLICABLE CODES, STANDARDS AND REGULATIONS

As a minimum all equipment supplied as part of this package shall be designed, manufactured, tested and delivered in accordance with the relevant sections of the national/ international codes, standards and regulations listed below:

ASME BPVC-II	SECTION II: MATERIALS
ASME BPVC-VIII-1	SECTION VIII - RULES FOR CONSTRUCTION OF PRESSURE VESSELS DIVISION 1
ASME BPVC-IX	SECTION IX - WELDING, BRAZING, AND FUSING PROCEDURES; WELDERS; BRAZERS; AND WELDING, BRAZING AND FUSING OPERATORS
AWS	American Welding Society

ASME B16.5	Pipe Flanges and Flanged Fittings
ASME B16.11	Forged Fittings (Socket Welded and Threaded)
NACE MR0175	Petroleum, petrochemical, and natural gas industries - Materials for use in H2S-containing environments in oil and gas production
ASTM	American Society for Testing and materials

The Waste Heat Recovery Units covered by this Specification shall be designed, manufactured and tested in accordance with the requirements of the following ONGC functional specifications, other relevant specifications (Mechanical Design criteria etc.) given elsewhere in Bid Package.

SPEC No.	**Description**
Vol II	Mechanical Scope of Work
Vol II	Design Criteria – Mechanical, Safety and Life Saving Equipment (Process Platform)
5002	Specification for Equipment Noise limit
5004	Specification for Equipment Vibration limit
5100	Functional Specification for Packaged Equipment
5501	Functional Specification for Gas Turbine
5404	Functional Specification for Process Gas Compressor (Gas Turbine Driven)
5601	Functional Specification for Unfired Pressure Vessels
5102	Functional Safety Specification
5101	Functional Specification for Safety Studies
5204	Functional Specification for Hot Oil Pump
Vol - II	Piping Design Criteria
2006	Functional Specification for Insulation of Piping & Equipment
2004-A	Functional Specification for Piping Design
2004-B	FS for Piping Fabrication and Installation
Vol - II	Instrumentation Scope of Work
Vol - II	Instrumentation Design Criteria
3503	Functional Specification for Instrumentation for Packaged Equipment
2005	Specification for Protective Coating
2009F	Functional Specification for Welding and NDT

3.0 SCOPE OF SUPPLY

3.1 General

As a part of the platform Waste heat recovery system, a waste heat recovery heat exchanger will be fitted into the exhaust of each gas turbine exhaust system. The scope of supply shall set forth the minimum acceptance standards governing the thermal and mechanical design, manufacture, supply of material, fabrication, inspection, guarantee, testing and delivery of Waste Heat Recovery Units.

3.2 Scope of supply

Contractor / Vendor shall supply all necessary equipment required for meeting the design & environmental conditions and to make complete and operable unit as per codes/standards and specification. The WHRE shall be convection tube bundle with hot oil on tube side. This shall include but not limited to the following:

- Waste Heat Recovery Exchanger
- Main and Bypass turbine exhaust stack (Integral or external type) with drain provisions.
- WHRU stack and Bypass stack (Integral or external type) with drain provisions.
- Complete thermal and mechanical design
- Expansion joints
- Diverter Valves including sliding sleeve type / Isolation Louvers (i.e. a damper in each duct)
- Tube bundle including tube supports
- Casing
- Ducting
- Exhaust silencer
- Support structure with lifting lugs - necessary arrangements for handling, supports, alignment, ladders and platforms etc.
- Earthing bosses
- Accessories and instrumentation within the package limits (to be confirmed during detailed engineering)
- Spare parts necessary for start-up, commissioning
- Special tools, if any, required for maintenance
- WHRU Inlet & outlet Transition Duct

4.0 ENVIRONMENTAL DESIGN CRITERIA

4.1 Climatic Conditions

The climatic and other conditions under which the Equipment will operate are detailed elsewhere in the bid. The equipment will be operated on an offshore platform. The Contractor shall be responsible for ensuring that all equipment and components provided are suitable for the operating and environmental conditions as specified elsewhere in the bid.

Unless otherwise specified, WHRU shall be designed for outdoor location, suited to corrosive salt laden, marine environment with 100 percent relative humidity and containing other corrosive constituents like H_2S. It is meant for continuous operation.

4.2 Service Conditions

Equipment shall be designed and constructed for continuous operation in outdoor offshore environment.

4.3 Area Classification

Electrical equipment shall be suitable for the applicable Hazardous Area. Classification as defined in the electrical design criteria for process platforms

5.0 BASIC DESIGN

5.1 General

The design shall be proven in practice, robust and reliable. Safety, ease of operation, inspection, maintenance, repair and cleaning are of major concern.

The WHRE shall be designed utilizing flue gases of gas turbine driven Turbo generators and gas turbine driven Process Gas Compressors as heating medium to heat the hot oil. The WHRU shall be designed to avoid excessive film temperatures. The Contractor shall ensure that fluid flow velocity profiles are limited by the maximum allowable film temperature of the hot oil to be used in order to avoid tube coking.

The Vendor shall design tube bundle to avoid any dead areas or areas where tubes are partially filled and ensure the WHRU tubes are capable of running dry before the first fill of the process hot oil into the system or after all traces of process hot oil has been completely flushed out to prevent hot oil coking inside the tubes whilst operating at full exhaust flow if required as per process.

The Contractor / Vendor shall specify the type of fins proposed including material, number

per mm and type of fixing to the tubes.

The Contractor / Vendor shall specify the thermal rating of the WHRU. If the Vendor uses computer programmes/ soft wares for sizing of the WHRU then it shall be either HTRI, HTFS or equivalent software validated by any reputed third party and validation report/ certificate & name of validation agency shall be furnished along with the design calculations.

Provisions shall be made in the Exchanger Product design and construction to facilitate ease of cleaning and tube replacement, if required. The coil bundle shall be free draining.

WHRU shall meet the requirement of ASME Section VIII Div-1.

5.2 Ducting

The Vendor shall provide all ductwork for the WHRU. The Vendor shall be responsible for design and supply of all supports and stiffening pads for the ducting. The minimum plate thickness shall be 5mm. The exhaust duct material will be suitable for the offshore environment and the turbine exhaust gas temperature and composition as specified by the Turbine vendor. Transition pieces between duct sections of different cross-sectional area shall be provided as necessary.

The Contractor / Vendor shall provide details of ductwork design and materials, type and fixing of insulation/refractory material with its offer including a general arrangement drawing. The Contractor / Vendor shall ensure all material are proven at the operating temperatures and gas composition specified by turbine vendor.

The Contractor / Vendor shall supply the T-junction section of the ducting complete with remotely controlled isolation louver / diverter valves. The Contractor/Vendor can also offer the option of Integral by-pass systems designed for splitting of the exhaust gas flow into the tube bundle and bypass circuit based on their standard proprietary design.

To accommodate thermal expansion of the duct, the Vendor or Contractor as the case may be, shall supply expansion joints. The preferred location of expansion joints shall depend on the WHRU configuration. The contractor shall provide details of the expansion joints with the offer.

The Contractor shall provide access hatches in the WHRU exhaust ducting to allow for inspection and maintenance of the unit. Platforms and ladders, where necessary to allow access to the hatches shall be provided.

The Contractor shall ensure its design will prevent water ingress into the ducting from monsoon rain during times when the turbine is shutdown. The Contractor shall provide a suitable drainage point (s) on the base of the ducting to allow drainage of any free water collected in the bottom of the duct.

The Contractor shall ensure all welded ductwork sections are gas tight. Each section of ductwork shall be leak tested at the ducting design pressure to ensure integrity of ducting sections.

5.3 Isolation Louver / Diverter Valve Assembly:

The Vendor shall provide isolation louver/ diverter valve assembly /isolation diverter sleeve and central plug assembly located inside the WHRU duct to function as integral or separate bypass duct arrangement based on their standard proprietary design. The valves may be louver or split butterfly type. Design of these valves/sleeve shall allow not more than 1% leakage and shall be able to withstand the specified Turbine exhaust gas temperature and full differential pressure across.

Valves may be actuated by either pneumatically using instrument air or electrically. Hydraulic actuators are not acceptable. The diverter valve actuator shall be rated to open valve against the pressure developed by full flow of the exhaust and shall be designed to develop twice the torque required to operate the dampers in worst case conditions.

Diverter valves/Sliding sleeve shall be designed such that the exhaust flow from the gas turbine cannot be shut off. In the event of a loss of air pressure to the actuator, the diverter sliding sleeve/ diverter valve shall move into the "fail-safe" position. Vendor shall provide mechanism to ensure the diverter valves fail in the “fail-safe” position. The mechanisms proposed shall be detailed in his offer.

In the event of a normal stop, malfunction, or activation of the platform’s emergency shutdown system, the unit shall safely shutdown with all valves in a “fail-safe” position with closed off and the bypass open.

Leakage through the diverter valve shaft seal shall be minimized and shall not exceed 1.0% at design conditions.

Isolation louvre / Diverter valves / sliding sleeve will modulate to maintain the required outlet temperature in the hot oil system. Isolation louvre / Diverter Valve / diverter sleeve position shall be instrumented using Position transmitters.

Normal control of the system shall be via a temperature transmitter in the hot oil piping which will provide the control signal to the DCS.

5.4 Additional Technical Requirements

The tubes and pipes shall be seamless and shall meet all the requirements of specifications.

The WHRU shall be fabricated, assembled and erected, meeting all requirements of specifications.

The tubes shall be adequately supported. Intermediate & end tube sheets shall be provided to take the bundle load. All the tube sheets shall be suitable for full turbine exhaust gas temperature.

The pressure parts shall be designed to take care of local loadings such as nozzle load etc.

The inlet/outlet header of WHRU shall have vent/drain connection to drain out the entire equipment.

WHRU shall be provided with suitable end covers, which shall be removable for maintenance. Size of this end covers shall be suitable for easy handling.

Shelf flats, retainer plates, guide vanes etc. shall be provided as required as per standard engineering practices. Material of these components exposed to hot flue gases shall be suitable for corresponding temperature.

Expansion joint shall be provided in the ducting to take care of any axial or transversal thermal expansion.

Ducting shall be fabricated in suitable length and necessary flanges etc. shall be provided for ease of erection and for any future maintenance.

All pressure part components shall be 100% radiographed in accordance with ASME requirements.

The pressure parts shall be post weld heat treated (PWHT) if required as per code. Procedure of PWHT shall be developed in line with code requirements in such a manner so as to avoid any distortions during PWHT.

All necessary access platform and staircase/ladder for approach to instrument/safety devices/provisions shall be provided.

All package instruments and controls shall confirm to FS-3503, Instrument design criteria, P&IDs and Project scope.

5.5 Material

The Contractor shall select the materials of construction to suit the fluid medium with which it is in contact and as per design conditions and shall be suitable for offshore service. The Contractor shall identify each component part and the proposed material, including minimum corrosion allowances, etc. Materials exposed to the flue gas (containing H_2S) shall confirm to the requirement of NACE MR 0175.

No asbestos or asbestos-based products shall be used.

Use of SA-515 plate material is not permitted.
Carbon content in CS materials shall be limited to 0.23% (max).

5.6 Welding

All welding shall be carried out by Vendor and shall be in accordance with the appropriate Codes and Specifications.

Other Project specification for Structural Welding and Inspection for Offshore Platforms enclosed with Contract /bid document.

Each weld procedure shall be covered by suitable procedure qualification tested in accordance with the requirements of ASME IX.

5.7 Protective Coating

All Carbon steel surfaces, piping, vessels, fittings, supports and structural steel skid shall be coated in accordance with Protective Coating, Specification No. 2005.

5.8 Insulation

Exterior casing and ductwork temperature shall be limited to below 54 ^{0}C (at maximum ambient temperature) at areas of the WHRU package that could be touched at normal operating duties otherwise external personal protection insulation shall be provided.

Other exterior areas surface temperature shall be limited to 200 ^{0}C, (area exposed to open air ventilation) otherwise means (such as insulation) shall be recommended and ensured by Vendor to lower the surface temperature.

All required insulation, shall be insulated in accordance with the Function specification for

insulation of piping and equipment- 2006.

5.9 Electrical

Electrical equipment and materials shall be in accordance with Functional Specifications of Electrical Equipment

5.10 Instrumentation

The selection and installation of instrumentation works shall meet the minimum requirements as defined in the Instruments Design Criteria and Project Specifications of Instrumentations given elsewhere in the bid document.

The controls/indications which are required to be connected to Company's Control Room shall be terminated in a junction box (with terminal strip) located at the edge of the skid.

6.0 INSPECTION, TESTING AND CERTIFICATION

6.1 General

Contractor/Vendor shall prepare Inspection and Test Plan (ITP), indicating inspection stages wherever required in accordance with Company provided Inspection Requirement Table (IRT), covering all relevant components, complete equipment / systems and submit it for review and approval by the company. Equipment will be subjected to Performance Testing where Performance/Process Guarantee have been stipulated. The Performance Test of the WHRU Package shall be in accordance with the procedure as defined in "Commissioning Procedure and Performance Tests" given elsewhere in the Bid Document.

Inspection and testing shall be carried out at the Vendor's works and shall be witnessed by the Company's authorized representatives and/or certifying agency.

Vendor shall carryout various test as per applicable Codes/Standards. Test Certificates shall be submitted for Company's review.

Company/its authorized representative or certifying agency shall have access to inspect the equipment at any stage during manufacture. During inspection, material certificates, shop test data, certificates for bought out components and other relevant information shall be furnished for company's perusal so as to ascertain that the specifications and quality are complied with.

Vendor/ Contractor shall give minimum 15 days prior intimation to the company regarding testing schedule.

7.0 SPARE PARTS & SPECIAL TOOLS

7.1 Spare parts

Contractor shall provide recommended spare parts list required for start-up, commissioning and one year's normal operation of equipment / package. While preparing recommended spare parts lists, the contractor shall follow the equipment manufacturer's recommendations and shall indicate long lead items and off-the-shelf items.

However, Contractor shall supply spares for commissioning and start up.

All spare parts furnished by the Contractor shall be wrapped and packaged to preserve the parts as in original condition. The same parts shall be appropriately tagged and coded so that later identification as to their intended equipment usage will be facilitated. All items supplied shall be packaged separately and clearly marked as "Spare Parts" and shipped with the equipment in accordance with the instruction from the Company. Packing lists shall be furnished complete and in detail so that parts can be handled without uncrating, should this be required.

Recommended spares should take into account related factors of equipment reliability, effect of equipment down-time upon production and safety, cost of parts and availability of equipment service facilities.

7.2 Tools

For all Equipment / Packages, Vendor shall furnish the list of special tools/ tackles required for assembly and maintenance. Such tools/ tackles shall be supplied by the vendor and shall form part of firm supply of Contractor. Unless specified otherwise, for multiple identical equipment / packages (2 or more), at least Two (2) sets of special tools and tackles shall be supplied. One set of special tools and tackles shall be supplied if the number of equipment/ packages is one.

All such tools shall be permanently tagged with stainless steel tag detailing specifying its description and where it is to be used. Any special drawings or instructions pertaining to use of such tools shall be included in the instruction manual.

8.0 VENDOR DATA REQUIREMENT

Vendor to comply with the Vendor Data Requirements listed herein for Information, Review & Approval by the Company The vendor shall also be accountable for the Documentation required from his sub-vendors. Refer ANNEXURE-I for the same.

9.0 PAINTING & PREPARATION FOR SHIPMENT

9.1 Protective Coating

Painting and protective coatings and the procedures for preparation for painting shall be as specified in the Functional Specification for Protective Coatings (FS-2005) or as per vendor's standard painting specification suitable for marine environment.

9.2 Preparation for Shipment

After final Testing and approval, the assembly shall be drained of water and dried.

Prior to shipment, all instrumentation and other equipment vulnerable to damage shall be disassembled and boxed separately for shipment.

All items shall be adequately packed and protected against damage during shipment. Each crate, bag or package shall be clearly identified with the purchase order number and identification symbol, and shall be securely fastened to the skid.

Exposed machined surfaces shall be coated with an easily removable heavy duty rust preventative.

All flanged opening shall be protected with steel plate covers attached by proper bolting and sealed with plastic compound.

All electrical control enclosures shall be appropriately plugged at entries and loaded with silica gel bags.

Screwed connections shall be protected with threaded forged steel plugs.

Contractor/Vendor shall state in the proposal their recommendations for long term storage (up to 12 months) for both indoor and outdoor storage in a marine environment.

Each item of equipment shall be checked for its suitability to resist horizontal and vertical forces during sea transportation. Where equipment is not adequate, brackets for attaching sea fastenings shall be provided by the Contractor.

10.0 WARRANTY

Vendor shall warrant the equipment furnished by him and the performance of the said equipment is in accordance with this specification, applicable codes /standards and

Regulations.

Vendor shall warrant and guarantee that all the materials and equipment incorporated in the entire equipment under his Scope shall be new, and all work shall be of good quality.

Vendor shall also be responsible for all system and detailed designing, the aspects of which may not have been covered in this specification as regards the workmanship, performance etc., of the equipment supplied by him.

Vendor shall, upon notice from Company, make good at his own expense all defects found during the warranty period expeditiously.

Vendor shall, if required, supply the services of an experienced engineer to supervise the correction of any defects found during the warranty period.

Vendor shall also warrant and guarantee all work, materials and equipment furnished by any Sub-Vendor and which is incorporated in the Package.

ANNEXURE - I

No.	Description	Along with Purchase Specification	Along with As-Built
1	Filled in data sheets	X	X
2	Deviation list	X	X
3	List of Installations of Similar system by vendor, with broad specifications.	X	X
4	GADs for WHRE with Design data, material specification and dimensional drawings	X	X
5	Overall skid size(s) & Weight(s)	X	X
6	Process flow diagrams (PFDs) including heat and mass balance and piping & Instrumentation Diagrams (P&IDs) of complete system and sub-systems with technical write-up on Operation and Control philosophy	X	X
7	List of Commissioning spares	X	X
8	List of recommended spares for one-year normal operation and maintenance	X	X
9	Brochure/Catalogue	X	X
10	Quality Assurance Plan / Inspection Test Plan	X	X

11	Thermal design calculations	X	X
12	Mechanical Design calculations	X	X
13	Instrument specification / catalogues	X	X
14	Utility requirements	X	X
15	Spare Part Catalogue		X
16	Installation, Operation & Maintenance Manual		X
17	Inspection and test reports*		X
18	Material certificates*		X
19	Welding procedure and qualification records.*		X
20	Radiographic test reports. *		X
21	Certificate for bought out items *		X
	X = Data Required *** =Requirement at Inspection stage**		

WHRU REPLACEMENT PROJECT

VOLUME – IIIB

OIL AND NATURAL GAS CORPORATION LIMITED
INDIA

INDEX

VOLUME III B

Volume No.	Section	Document Details
Volume III	IIIB	Functional Specification-Instrumentation
		Functional Specification-Electrical
		Inspection Requirement Table(IRT)
		Commissioning Procedure

Instrumentation Functional Specification

WHRU REPLACEMENT PROJECT

VOLUME – IIIB

OIL AND NATURAL GAS CORPORATION LIMITED
INDIA

INDEX

INSTRUMENTATION FUNCTIONAL SPECIFICATION

Sl. No.	FS No.	Description
1.	3200	Flow Switch
2.	3202	Flow Transmitter (Electronic)
3.	3204	Restriction Orifice Assembly
4.	3205	Orifice Meters
5.	3300	Temperature Gauge and Thermo well
6.	3301	Temperature Switch (Electrical)
7.	3302	Temperature Transmitter (Electronic)
8.	3400	Differential Pressure Gauge
9	3401	Pressure Gauge
10	3402	Pressure Switch (Electrical)
11	3403	Pressure Transmitter (Electronic)
12	3404	Current to Pneumatic Convertor
13	3500	Fire & Gas Detection System
14	3503	Instrumentation for Equipment Package
15	3507	Instrumentation Bulk Materials
16	3508	Instt Cables
17	3600	Hi-Lo Pilot Switch
18	3602	P / I Converter
19	3606	Air Filter Regulator
20	3700	Control Valve
21	3701	Pressure Relief Valve (PRV)

FUNCTIONAL SPECIFICATION FOR "FLOW SWITCH"

Prepared / Revised By	Reviewed By	Approved By	Total No. of Pages	Date	Rev. No.
Rakhi Gupta 30/3/2021	Gnandi 30.03.21.	S. Ravi Shankar 30.3.21	6	30/3/2021	3
RS	CNN	SRS	6	30.03.2021	3
VS	RS	GRP	4	18.02.2008	2
ET	RS	GRP	6	28.03.2007	1
ET	MC	AC	6	13.05.2003	0

CONTENTS

Clause No.	ITEM		Page No.
1.0	Scope of This Document		3
2.0	Codes and Standards		3
3.0	Scope of Supply		3
4.0	Flow Switch		3
	4.1	General	3
	4.2	Material	4
Annexure I	Material Selection chart		5
Annexure II	Typical Datasheet Format		6

1.0 SCOPE OF THIS DOCUMENT

This functional specification describes the essential design considerations for the selection of Flow Switch for the intended service.

2.0 CODES & STANDARDS

Reference Documents and Specifications:

a) Instrumentation Design Criteria
b) Basic Bid Work
c) Project P&IDs
d) Process Design Criteria/Instrument Process Data Sheets/Instrument List with Process Parameters

3.0 SCOPE OF SUPPLY

3

3.1 The quantity to be supplied and installed shall be as per the requirements indicated in the Basic Bid Work, P&IDs and approved Instrument Datasheets.

3.2 The vendor shall be responsible for the selection of the Flow Switch suitable for intended services, viz., fire water sprinkler systems, sump-caisson application etc. as per P&IDs, its procurement, tagging, packing, testing & calibration, preparation for shipment, along with accessories, spares, and assistance wherever required for its installation & commissioning at site. This FS shall be read in conjunction with the Instrument Design Criteria.

4.0 FLOW SWITCH

3

4.1 **General:**

4.1.1 The flow switch shall be Differential Pressure type/Thermal Dispersion type suitable for Class I Div. I, Group C & D hazardous area.

4.1.2 The contact rating of head mounted SPDT/DPDT hermetically sealed switch (potential free contact) shall be minimum 1 A for 24V DC power or 0.2A for 110V DC power. The rating shall be chosen for the application and interlock /alarm circuitry of the loop.

4.1.3 The flow switch shall have either internal/external set point adjustment with locking mechanism to avoid tampering.

4.1.4 Cable entry to the flow switch shall be ¾" NPTF. Two numbers of cable entry shall be provided. One cable entry shall be plugged with a plug suitable for the area classification.

4.1.5 Wherever thermo-wells are required for insertion type thermal dispersion probes, specifications shall be as per FS- 3302.

Vendor shall provide Wake Frequency Calculation for thermowell wherever used as per latest revision of ASME PTC 19.3 TW Standard (Thermowell Performance Test Codes).

4.1.6 Suitable environment protection shock-proof packaging shall be provided for Flow Switches to protect from damage during handling, installation and commissioning.

4.1.7 The enclosure for switches shall be Ex-d type and IP-65 rated.

4.1.8 Flow Switches shall have a repeatability of ±0.2% of range (for both rising and falling 'actuation').

4.2 **Material:**

4.2.1 The material requirements for Flow Switches shall in general be according to clause 3.6.4.5 of Instrumentation Design Criteria.

4.2.2 In general, the flow switch sensor material shall be suitable for the process conditions and shall be minimum SS 316. For water service, the sensor material shall be Monel.

ANNEXURE – I

3

Material Selection Chart for Flow Switches

S. No.	Piping Class	Flange	DP element/ Thermowell
1.	A1, B1, D1, E1, F1, XF1, F1, PA1, PB1, PD1, PE1, PXF1, PF1, A2, B2, D2, E2, XG1, A1H, A3, B3, A8 (EXCEPT WAT. INJ. SERVICE)	CARBON STEEL	SS 316
2.	INJECTION WATER SERVICE	CARBON STEEL	SS 316
3.	Sea Water/Untreated Produced Water	MONEL	MONEL
4.	A4, A6, A9, B9, D9, E9	SS316	SS316
5.	A5	MONEL	MONEL
6.	A7	TITANUM	TITANUM
7.	** A1N, B1N, D1N, E1N, F1N, XF1N, PA1N, PB1N, PD1N, PF1N, XG1N	SS316L/ SS 316	SS316L
8.	A10, B10, D10, E10, F10	SS316L	SS316L
9.	A11, B11, D11, E11, F11, PA11, PB11, PD11, PE11, PF11	HASTELLOY-C/ DUPLEX SS	HASTELLOY-C/INCONEL 625

[Note: All wetted parts shall conform to NACE MR-01-75 (Latest edition)]

ANNEXURE – II

Typical Data Sheet For Flow Switches

3

FLOW SWTICHES

UNITS: Liquid Flow: m^3/hr. Gas Flow – sm^3/hr. Pressure – Kg/cm^2g Temperature – °C Level/Length - M

GENERAL	1.	Tag Number					
	2.	Service					
	3.	P&ID No.					
	4.	Line Number					
	5.	Line Size (in)	Schedule				
	6.	Area Classification					
	7.	Certification					
	8.						
PROCESS CONDITIONS	9.	Fluid	State				
	10.	Flow Rate Min.	Normal	Max.			
	11.	Inlet Pressure Operating	Normal	Max.			
	12.	Temperature Operating	Normal	Max.			
	13.	Design Pressure Min.	Max.				
	14.	Design Temperature Min.	Max.				
	15.	Allowable Pressure Drop					
	16.	Operating Viscosity (Cp)					
	17.	Velocity					
	18.	Corrosive Content					
	19.	Vapor Pressure					
	20.	Specific Gravity at Operating Temperature					
	21.	Molecular Weight					
BODY/ELEMENT	22.	Switch type					
	23.	End Connection Size & Rating					
	24.	End Connection Facing & Finish					
	25.	Material - Body & Flange					
	26.	Material - Element					
	27.	Insertion Length (mm)					
SWITCH	28.	Type					
	29.	Output Type	Quantity / Form				
	30.	Contact Rating					
	31.	Power Supply					
	32.	Cable Entry Size	Quantity				
	33.	Enclosure Class/Rating					
	34.	Enclosure Material					
	35.	Load Type					
	36.	On flow increase – O/p Contact					
	37.	On flow decrease – O/p Contact					
	38.	Range					
	39.	Accuracy					
	40.	Repeatability					
	41.	Set Point					
	42.	Differential – Fixed/Adjustable					
	43.	Set Point Adjustment – Internal / External					
	44.	Response time					
OPTIONS	45.	Stainless Steel Tag Plate					
	46.	IBR-Certification					
	47.						
PURCHASE	48.	Manufacturer					
	49.	Model Number					
	50.	Remarks					

NOTES:

Vendor's Seal and Signature

FUNCTIONAL SPECIFICATION

FOR

"DIFFERENTIAL PRESSURE (DP) TYPE FLOW TRANSMITTER"

8

PREPARED/REVISED BY	REVIEWED BY	APPROVED BY	TOTAL NO. OF PAGES	DATE	REV. NO.
RAKHI SAXENA	YOGESH DUDANI		10	27.06.2022	8
RS	YD	SRS	10	27.06.2022	8
MD	ARD	KM	10	28.01.2016	7
MD	ARD	AKR	10	28.08.2012	6
MD	ARD	AKR	9	30.03.2011	5A
MD	ARD	AKR	9	16.07.2011	5
VS	SRS	GRP	8	18.02.2008	4
ET	RS	GRP	12	28.03.2007	3
AK	BK	GRP	12	31.08.2006	2
ET	MC	RK	12	23.06.2005	1
ET	MC	AC	12	25.08.2003	0

CONTENTS

CLAUSE NO.	ITEM		PAGE NOS.
1.0	Scope of This Document		3
2.0	Reference Documents and Specifications		3
3.0	Scope of Supply		3
4.0	Flow Transmitter Specifications		3
	4.1	General	3
	4.2	Sensor Type	4
	4.3	Material	4
	4.4	Accuracy	5
	4.5	Output Signal	5
	4.6	Repeatability	5
	4.7	Stability	5
	4.8	Enclosure Class	5
5.0	Manifold Specifications		5
Annexure-I	Multivariable Transmitter (MVT) with Flow Computation		7
Annexure-II	Flow Transmitter/ MVT – Material Selection Chart		8
Annexure-III	Typical Hook up diagram		9
Annexure-IV	Typical Datasheet for Differential Pressure (DP) Type Flow Transmitter/MVT		10

1.0 SCOPE OF THIS DOCUMENT

1.1 This functional specification along with datasheets, IDC, P&IDs and associated bid documents specifies the requirements for design, selection, sizing, testing, documentation and shipping of Differential Pressure (DP) type Flow Transmitter, its materials and accessories.

2.0 REFERENCE DOCUMENTS AND SPECIFICATIONS

8

a. Basic Bid Work
b. Design Criteria - Process & Instrumentation
c. Project P & IDs
d. Process Data Sheets for Instruments

3.0 SCOPE OF SUPPLY

8

3.1 The quantity to be supplied, installed and commissioned shall be as per the requirements indicated in the Basic Bid Work and approved P&IDs specific to the project.

3.2 The vendor shall be responsible for the selection and supply of the DP Type Flow Transmitter suitable for measurement range, accuracy, MOC & standard accessories including Quality valve manifold for its intended application.

3.3 The procurement, tagging, packing, testing & calibration, preparation for shipment, along with accessories, spares, and assistance wherever required for its installation & commissioning at site shall be Vendor's responsibility.

4.0 FLOW TRANSMITTERS SPECIFICATIONS

4.1 GENERAL

8

4.1.1 Flow Transmitters shall be of Differential Pressure (DP) type.

4.1.2 HART (Latest edition) type FT shall be SIL-2 Certified.

4.1.3 The transmitter shall be mounted local, on a yoke. All mounting accessories required for 2" pipe shall be provided.

4.1.4 Cable entry to the transmitter shall be ½" NPTF.

8

4.1.5 The transmitter shall have 130% (static pressure) over-range protection for each port (upstream & downstream).

4.1.6 The Flow Transmitter shall be intrinsically safe and certified by a statutory body like UL/FM/BASEEFA/CCOE/PESO.

4.1.7 The transmitter shall have integrated digital display (with engineering units) visible from grade. Where the display is not visible from grade, blind transmitter (intrinsically safe) with separate loop powered indicator shall be provided. Same shall be suitable for use in the hazardous area as per Clause 3.6.4.4.5 a) & Clause 3.6.4.4.5 d) of Instrumentation Design Criteria. 8

4.1.8 Flow Transmitters shall have a means for calibration that permits zero and span adjustment.

4.1.9 Flow Transmitters shall be five (5) point bench calibrated using a hydraulic or dead weight tester or precision pneumatic calibrator prior to installation as well as after installation at site. All calibration shall be carried out with certified master calibrators (valid and proved by reputed accredited testing labs) or with calibrators tested and traceable to the standard labs for calibration.

4.1.10 'Universal Hand Held Configurator' shall be supplied for transmitters' calibration/Configuration/diagnostics. The number of Configurators shall be two per process platform & one per well platform.

4.1.11 All vent and drains of the transmitter/tubing/valve manifolds shall be routed to the Drain Header. If the meter is on sour service and harmful fluids like chemicals etc., then it will be routed to close drain header with suitable isolation.

4.1.12 Transmitters shall be immune to Radio frequency interference due to walkie-talkie, paging system, communication system etc. All electronic modules shall be designed for short circuit protection.

4.2 SENSOR TYPE

4.2.1 The pressure element in the measuring unit shall be Diaphragm Type.

4.2.2 The process connection of the transmitter shall be ½" NPTF.

8 **4.2.3** For measurement of slurries, viscous & corrosive fluid, very high pressures (#1500 Class or more), Remote Diaphragm Seals shall be used. Wherever remote diaphragm seals are used, they shall be "Liquid Filled System" type with a 1½" Flanged process connection and flexible armor (steel). The diaphragm seal flange shall also have a flushing filling connection with plug.

4.3 MATERIAL

4.3.1 The material requirements for Flow Transmitters shall be in general according to the Material Selection Chart provided in at Annexure – II of this document.

4.3.2 The element material of the measuring unit shall be suitable for the process conditions.
The Wetted parts of the remote diaphragm seal type FT shall be same as that of the element material. The capillary material of remote diaphragm seal type FT shall be SS 316 and the armour material shall be as a minimum SS 304. Fill-fluid shall be silicone oil or as recommended by Vendor. 8

It shall be transmitter-vendor's responsibility to select, test & supply of total system.

4.3.3 Wetted parts shall be suitable for intended process application. Associated piping, pipe fitting & piping valves etc. shall be according to FS-2004A for Piping Design (2008) & Piping Material Specification.

4.4 ACCURACY

Flow Transmitters shall have an accuracy of ±0.1 % of span or better. For remote seal transmitters, accuracy shall be ±0.2% of span or better.

4.5 OUTPUT SIGNAL

4.5.1 Output signal shall be 2 wired 4-20 mA DC, and capable of delivering the rated current signal into external load of around 600 ohms when powered with nominal 24V DC (negative earthed).

8

4.5.2 Transmitters shall have HART protocol for communication, remote calibration and diagnostics from HART maintenance system.

4.6 REPEATABILITY

Flow Transmitters shall have a repeatability of ±0.1%.

8

4.7 STABILITY

Transmitters shall have a maximum stability of ±0.2% of URL for 5 years.

4.8 ENCLOSURE CLASS

The transmitter shall be weatherproof (IP 65 or better). Aluminium enclosure for FT shall be certified as copper free i.e. less than 0.4% copper by mass and suitably coated for harsh offshore environment.

8

5.0 MANIFOLD SPECIFICATIONS

5.1 Transmitters shall be tested & supplied with a 5-way-5 valve manifold.

5.2 Manifold (5-valve, 5 way manifold) shall be integral type (mono block) unit, supplied by the Transmitter vendor or outsourced by the instrument vendor from a reliable manufacturer.

5.3 Transmitter with the Instrument valve manifold shall be assembled in the transmitter vendor factory, leak tested and hydro tested [1.5 times MAWP (Max. allowable working pressure) with random witnessed to be done by TPI. Selected manifold & valves shall be as per ANSI B16.5 & tested in accordance with standard - MSS-SP-99-2016 or latest.

5.4 MOC shall be as per the wetted parts requirements for the transmitter, with material traceability certificates with heat & lot no., as per standard (EN 102043.1) and same shall be submitted during inspection to CA/TPI (ONGC).

5.5 Manifold details shall be filled in the data sheet for review and approval of the PS.

5.6 Transmitter vendor shall take the responsibility of the whole system.

8

ANNEXURE – I

Multivariable Transmitter (MVT) with Flow Computation

Type	Integral Display
Service	To measure Pressure, Differential Pressure & Temperature of line fluid & to calculate flow as per AGA-3 with AGA-8 for Gas & ISO-5167 for Liquid.
Over-range Protection	130% (static pressure) over-range protection for each port (upstream & downstream)
Units	Engineering : T- DegC, P - Kg/cm2g , bar, DP- mmH2O, inches of H2O, PSI
O/P	Analogue: 4-20 mA, HART/RS485/ Modbus TCP/IP
Electrical Connection	½" NPTF
Process Connection	½" NPTF
Local Indication	4-1/2 Digit LCD in engineering units at grade level
Accuracy	±0.1% of FSD or better; Repeatability: ± 0.25% or better
RTD	External, 3-wire platinum-100. MVT vendor shall be responsible for the supply and testing the RTD along with the MVT before supply
Supply	24V DC Typical
Data Storage	Required 7 days as a minimum for process parameters for Unmanned Platform
Enclosure Class	Weather-proof (IP 65), Explosion-proof to NEMA 7 and certified by third party statutory bodies like UL/FM/BASEEFA/ATEX or equivalent for use in hazardous area as per Clause 3.6.4.4.5 a) & Clause 3.6.4.4.5 d) of Instrumentation Design Criteria.
Others	1. Flow computation shall be achieved within the MVT or through a separate Flow Computer. Where separate flow computer is required, same shall be as per Flow Computer Functional Specifications (FS-3211). 2. Refer FS-3202 for FT for Installation, Hook-up, mounting accessories & general requirement. 3. The Calibration/configuration software, as loaded in the MVT, shall be supplied in CD/DVD. Laptop loaded calibration software shall be supplied with MVT. 4. Selection of Meter shall conform to P&IDs & Process Design criteria. 5. MVT Vendor shall be responsible for the supply and testing the RTD along with the MVT before despatch. 6. Refer RTD Specifications in FS for TT (FS-3302). 7. MVT Vendor shall be responsible for the supply of Thermowell (from TG/TT vendor list) along with the wake frequency calculation. Data sheet and wake frequency calculation sheet shall be signed and stamped by the Thermo-well and MVT Vendor. 8. Where the MVT is in a flow control loop, the Compensated flow signal from 'MVT with flow computer' to 'Process PLC/RTU/DCS' shall be hardwired 4-20 mA for the flow control purpose. Other parameters (pressure, temperature, DP etc.) may be through MODBUS/ HART as applicable. 9. PT (Pressure Transmitters) vendor-list in Suggested Vendor List shall be followed for MVT vendor-selection. Where separate Flow Computer is provided, the Flow Computer vendor list shall be followed.

ANNEXURE – II

8

Flow Transmitter/MVT – Material Selection Chart

S. No.	Service Description	Refer to PMS for Piping Class	Transmitter	
			Sensor	Wetted Part & Valve Manifold
1	Vent Gas, Blow Down, Process Hydrocarbon Drain, Nitrogen, Chemical, Process Drain Water, Diesel Fuel, Hydrocarbon Liquid and vapor. (Except water injection service)	A1, B1, D1, E1, PE1	SS 316L or better	SS 316
	Glycol	A2, B2, D2, E2		
	Acidization	XG1		
	Instrument air	A3, B3, D3,		
	Overboard lines	A8		
2	Water Injection Service	Refer PMS	MONEL	MONEL/ Super Duplex Steel
3	Potable water, Lube Oil & Service Oil, Chemical	A4, A9, B9, D9, E9	HASTALLOY C	SS 316
4	Gas Turbine & Engine Exhaust	A6	HASTALLOY C	SS 316L
5	Raw Sea Water & Fire Water	A5	MONEL	MONEL
6	Chemicals	A22, B22, D22, E22	TITANIUM	HASTALLOY C
7	Corrosive Hydrocarbon service, Sour liquids and vapour	**A1N, B1N, D1N, E1N, F1N, G1N, , PB1N, PD1N, XG1N	SS 316L	SS 316L
8	Corrosive Hydrocarbon service, Sour liquids and vapour	A10, B10, D10, E10, F10	HASTALLOY C	SS 316 L
9	Corrosive Hydrocarbon service, Sour liquids and vapour	A23, B23, D23, E23, F23, G23	TITANIUM	HASTALLOY C

8

Note 1: **All process wetted parts shall be as per NACE MR-01-75 (Latest Edition) as minimum.
Note 2: Where the offered MOC is different than the one indicated above, Vendor shall provide the justification of it being better material and suitability to the Process fluid & Process Conditions.
Note 3: For any Service description not covered above, Vendor to follow material specified in PMS and/or P&ID.
Note 4: The MOC shall be as indicated above or better suiting the Process Conditions.

ANNEXURE – III (Typical Hook-Up Drawings)

(For Gas)

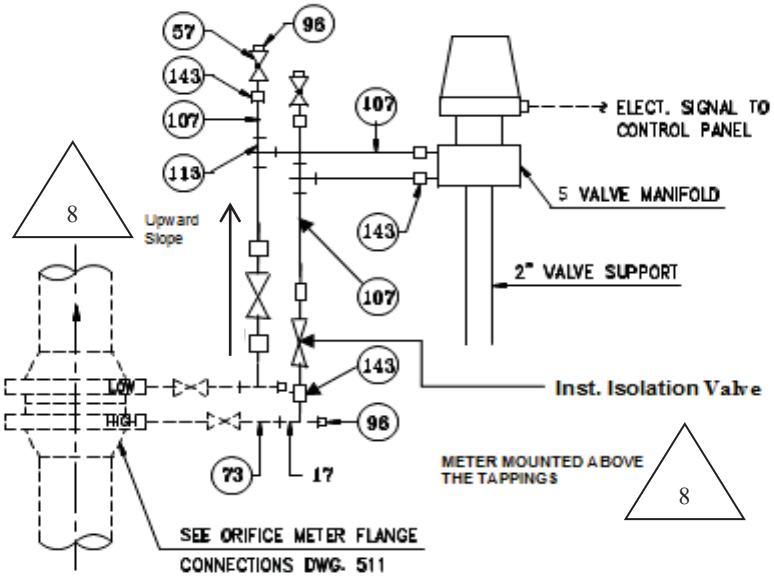

(For Liquid)

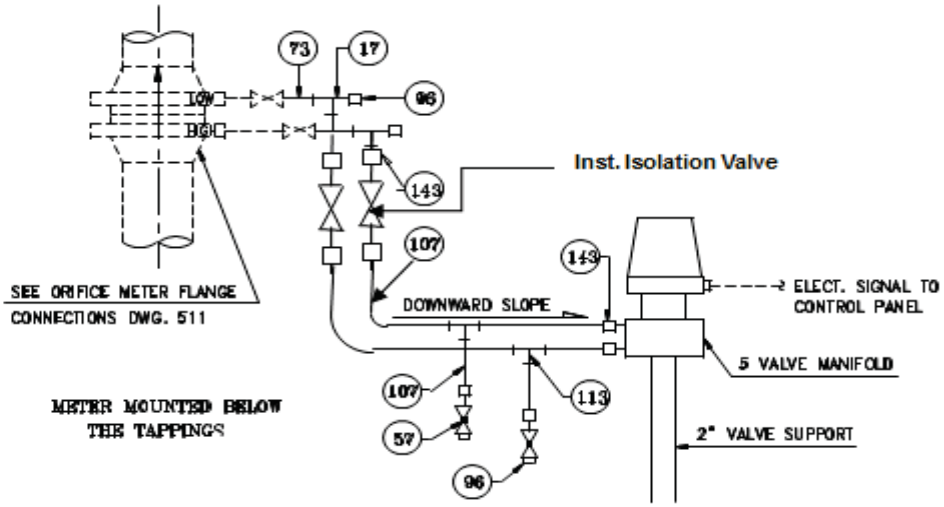

BILL OF MATERIAL

ITEM	QTY.	SIZE	DESCRIPTION	MATERIAL
17	2	1/2"	PIPE TEE, THKxTHKxTHK, NPTF	
57	2	1/2"	GLOBE VALVE, SCRD NPTF	
73	2	1/2"	PIPE NIPPLE, SMLS, 3"LONG, PL.xTHK.(OR)THK..xTHK., NPTM	
96	2	1/2"	PIPE PLUG, SCRD NPTM	
107	A/R	1/2"OD.x0.065"THK.	TUBING	
113	2	1/2"ODx1/2"ODx1/2"OD	TUBING TEE	
138	2	1/2"THKx1/2"OD.	MAIN ELBOW TUBING CONNECTOR, NPTM	
143	6	1/2"THKx1/2"OD.	MALE TUBING CONNECTOR, NPTM	
200	–	–	VALVE	BY PIPING
201	–	–	PIPE NIPPLE	BY PIPING

8

Annexure-IV

Typical Datasheet for Differential Pressure (DP) Type Flow Transmitter/MVT

DIFFERENTIAL PRESSURE (DP) TYPE FLOW TRANSMITTER					
Units | Flow: Liquid – m^3/hr, Gas – sm^3/hr, Steam – kg/hr | Pressure : kg/cm^2g | Temp. : degC | Level/Length : mm | Density : m^3/hr | Viscosity : cP |					
General	1	Tag no.			
	2	P&ID No.			
	3	Equip/Line Number			
	4	Service			
	5	Hazardous Area Classification			
	6	NACE Compliance- NACE MR-01-75 (Latest Edition)			
Process Conditions	7	Fluid state			
	8	Corrosive Compounds			
	9	Operating Pressure (Min/Normal/Max)			
	10	Operating Temperature (Min/Normal/Max)			
	11	Flow Rate (Min/Normal/Max)			
	12	Design Pressure			
	13	Design Temperature			
	14	Density			
	15	Viscosity			
Transmitter	16	Function			
	17	Local Indicator			
	18	Indicator Scale			
	19	Over-Range Protection			
	20	Accuracy			
	21	Repeatability			
	22	Stability			
	23	Power Supply			
	24	Output Signal			
	25	User Configurable Discrete Outputs, if any			
	26	SMART Communication (Y/N)			
	27	SIL Certification			
	28	IP Rating			
	29	Enclosure Protection/ Hazardous Area Classification Certification			
	30	Enclosure Material			
	31	Zero & Span Adjustment			
	32	Cable Entry			
	33	Plug for Spare Entry			
	34	Instrument Range (Min/Max)			
	35	Calibrated Range (Min/Max)			
	36	Manufacturer	Model No.		
Sensor	37	Sensor Type			
	38	Element Material			
	39	Body Static Pressure Rating			
	40	Process Connection Size			
	41	Sensor Fill Fluid			
Remote Diaphragm Seal (if applicable)	42	Diaphragm Seal Material			
	43	Capillary Length			
	44	Capillary Material			
	45	Capillary Fill Fluid			
	46	Flange Size / Rating			
	47	Flange Material			
	48	Flushing Ring Material			
	49	Flushing Ring Connection			
	50	Drain/Vent Valve For Flushing Ring			
	51	Armour Material			
	52	Remote Seal Make	Remote Seal Model		
Accessories	53	Mounting Type			
	54	Mounting Bracket Material			
Valve Manifold	55	Type			
	56	Material			
	57	Connection Size (Impulse side)	Vent/Drain Size		

Notes:

Vendor's Sign & Stamp

Functional Specification
For
Restriction Orifice Plate/Assembly

5

Prepared / Revised By	Reviewed By	Approved By	Total No. of Pages	Date	Rev. No.
Vivek Kumar 30.03.2021	Wandé 30.3.21	S. Ramkanta			
VK	C.N.N	S.R	5	30.03.2021	5
VS	ARD	AKR	5	27.08.2012	4
VS	SRS	GRP	5	18.02.2008	3
ET	RS	GRP	7	28.03.2007	2
AK	MC	RK	7	22.07.2005	1
ET	MC	AC	7	13.05.2003	0

Contents

5

Clause No.	Item		Page No.
1.0	Scope of this Document		3
2.0	Standards And Specifications		3
	2.1	Reference Specifications	3
3.0	Scope of supply		3
4.0	Restriction Orifice Plate/Assembly		3
	4.1	General	3
	4.2	Material	4
	4.3	Range	4
	4.4	Flanges	4
	4.5	Meter Runs	4
	4.6	Orifice Plate Sizing	4
Annexure I	Typical Data Sheet-Restriction Orifice Plates		5

1.0 SCOPE OF THIS DOCUMENT:

1.1 This functional specification describes the essential design considerations for the selection of Orifice Plates for the intended service.

2.0 STANDARDS & SPECIFICATIONS:

2.1 Reference Specifications:

a) Instrumentation Design Criteria

b) Basic Bid Work

c) Project P & IDs

d) Process Design Criteria / Instrument Process Data Sheets / Instrument List with Process Parameters

e) MR / OD / INST / FS / 3203: Functional Specification for Orifice Flow Meter.

3.0 SCOPE OF SUPPLY:

5

3.1 The quantity to be supplied and installed shall be as per the requirements indicated in the Basic Bid Work and P & IDs.

3.2 The vendor shall be responsible for the selection of the Orifice Plates suitable for its intended application, its procurement, tagging, packing, testing & calibration, preparation for shipment, along with accessories, spares, and assistance where required for its installation & commissioning at site. This FS shall be read in conjunction with the Instrument Design Criteria.

3.3 The Restriction Orifice Assembly shall include Orifice Plates complete with studs, bolts, nuts, jackscrews, gaskets, plate holders and plugs and all other accessories necessary to make the system complete.

4.0 RESTRICTION ORIFICE PLATE/ASSEMBLLY:

4.1 General:

5

4.1.1 Details of the Orifice Plates to be used in the Restriction Orifice Assembly shall in general be as per Document No. MR / OD / INST / FS / 3203. (Functional Specification for Orifice Flow Meter).

5

4.1.2 The orifice plates shall be welded with the spacer having design distance and end flanges together to make Multistage RO assembly. Stacking arrangement shall be provided by the vendor as per process design.

5

4.1.3 For the Multistage RO assembly to achieve desired pressure drop/noise level etc. proposed stacking arrangement, having stage wise calculations shall be provided.

5

4.1.4 The installation of Restriction Orifice Plate / Multistage Restriction Orifice Assembly shall in general be according to clause 3.6.4.6 of Instrumentation Design Criteria and as per FS 3203(Functional Specification for Orifice Flow Meter.)

5

4.1.5 Sizing calculations for restriction orifice assemblies shall be furnished along with the purchase specification. These calculations shall include number of plates, bore diameter, thickness of each plate, stress calculation, etc.

5 4.1.6 Restriction Orifice plates shall be installed after hydro testing and line flushing is completed with proper gasket and fastening.

5 4.1.7. Prior to installing the restriction orifice plate, it shall be checked for Tag no., bore size, pipe dia., flange classes, plate thickness, MOC and direction of mounting etc. suitably engraved on restriction orifice handle in upstream flow direction against the Instrument Specification sheet.

5 4.1.8 Restriction Orifice plate shall be checked for correct alignment, and correct orientation with respect to the process flow.

5 4.1.9 The Restriction Orifice plate shall in general comprise of a concentric square edged orifice plate as per process requirements. (Eccentric, segmental or quadrant edged orifices may be used for special services such as slurry, wet gas or highly viscous service).

5 4.1.10 Vendor shall ensure proper design and submit the details for review. The Restriction Orifices shall be arranged in eccentric manner and placed diametrically opposite to each other during fabrication of Multistage Restriction orifice assembly to achieve nonlinear multi-drop path of flow for pressure/noise reduction.

4.2 Material:

5 4.2.1 The material requirements for Restriction Orifice Plate / Multistage Restriction Orifice Assembly shall in general be according to clause 3.6.4.5 of Instrumentation Design Criteria and follow design parameters, wherever applicable, as per Annexure 1 of FS-3203. (Functional Specification for Orifice Flow Meter)

4.3 Range:

5 4.3.1 Range selection for Restriction Orifice Plate / Multistage Restriction Orifice Assembly shall in general be according to clause 4.4 of Document No. MR / OD / INST / FS / 3203 (Functional Specification for Orifice Flow Meter)

4.4 Flanges:

5 4.4.1 Flange requirements for Restriction Orifice Plate / Multistage Restriction Orifice Assembly shall be designed as per standard ASME B16.5, Piping Material Specification and Piping Design Criteria.

4.5 Meter Runs:

5 4.5.1 The minimum upstream and downstream straight lengths shall be provided as per installation requirement.

4.6 Orifice Plate Sizing:

5 4.6.1 Sizing for Restriction Orifice Plate /Multistage Restriction assembly, shall be based on RW MILLER calculations and ISO 5167. Orifice plates sizing calculations and General Arrangement Drawings (GAD) shall be submitted to company for review and approval. Restriction orifice plate type shall be as per piping service condition.

	OFFSHORE ENGINEERNING SERVICES	FUNCTIONAL SPECIFICATION FOR RESTRICTION ORIFICE PLATE/ASSEMBLY 5	Spec. No.	3204
			Rev. No.	5
			Discipline	INSTT
			Page: 5 OF 5	

ANNEXURE – I - TYPICAL DATA SHEET FOR RESTRICTION ORIFICE PLATE/ ASSEMBLY

UNITS: Flow Liquid – M^3/HR. Gas – NM^3/HR. Pressure – Kg/cm^2 Temperature – ^oC Level/Length - M

GENERAL	1.	Tag Number				
	2	Line Number	P&ID No.			
	3	Line Size & Schedule				
	4	Service				
	5	Design Standard/ Sizing Criteria				
	6	Plate Only	Assembly			
PLATE	7	Required Pressure Drop				
	8	Type				
	9	Single Stage Pressure Reduction				
	10	Multiple Stage Pressure Reduction				
	11	Material				
	12	Thickness "W" In Mm				
	13	Beta Ratio d/D				
	14	Bore Dia. 'd'				
	15	Centre Distance 'R'				
	16	Type				
	17	Material				
	18	Size & Rating				
	19	Facing & Finish				
	20	Line ID / OD				
	21	Gasket Thickness Mm				
	22	Gasket Material				
	23	Plate Holder				
	24	Plate Holder Material				
	25	Stud Bolt Material				
	26	Nut Material				
	27	Welded Construction				
OPTIONS	28	Spool Piece Length	Upstream & Downstream Length			
	29	Connection				
	30	Material				
SERVICE CONDITIONS	31	Fluid	State			
	32	Flow Min.	Maximum			
	33	Flow Normal				
	34	Inlet Pressure Operating	Maximum			
	35	Temperature Operating	Maximum			
	36	Sp. Gr. At Operating Temp.	15 ^oC			
	37	Molecular Weight	Cp/Cv			
	38	Operating Viscosity (Cp)				
	39	Compressibility Factor				
	40	Pipe Reynolds Number				
ITEM DETAILS	42	Manufacturer				
	43	Model Number				

5

Vendor's Sign and Seal

FUNCTIONAL SPECIFICATION

FOR

05 ORIFICE METERS

(Orifice Flange Union, Dual Chamber Orifice Plate Assembly & Single Chamber Orifice Plate Assembly)

Prepared/ Revised By	Reviewed By	Approved By	Total No. of Pages	Date	Rev. No.
22/8/23	22/8/23	22/08/23	14	22.08.2023	5
AN	YD	SA	14	22.08.2023	5
MD	ARD	KM	8	29.04.2016	4
TKK	ARD	AKR	5	27.08.2009	3
VS	SRS	GRP	5	18.02.2008	2
ET	RS	GRP	7	28.03.2007	1
ET	MC	AC	7	25.08.2003	0

Table of Contents

1.0 SCOPE OF THIS DOCUMENT 3
2.0 CODES & STANDARDS/ REFERENCE DOCUMENTS & SPECIFICATIONS 3
3.0 SCOPE OF SUPPLY 4
4.0 ORIFICE FLOW METER 4
4.1 Orifice Flange Union 4
4.2 Dual Chamber Orifice Plate Assembly 5
4.3 Single Chamber Orifice Plate Assembly 6
5.0 RANGE 7
6.0 ORIFICE METER COMPONENTS 8
6.1 Orifice Plates 8
6.2 Meter Runs 8
6.3 Flow Conditioners 9
6.4 Measurement 9
7.0 INSTALLATION REQUIREMENTS 10
8.0 MATERIAL 10

ANNEXURE – I 11
MATERIAL SELECTION CHART FOR ORIFICE PLATE ASSEMBLIES 11
ANNEXURE – II 12
FLANGE ASSEMBLY -TYPICAL HOOK-UP DRAWING FOR GAS APPLICATION 12
ANNEXURE – III 13
TYPICAL DATA SHEET FOR ORIFICE METER 13

1.0 SCOPE OF THIS DOCUMENT

This functional specification describes the essential design considerations for the selection of different types of Orifice Meters as differential pressure flow element for Gas or Liquid flow measurement or flow control loops for the intended service.

Orifice Plate Assemblies can be of three types: ***Orifice Flange Union (OFU)/ Flange Assembly, Dual Chamber Orifice Plate Assembly and Single Chamber Orifice Plate Assembly.***

05 Differential Pressure type Flow Transmitter (DP type FT) or Multi Variable Transmitter (MVT) can be used to process differential pressure signal generated by these Orifice Assemblies to convert it into flow measurement units. For details of DP type FT and MVT refer Functional Specification of Differential Pressure Type Flow Transmitter (FS-3202).

Meter Runs/ Straight Runs and Flow Conditioners can be used for maintaining flow profile and accurate flow measurements.

The complete assembly for flow measurement comprising of orifice plate, fittings, meter runs, flow conditioner and DP type FT/ MVT is commonly known as ***Orifice Meters***.

2.0 CODES & STANDARDS/ REFERENCE DOCUMENTS & SPECIFICATIONS 05

2.1 Applicable Codes & Standards: Latest editions of applicable Codes & Standards as enlisted in Clause 3.6.3, Instrumentation Design Criteria.

In general, design, fabrication & installation of orifice plate assembly shall be in accordance with the latest editions of following standards-

a) For gas service –

05

- AGA Report 3 (Orifice Metering of Natural Gas)
- AGA Report 8 (Compressibility Factors of Natural Gas and Other Related Hydrocarbon Gases)
- API MPMS Chapter 14 - Natural Gas Fluids Measurement – Standard practices for measuring, sampling, and testing natural gas fluids.

b) For gas and liquid service –

- ISO-5167 Parts - 1 & 2

c) Flange selection - ASME 16.36 (Orifice Flanges)

2.2 Reference Documents and Specifications:

a) Instrumentation Design Criteria

b) Basic Bid Work

c) Project P&IDs

d) Process Design Criteria/ Instrument Process Data Sheets

3.0 SCOPE OF SUPPLY

3.1 The quantity and type of Orifice meter to be supplied and installed shall be as per the requirements indicated in the Basic Bid Work, Design Criteria and P&IDs.

3.2 The Vendor shall be responsible for the selection of Orifice Meter for its intended application, Procurement, Tagging, Packing, Testing & Calibration, preparation of Shipment along with Accessories, Spares and assistance for Installation & Commissioning at site.

05 3.3 The ***Orifice Flange Union (OFU)*** or ***Flange Assembly*** shall include Orifice Plate(s), Meter Runs, Flow Conditioner, Flanges, Studs, Bolts, Nuts, Jack Screws, Gaskets, Plate Holder, Carrier Ring etc. and other accessories to make the system complete.

05 3.4 The ***Dual Chamber Orifice Plate Assembly,*** or typically known as *Online Retractable Orifice Plate* Assembly shall include Orifice Plate(s), Meter Runs, Flow Conditioner, Fittings (e.g. Plate Carrier, Sliding Valve, Equalizer, Stuffing Box, Sealing Unit, Studs, Bolts, Nuts, Hand Wrench, Plugs etc.) and all the accessories to make the system complete.

05 3.5 The ***Single Chamber Orifice Plate Assembly*** shall include Orifice Plate(s), Meter Runs, Flow Conditioners, Fittings (e.g. Plate Carrier, Sealing Unit, Studs, Bolts, Nuts, Hand Wrench, Plugs etc.) and all the accessories to make the system complete.

3.6 The quantity of Orifice plates to be supplied along with the *Orifice Plate Assembly* shall be as per the Process Datasheet (PDS) to cover the complete range so that each plate is sized for the range of 3:1 or less.

In case of flow rangeability higher than 3:1, two or more orifice plates shall be provided to cover the entire flow range and each plate shall be sized for a range of 3:1 or less. Adequate overlap shall be provided between two consecutive flow ranges.

05 3.7 Vendor shall submit One Year Spares List with rates including Seal, Gasket, O-ring etc. with Part Nos. and description.

4.0 ORIFICE FLOW METER 05

4.1 Orifice Flange Union

05 4.1.1 ***Orifice Flange Union (OFU)*** or ***Flange Assembly*** are flange assemblies in pairs in which pressure taps are machined directly into the flanges.

4.1.2 OFU shall be used for non-custody transfer applications. It can be used for internal measurements, flow control loops and in applications where line shutdown can be taken for orifice plate inspection or replacement.

A bypass arrangement shall be provided for maintenance.

05 4.1.3 The number of orifice plates shall be as per the PDS to cover the complete range so that each plate is sized for the range of 3:1 or less.

In case of flow rangeability higher than 3:1, two or more orifice plates shall be provided to cover the entire flow range and each plate shall be sized for a range of 3:1 or less. Adequate overlap shall be provided between two consecutive flow ranges.

4.1.4 Orifice Flanges shall be fabricated in accordance with the standard ANSI B 16.36 with a minimum flange rating of 300# ANSI and a minimum of 1½ inch pipe size.

4.1.5 Unless otherwise specified, Orifice Flanges shall be RF type for pressure applications lower than ANSI # 600 rating. For pressure applications higher than or equal to ANSI # 600 rating, RTJ type flanges shall be provided. Final material and selection of flanges shall be in accordance with the standard ANSI B 16.36.

05 4.1.6 Two pairs of diametrically opposite flange taps shall be provided. Taps for gas service shall be located on the top. Taps for liquid service shall be located on the bottom of the pipe. Tap size shall be ½" NPTF. The spare tapings shall be plugged with SS316 as a minimum.

05 4.1.7 All the pressure taps shall be provided with full bore isolation valves.

4.1.8 Orifice plate shall be installed in correct alignment and orientation with respect to the process flow.

05 4.1.9 The following information, as a minimum, shall be stamped on the handle of orifice plates:

- Tag No.
- Inlet/ Upstream
- Orifice bore (d)
- Inside diameter of pipe (D)
- Rating
- Material of Construction (MOC)

4.2 Dual Chamber Orifice Plate Assembly 05

05 4.2.1 ***Dual Chamber Orifice Plate Assembly*** shall be used to assure secure and concentric holding of orifice plate achieving accurate flow measurement. These fittings shall allow quick and easy removal or insertion of the orifice plate at the time of replacement or inspection without physical removal of the meter from the line.

4.2.2 Online retractable type Dual Chamber Orifice Plate Assembly is intended to be used for better accuracy and higher rangeability. It shall be used in applications where orifice plate needs to be retracted online for periodic checking or changing of orifice plates without affecting the measurement accuracy, concentricity and without disturbing the normal process operation.

Bypass arrangement is not required with this assembly.

4.2.3 Dual Chamber Orifice Plate Assembly shall be used when flow rangeability is higher than 3:1.

4.2.4 The number of orifice plates shall be as per the PDS to cover the complete range so that each plate is sized for the range of 3:1 or less.

05 The orifice plates shall be provided to cover the entire flow range and each plate shall be sized for a range of 3:1 or less. Adequate overlap shall be provided between two consecutive flow ranges.

4.2.5 Dual Chamber Orifice Plate Assembly shall, in general, be weld-neck at inlet and flanged at outlet.

4.2.6 Chamber venting shall be available through vent valve. Integrated Double Block & Bleed (DBB) assembly may be provided, if specified in scope of work.

4.2.7 Orifice Flanges shall be fabricated in accordance with the standard ANSI B 16.36 with a minimum flange rating of 300# ANSI and a minimum of 1½ inch pipe size.

4.2.8 Unless otherwise specified, Orifice Flanges shall be RF type for pressure applications lower than ANSI # 600 rating. For pressure applications higher than or equal to ANSI # 600 rating, RTJ type flanges shall be provided. Final material and selection of flanges shall be in accordance with the standard ANSI B 16.36.

05 4.2.9 The following information, as a minimum, shall be stamped on the edge of downstream face of orifice plates:

- Tag No.
- Outlet/ Downstream
- Orifice bore (d)
- Inside diameter of pipe (D)
- Rating
- MOC

4.3 Single Chamber Orifice Plate Assembly 05

4.3.1 ***Single Chamber Orifice Plate Assembly*** shall be used to assure secure and concentric holding of orifice plate achieving accurate flow measurement. These fittings shall allow quick and easy removal or insertion of the orifice plate at the time of replacement or inspection without physical removal of the meter from the line.

05 4.3.2 Single Chamber Orifice Plate Assembly can be used for better accuracy and in applications where orifice plate inspection or replacement is acceptable by taking nominal shutdown of flow line.

A bypass arrangement shall be provided for maintenance.

4.3.3 The number of orifice plates shall be as per the PDS to cover the complete range so that each plate is sized for the range of 3:1 or less.

In case of flow rangeability higher than 3:1, two or more orifice plates shall be provided to cover the entire flow range and each plate shall be sized for a range of 3:1 or less. Adequate overlap shall be provided between two consecutive flow ranges.

4.3.4 Single piece body Single Chamber Orifice Plate Assembly shall, in general, be weld-neck at inlet and flanged at outlet.

4.3.5 Orifice Flanges shall be fabricated in accordance with the standard ANSI B 16.36 with a minimum flange rating of 300# ANSI and a minimum of 1½ inch pipe size.

05 4.3.6 Unless otherwise specified, Orifice Flanges shall be RF type for pressure applications lower than ANSI # 600 rating. For pressure applications higher than or equal to ANSI # 600 rating, RTJ type flanges shall be provided. Final material and selection of flanges shall be in accordance with the standard ANSI B 16.36.

4.3.7 The following information, as a minimum, shall be stamped on the edge of downstream face of orifice plates:

- Tag No.
- Outlet/ Downstream
- Orifice bore (d)
- Inside diameter of pipe (D)
- Rating
- MOC

5.0 RANGE 05

5.1 Orifice plate sizing shall be based upon applicable standards as per Clause 2.1 above.

5.2 Differential ranges for orifice flow meters shall not exceed 5000 mm (200 inches) of water. Typical meter ranges for gas, steam, or vapour, streams shall be as follows:

STATIC PRESSURE (Kg/ cm^2 g) (PSIG)	DIFFERENTIAL PRESSURE (mm of Water Column) (inches)
0.35 to 2.5 (5 - 35)	500 - 1250 (20 - 50)
2.5 to 6 (35 - 85)	1250 - 2500 (50 - 100)
Above 6 (Above 85)	As per AGA-3 guidelines.

5.3 The range 2500 mmWC (100 inches WC) is desirable wherever possible in line with AGA-3 guidelines (for Gas) in case of static pressure of 6 kg/cm^2g and above.

5.4 Meter ranges shall preferably be chosen such that the normal flow is between 60% and 80% of the meter range.

05 5.5 For liquids, Orifice plate ß (beta) ratio (orifice diameter/ inside pipe diameter or d/ D) in general shall be kept between 0.2 and 0.75.

6.0 ORIFICE METER COMPONENTS 05

6.1 Orifice Plates

05 6.1.1 The Orifice Plate shall have, in general, a **concentric** sharp bore square edged at inlet side and beveled at outlet side designed and fabricated in accordance with latest editions of AGA-3/ AGA-8/ ISO 5167-Part 1 & 2/ API MPMS 14.3 etc.

Eccentric, *segmental* or *quadrant* edged orifices may be used for special services such as slurry, wet gas or highly viscous service, if specified.

6.1.2 Orifice plate ß (beta) ratio in general shall be kept between 0.2 and 0.75 for all types of Orifice Plates Assemblies considering actual fluid of measurement.

05 6.1.3 Beta ratio calculations specifying the d, D, plate thickness, slope level, sharpness and other details shall be submitted for review/ approval.

6.1.4 Orifice Plates to be used with Single or Dual Chamber Assembly shall be designed for use with the removable seal.

6.1.5 The Orifice Plate Assembly shall be capable of withstanding differential pressure equal to full line pressure without zero or calibration change.

05 6.1.6 The maximum allowable pressure drop across the orifice meter shall be as per process data sheet.

6.1.7 Drain holes shall be provided in steam and gas flow service where condensation possibility exists. Vent holes shall be provided in liquid service if gas entrainment possibility exists.

6.2 Meter Runs

6.2.1 The straight lengths of upstream & downstream piping of orifice assembly shall be in accordance with AGA-3, API MPMS 14.3 and ISO-5167 standards.

05 6.2.2 Meter Runs or Meter Tubes shall be provided to ensure upstream and downstream straight length requirements and precise alignment as per AGA-3, API MPMS 14.3 and ISO-5167 standards.

6.2.3 Meter Runs shall not be for less than 1½” nominal pipe size. Where required, the piping diameter shall be expanded to the required size for installing the Meter Run/ Orifice Assembly, in line with the applicable standards.

05 6.2.4 Each upstream and downstream sections of the Meter Run tube shall be made from one continuous length of select straight and round pipe.

6.2.5 If sufficient straight run is not available for the given piping geometry, Meter Runs with Flow Conditioners may be used made as per AGA-3/ ISO 5167.

6.2.6 Internal surface of the finished Meter Tube shall be free from any irregularities and defects. The entire Meter Tube shall be honed after fabrication and assembly including grinding of weld seams. 05

6.2.7 No connections shall be made in either the upstream or downstream meter run other than process tappings.

6.2.8 The static pressure shall be measured at the upstream pressure tap.

6.2.9 Temperature shall be measured at 5D to 20D downstream of the orifice meter.

6.3 Flow Conditioners 05

6.3.1 Flow Conditioners e.g. Flow Straightener or Straightening Vane or Flow Profiler shall be provided as per AGA-3/ ISO-5167/API MPMS 14.3/ ASME MFC-3M when adequate upstream meter run section is not available due to paucity of space. 05

6.3.2 Flow Conditioners shall match the piping class in which it is installed.

6.3.3 Any prototype, duplicate, refurbished or uncertified design shall not be accepted.

6.3.4 The MOC for Flow Conditioners shall be same as orifice plate.

6.4 Measurement 05

6.4.1 Measurement/ totalization/ P-T compensation etc. of flow shall be done as defined in the basic bid work by following methods: 05

- Multi-Variable Transmitter (with or without integral flow computation/ compensation as per AGA-3 & AGA-8).
- Differential Pressure (DP) type Flow Transmitter
- DCS/ Flow Computer
- Flow Totalizer

6.4.2 Process parameters like instantaneous flow, totalized flow, pressure, differential pressure, temperature etc. shall be transmitted from the above to RTU/ PCS/ DCS, as applicable.

6.4.3 In case of DP type pneumatic flow meters, graduation scale of gauges shall be 0-10 square root with multiplication factor to suit flow rate. The meter shall have proper dampening mechanism, if required.

Pneumatic totalizer shall also be provided with a proper multiplication factor in line with the flow calculation requirement.

7.0 INSTALLATION REQUIREMENTS 05

The installation of Orifice Meters shall, in general, be according to clause 3.6.4.6 of Instrumentation Design Criteria and as mentioned below:

7.1 Orifice Meter shall be installed preferably in horizontal line considering ease of accessibility and safe changing of the orifice plate(s).

7.2 The piping layout shall preferably be such that flow conditioner are not required and gas meter runs are self draining.

7.3 Upstream elbows in more than one plane shall be avoided to minimize vortices.

7.4 Piping and equipment shall be arranged so that flashing does not occur at or upstream of orifice plates.

7.5 All socket-weldings shall be 100% Dye penetration / Magnetic particle tested. All other weldings shall be 100% radio graphed.

7.6 Orifice plate shall be checked for correct alignment and orientation with respect to the process flow.

7.7 Orifice Plates shall be checked visually for nameplate data and for an upstream sharp edge. Bore shall be callipered to check for compliance with specifications.

7.8 Orifice Plates shall be installed after line flushing and hydro testing.

7.9 Calibration, Inspection and Testing requirements shall, in general, be as per Clause 3.6.4.7 of Instrumentation Design Criteria.

8.0 MATERIAL

The material requirements for Orifice Meters shall, in general, be according to the Material Selection Chart provided in Annexure-I.

ANNEXURE – I

MATERIAL SELECTION CHART FOR ORIFICE PLATE ASSEMBLIES 05

SNo.	Piping Class	Orifice Assemblies	
		Flange/ Body/ Meter Run	Plate
1.	A1, B1, D1, E1, A2, B2, D2, E2, XG1, PE1, A3, B3, D3, A8	CARBON STEEL	SS316
2.	**A1N, B1N, D1N, E1N, F1N, G1N, XG1N, PB1N, PD1N, PE1N	CARBON STEEL - NACE	SS316L - NACE
3.	A4, A6, A9, B9, D9, E9, A13	SS316	SS316
4.	A5, A13	90-10 Cu-Ni/ MONEL	MONEL
5.	A10, B10, D10, E10, F10	SS316L- NACE	SS316L - NACE
6.	A12	TITANIUM	TITANIUM
7.	**A1LN	CS - NACE	SS 316L - NACE
8.	A22, B22, D22, E22	SS316L	SS316L
9.	A23, B23, D23, E23, F23, G23	DUPLEX SS	INCONEL 625/ DUPLEX SS
10.	A15, B15, D15, E15, XG15, XH15	INCOLOY 825 - NACE	INCOLOY 825 - NACE
11.	A15A, B15A, D15A, E15A	INCOLOY 625 - NACE	INCOLOY 625 - NACE
12.	A3S	90-10 Cu-Ni/ MONEL/ INCOLOY 825 - NACE	MONEL/ INCOLOY 825 - NACE

05

Notes:

1. For the service description of above piping classes, refer Piping Material Specification (PMS).
2. **All process wetted parts shall be as per NACE MR-01-75 (Latest Edition) as minimum.
3. The MOC of all parts shall be as indicated above or better suitable for the process conditions.
4. Where the offered MOC is different than the above, Vendor shall give the justification of it being better material and suitable for the process conditions.
5. For any piping class not covered above, Vendor shall follow material specified in PMS and/ or P&ID.

ANNEXURE – II

05

FLANGE ASSEMBLY -TYPICAL HOOK-UP DRAWING FOR GAS APPLICATION

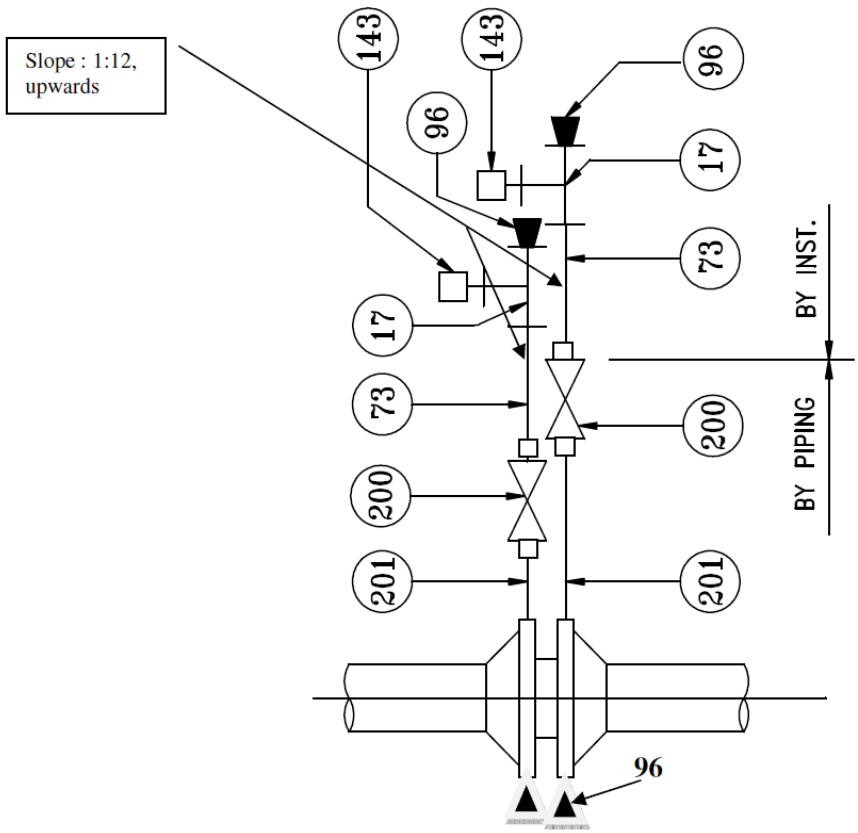

ORIFICE PLATES FLANGE CONNECTIONS

BILL OF MATERIAL				
ITEM	QTY.	SIZE	DESCRIPTION	MATERIAL
17	2	1/2"	PIPE TEE. THxTHxTH NPTF	
143	2	1/2"THx1/2"OD	MALE TUBING CONNECTOR	
96	2	1/2"	PIPING PLUG NPTM SCREWED	
73	2	1/2"	SWAGE NIPPLE PLxTH NPTM	
200	2		VALVE	BY PIPING
201	2		NIPPLE	BY PIPING

ANNEXURE – III

TYPICAL DATA SHEET FOR ORIFICE METER 05

Units : Flow Liquid - m^3/hr Gas - Nm^3/hr Pressure - Kg/cm^2g Temperature - ºC Level/ Length – mm Density: kg/m^3

GENERAL	1	Tag Number				*		
	2	P&ID No.				*		
	3	Line Number				*		
	4	Line Size		Pipe Schedule		*	*	
	5	Inlet Line ID		Outlet Line ID		*	*	
	6	Service				*		
	7	Design Standard				*		
SERVICE CONDITIONS	8	*Flow*	Minimum	Normal	Maximum	*	*	*
	9	*Inlet Pressure*	Minimum	Normal	Maximum	*	*	*
	10	*Temp.*	Minimum	Normal	Maximum	*	*	*
	11	Allowable Pressure Drop				*		
	12	Design Pressure		Design Temp.		*		
	13	Sp. Gravity at Operating Temp.		Sp. Gravity at 15^0 C		*	*	
	14	Molecular Weight		Cp/ Cv		*	*	
	15	Operating Viscosity (cP)				*		
	16	Compressibility Factor				*		
	17	Pipe Reynolds Number				*		
	18	Operating Density		Vapor Pressure		*		
ORIFICE PLATE ASSEMBLY	19	*Type*	Flange Union	Dual Chamber	Single Chamber	*	*	*
	20	*Mounting*	Horizontal	Vertical		♦	♦	
	21	Size		Rating		♦	♦	
	22	Recommended Straight Run	U/S	D/S		♦	♦	♦
	23	End Types	U/S	D/S		♦ Weld Neck/ Flanged	♦ Weld Neck/ Flanged	
	24	Body Material				♦		
	25	Flange Material		Flange Facing & Finish		♦	♦	
	26	Jackscrews (for OFU)				Required		
	27	Tap Location		Size		♦	½” NPT	
	28	Gasket Thickness (mm)				♦		
	29	Gasket Material		Seal Ring Material		♦		
	30	Plate Holder Material (for OFU)				♦		
	31	Carrier Ring		Material		♦	♦	

	32	Plate Carrier Material (for single & dual chamber)			♦		
	33	Stud Bolt Material			♦		
	34	Nut Material			♦		
ORIFICE PLATE	35	Type			♦		
	36	Material			♦		
	37	Thickness “W”			♦		
	38	Bore Diameter ‘d’			♦		
	39	Internal Diameter (D)			♦		
	40	Beta Ratio (ß) d/D			♦		
	41	Differential Range (mmWC)			♦		
	42	Full Scale Flow			♦		
	43	Pressure Drop			♦		
	44	No. of Plates			♦		
	45	Vent / Drain			♦		
FLOW TRANSMITTER	46	Differential Range (mmWC)			♦		
	47	Meter Maximum			♦		
	48	MVT Required	FT Required	FC Required	* Yes/ No	* Yes/ No	* Yes/ No
	49	5W Manifold Required			Yes		
	50	P-T Compensation Required (Yes/ No)			*		
OPTIONS	51	Meter Run Required (Yes/ No)			*		
	52	Meter Run Material			♦		
	53	Flow Conditioner Required (Yes/ No)			♦		
	54	Flow Conditioner Material			♦		
	55	Lubricant Provided (for single & dual chamber)			Yes		
	56	NACE compliance (Yes/ No)			♦		
ITEM DETAILS	57	Make			♦		
	58	Model No.			♦		

NOTES:

1. *** DEC to Fill.** These entries shall be filled by Contractor’s Design Engineering Consultant (DEC) based on detailed engineering.
2. ♦ **Vendor to Fill.** Manufacturer Standard. Vendor shall fill these vendor specific data conforming to specifications.

Vendor’s Sign and Stamp

FUNCTIONAL SPECIFICATION

FOR

TEMPERATURE GAUGE AND THERMOWELL

PREPARED / REVISED BY	REVIEWED BY	APPROVED BY	TOTAL No. OF PAGES	DATE	REV. No.
AV	ARD	ARD	12	26.03.2018	6
ET	ARD	AKR	10	09.11.2012	5
VS	SRS	GRP	8	18.02.2008	4
AK	BK	GRP	9	28.03.2007	3
AK	BK	GRP	9	31.09.2006	2
AK	MC	RK	9	31.09.2006	1
ET	MC	AC	9	25.08.2003	0

CONTENTS

Clause No.	ITEM		Page No.
1.0	Scope of This Document		3
2.0	Codes and Standards		3
	2.1	Reference specifications	3
3.0	Scope of Supply		3
4.0	Temperature Gauge		3
	4.1	General	3
	4.2	Material	4
	4.3	Range	4
	4.4	Accuracy	4
	4.5	Reading Scales	4
	4.6	Thermowell	4
	4.7	Equipment protection	5
	4.8	Miscellaneous	5
	4.9	Thermowell Testing	5
	4.10	Thermocouple	6
Annexure I	Material Selection Chart		7
Annexure II A, II B, II C	Hook-up drawing		8-10
Annexure II D	Hexagonal Head threaded type		11
Annexure III	Typical Data Sheet Temperature Gauge		12

1.0 SCOPE OF THIS DOCUMENT:

1.1 This functional specification describes the essential design considerations for the selection of Temperature Gauge for the intended service.

2.0 CODES & STANDARDS:

2.1 **Reference Standards (Latest editions):**

a) EN 13190
b) ASME B 40.3, B 40.4, B 40.8 & B 40.9

2.2 **Reference Documents and Specifications:**

a) Instrumentation Design Criteria
b) Basic Bid Work
c) Project P & IDs
d) Process Design Criteria / Instrument Process Data Sheets

3.0 SCOPE OF SUPPLY:

3.1 The quantity to be supplied and installed shall be as per the requirements indicated in the Basic Bid Work, Design Criteria and the P & IDs.

3.2 The vendor shall be responsible for the selection of the Temperature gauge suitable for its intended application, its procurement, tagging, packing, testing & calibration, preparation for shipment, along with accessories, spares, and assistance where required for its installation & commissioning at site.

4.0 TEMPERATURE GAUGE:

4.1 **GENERAL:**

4.1.1 The temperature gauges shall be used for local indication. These local temperature indicators shall in general be heavy duty; weatherproof, dial type bi-metal thermometers with 100 mm to 150 mm dial size, external adjustment, every angle rotatable and rigid stems. Liquid filled casing shall be provided for dial thermometers.

4.1.2 Filled system dial thermometers shall be used when the operating temperature is between 0°C (32°F) and – 45°C (- 50°F).

4.1.3 The Bi-metal shall be adjustable union stem type with SS 316 material for the stem. The Union size shall be ½” NPT and the diameter shall suit the well diameters.

4.1.4 Dial Thermometers shall be provided with separable stainless steel thermowells.

4.1.5 Filled capillary instruments shall be compensated for ambient temperature and shall not be used for measurements above 420°C.The armor for the capillary instruments shall be flexible. The length of the capillary shall not be more than 5 m per gauge.

4.2 **MATERIAL:**

4.2.1 The material requirements for temperature gauges and thermowell shall in general be according to clause 3.6.4.5 of Instrumentation Design Criteria and as per Annexure I of this document, with NACE compliance as required.

4.2.2 Case material for all temperature gauges shall be SS 316. Capillary and Armour shall be of stainless steel. Movement shall be minimum SS.

4.2.3 The Window material shall be Shatter proof glass / Acrylic.

4.3 **RANGE:**

The range shall be selected such that the normal operating temperature shall fall in the middle third of the span.

4.4 **ACCURACY:**

Accuracy shall be as per EN 13190 Class 1.

4.5 **READING SCALES:**

Indicating scales shall read out in Degrees Celsius unless otherwise specified.

4.6 **THERMOWELL:**

4.6.1 Thermowell shall be installed for all temperature-sensing elements installed on process lines or vessels.

4.6.2 The Thermowell] shall be machined from drilled bar stock with minimum wall thickness of 4.8mm, and 6mm bore. Bore shall be concentric with the outside diameter to within 10% of wall thickness. In package equipment, for smaller diameter pipe, threaded type thermowell shall be provided with hexagonal head as applicable. △6

4.6.3 MOC for Thermowells and Thermowells flanges shall be as per Annexure - I attached and shall be rated one piping class higher than the pipe to which it is connected. △6

4.6.4 Thermowells shall have ½" NPT female thread for element and 1½" flanged for vessel or piping connection.

4.6.5 Where Thermowells are provided without gauges (i.e., those that are to be used as test wells) shall be provided with a stainless steel 316 screwed plugs and chain.

4.6.6 The Thermowell tip shall be at centerline of pipe but immersion length shall not exceed 400 mm for higher size pipes.

4.6.7 Wells for Insulated Vessels and lines shall have Extension Necks. △6

4.6.8 A Thermowell, when required shall be installed adjacent to flow recorder, temperature recorder and controller measuring elements as per installation requirement. 6

4.6.9 Thermowell Welding shall be dye Penetrated Checked as per BS 5500.Thermowells welding shall be full penetration type with 'U' length as follows: 6

Upto 4"	-	280 mm by blowing pipe to 4"
4" to 6" lines	-	280 mm
Above 6"	-	320 mm
Vessels	-	400 mm

4.6.10 The typical thermo-well drawing is shown at Annexure – II of this specification.

4.7 EQUIPMENT PROTECTION:

The following protection requirements shall be read in conjunction with clause no. 3.6.4.4 of Instrumentation Design Criteria.

4.7.1 Temperature Gauges: 130% of measuring range shall be provided as Over-range protection for the temperature gauge. The temperature gauge shall be weather proof to NEMA 4X / IP 65 or better.

4.7.2 Thermowells: Thermowells shall be designed to withstand vibration stresses caused by stream velocity. Also, the natural frequency of the Thermowells shall be calculated applying all the factors like fluid mass, added sensor mass, non-uniform profile beam and mounting compliance. After all the correction factors are applied, the in-situ or installed natural frequency, f c n is calculated and used for the rest of the frequency analysis. The steady state frequency (wake frequency at maximum velocity), f s shall be less than 40% of the corrected natural frequency of the thermo well or shall satisfy the condition 0.6 f c n < f s (steady state) < 0.8 f c n .The Contractor shall submit wake frequency calculation as per ASME PTC 19.3 TW 2016/ latest for review and the justification for the final selection of the thermo well. 6

4.8 MISCELLANEOUS:

Thermowells shall not be installed in elbows. Lagging extensions shall be provided on insulated piping and insulated vessels. Thermowells shall be oriented so that gauge dials are clearly visible and readable from the deck or the appropriate access platform. Where a thermowell location causes poor access or visibility, the Contractor shall provide a remote-mounted capillary-gauge, located in an accessible and readily visible location.

4.9 THERMOWELL TESTING:

4.9.1 Thermowells shall be pressure tested with hydraulic fluid as per ASTM BS1560. Relevant test certificates shall be submitted along with the supply.

4.9.2 Ultrasonic test for bore concentricity of Thermowells shall be carried out.

4.9.3 Thermowell material test certificates shall be submitted along with the supply.

4.9.4 Temperature gauge calibration shall be as per EN 13190.

4.10 Temperature Gauge Testing Requirements:

4.10.1 The following tests shall be carried out for Temperature Gauges:

A) Test Requirement of Temperature Gauges according to DIN EN 13190:
   a) Accuracy and Hysteresis
   b) Influence of Mounting Position

B) Inspection / Acceptance Test at Factory / Manufacturer Premises for Temperature Gauges:
   a) Visual Inspection
   b) Dimensional Verification
   c) Accuracy
   d) Degree of Protection

4.10.2 Tests indicated in (A) shall be Type Tests for Temperature Gauge. Type Tests for each model/range shall be witnessed by DNV/LLOYDS/BV/TUV/NABL/Govt. Laboratory etc. Valid type test certificates shall be provided along-with the supply. Tests indicated in (B) are for Inspection/Acceptance at Factory/Manufacturer Premises.

4.10.3 Each type test certificate should indicate its validity period (Normally 5 years). The same has to be seen at the time of delivery/supply.

4.10.4 Inspection/Acceptance Test will be 10% of each model/range of the total quantity shall be carried out.

ANNEXURE – I

Material Selection Chart for Thermowell

S. No.	Piping Class	Well	Flange
1	A1, B1, D1, E1, F1, XF1, F1, PA1, PB1, PD1, PE1, PXF1, PF1, A2, B2, D2, E2, XG1, A1H, A3, B3, A8	SS316	SS316
2	Sea Water / Untreated Produced Water	MONEL	MONEL
3	A4, A6, A9, B9, D9, E9	SS316	SS316
4	A5	MONEL	MONEL
5	A7	TITANIUM	TITANIUM
6	** A1N, B1N, D1N, E1N, F1N, XF1N, PA1N, PB1N, PD1N, PF1N, XG1N	SS316L	SS316L
7	A10, B10, D10, E10, F10	SS316L	SS316L
8	A11, B11, D11, E11, F11, PA11, PB11, PD11, PE11, PF11	HAST-C	HAST-C

[** All wetted parts of Thermowell shall conform to NACE MR-01-75 (Latest edition).]

ANNEXURE – II A

(Hook Up Drawing)

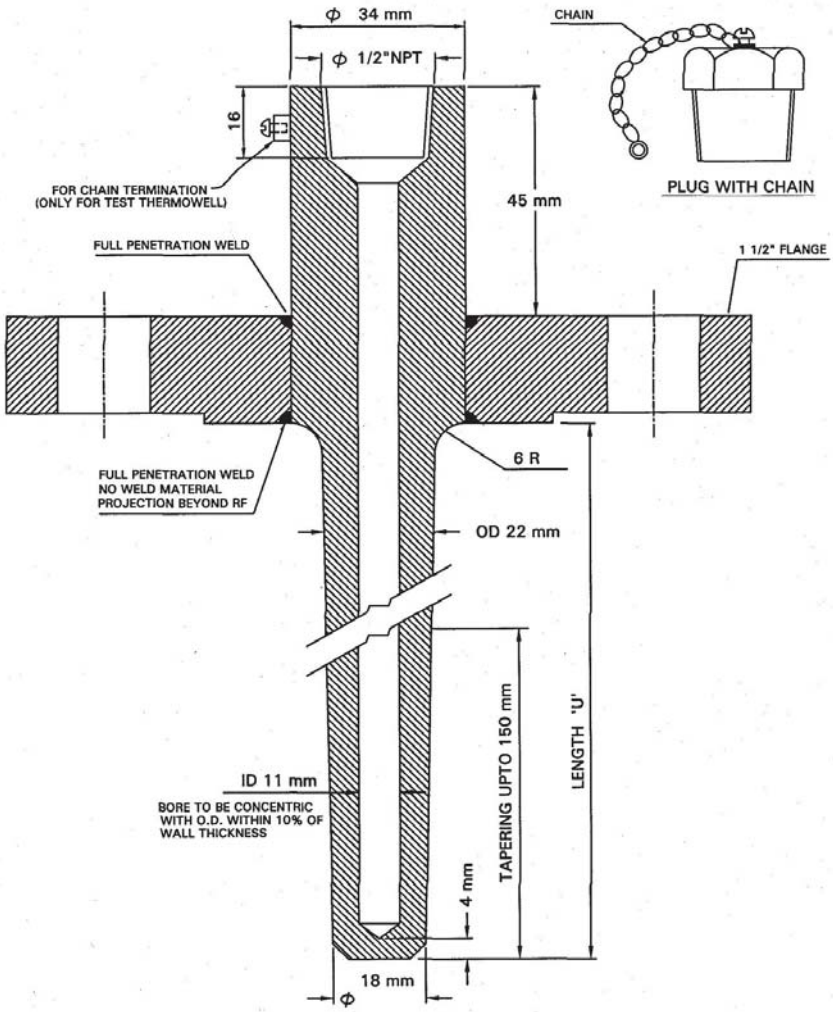

[** All wetted parts of Thermowell shall conform to NACE MR-01-75 (Latest edition).]

Note:

1) This standard is applicable for:
   (a) Temperature gauges and duplex temperature elements
   (b) Thermowell upto 1500# ANSI Rating or equivalent
2) Type shall be RTJ type for ANSI rating >= 600#
3) DP Test shall be carried out for all weld joints.
4) Chain and plug shall be applicable only for test thermowells.

ANNEXURE – II B

(Hook Up Drawing)

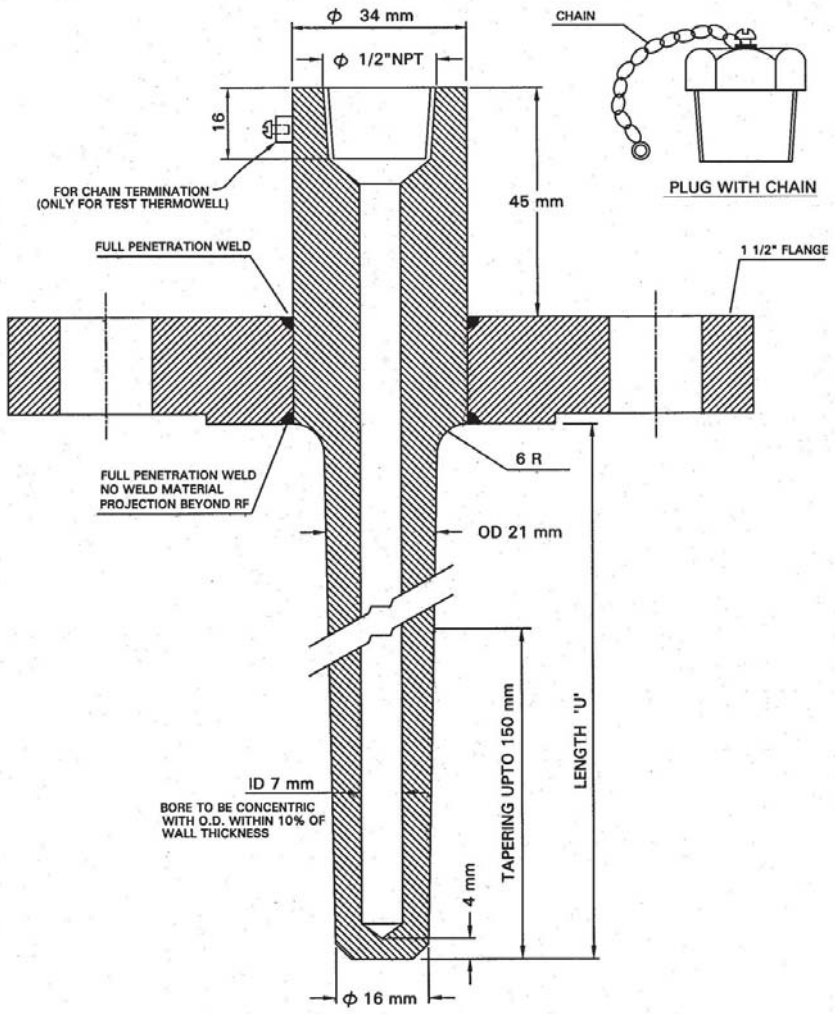

Note:

1) This standard is applicable for:
   (a) Single Temperature element
   (b) Thermowell upto 1500# ANSI Rating or equivalent
2) Type shall be RTJ type for ANSI rating >= 600#
3) DP Test shall be carried out for all weld joints.
4) Chain and plug shall be applicable only for test thermowells.

ANNEXURE – II C

(Hook Up Drawing)

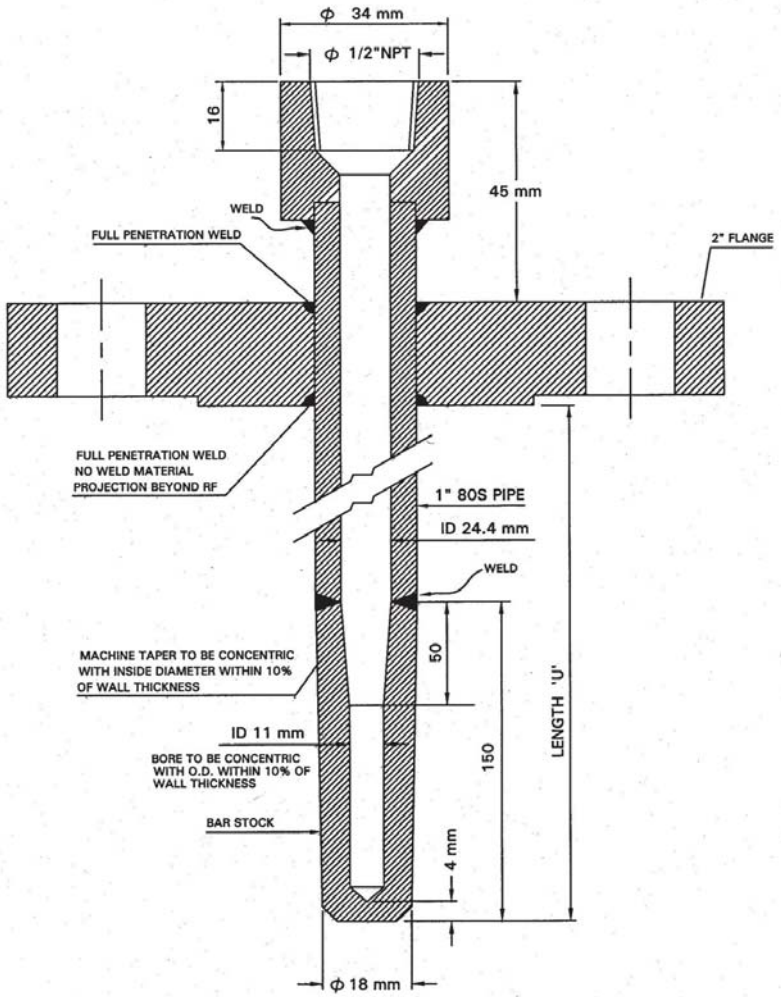

Note:

1) DP Test shall be carried out for all weld joints.
2) Type shall be RTJ type for ANSI rating >= 600#.

ANNEXURE – II D

HEXAGONAL HEAD THREADED TYPE

T Tapered Design

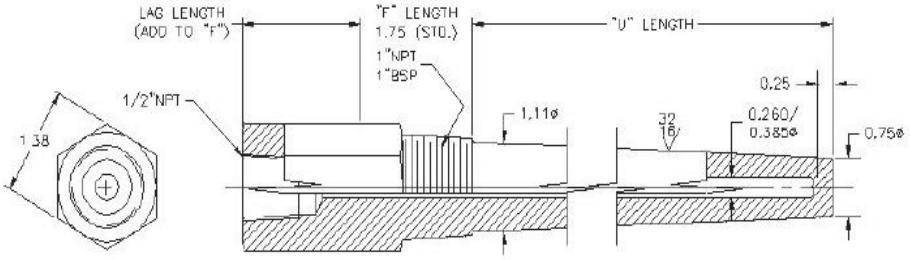

S Straight Design

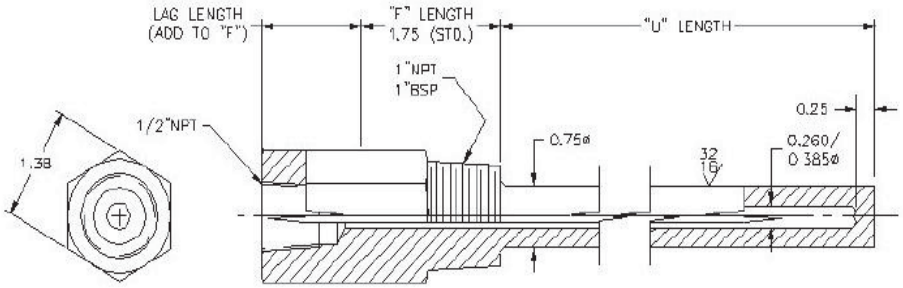

P Stepped Design

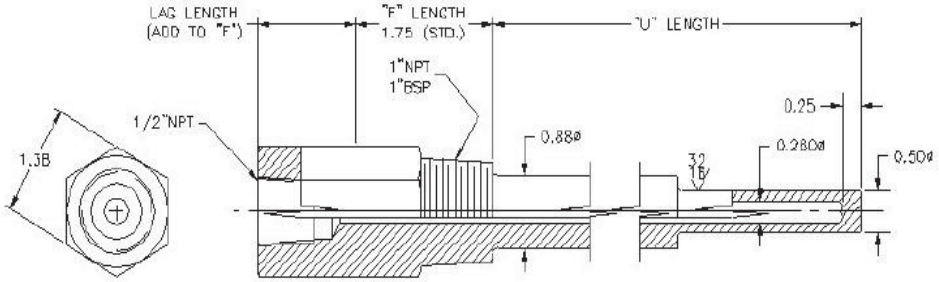

"F" Length= Wrench and Thread Allowance
"U" Length= Immersion length into process

ANNEXURE – III Typical Data Sheet for Temperature Gauge

TEMPERATURE GAUGE

Units : Flow → □Liquid-M^3/Hr, Gas → Kg/Hr, Steam → Kg/Hr, Pressure → Kg/Cm^2 G, Temperature → Deg C, Level/ Length →□mm

1	Type :- Bimetal : Filled : Other :		FILLED SYSTEM		
2	Well :- Required : Not required :		14	SAMA Class :	
3	Mounting :- Local : Surface : Flush :			Compensation : Case :	Full :
4	Dial Size :- 150 mm : Other :		15	Bulb type :	
5	Colour :- White : With Black letters:			Bulb Material :	
6	Case Material :- : Other :		16	Bulb Union Threaded To :	1/2" NPT(M) : Other :
7	Window Material :- Glass : Acrylic : Other :		17	Extension Type :- Rigid : Bendable: Angle :	
8	Conn. Location :- Back : Bottom : Back Adjustable : All Angles Adjustable :		18	Bulb Dia :- Mfr. Std. : To suit well : Other :	
			19	Capillary Material :	
9	Accuracy :			Armour Flexible :	
10	Enclosure :			Armour Material :	
	Enclosure Class :		20	Capillary Length :	
11	Zero adj. : -			Over range Protection :-	

BIMETAL				**THERMOWELL**		
12	Stem :			21	Material :	Other :
	Type :	Adj. Union :	Threaded :	22	Construction :	Driller bar Stock / Built up :
	Material :					Other :
	Other :			23	Process Connection :	11/2" flanged : / 1" NPT(M) :
13	Stem Dia :- Mfr. Std. : Other : To suit well :					Other :
				24	Gauge Connection	1/2" NPT(F) : / Other :
13(b) △	Temperature Gauge	Make		25	Thermowell As Per Drawing. :	
		Model				

Tag No.	Temp Deg C		Range Deg C	Well Dim Mm		Flange		Service	Options
	Nor	Max		U	T	Material	Rating, face/fin.		

NOTES :

1. Immersion lengths of thermo-wells on vessels to be confirmed by respective vessel vendors.

□ VENDOR'S SIGNATURE WITH SEAL

FUNCTIONAL SPECIFICATION

FOR

"TEMPERATURE SWITCH (ELECTRICAL)" 3

*Some of the clauses have been re-arranged within the Sections and clause nos. may not match with the earlier revisions.

PREPARED / REVISED BY	REVIEWED BY	APPROVED BY	TOTAL No. OF PAGES	DATE	REV. No.
Rekhi Saxena	Nandi	S. Ravi Shanker 2/7/21			
RS	CNN	SRS	9	02.07.2021	3
VS	SRS	GRP	8	18.02.2008	2
ET	RS	GRP	10	28.03.2007	1
AK	MC	AC	10	13.05.2003	0

3

CONTENTS

Clause No.	ITEM		Page No.
1.0	Scope of This Document		3
2.0	Codes & Standards/ Reference Documents and Specifications		3
3.0	Scope of Supply		3
4.0	Temperature Switch		3
	4.1	General	3
	4.2	Thermowell	4
	4.3	Material	4
	4.4	Accuracy	4
	4.5	Reading Scale	4
	4.6	Enclosure Class	4
5.0	Installation Requirements		5
6.0	Calibration, Inspection & Testing		5
7.0	Tagging & Nameplates		5
Annexure I	Material Selection Chart for Thermowell		6
Annexure II	Thermowell Drawing For Temperature Switch		7
Annexure III	Hookup Drawing For Temperature Switch		8
Annexure IV	Typical Datasheet for Temperature Switch		9

1.0 SCOPE OF THIS DOCUMENT

This functional specification describes the essential design considerations for the selection of Temperature Switch for the intended service.

2.0 CODES & STANDARDS / REFERENCE DOCUMENTS & SPECIFICATIONS

a) Instrumentation Design Criteria

b) Basic Bid Work

c) Project P&IDs

d) Process Design Criteria/Instrument Process Data Sheets/Instrument List with Process Parameters

3.0 SCOPE OF SUPPLY

3.1 The quantity to be supplied and installed shall be as per the requirements indicated in the Basic Bid Work, P&IDs and approved Instrument Datasheets.

3 3.2 The vendor shall be responsible for the selection of the Temperature Switch suitable for its intended application, its procurement, tagging, packing, testing & calibration, preparation for shipment, along with accessories, spares, and assistance where required for its installation & commissioning at site. This FS shall be read in conjunction with the Instrument Design Criteria.

4.0 TEMPERATURE SWITCH (Electrical Type):

3

4.1 **General:**

4.1.1 The Temperature Switch shall be of Electrical Type.

4.1.2 The switch mechanism shall be a hermetically sealed micro-switch of SPDT, snap action type.

4.1.3 Arcing during making or breaking of switch contacts shall be minimum. The switch contacts shall have long life and minimum wear. The material chosen for switch contact shall have good thermal conductivity for dissipating heat.

4.1.4 There shall be minimum bounce during making and breaking of switch contacts and switch mechanism shall be designed to minimize the vibration.

4.1.5 Wherever exposed to the process fluid, the switch element shall be selected in such a way that it can withstand an over- range pressure of 1.5 times maximum range without loss of calibration.

4.1.6 The switch shall be provided with 2 Nos. ½" NPT (F) cable entries. One cable entry shall be plugged with suitable explosion-proof plug.

4.1.7 The contact rating of head mounted SPDT/DPDT hermetically sealed switch (potential free contact) shall be minimum 1 A for 24V DC power or 0.2A for 110V DC power. The rating shall be chosen for the application and interlock /alarm circuitry of the loop.

4.1.8 Dead band shall be less than the difference between the normal operating pressure and set point. Dead- band shall be fixed type unless otherwise specified.

4.1.9 Temperature switches shall be heavy duty, with user adjustable set point. Adjustments shall be tamper-proof.

4.1.10 Electrical Temperature switches shall be calibrated for their set points.

4.1.11 Vendor shall ensure that set point falls between 35% and 70% of adjustable range of the selected model in general.

3

4.2 **Thermowell**

4.2.1 Temperature elements installed on process lines or vessels shall be installed in thermowells.

4.2.2 The specifications of thermowell shall be as per FS- 3302.

4.2.3 Vendor shall provide Wake Frequency Calculation for thermowell wherever used as per latest revision of ASME PTC 19.3 TW Standard (Thermowell Performance Test Codes).

4.2.4 MOC of thermowell shall be as per the Annexure-I attached.

4.2.5 Thermowells shall not be installed in elbows.

4.3 **Material:**

4.3.1 The material requirements for Temperature switch shall in general be according to Clause 3.6.4.5 of Instrumentation Design Criteria and the Material Selection Chart provided in Annexure-II of this specification.

4.3.2 Instrument parts shall be resistant to the corrosive properties of the process fluid and ambient conditions to which they are exposed

4.4 **Accuracy:**

4.4.1 The maximum error shall not exceed 1% of the span. Repeatability shall be ±1% of range.

4.5 **Reading Scale:** Units for Temperature switch shall be in deg. C.

3

4.6 **Enclosure Class:**

4.6.1 The Temperature Switch shall be certified by third party agencies like IEC/FM/UL/BASEEFA/CENELEC/CSA/DGMS/PTB/CMRI/ATEX for Class I, Div. I, Group C & D Hazardous Area.

4.6.2 The enclosure for switches shall be Ex-d type and IP-65 certified.

5.0 INSTALLATION REQUIREMENTS:

5.1 The installation of Temperature Switch shall in general be according to clause 3.6.4.6 of Instrumentation Design Criteria.

5.2 Temperature Switch shall be mounted as close as possible to sensing point. Mountings accessories shall be 316SS or better. All instrument supports shall be galvanized prior to installation.

3

5.3 When switches and other devices are grouped and mounted on an instrument stand it should be in such a manner that removal of each instrument shall be possible without the need to disconnect, dismantle or remove any other instruments or tubing.

6.0 CALIBRATION, INSPECTION & TESTING:

6.1 Calibration, inspection and testing requirements shall in general be as per clause 3.6.4.7.8 of Instrumentation Design Criteria.

7.0 TAGGING & NAMEPLATES:

7.1 Tagging & Nameplate requirements shall in general be according to Clause 3.6.6.1 of Instrumentation Design Criteria.

7.2 The Temperature Switch shall be provided with SS name plate indicating the following:

- Tag Number
- Manufacturer's Name and Model Number
- Element material
- Enclosure classification
- Body material
- TW material

3

ANNEXURE – I

MATERIAL SELECTION CHART FOR THERMOWELL

S. No.	Piping Class	Flange	Thermowell
1.	A1, B1, D1, E1, F1, XF1, F1, PA1, PB1, PD1, PE1, PXF1, PF1, A2, B2, D2, E2, XG1, A1H, A3, B3, A8 (Except Water Injection Service)	CARBON STEEL	SS 316
2.	Injection Water Service	CARBON STEEL	SS 316
3.	Sea Water/Untreated Produced Water	MONEL	MONEL
4.	A4, A6, A9, B9, D9, E9	SS316	SS316
5.	A5	MONEL	MONEL
6.	A7	TITANUM	TITANUM
7.	** A1N, B1N, D1N, E1N, F1N, XF1N, PA1N, PB1N, PD1N, PF1N, XG1N	SS316L/ SS 316	SS316L
8.	A10, B10, D10, E10, F10	SS316L	SS316L
9.	A11, B11, D11, E11, F11, PA11, PB11, PD11, PE11, PF11	HASTELLOY-C/ DUPLEX SS	HASTELLOY-C/ INCONEL 625

[** All wetted parts shall conform to NACE MR-01-75 (Latest edition)]

The MOC shall be as indicated above or better suiting the Process Conditions

3

ANNEXURE – II

THERMOWELL DRAWING FOR TEMPERATURE SWITCH

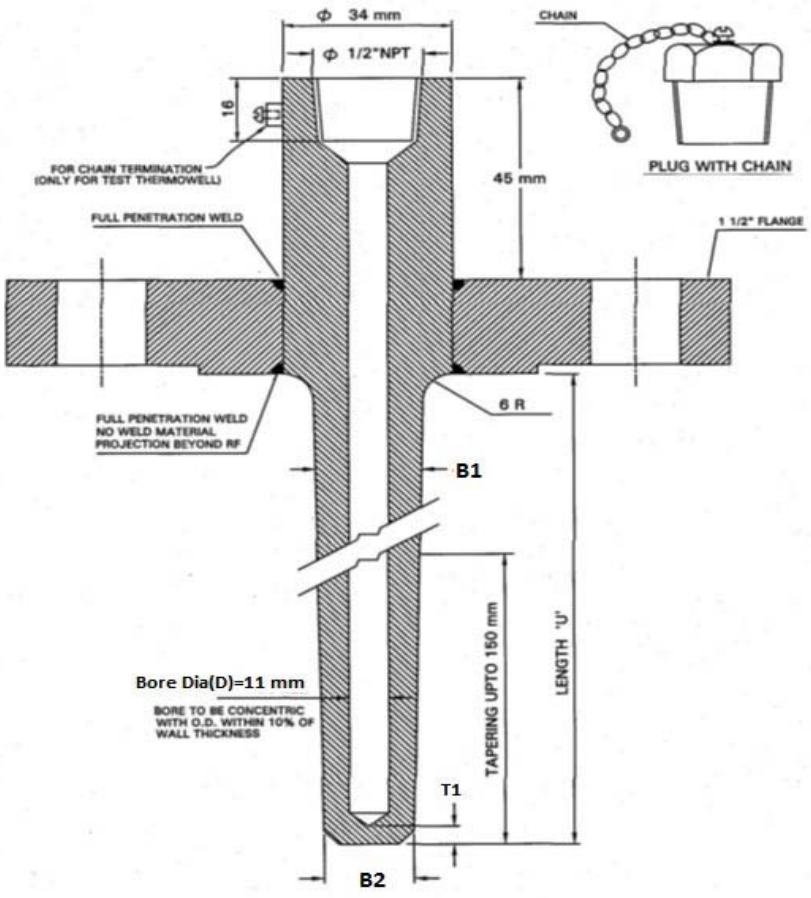

Note:

1) This Drawing is applicable for:
   - (a) 5 Van Stone Thermowell shall be used for 1500#ANSI Rating or equivalent
   - (b) Type shall be RTJ type for ANSI rating >= 600#
   - (c) DP Test shall be carried out for all weld joints.
   - (d) Chain and plug shall be applicable only for test thermowells

Flange Rating	B1 (mm)	B2 (mm)	T1 (mm)	Test Pr. (Kg/cm^2)
Upto 600#	22	18	4	200
Above 600#	25±0.2	18	6.5	400

Note: Thermowells shall be of tapered design in general. If there is any special requirement of straight or stepped thermo-well for any specific process requirement, then prior approval shall be taken by vendor.

ANNEXURE – III

HOOK-UP DRAWING FOR TEMPERATURE SWITCH

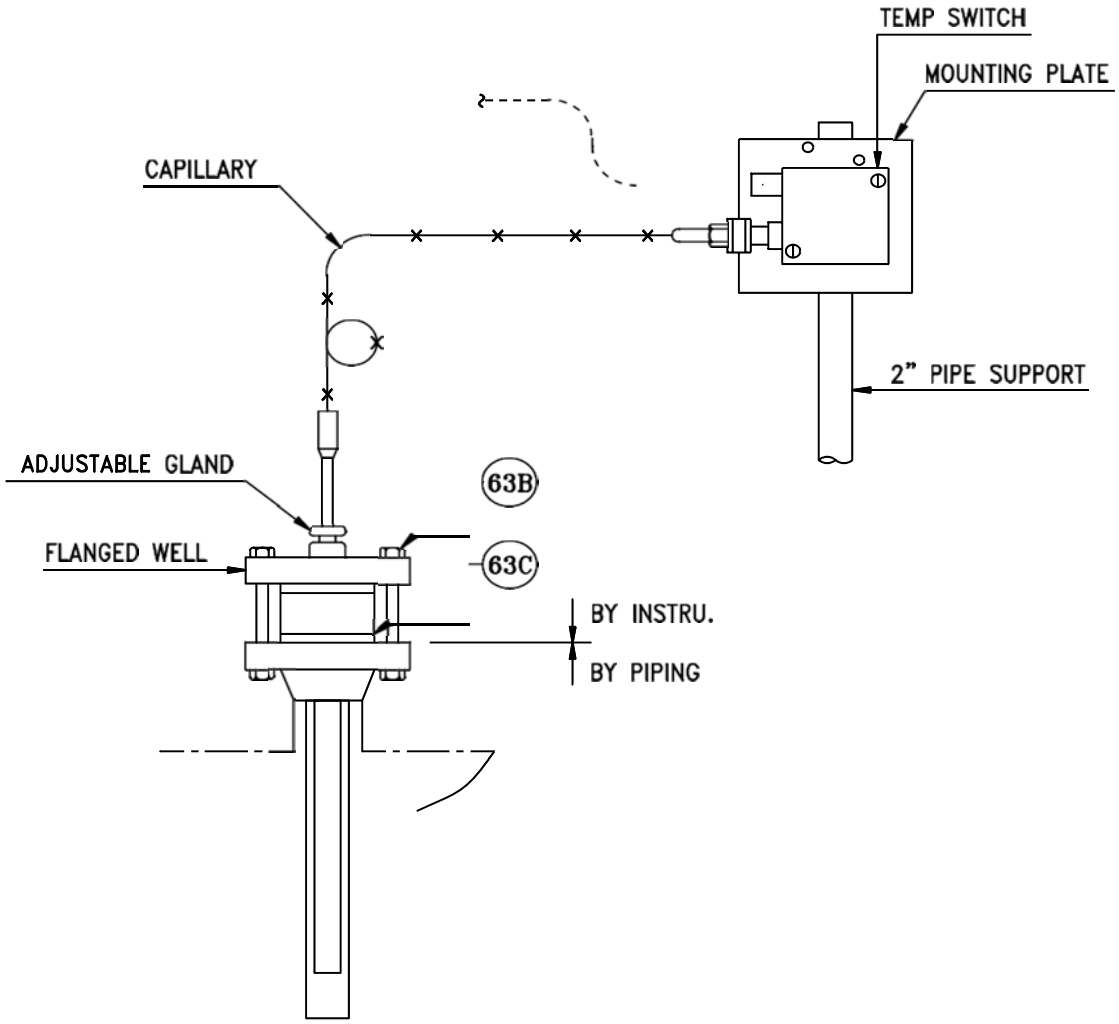

BILL OF MATERIAL				
ITEM	QTY.	SIZE	DESCRIPTION	MATERIAL
63B	–	–	STUD BOLTS & NUTS FOR 1-1/2" FLANGE	BY PIPING
63C	–	–	GASKETS FOR 1-1/2" FLANGE	BY PIPING

ANNEXURE –IV

TYPICAL DATA SHEET FOR TEMPERATURE SWITCH (ELECTRICAL)

ओएनजीसी ONGC	OFFSHORE ENGINEERING SERVICES	FUNCTIONAL SPECIFICATION FOR "TEMPERATURE SWITCH (ELECTRICAL)"	Spec. No. 3301
			Rev. No. 3
			Discipline INSTT.
			Page: 9 OF 9

TEMPERATURE SWITCH

UNITS: - Flow Liquid – M3/HR Gas – SM3/HR Steam – Kg/hr Pressure – kg/cm2 Temperature – degC Level/length -mm

1	Type		**MEASURING UNIT**		
2	Well		25	SAMA Class	
3	Case material		25.1	Compensation	
4	Mounting		26	Bulb Type	
5	Enclosure Enclosure Class		26.1	Bulb Material	
			26.2	Bulb Union Thread	
6	Elec. Area Class		26.3	Bulb Extension Type	
7	Intrinsically Safe		26.4	Bulb Dia	
9	Power Supply for switch		27	Capillary Materials	
			28	Armour flexible	
			29	Armour Material	
10	Accuracy		30	Capillary Length	
			31	Over Range protection	
11	Repeatability		**THERMOWELL**		
SWITCH			32	Material	
13	Electric contact		33	Construction	
14	Qty.		34	Process Connection	
15	Form		35	Gauge Connection	
16	Type		36	Thermo well as per attached Drawing	
17	Contact Rating			**OPTIONS**	
18	Load Type			a) All mounting accessories need to be supplied.	
19	Cable Entry			b) Integral output meter	
20	No. of Entries		37	Make	
21	Set point Adj		38	Model	
22	Differential				

TAG NO.	RANGE	SET POINT	TEMPERAT		WELL DIM.mm		FLANGE		SERVICE	OPTIONS
			NOR.	MAX.	U	T	MATERIAL	#, FACE, FINISH		

NOTE:-

VENDOR SEAL AND SIGNATURE

FUNCTIONAL SPECIFICATION

FOR

TEMPERATURE TRANSMITTER (ELECTRONIC)

PREPARED / REVISED BY	REVIEWED BY	APPROVED BY	TOTAL No. OF PAGES	DATE	REV. No.
SBB	ARD	AS	12	14.12.2017	6
MD	ARD	KM	12	25.01.2016	5
MD	ARD	AKR	11	10.09.2012	4
MD	ARD	AKR	10	16.07.2010	3
VS	SRS	GRP	8	18.02.2008	2
AK	RS	GRP	10	28.03.2007	1
AK	MC	AC	10	25.08.2003	0

CONTENTS

Clause No.	ITEM		Page No.
1.0	Scope of This Document		3
2.0	Reference Documents and Specifications		3
3.0	Scope of Supply		3
4.0	Temperature Transmitter		3
	4.1	General	3
	4.2	RTD	4
	4.3	Thermocouple	5
	4.4	Thermowell	6
	4.5	Other Details of Temperature Transmitter	7
	4.6	Material	7
	4.7	Enclosure class	7
Annexure I	Material Selection Chart for Thermowell		8
Annexure II	Hook-up drawing-Thermowell		9-10
Annexure III	Temperature Transmitter without Thermowell		11
Annexure IV	Data Sheet Format		12

1.0 SCOPE OF THIS DOCUMENT:

This functional specification describes the essential design considerations for the selection of Temperature Transmitter (Electronic) for the intended service.

2.0 REFERENCE DOCUMENTS AND SPECIFICATIONS:

a) Instrumentation/ Process Design Criteria

b) Basic Bid Work

c) Project P & IDs

d) Instrument / Process Data Sheets

3.0 SCOPE OF SUPPLY:

3.1 The quantity to be supplied and installed shall be as per the requirements indicated in the Basic Bid Work, Design Criteria and the P & IDs.

3.2 The vendor shall be responsible for the selection of the Temperature Transmitter suitable for measurement range, accuracy, MOC & standard accessories for its intended application.

3.3 The procurement, tagging, packing, testing & calibration, preparation for shipment, along with accessories, spares, and assistance where required for its installation & commissioning at site shall be under vendor's responsibility.

4.0 TEMPERATURE TRANSMITTER

4.1 GENERAL:

4.1.1 Temperature transmitters shall be integral with the sensing element.

6 4.1.2 The sensing element shall be RTD 3-wire type or Thermocouple, complete with flanged thermowell.

4.1.3 For temperatures upto 350 ºC, measurement shall be by means of Pt-100 RTD as per BS 1904.

4.1.4 Thermocouples shall only be used for measurement of temperatures above 350 ºC, or whenever it can be suitably demonstrated that the mechanical construction of an item does not permit the installation of an RTD.

4.1.5 Surface metal temperatures shall be measured by thermocouples secured to the surface.

4.1.6 Transmitters shall include a Digital indicator scaled in engineering units, and shall be mounted integrally in the head of the detecting element where access permits, otherwise remotely mounted. Where the transmitter indicator is not readily visible a separate loop-powered indicator shall be provided. The output meter shall be suitable for use in the hazardous area.

4.1.7 Transmitters shall be SIL-2 certified "SMART" type and use HART protocol (latest edition) for communication. 6

4.1.8 Transmitters shall be immune to Radio frequency interference due to walkie-talkie, paging system, communication system etc. All electronic modules shall be designed for short circuit protection. Electromagnetic Compliance/Conformity shall be as per EN 61326.

4.1.9 Span shall be continuously adjustable over the transmitter range.

4.1.10 The TT shall be provided with ½"NPT (F) cable entries.

4.1.11 The range shall be selected so that the normal operating temperature shall fall in the middle third of the span.

4.1.12 TT shall have adjustable zero & span facility.

4.1.13 Transmitter instrument shall be Direct mount type or as close as possible to sensing point. Mountings and accessories required for Temperature Instrument shall be 316SS or better.

4.1.14 Temperature Transmitter shall be intrinsically safe and certified by statutory body like UL/FM/BASEEFA/ATEX/CCOE/ PESO or equivalent. The certificate for the same shall be provided with the Purchase Specification.

4.1.15 TT Housing shall be Dual Compartment Type. The terminals shall be accessible without having to expose the sensor electronics portion to the environment.

4.1.16 Instrument parts shall be resistant to the corrosive properties of the process fluid and ambient conditions to which they are exposed.

4.2 RTD:

4.2.1 Supply of the RTD shall be the responsibility of the Transmitter Vendor. The transmitter data sheet shall be containing the RTD details as an attachment and shall be signed by the transmitter vendor.

4.2.2 RTD shall be Pt-100 conforming to relevant standards.

4.2.3 The RTD element length shall be selected to suit the Thermowell insertion length. RTD shall be as per SAMA/IEC-751/DN-43760/ JIS C1604/ BS 1904 standard.

4.2.4 RTD bulb shall be with mechanism suitable for the absorption of vibrations in thermowell / piping. Shall be suitable for vibration resistance upto 3g. Where it is exposed to the vibrations of greater than 3g (Compressor discharge lines, bearing temperatures etc.,), the RTD shall pass the Vibration test as per IEC 60751. Vendor shall submit the third party certificates for the Vibration tests performed at the accredited labs.

4.2.5 Transmitter vendor shall certify the transmitter - sensor matching capability and provide the "alpha" value & CVD constants in the data sheet.

4.2.6 RTD shall be mineral insulated to the industry standards, and Sheath material shall be minimum SS 316 or better to suit the conditions. (S.S.braided for critical machinery application)

4.2.7 Sensor shall have spring loaded adaptor for better connectivity to the circuitry. Wiring shall be multi-strand, enamelled and insulated.

4.2.8 RTD Calibration certificate shall be submitted and Calibration test equipment shall have valid Calibration Certificate from accredited Labs traceable to National/International standards like NIST/NPL/UKAS/NAMAS/JCSS.

4.2.8 Insulation Resistance for thermometer at ambient temperature shall be >100 Mega-Ohms with a test voltage at minimum 100 Volt DC. 6

4.2.9 Thermometers shall be supplied along with Type Test Certificates from reputed 3rd party agencies for 'Insulation resistance at elevated temperatures', 'Thermal Response Time' and 'Self-Heating' tests as per IEC 60751. 6

4.2.10 Resistors shall be supplied along with Type Test Certificates from reputed 3rd party agencies for 'Tolerance', 'Stability at Upper Temperature Limit' and 'Self-Heating' tests as per IEC 60751.

4.2.11 Sensor heads shall be IP65 or Better. Connection Head Enclosure wherever provided shall be Ex-Proof to Class I Div II GR C&D or Zone 2 or equivalent.

4.2.12 Accuracy shall be within + 0.2% of reading. For Custody Transfer applications, it shall be 0.1% of the reading.

4.2.13 Lead wire shall be silver coated Cu wire 28 AWG or thicker, with PTFE insulation.

4.2.14 Vendor shall fill in the CVD values / IEC 751 'A, B, C' values for each of the RTD in the Data sheet.

4.2.15 RTD supplied shall meet the above specifications. RTD has to be sourced from reputed manufacturers, like Rosemount (Emerson), Gayesco (USA), Honeywell Automation, Burns Engineering, Yamari Singapore PTE Ltd., TSS PTE Pvt. Ltd. Singapore, Yokogawa(Japan/ India), ABB-Kent (UK), Honeywell Automation, India Ltd.(India), Fuji (Japan), Ashcroft (USA), Nagano Kelki (Japan), Wika Alexander Weigand SE& Co. KG (Germany), Wika Instruments India Pvt. Limited (India), Baumer Technologies India Pvt. Ltd.(India), Goa Instruments Industries Pvt. Ltd. (India), Gauges Bourdon (I) Pvt. Ltd (India), Thermal Instrument India Pvt. Ltd (India), Pyro Electric Instruments Goa Pvt. Ltd, (India). 6

4.3 THERMOCOUPLE:

4.3.1 Supply of thermocouple shall be the responsibility of the Transmitter Vendor. The transmitter data sheet shall contain the thermocouple details as an attachment and shall be signed by the transmitter vendor.

6 4.3.2 The thermocouple characteristics shall conform to IEC 584-1.

4.3.3 Thermocouples shall normally be the mineral-insulated metal- sheathed type, isolated from earth. Characteristic of mV versus temperature shall conform to BS-4937.

4.3.4 Thermocouples shall be Type K (Chromel-Alumel) for the temperature range –20 ºC to 1000 ºC. For temperature above 1000 ºC, Type R (Platinum/13 % Rhodium-Platinum) shall be used.

4.4 THERMOWELL:

4.4.1 Thermowell shall be installed for all temperature-sensing elements installed on process lines or vessels.

4.4.2 The thermowell shall be suitable for the process media, generally 316 SS, or other material as required by the project piping specification. The thermowell shall be machined from drilled bar stock with minimum wall thickness of 4.8mm, and 6mm bore. Bore shall be concentric with the outside diameter to within 10% of wall thickness. The thermowell shall be provided with hexagonal head as applicable.

4.4.3 MOC for thermowell shall be as per the Annexure-I attached.

4.4.4 Thermowell flanges shall be of minimum # 300.

4.4.5 Welding of flange well shall be full penetration type. Weld shall be dye penetrate checked as per BS 5500.

4.4.6 Material and finish of gasket should be suitable for RTJ flanges having 63 µinch AARH (max) surface finish and shall conform to ANSI B16.5.

4.4.7 Thermometer well shall have ½" NPT female thread for element and 1½" flanged for vessel or piping connection.

4.4.8 Thermowells to be used as test wells shall be provided with a stainless steel screwed plug and chain.

4.4.9 Wells for insulated vessels and lines shall have extension necks.

4.4.10 The thermowell tip shall be at centerline of pipe but immersion length shall not exceed 400 mm for higher size pipes.

4.4.11 Thermowell shall be designed to withstand vibration stresses caused by stream velocity. Also, the Natural Frequency of the thermowell shall be calculated applying all the factors like fluid mass, added sensor mass, non-uniform profile beam, and mounting compliance. After all the correction factors are applied, the "in-situ", or installed natural frequency, f^{c}_{n}, is calculated and used for the rest of the frequency analysis. The steady state frequency (Wake frequency at maximum flow velocity), f_{s}, shall be less than 40% of the corrected natural frequency of the Thermowell or shall satisfy the condition $0.6f^{c}_{n} < f_{s}$(steady state) $< 0.8f^{c}_{n}$. The Contractor shall provide calculations as per ASME PTC 19.3 TW-2016/latest, and the justification for the final selection of the thermowell.

4.4.12 Thermowell welding shall be full penetration type with 'U' length as follows:

2" Pipeline	-	Approx. 200 mm (with Expander & Wake Freq. 80%)
4" to 6" lines	-	280 mm
Above 6"	-	320 mm
Vessels	-	400 mm

4.4.13 The typical thermowell installation shall be as per Annexure – II & III of this specification.

4.4.14 TT Vendor shall be responsible for the supply of Thermowell (from any of the TG or TT vendors enlisted in ONGC Suggested Vendor List) along with the wake frequency calculation. Datasheet and wake frequency calculation sheet shall be signed and stamped by the TT Vendor. 6

4.5 OTHER DETAILS OF TEMPERATURE TRANSMITTER

4.5.1 **Accuracy:** Digital accuracy of the transmitter shall be ±0.1% of FSD.

6

4.5.2 **Repeatability:** ±0.1%.

4.5.3 **Output Signal:** Output signal shall be 2 wired 4-20 mA DC, and capable of delivering the rated current signal into external load of around 600 ohms when powered with 24V DC (negative earthed).

4.6 MATERIAL

4.6.1 The material requirements for TT shall in general be according to clause 3.6.4.5 of Instrumentation Design Criteria

4.6.2 Transmitter body studs shall be high tensile stainless steel, or other corrosion-resistant material for higher stress levels.

4.6.3 Instrument parts shall be resistant to the corrosive properties of the process fluid and ambient conditions to which they are exposed.

4.7 ENCLOSURE CLASS

The transmitter shall be weatherproof (IP 65 or better). Housing for TT shall be constructed from 316SS/Epoxy coated Copper-free (i.e. less than 0.4% copper by mass) die-cast Aluminium, suitable for harsh offshore environment. 6

ANNEXURE – I

Material Selection Chart for Thermowell

S. No.	Piping Class	Well	Flange
1	A1, B1, D1, E1, F1, XF1, F1, PA1, PB1, PD1, PE1, PXF1, PF1, A2, B2, D2, E2, XG1, A1H, A3, B3, A8	SS316	SS316
2	Sea Water / Untreated Produced Water	MONEL	MONEL
3	A4, A6, A9, B9, D9, E9	SS316	SS316
4	A5	MONEL	MONEL
5	A7	TITANUM	TITANUM
6	** A1N, B1N, D1N, E1N, F1N, XF1N, PA1N, PB1N, PD1N, PF1N, XG1N	SS316L	SS316L
7	A10, B10, D10, E10, F10	SS316L	SS316L
8	A11, B11, D11, E11, F11, PA11, PB11, PD11, PE11, PF11	HAST-C	HAST-C

[** **All** wetted parts of Thermowell shall conform to NACE MR-01-75 (Latest edition).]

ANNEXURE – II
HOOK UP DRAWING – THERMOWELL for RTD

FLANGED TYPE

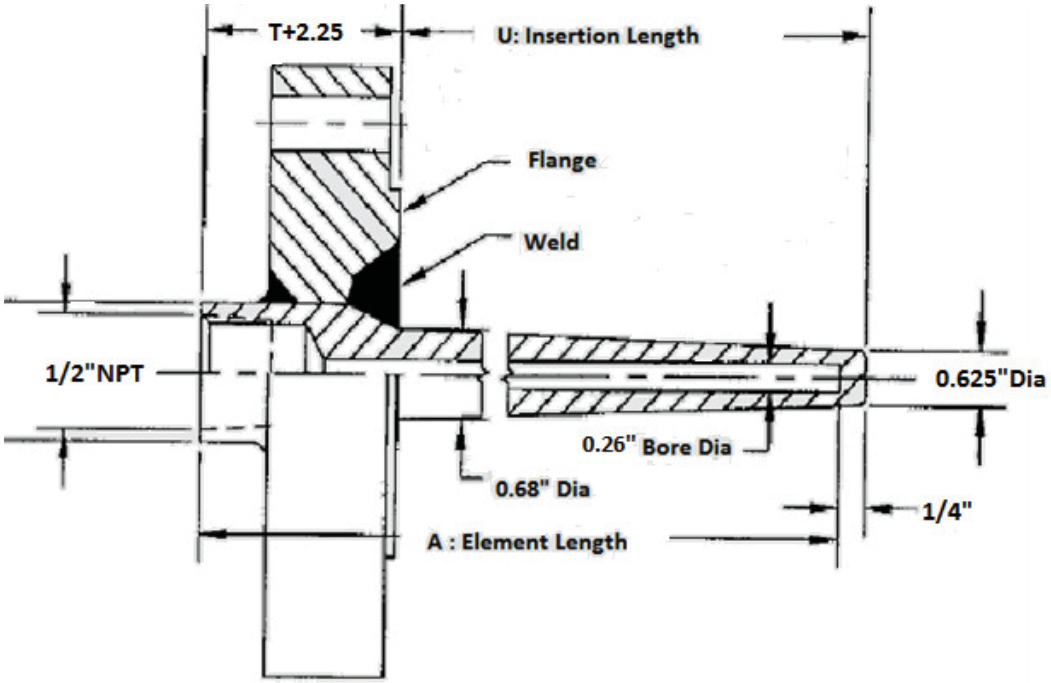

THREADED TYPE

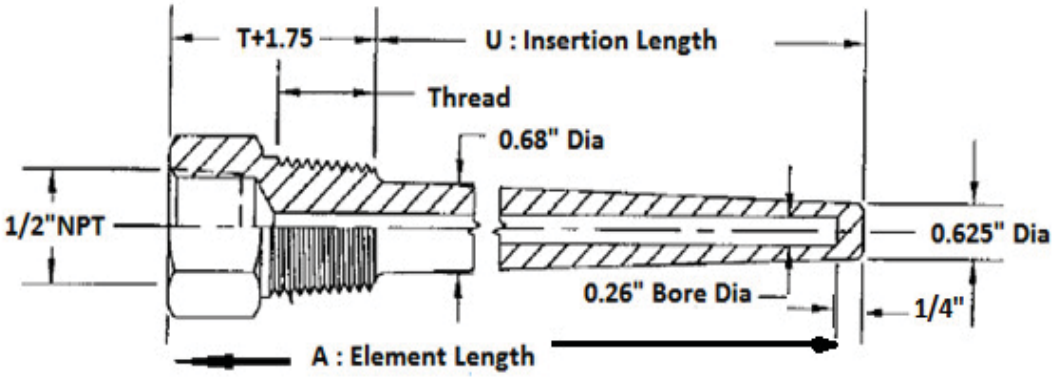

T= Lag Length

Thermowell Drawing for Thermocouple

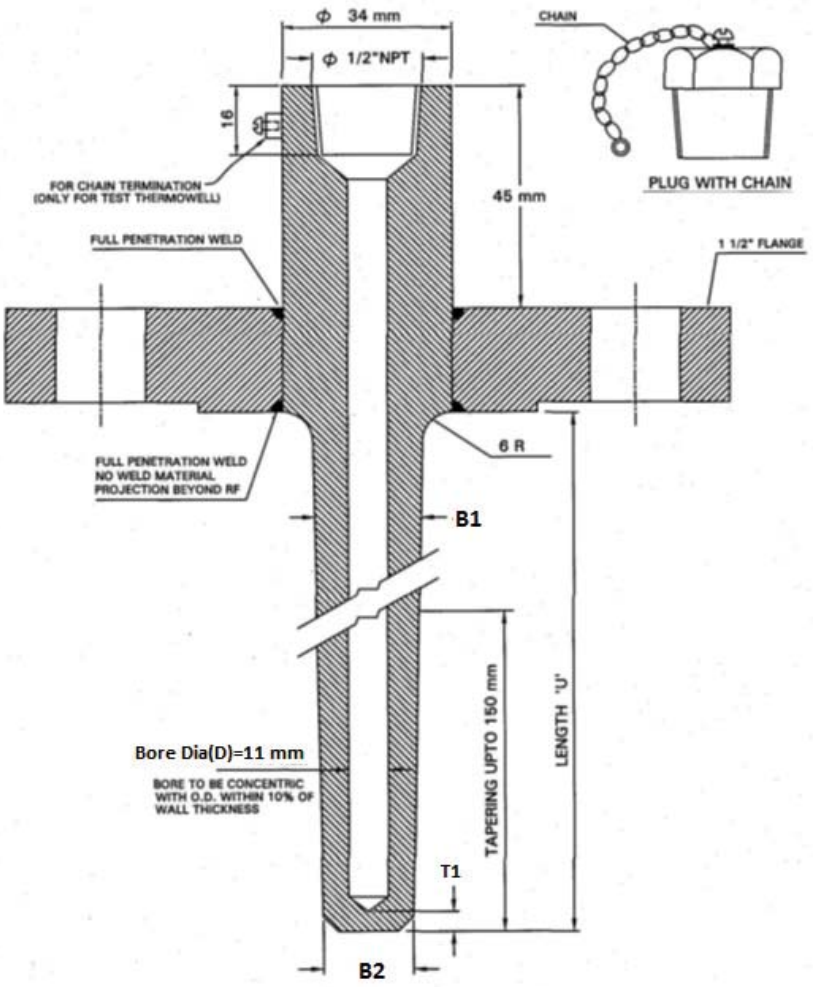

Note:

1) This Drawing is applicable for:
(a) 5 Van Stone Thermowell shall be used for 1500#ANSI Rating or equivalent
(b) Type shall be RTJ type for ANSI rating >= 600#
(c) DP Test shall be carried out for all weld joints.
(d) Chain and plug shall be applicable only for test thermowells

Flange Rating	B1 (mm)	B2 (mm)	T1 (mm)	Test Pr. (Kg/cm^2)
Upto 600#	22	18	4	200
Above 600#	25±0.2	18	6.5	400

Note: Thermowells shall be of tapered design in general. If there is any special requirement of straight or stepped thermo-well for any specific process requirement, then prior approval shall be taken by vendor.

Annexure-III

Temperature Transmitter without Thermowell

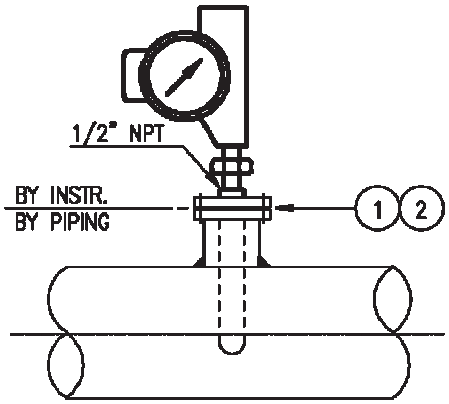

VERTICAL MOUNTING

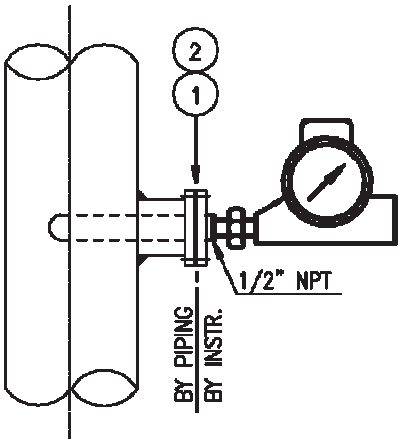

HORIZONTAL MOUNTING

(1)- FLANGE WITH GASKET (RF /RTJ) AS PER PIPING STANDARD

(2)- STUD BOLTS & NUTS ASTM A320 GR.L7M/A194 GR.7M WITH HOT DIPGALVANIZED TO ASTM A153, AS PER THE REQUIREMENT

ANNEXURE – IV

TYPICAL DATA SHEET – TEMPERATURE TRANSMITTER

TEMPERATURE TRANSMITTERS					
UNITS :- Flow Liquid – M3/HR Gas – NM3/HR Steam – Kg/hr Pressure – kg/cm2 Temperature – deg C Level/length -mm					
1	Function		**MEASURING UNIT**		
2	Type		15	SAMA Class	
3	Case		15.1	Compensation	
4	Mounting		16	Bulb Type	
5	Enclosure		16.1	Bulb Material	
	Enclosure Class		16.2	Bulb Union Thread	
6	Elec. Area Class		16.3	Bulb Extension Type	
7	Intrinsically Safe		16.4	Bulb Dia	
8	Power Supply		17	Capillary Materials	
9	Power Supply for Transmitter		18	Armour flexible	
10	Cable Entry		19	Armour Material	
11	Accuracy		20	Capillary Length	
12	Repeatability		21	Over Range protection	
			THERMOWELL		
TRANSMITTER			22	Material	
13	Output		23	Construction	
14	Trans Power Supply		24	Process Connection	
			25	Gauge Connection	
			26	Thermowell as per Drawing	
RTD/ Thermocouple			***OPTIONS***		
Make & Model No./Type					
Thermowell					
Make & Model No.					

TAG No.	*RANGE*	TEMPERAT		WELL DIM		FLANGE		SERVICE	OPTIONS
		NOR.	MAX.	U	*T*	*MATERIAL*	RATING, FACE, FINISH		
AS PER									
P& ID									

NOTE:-

VENDOR SEAL AND SIGNATURE

	Offshore Design Section Engineering Services ISO – 9001:2008	FUNCTIONAL SPECIFICATION FOR "DIFFERENTIAL PRESSURE GAUGE"	Spec. No.	3400
			Rev. No.	7
			Discipline	Instt
			Page: *1 OF 9*	

FUNCTIONAL SPECIFICATION

FOR

"DIFFERENTIAL PRESSURE GAUGE"

Prepared / Revised By	Reviewed By	Approved By	Total No. of Pages	Date	Rev. No.
Swami	[illegible]	K. Madhu		25.02.16	
SS	ARD	KM	9	25.02.2016	7
SS	ARD	AKR	8	24.08.2012	6
SS	ARD	AKR	7	30.08.2011	5
VS	SRS	GRP	7	18.02.2008	4
ET	RS	GRP	9	28.03.2007	3
ET	MC	RK	9	23.06.2005	2
ET	MC	RK	9	03.01.2005	1
ET	MC	AC	9	25.08.2003	0

FORMAT No.	Ref. PROCEDURE No.	ISSUE No.	REV. No.	REV. DATE:
ODS/SOF/004	ODS/SOP/023	01	00	21.07.2010

CONTENTS

Clause No.	ITEM		Page No.
1.0	Scope of This Document		3
2.0	Codes and Standards		3
	2.1 2.2	Standards Reference documents	3
3.0	Scope of Supply		3
4.0	Differential Pressure gauge		3
	4.1	General	3
	4.2	Material	4
	4.3	Range	5
	4.4	Accuracy	5
	4.5	Reading scales	5
Annexure I	Hook-up drawing		7
Annexure II	Material Selection chart		8
Annexure III	Data Sheet Format		9

1.0 SCOPE OF THIS DOCUMENT:

1.1 This functional specification describes the essential design considerations for the selection of Differential Pressure Gauge for the intended service.

2.0 CODES & STANDARDS:

2.1 **Standards :**

a) ASME B 40 .100 – latest edition : Pressure gauges and gauge attachments

b) EN - 837 - (Part 2 & 3)- latest edition: Pressure gauges Dimensions, metrology, requirements and testing

2.2 **Reference Documents :**

a) Instrumentation Design Criteria

b) Basic Bid Work

c) Project P & IDs

d) Process Design Criteria / Instrument Process Data Sheets

3.0 SCOPE OF SUPPLY:

3.1 The quantity to be supplied and installed shall be as per the requirements indicated in above reference documents.

3.2 The vendor shall be responsible for the selection of the Differential Pressure gauge suitable for its intended application, its procurement, tagging, packing, testing & calibration, preparation for shipment, along with accessories, spares, and assistance where required for its installation & commissioning at site.

4.0 DIFFERENTIAL PRESSURE GAUGE:

4.1 **General:**

4.1.1 Differential Pressure gauges shall be used for local indication. Differential Pressure Gauge may be Field mounted or Panel mounted based on the requirements.

4.1.2 Dial size of Field mounted gauges shall not be less than 6" (150 mm). Process connection for these gauges shall be ½ " NPTM , generally with bottom entry .

4.1.3 Dial size of Panel mounted differential pressure gauges shall be of preferably 6"or 4" . Process connections for these gauges shall be ½ " NPTM with back entry .

4.1.4 For packaged items. In case of space constraints, 4" Dial size Gauge may be accepted 7

4.1.5 Differential Pressure gauges shall in general be heavy duty, weatherproof , white coloured dial with black numerals & markings and with black pointer.

4.1.6 Position of blowout disc shall be preferably rear mounted where ever not possible, top mounted can be considered.

4.1.7 Gauges shall have external or internal zero micrometer adjustment .Gauge pointers shall be adjustable without removal from shaft. 7

4.1.8 Differential Pressure gauge measuring element shall generally be Bellows / Diaphragm type. Diaphragm seals shall be used for measurement of slurries, viscous and chemicals (effluent/ injection services etc.). Diaphragm seals with capillary shall in general be 1 ½" flanged.

4.1.9 Additionally, where damping is required for gauges, differential pressure gauge shall be liquid filled or any other proven (with PTR) advanced damping technology can be used (without liquid filled damping) to arrest the process fluctuations and vibrations due to installation. Glycerin / Silicone oil shall generally be used for liquid filling. Liquid filled gauges (considering both process and ambient temperature limits) shall have a small vapor space for thermal expansion of liquid fill.

4.1.10 Differential Pressure gauge enclosure shall be weather proof to NEMA 4 / IP 65 or better. Over range protection of 130 % of maximum static pressure shall be provided without affecting its calibration / accuracy.

4.1.11 Gauges located on lines subjected to pulsating pressures (such as all pumps, compressors discharge service etc.) shall be provided with Snubber type pulsation dampeners.

4.1.12 Gauge savers shall be provided wherever specified to prevent the gauge when maximum working pressure exceeds 130% of maximum static pressure. Gauges in vacuum service shall have over range protection to full vacuum. A visible Stop Pin shall be used to restrict the upper limit of the pointer travel.

4.1.13 DPG shall be installed in such way that length of impulse lines is kept minimum.

4.1.14 Mandatory spare instruments shall be provided as 10% minimum or 1 (one), whichever is more of each type and range. 7

4.2 **Material:**

4.2.1 Material requirements for pressure gauges shall in general be according to Annexure –II : Material selection chart and clause 3.6.4.5 of Instrumentation Design Criteria. 7

4.2.2 Process connections and 'Material of construction' of all wetted parts shall be compatible with the process fluid however it shall be SS 316 minimum. 7

4.2.3 Material for Pointer shall be SS 316 or Aluminium.

4.2.4 Material for movement shall be SS 316.However for liquid filled gauges SS 304 can be accepted.

4.2.5 Case material for all Differential Pressure gauges shall be SS 316 with a screwed bezel / bayonet bezel retaining ring and weatherproof design.

4.2.6 Window material shall be of Shatter-proof glass or 'fully transparent' acrylic plastic.

4.2.7 Gauge saver, snubber (whenever used) and manifold shall be of the same material as that of the pressure element. 7

4.3 **Range :**

4.3.1 Range shall be selected such that at zero differential pressure, pointer will be at starting point of the scale. However only for Vacuum applications, Pointer position will be at the centre of the scale.

4.4 **Accuracy :**

4.4.1 Accuracy shall be +/- 1 % of the span or better. However for Low Static pressure applications (i.e 0 to 1 kg/cm^2) accuracy can be +/- 1.6 % of FSD or better.

4.4.2 Change in process conditions shall not affect the accuracy of gauge.

4.5 **Testing & Inspection as per ASME B 40 .100 :** 7

4.5.1 Test Requirement of Pressure Gauges according to EN 837-3: 1996:-

1. Leak Test
2. Accuracy and Hysteresis
3. Influence of Mounting Position
4. Temperature Effects
5. Temperature in Service
6. Storage Temperature
7. Degree of Protection
8. Endurance – Steady Pressure, over-pressure & cyclic pressure
9. Effects of Mechanical Vibration
10. Effects of Mechanical shock
11. For safety pattern Gauges: Blowout test & Energy release test

4.5.2 Inspection /Acceptance Test at Factory / Manufacturer Premises for pressure Gauge:-

1. Visual Inspection
2. Dimensional Verification
3. Accuracy
4. Leak Test
5. Degree of Protection

4.5.3 Tests indicated in (4.5.1) but not covered in Inspection/Acceptance Test (4.5.2) for Pressure Gauge are to be covered in Type Test. However, Accuracy & Hysteresis test shall be included in Type Tests. The type test requirement will be for each model and range. The type tests are to be witnessed by DNV/LLOYDS/BV/TUV/NABL/Govt. Laboratory etc. Valid type test certificate shall be provided along-with the supply.

4.5.4 Each type test certificate should indicate its validity period (Normally 5 years). The same has to be seen at the time of delivery/supply.

4.5.5 Inspection/Acceptance Test shall be as per company provided IRT 7

4.6 **Reading Scales:**

4.6.1 Indicating scale shall be direct reading type . It shall have scale as 'mm H_2O'/ 'mm H_g' / 'PSI' as per process requirements.

ANNEXURE – I

(Hook Up Drawing)

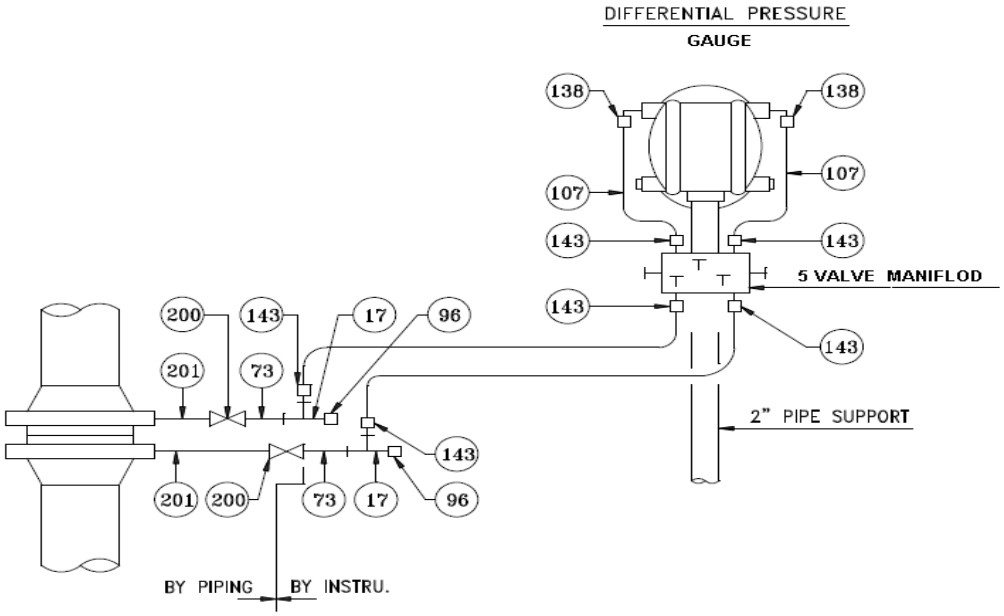

ITEM	QTY	SIZE	DESCRIPTION
17	2	½" NPTF	TEE , THKxTHKxTHK,
73	2	½" NPTM	NIPPLE , 3" LONG , PL x THK x THK x THK,
96	2	½" NPTM	PLUG , SCRD
107	A/R	½"OD x 0.065 THK	TUBING
138	2	½" THK x ½" OD NPTM	MALE CONNECTOR ,
143	6	½" THK x ½" OD NPTM	MALE CONNECTOR ,
			5 VALVE MANIFOLD
200	-	-	VALVE - BY PIPING
201	-	-	NIPPLE - BY PIPING

ANNEXURE – II

7

Material Selection Chart for Diff Pressure Gauges

Sr. No	Piping Class	Element Material
1.	A1, B1, D1, E1, F1, XF1, F1, PA1, PB1, PD1, PE1, PXF1, PF1, A2, B2, D2, E2, XG1, A1H, A3, B3, A8 (EXCEPT WAT. INJ. SERVICE)	SS316
2.	Raw seawater and treated water service	Monel
3.	A4, A6, A9, B9, D9, E9	SS316
4.	A5	Monel
5.	A7	SS316
6.	A1N, B1N, D1N, E1N, F1N, XF1N, PA1N, PB1N, PD1N, PF1N, XG1N	SS316L
7.	A10, B10, D10, E10, F10	SS316L
8.	A11, B11, D11, E11, F11, PA11, PB11, PD11, PE11, PF11	Hastalloy C
9.	A23, B23, D23, E23, F23, PA23, PB23, PD23, PE23, PF23	Hastalloy C

For Sour service applications, MOC shall be compliant to NACE MR-01 75 requirements.

ANNEXURE – III

TYPICAL DATA SHEET – DIFFERENTIAL PRESSRUE GAUGE

DIFFERENTIAL PRESSURE GAUGES

UNITS :- Flow Liquid – M3/HR Gas – NM3/HR Pressure – kg/cm2 Temperature – deg C Level/length -M

1	Type		15	Diaphragm Seal (wherever required)		
2	Mounting			a)	Type	
3	Dial Size/Colour			b)	Wetted Parts	
4	Case Material			c)	Other Material	
5	Bezel Ring			d)	Process Connection	
6.	Window Material			e)	Facing & Finish	
7	Enclosure Class			f)	Capillary Material	
8	Pressure Element			g)	Armour type	
9	Element Material			h)	Armour Material	
10	Socket Material			i)	Capillary Length	
11	Accuracy			j)	Flushing Filling Conn.	
12	Zero Adjustment		16	Over range protection		
13	Connection & Location		17	Blow out protection		
14	Movement		18	Options		
15	Diff Pressure Range & Scale			a)	Snubber	
				b)	Siphon	
				c)	Gauge saver	
				d)	Liquid filled casing	
				e)	Vacuum protection	
				f)	Space ring	
				g)	Solid front	

TAG No.	RANGE	OPER. PRESSURE	MAX. SERVICE TEMP.	OPER. TEMP	MAX. SERVICE TEMP.	FLUID	SERVICE	OPTIONS

NOTE:-

VENDOR SEAL AND SIGNATURE

ओएनजीसी ONGC	OFFSHORE ENGINEERING SERVICES	FUNCTIONAL SPECIFICATION FOR PRESSURE GAUGE	Spec. No.	3401
			Rev. No.	8
			Discipline	Instrumentation
			Page: *1 OF 9*	

FUNCTIONAL SPECIFICATION

FOR

PRESSURE GAUGE

Prepared / Revised By	Reviewed By	Approved By	Total No. of Pages	Date	Rev. No.
Rakti Sayena	[signature]	[signature]	9	25/3/19	8
RS	ARD	AS	9		8
SS	ARD	KM	9	25.02.2016	7
SS	ARD	AKR	8	23.08.2012	6
SS	ARD	AKR	7	31.03.2011	5b
SS	ARD	AKR	7	18.11.2010	5a
SS	ARD	AKR	7	04.05.2010	5
VS	SRS	GRP	7	18.02.2008	4
ET	RS	GRP	9	28.03.2007	3
ET	MC	RK	9	23.06.2005	2
ET	MC	RK	9	03.01.2005	1
ET	MC	AC	9	25.08.2003	0

CONTENTS

Clause No.	ITEM		Page No.
1.0	Scope of This Document		3
2.0	Codes and Standards		3
	2.1 2.2	Standards Reference documents	3
3.0	Scope of Supply		3
4.0	Pressure gauge		3
	4.1	General	3
	4.2	Material	4
	4.3	Range	5
	4.4	Accuracy	5
	4.5	Testing & Inspection	5
	4.6	Reading scales	5
Annexure I	Hook-up drawing		7
Annexure II	Material Selection chart		8
Annexure III	Data Sheet Format		9

1.0 SCOPE OF THIS DOCUMENT:

1.1 This functional specification describes the essential design considerations for the selection of Pressure Gauge for the intended service.

2.0 CODES & STANDARDS:

2.1 Standards:

a) ASME B 40 .100 – latest edition: Pressure gauges and gauge attachments

b) EN - 837 - (Part 1, 2 & 3)- latest edition: Pressure gauges Dimensions, metrology, requirements and testing

2.2 Reference Documents:

a) Instrumentation Design Criteria

b) Basic Bid Work

c) Project P & IDs

d) Process Design Criteria / Instrument Process Data Sheets

3.0 SCOPE OF SUPPLY:

3.1 The quantity to be supplied and installed shall be as per the requirements indicated in the Basic Bid Work, Design Criteria and P & IDs.

3.2 The vendor shall be responsible for the selection of the Pressure gauge suitable for its intended application, its procurement, tagging, packing, testing & calibration, preparation for shipment, along with accessories, spares, and assistance where required for its installation & commissioning at site.

4.0 PRESSURE GAUGE:

4.1 General:

4.1.1 The pressure gauges shall be used for local indication. Pressure Gauge may be Field mounted or Panel mounted based on requirements.

4.1.2 Dial size of field mounted gauges shall not be less than 6" (150 mm). Process connection for these gauges shall be ½" NPTM with bottom entry.

4.1.3 Dial size of Panel Mounted Type Pressure gauges shall be of preferably 6" or 4". Process connection for these gauges shall be ½" NPTM with back entry.

4.1.4 For packaged items. In case of space constraints, 4" Dial size Gauge may be accepted

4.1.5 Instrument air/gas supply gauges for instruments like positioners, smart instruments etc, used as output gauge may have 2" (50 mm) dials.

4.1.6 Pressure gauges shall in general be heavy duty, weatherproof, with white colored dial with black numerals & markings and with black pointer.

4.1.7 Position of blowout disc shall be preferably rear mounted where ever not possible, top mounted can be considered.

4.1.8 Gauges shall have external or internal zero micrometer adjustment .Gauge pointers shall be adjustable without removal from shaft.

8 4.1.9 Pressure gauge measuring element shall generally be Bourdon/Bellows/ Diaphragm type. Diaphragm seals shall be used for measurement of slurries, viscous and chemicals (effluent/ injection services etc.). Diaphragm seals with capillary shall in general be 1½" flanged. For corrosive fluids, in lieu of diaphragm seal, measuring element of suitable material can be considered for such services. For diaphragm seal with capillary, bleed-cum-calibration port shall be provided between the instrument-isolation valve and diaphragm seal.

4.1.10 Additionally, where damping is required for gauges, pressure gauge shall be liquid filled or any other proven (with PTR) advanced damping technology can be used (without liquid filled damping) to arrest the process fluctuations and vibrations due to installation. Glycerin / Silicone oil shall generally be used for liquid filling. Liquid filled gauges (considering both process and ambient temperature limits) shall have a small vapor space for thermal expansion of liquid fill.

4.1.11 Pressure gauge enclosure shall be weather proof to NEMA 4/ IP 65 or better. Pressure gauge shall be capable of withstanding 130% of maximum range without affecting its calibration/accuracy.

4.1.12 Gauges located on lines subjected to pulsating pressures (such as all pumps, compressors discharge service etc.) shall be provided with Snubber type pulsation dampeners.

4.1.13 Gauge savers shall be provided wherever specified to prevent the gauge when maximum working pressure exceeds 130% of range. Gauges in vacuum service shall have over range protection to full vacuum. A visible Stop Pin shall be used to restrict the upper limit of the pointer travel.

8 4.1.14 Mandatory spare instruments shall be provided as 10% minimum or 1 (one), whichever is more of each type and range.

4.1.15 Mandatory associated accessories (i.e., snubber, gauge saver, siphon etc.) shall be provided as 10% minimum or 1 (one), whichever is more for the total quantity installed.

4.2 Material:

4.2.1 Material requirements for pressure gauges shall in general be according to Annexure –II: Material selection chart and clause 3.6.4.5 of Instrumentation Design Criteria.

4.2.2 Process connections and 'Material of construction' of all wetted parts shall be compatible with the process fluid however it shall be SS 316 minimum.

4.2.3 Material for Pointer shall be SS 316 or Aluminium. Movement material for liquid filled gauges can be SS 316 or SS 304. For gauges with other proven technology (without liquid filled damping), movement material shall be SS 316.

4.2.4 Case material for all pressure gauges shall be SS 316 with a screwed bezel / bayonet bezel retaining ring and weatherproof design.

4.2.5 Window material shall be of Shatter-proof glass or 'fully transparent' acrylic plastic.

4.2.6 Gauge saver, snubber (whenever used) and manifold shall be of the same material as that of the pressure element.

4.3 Range:

4.3.1 Range shall be selected such that the normal operating pressure lies approximately in the middle third of full scale.

4.4 Accuracy:

4.4.1 Accuracy shall be +/- 1 % of the span or better. However for 0-1 Kg/cm^2g (pressure range) accuracy shall be ±1.6% of FSD or better.

4.4.2 Change in process conditions shall not affect the accuracy of gauge.

4.5 Testing & Inspection as per ASME B 40 .100:

4.5.1 Test Requirement of Pressure Gauges according to EN 837-1 & 3: 1996:-

1. Leak Test
2. Accuracy and Hysteresis
3. Influence of Mounting Position
4. Temperature Effects
5. Temperature in Service
6. Storage Temperature
7. Degree of Protection
8. Endurance – Steady Pressure, over-pressure & cyclic pressure
9. Effects of Mechanical Vibration
10. Effects of Mechanical shock
11. For safety pattern Gauges: Blowout test & Energy release test

4.5.2 Inspection /Acceptance Test at Factory / Manufacturer Premises for pressure Gauge:-

1. Visual Inspection
2. Dimensional Verification
3. Accuracy
4. Leak Test
5. Degree of Protection

4.5.3 Tests indicated in (4.5.1) but not covered in Inspection/Acceptance Test (4.5.2) for Pressure Gauge are to be covered in Type Test. However, Accuracy & Hysteresis test shall be included in Type Tests. The type test requirement will be

for each model and range. The type tests are to be witnessed by DNV/LLOYDS/BV/TUV/NABL/Govt. Laboratory etc. Valid type test certificate shall be provided along-with the supply.

4.5.4 Each type test certificate should indicate its validity period (Normally 5 years). The same has to be seen at the time of delivery/supply.

4.5.5 Inspection/Acceptance Test shall be as per company provided IRT.

4.6 Reading Scales:

4.6.1 Indicating scale shall be direct reading type. Reading Scale used for 2" dial size gauges shall be 'PSI' and for other dial size gauges, it shall be Kg/cm^2g unless otherwise specified in bid documents.

ANNEXURE – I

(Hook Up Drawing)

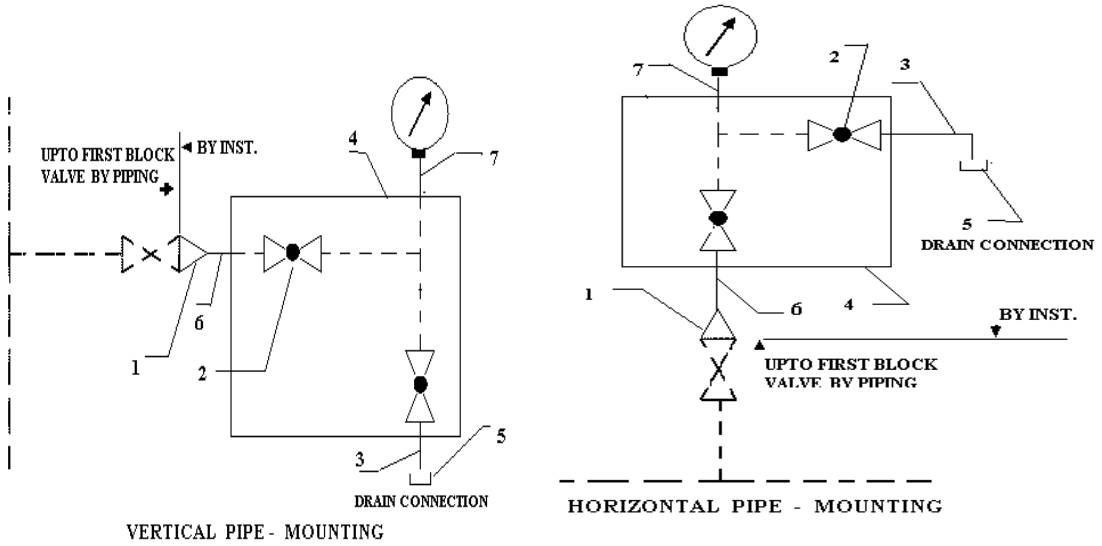

Note: For Sour Gas service drain valve shall be ball valve and drain connection shall be connected to closed drain.

BILL OF MATERIAL			
ITEM NO	QUANTITY	DESCRIPTION	SIZE
1	1	SWAGE NIPPLE , PL x TH	¾ ” X ½ ” NPTM
2	2	NEEDLE VALVE , SCRWD	½ ” NPT
3	1	PIPE NIPPLE	½ ” NPTM
4	1	3-WAY ,2-VALVE MANIFOLD	
5	1	CAP	½” NPTF
6 & 7	2	MALE CONNECTOR	½” NPT
		TUBINGS	½” NPTM

8

8

ANNEXURE – II
Material Selection Chart for Pressure Gauges

S. No.	Piping Class	Element Material
1.	A1, B1, D1, E1, F1, XF1, F1, PA1, PB1, PD1, PE1, PXF1, PF1, A2, B2, D2, E2, XG1, A1H, A3 (above 2”), B3 (above 2”), A4, A8	SS316/ SS PH17/4
2.	A3 (upto2”), B3(upto2”), D3 (upto2”), A6, A9, B9, D9, E9	SS316
3.	A5	MONEL
4.	A12	Titanium
5.	A1N, B1N, D1N, E1N, F1N, XF1N, PA1N, PB1N, PD1N, PF1N, XG1N	SS316/ SS316L (NACE)
6.	A10, B10, D10, E10, F10, A22	SS316L (NACE)
7.	A23, B23, D23, E23, F23, PA23, PB23, PD23, PE23, PF23	DUPLEX SS (UNS-32205)
8.	-----	Hastalloy-C

For Sour service applications, MOC shall be compliant to NACE MR-01 75 requirements.

ANNEXURE – III
TYPICAL DATA SHEET – PRESSURE GAUGE

PRESSURE GAUGES

UNITS :- Flow Liquid – M3/HR Gas – NM3/HR Pressure – kg/cm2g Temperature – deg C Level/length -M

1	Type		16	Diaphragm Seal (wherever required)		
2	Mounting			a)	Type	
3	Dial Size/Colour			b)	Wetted Parts	
4	Case Material			c)	Other Material	
5	Bezel Ring			d)	Process Connection	
6.	Window Material			e)	Facing & Finish	
7	Enclosure Class			f)	Capillary Material	
8	Pressure Element			g)	Armour type	
9	Element Material			h)	Armour Material	
10	Socket Material			i)	Capillary Length	
11	Accuracy			j)	Flushing Filling Conn.	
12	Zero Adjustment		17	Over range protection		
13	Connection & Location		18	Blow out protection		
14	Movement		19	Options		
15	Manifold :			a)	Snubber	8
a)	Make			b)	Siphon	
b)	Model			c)	Gauge saver	
c)	Material			d)	Liquid filled casing	
				e)	Vacuum protection	
				f)	Space ring	
				g)	Solid front	
				h)	SS tag plate	
				i)	2 valve manifold	

TAG No.	RANGE	OPER. PRESSURE	MAX. SERVICE TEMP.	OPER. TEMP	MAX. SERVICE TEMP.	FLUID	SERVICE	OPTIONS

NOTE:-

VENDOR SEAL AND SIGNATURE

FUNCTIONAL SPECIFICATION

FOR

PRESSURE SWITCH (ELECTRICAL)

PREPARED/ REVISED BY	REVIEWED BY	APPROVED BY	TOTAL NO. OF PAGES	DATE	REV. NO.
Rakhi Saxena 20/2/23	20/2/23	20/02/23	10	20/02/2023	4
RS	YD	SA	10	20.02.2023	4
VK	CNN	SRS	9	02.07.2021	3
VS	SRS	GRP	8	18.02.2008	2
AK	SRS	AC	9	28.03.2007	1
AK	MC	AC	9	13.05.2003	0

Table of Contents

1.0 SCOPE OF THIS DOCUMENT 3

2.0 CODES & STANDARDS/ REFERENCE DOCUMENTS & SPECIFICATIONS 3

3.0 SCOPE OF SUPPLY 3

4.0 PRESSURE SWITCH (ELECTRICAL) 3

5.0 MANIFOLD SPECIFICATIONS 4

6.0 INSTALLATION REQUIREMENTS 5

7.0 CALIBRATION, INSPECTION & TESTING 5

8.0 TAGGING & NAMEPLATES 5

ANNEXURE – I: MATERIAL SELECTION CHART 6

ANNEXURE-II : HOOK-UP DRAWINGS 7

ANNEXURE-III : TYPICAL INSTRUMENT DATASHEET FOR PRESSURE SWITCH (ELECTRICAL) 9

1.0 SCOPE OF THIS DOCUMENT

This Functional Specification describes the essential design considerations for the selection of Pressure Switch (Electrical) for the intended service.

2.0 CODES & STANDARDS/ REFERENCE DOCUMENTS & SPECIFICATIONS

a) Instrumentation Design Criteria

b) Basic Bid Work

c) Project P&IDs

04 **d)** Process Design Criteria/ Instrument Process Data Sheets

3.0 SCOPE OF SUPPLY

3.1 The quantity to be supplied and installed shall be as per the requirements indicated in the Basic Bid Work and the P&IDs.

3.2 The Vendor shall be responsible for the selection of the Pressure Switch (Electrical) suitable for its intended application, its procurement, tagging, packing, testing & calibration, preparation for shipment along with accessories, spares and assistance wherever required for its installation & commissioning at site. This FS shall be read in conjunction with the Instrument Design Criteria.

4.0 PRESSURE SWITCH (ELECTRICAL)

4.1 General

04 4.1.1 The Pressure Switch shall be of Electrical Type.

4.1.2 The switch mechanism shall be a hermetically sealed micro switch of SPDT/ DPDT, snap action type.

4.1.3 Arcing during making or breaking of switch contacts shall be minimum. The switch contacts shall have long life and minimum wear. The material chosen for switch contact shall have good thermal conductivity for dissipating heat.

4.1.4 There shall be minimum bounce during making and breaking of switch contacts and switch mechanism shall be designed to minimize the vibration.

4.1.5 Wherever the switch is exposed to the process fluid, the switch element shall be selected in such a way that it can withstand an over-range pressure of 1.5 times maximum range without loss of calibration.

04 4.1.6 The switch shall have 2 Nos. ½” NPTF cable entries. Unused cable entry shall be plugged with suitable explosion-proof plug.

4.1.7 The contact rating of head mounted SPDT/ DPDT hermetically sealed switch (potential free contact) shall be minimum 1A for 24 VDC, 0.2A for 110 VDC or 3A for 250/ 125 VAC. The rating shall be chosen for the application and interlock/ alarm circuit of the loop.

4.1.8 Dead band shall be less than the difference between the normal operating pressure and set point

4.1.9 Pressure switches shall be heavy duty having user adjustable set point. Adjustment screw/ bolt shall have lock-nut and protection cover.

4.1.10 Pressure switches shall be calibrated at given set points. Vendor shall ensure that set point falls between 35% and 70% of adjustable range of the selected model in general.

4.1.11 Micro switch shall be provided as mandatory spare. The quantity shall be 10% minimum or 1 (one), whichever is more of each type.

04 4.1.12 All switches shall be Ex-d certified.

4.1.13 The SIL-capability of pressure switches shall be based on requirements of Basic Bid Work.

4.2 Sensor Type and Process Connections:

4.2.1 Pressure sensing element shall preferably be of diaphragm type suitable for process requirements.

4.2.2 The process connection shall be 316SS threaded ½" NPTF from the bottom side.

4.2.3 For measurement of slurries, corrosive, high viscous, congealing process fluid or very high pressure (#1500 class or more), Remote Diaphragm Seals shall be used. Where Remote Diaphragm Seals are used, they shall be "Liquid filled System" type with a ½" flanged process connection and flexible armor (steel). The diaphragm seal shall also have a flushing filling connection with plug.

4.3 Material:

4.3.1 The material requirements for Pressure Switch shall be in general according to Clause 3.6.4.5 of Instrumentation Design Criteria and the Material Selection Chart provided in Annexure-I below.

04 4.3.2 Instrument parts shall be resistant to the corrosive properties of the process fluid and ambient conditions to which they are exposed.

4.4 Accuracy: The maximum error shall not exceed 1% of the span. Repeatability shall be ±1% of Full Scale Range (FSR).

4.5 Calibration Scale: Units for Pressure switch shall be in kg/cm2.

04 **4.6 Enclosure Class:**

4.6.1 The Pressure Switch shall be certified by third party agencies like IEC/ FM/ UL/ BASEEFA/ CENELEC/ CSA/ PTB/ CMRI/ ATEX for Class I, Div. I, Group C & D Hazardous Area.

4.6.2 The enclosure for switches shall be Ex-d type and minimum IP-65 rated.

5.0 MANIFOLD SPECIFICATIONS

5.1 Pressure Switch shall be tested and supplied with a 3-Way Manifold.

5.2 Manifold shall be integral type (mono block) unit either from the Switch vendor or from a reputed Vendor.

Switch vendor shall take the responsibility of the complete assembly.

5.3 MOC shall be as per the wetted parts requirements for the switch.

5.4 Manifold details shall be filled in the data sheet provided in Annexure-III below for review and approval.

6.0 INSTALLATION REQUIREMENTS

6.1 The installation of Pressure Switch shall be in general according to clause 3.6.4.6 of Instrumentation Design Criteria.

04 6.2 Pressure Switch shall be mounted as close as possible to sensing point. Mountings accessories shall be 316SS or better. All instrument supports shall be galvanized prior to installation.

6.3 When switches and other devices are grouped and mounted on an instrument stand it should be in such a manner that removal of each instrument and impulse lines shall be possible without the need to disconnect, dismantle or remove any other nearby instruments or tubing.

7.0 CALIBRATION, INSPECTION & TESTING

Calibration, inspection and testing requirements shall be in general as per clause 3.6.4.7.8 of Instrumentation Design Criteria.

8.0 TAGGING & NAMEPLATES

8.1 Tagging & Nameplate requirements shall be in general according to Clause 3.6.6.1 of Instrumentation Design Criteria.

8.2 The Pressure Switch shall be provided with SS name plate indicating the following information as a minimum:

- Tag Number
- Manufacturer's Name and Model Number
- Electrical Rating
- Adjustable Pressure Range
- Enclosure Classification
- Element Material
- Body Material

04 ANNEXURE – I: MATERIAL SELECTION CHART

SNo.	Piping Class	Material	
		Sensor	Wetted Part & Manifold
1	A1, B1, D1, E1, PE1	SS 316L or better	SS 316
	A2, B2, D2, E2		
	XG1		
	A3, B3, D3		
	A8		
2	Water Injection Service	MONEL	MONEL/ SUPER DUPLEX STEEL
3	A4, A9, B9, D9, E9	HASTELLOY C	SS 316
4	A6	HASTELLOY C	SS 316L
5	A5	MONEL	MONEL
6	A22, B22, D22, E22	TITANIUM	HASTELLOY C
7	**A1N, B1N, D1N, E1N, F1N, G1N, PB1N, PD1N, XG1N	SS 316L	SS 316L
8	A10, B10, D10, E10, F10	HASTELLOY C	SS 316 L
9	A23, B23, D23, E23, F23, G23	TITANIUM	HASTELLOY C

Note-1: For the service description of above piping classes, refer Piping Material Specification (PMS).
Note-2: **All process wetted parts shall be as per NACE MR-01-75 (Latest Edition) as minimum.
Note-3: The MOC of all parts shall be as indicated above or better suitable for the process conditions.
Note-4: Where the offered MOC is different than the above, Vendor shall give the justification of it being better material and suitable for the process conditions.
Note-5: For any piping class not covered above, Vendor shall follow material specified in PMS and/ or P&ID.

ANNEXURE-II : HOOK-UP DRAWINGS

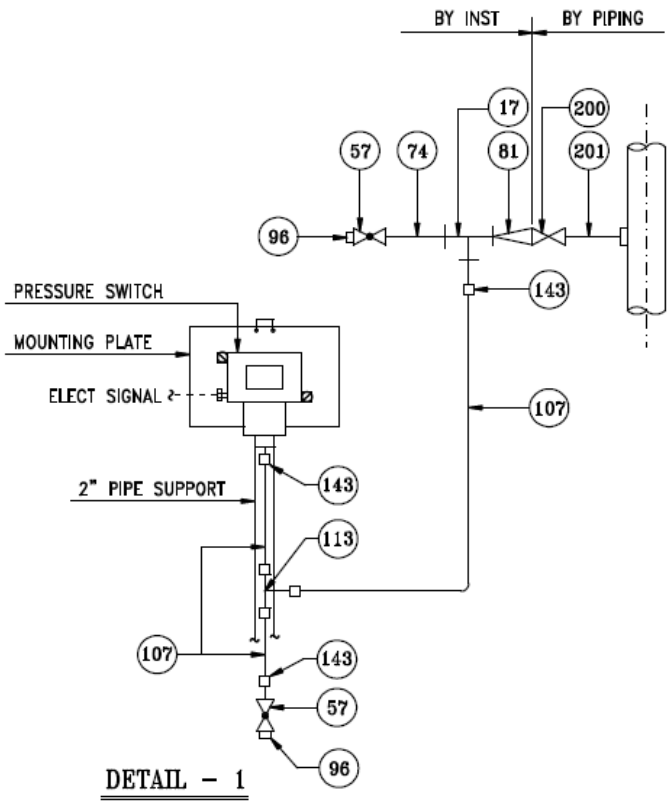

DETAIL – 1

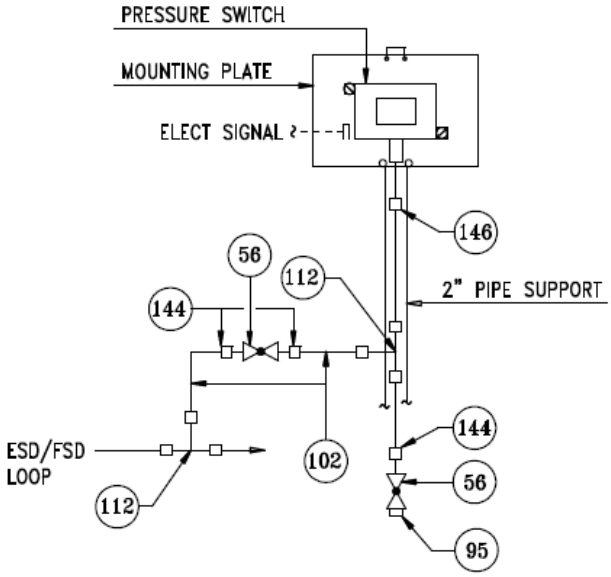

DETAIL-2

ANNEXURE-II Contd.

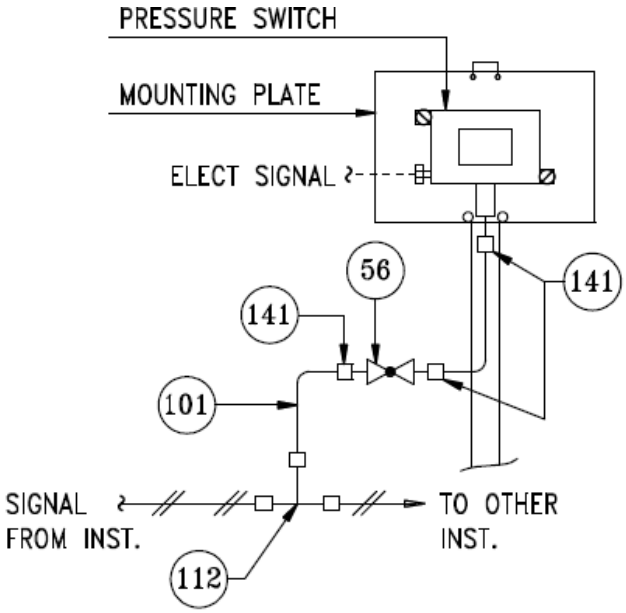

DETAIL – 3

BILL OF MATERIAL

ITEM	QTY.FOR			SIZE	DESCRIPTION	MATERIAL
	DET.1	DET.2	DET.3			
17	1	–	–	1	PIPE TEE , TH x TH x TH, NPTF	
74	1	–	–	1/2"	PIPE NIPPLE, SMLS, 3"LONG, TH x TH, NPTM	
81	1	–	–	3/4" x 1/2"	SWAGE NIPPLE, CONC., SMLS, PL x TH (OR) TH x TH, NPTM	
95	–	1	–	1/4"	PIPE PLUG, SCRD NPTM	SS 316
96	2	–	–	1/2"	PIPE PLUG, SCRD NPTM	
57	2	–	–	1/2"	GLOBE VALVE, SCRD NPTF	
56	–	2	1	1/4"	GLOBE VALVE, SCRD NPTF	SS 316
101	–	–	A/R	1/4"OD x 0.035"THK.	TUBING	SS 316
102	–	A/R	–	3/8"OD x 0.035"THK.	TUBING	SS 316
107	A/R	–	–	1/2"OD x 0.065"THK.	TUBING	
111	–	–	1	1/4"OD x 1/4"OD x 1/4"OD	TUBING TEE	SS 316
112	–	2	–	3/8"OD x 3/8"OD x 3/8"OD	TUBING TEE	SS 316
113	1	–	–	1/2"OD x 1/2"OD x 1/2"OD	TUBING TEE	
141	–	–	3	1/4"THK. x 1/4"OD	MALE TUBING CONNECTOR, NPTM	SS 316
143	3	–	–	1/2"THK. x 1/2"OD	MALE TUBING CONNECTOR, NPTM	
144	–	3	–	1/4"THK. x 3/8"OD	MALE TUBING CONNECTOR, NPTM	SS 316
146	–	1	–	1/2"THK. x 3/8"OD	MALE TUBING CONNECTOR, NPTF	SS 316
200	–	–	–	–	VALVE	BY PIPING

04 ANNEXURE-III : TYPICAL INSTRUMENT DATASHEET FOR PRESSURE SWITCH (ELECTRICAL)

PRESSURE SWITCH (ELECTRICAL)					
Units | Flow: Liquid – m^3/hr, Gas – sm^3/hr, Steam – kg/hr | Pressure : kg/cm^2g | Temp. : degC | Level/ Length : mm | Density : m^3/hr | Viscosity : cP |					
General	1.	Tag No.			
	2.	P&ID No.			
	3.	Equipment/ Line Number			
	4.	Service			
	5.	Hazardous Area Classification			
	6.	Weatherproof Protection			
	7.	NACE Compliance- NACE MR-01-75 (Latest Edition)			
Process Conditions	8.	Fluid State			
	9.	Operating Pressure (Min/ Normal/ Max)			
	10.	Operating Temperature (Min/ Normal/ Max)			
	11.	Design Pressure	Design Temperature		
	12.	Density			
	13.	Viscosity			
	14.	Corrosive Compounds			
	15.	Alarm/ Shutdown			
	16.	Set-Point High (kg/cm2g)			
	17.	Set-Point Low (kg/cm2g)			
Sensor Details and Switch Attributes	18.	Manufacturer	Model No.		
	19.	Switch Type (SPDT/ DPDT)			
	20.	Sensor Type			
	21.	Sensor Material			
	22.	Process Connection			
	23.	Electrical Current Rating on : 24VDC/ 110 VDC/ 250 VAC/ 125 VAC			
	24.	Fail Safe - Normally Open/ Close			
	25.	Adjustable Range			
	26.	Fixed Dead Band			
	27.	Adjustable Dead Band			
	28.	Manual Reset			
	29.	Accuracy			
	30.	Repeatability			
	31.	SIL Certification, if applicable			
	32.	IP Rating			
	33.	Enclosure Protection/ Hazardous Area Classification Certification			
	34.	Enclosure Material			
	35.	Cable Entry			
	36.	Plug for Spare Entry			
	37.	Over-Range Protection			
	38.	Full Vacuum Protection			
Remote Diaphragm Seal (if applicable)	39.	Diaphragm Seal Material			
	40.	Capillary Length			
	41.	Capillary Material			

	42.	Capillary Fill Fluid			
	43.	Flange Size/ Rating			
	44.	Flange Material			
	45.	Flushing Ring Material			
	46.	Flushing Ring Connection			
	47.	Drain/ Vent Valve For Flushing Ring			
	48.	Armour Material			
	49.	Remote Seal Make	Remote Seal Model		
Accessories	50.	Mounting Type			
	51.	Mounting Bracket Material			
	52.	Adapter			
	53.	Dampener			
Manifold	54.	Type			
	55.	Material			
	56.	Connection Size (Impulse side)	Vent/ Drain Size		
	57.	Manufacturer	Model No.		

Notes:

Vendor's Sign & Stamp

FUNCTIONAL SPECIFICATION

FOR

"PRESSURE TRANSMITTER (ELECTRONIC)"

PREPARED / REVISED BY	REVIEWED BY	APPROVED BY	TOTAL No. OF PAGES	DATE	REV. No.
RAKHI SAXENA	YOGESH DUDANI	S. Ravi Sankar	9	27.06.2022	7
RS	YD	SRS	9	27.06.2022	7
MD	ARD	KM	8	28.01.2016	6
MD	ARD	AKR	6	28.08.2012	5
MD	ARD	AKR	6	30.03.2011	4A
MD	ARD	AKR	6	16.07.2010	4
VS	SRS	GRP	6	18.02.2008	3
AK	BK	GRP	8	28.03..2007	2
AK	BK	GRP	8	31.08.2006	1
AK	MC	AC	8	25.08.2003	0

CONTENTS

CLAUSE NO.	ITEM		PAGE NOS.
1.0	Scope of This Document		3
2.0	Reference Documents and Specifications		3
3.0	Scope of Supply		3
4.0	Pressure Transmitter Specifications		3
	4.1	General	3
	4.2	Sensor Type	4
	4.3	Material	4
	4.4	Accuracy	5
	4.5	Output signal	5
	4.6	Repeatability	5
	4.7	Stability	5
	4.8	Enclosure Class	5
5.0	Manifold Specifications		5
Annexure-I	Typical Hook up Drawing		7
Annexure-II	Pressure Transmitter – Material Selection Chart		8
Annexure-III	Typical Instrument Datasheet for Pressure Transmitter		9

1.0 SCOPE OF THIS DOCUMENT

1.1 This functional specification along with datasheets, IDC, P&IDs and associated bid documents specifies the requirements for design, selection, sizing, testing, documentation and shipping of Pressure Transmitter (Electronic), its materials and accessories.

2.0 REFERENCE DOCUMENTS AND SPECIFICATIONS

7

a. Basic Bid Work
b. Design Criteria - Process & Instrumentation
c. Project P&IDs
d. Process Data Sheets for Instruments

3.0 SCOPE OF SUPPLY

7

3.1 The quantity to be supplied, installed and commissioned shall be as per the requirements indicated in the Basic Bid Work and approved P&IDs specific to the project.

3.2 The vendor shall be responsible for the selection and supply of the Pressure-Transmitters suitable for measurement range, accuracy, MOC & standard accessories including valve manifold for its intended application.

3.3 The procurement, tagging, packing, testing & calibration, preparation for shipment, along with accessories, spares, and assistance wherever required for its installation & commissioning at site shall be Vendor's responsibility.

4.0 PRESSURE TRANSMITTER SPECIFICATIONS

4.1 GENERAL

4.1.1 HART (Latest edition) type Transmitters shall be SIL-2 Certified.

4.1.2 Transmitters shall be immune to Radio frequency interference due to walkie-talkie, paging system, communication system etc. All electronic modules shall be designed for short circuit protection.

4.1.3 The PT shall be provided with ½"NPT (F) cable entries.

7

4.1.4 All transmitters shall be provided with Digital integral output meters (with engineering units) visible from grade. Where the display is not visible from grade, blind transmitter (intrinsically safe) with separate loop power indicator shall be provided. Same shall be suitable for use in the hazardous area as per Clause 3.6.4.4.5 a) & Clause 3.6.4.4.5 d) of Instrumentation Design Criteria.

4.1.5 PT shall have easily approachable zero and span adjustment facility.

4.1.6 Over range protection shall be 130% of range or maximum pressure whichever is higher.

4.1.7 Transmitter shall be furnished with all necessary weather and anti-corrosion protection to prevent damage from saline and corrosive process atmosphere.

7

4.1.8 All pressure instruments shall be mounted as close as possible to sensing point. The transmitter shall be mounted local, on a yoke. All mounting accessories required for 2" pipe shall be provided.

4.1.9 The Transmitter shall be intrinsically safe and certified by statutory body like UL/FM/BASEEFA/CCOE/PESO.

4.1.10 'Universal Hand Held Configurator' shall be supplied for transmitters' calibration/ Configuration/ Diagnostics. The number of Configurator' shall be two per process platform & one per well platform.

4.1.11 Vent and drains of the transmitter/tubing/valve manifolds shall be routed to drain header. If the meter is on sour service and harmful fluids like chemical etc. then it will be routed to close drain header with isolation valves.

7

4.2 SENSOR TYPE

4.2.1 The pressure element in the measuring unit shall be Diaphragm Type.

4.2.2 The process connection of the transmitter shall be from the bottom side, 316SS threaded ½" NPTF.

4.2.3 For measurement of slurries, viscous & corrosive fluid, very high pressures (#1500 Class or more), Remote Diaphragm Seals shall be used. Wherever remote diaphragm seals are used, they shall be "Liquid Filled System" type with a 1½" Flanged process connection and flexible armor (steel). The diaphragm seal flange shall also have a flushing filling connection with plug.

4.3 MATERIAL

4.3.1 The material requirements for the PT shall be in general according to the Material Selection Chart provided at Annexure – II of this document.

4.3.2 Instrument parts shall be resistant to the corrosive properties of the process fluid and ambient conditions to which they are exposed.

4.3.3 All wetted parts shall be suitable for intended process application as a minimum. Associated piping, pipe fitting & piping valves etc. shall be according to FS-2004A for Piping Design (2008) & Piping Material Specification.

4.3.4 Transmitter body studs shall be high tensile stainless steel, or other corrosion-resistant material for higher stress levels.

7 **4.3.5** The Wetted parts of the remote diaphragm seal type PT shall be same as that of the element material. The capillary material of remote diaphragm seal type PT shall be SS 316 and the armour material shall be as a minimum SS 304. Fill-fluid shall be silicone oil or as recommended by Vendor.
It shall be transmitter-vendor's responsibility to select, test & supply of total system.

7 **4.4 ACCURACY**

Transmitters shall have an accuracy of ±0.1 % of span or better. For remote seal transmitters, accuracy shall be ±0.2% of span or better.

4.5 OUTPUT SIGNAL

4.5.1 Output signal shall be 2 wired 4-20 mA DC and capable of delivering the rated current signal into external load of around 600 ohms when powered with nominal 24V DC (negative earthed).

4.5.2 Transmitters shall have HART protocol for communication, remote calibration and diagnostics from HART maintenance system.

4.6 REPEATABILITY

Transmitters shall have a repeatability of ±0.1%.

7 **4.7 STABILITY**

Transmitters shall have a maximum stability of ±0.2% of URL for 5 years.

4.8 ENCLOSURE CLASS

The transmitter shall be weatherproof (IP 65 or better). Aluminium enclosure for Transmitters shall be certified as copper free i.e. less than 0.4% copper by mass and suitably coated for harsh offshore environment.

7 **5.0 MANIFOLD SPECIFICATIONS**

5.1 Pressure Transmitters shall be tested & supplied with a 3-way-2 valve manifold.

5.2 Differential Pressure Transmitters shall be tested & supplied with a 5-way-5 valve manifold.

5.3 Manifold (3-valve, 2 way OR 5-valve, 5 way) shall be integral type (mono block) unit supplied by the Transmitter vendor or outsourced by the instrument vendor from a reliable manufacturer.

5.4 Transmitter with the Instrument valve manifold shall be assembled in the transmitter vendor factory, leak tested and hydro tested [1.5 times MAWP (Max. allowable working pressure)] with

random witnessed to be done by TPI. Selected manifold & valves shall be as per ANSI B16.5 & tested in accordance with standard - MSS-SP-99-2016 or latest.

5.5 MOC shall be as per the wetted parts requirements for the transmitter, with material traceability certificates with heat & lot no. as per standard (EN 102043.1) and same shall be submitted during inspection to CA/TPI (ONGC).

5.6 Manifold details shall be filled in the data sheet for review and approval of the PS.

5.7 Transmitter vendor shall take the responsibility of the whole system.

ANNEXURE-I

(Typical Hook Up Drawing)

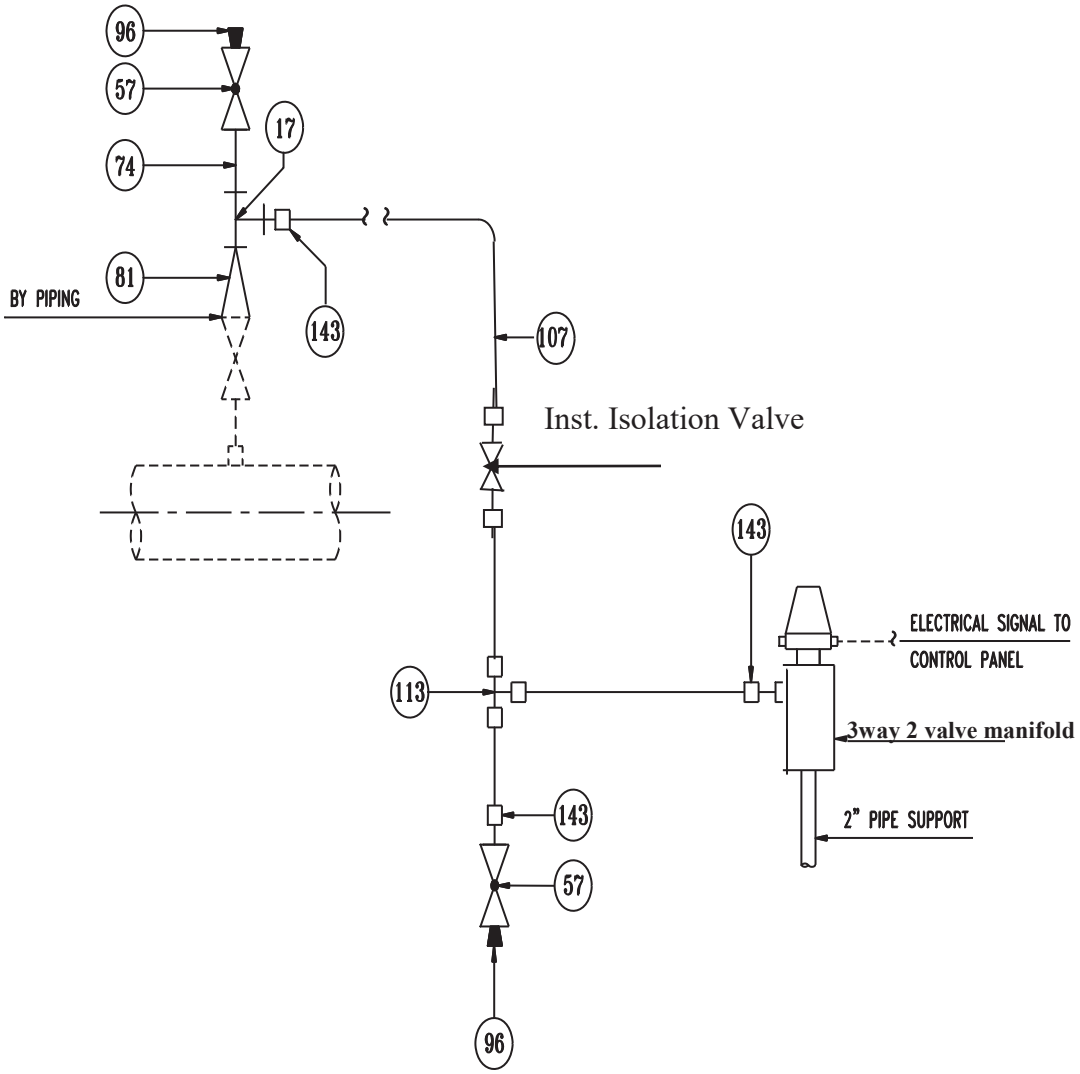

BILL OF MATERIAL				
ITEM	QTY.	SIZE	DESCRIPTION	MATERIAL
17	1	1/2"	PIPE TEE THxTHxTH NPTF	
57	2	1/2"	GLOBE VALVE SCRWD. NPTF	
74	1	1/2"	PIPE NIPPLE SMLS	
81	1	3/4 x 1/2"	SWAGE NIPPLE PLxTH NPTM	
96	1	1/2"	PIPE PLUG NPTM SCREWED	
107	A/R	1/2"ODx0.065"THK	TUBING	
113	1	1/2"x1/2"x1/2"OD	TUBING TEE	
143	3	1/2"TH.x1/2"OD	MALE TUBING CONNECTOR	

ANNEXURE – II

7

Pressure Transmitter– Material Selection Chart

Sl. No.	Service Description	Refer to PMS for Piping Class	Transmitter	
			Sensor	Wetted Part & Valve Manifold
1	Vent Gas, Blow Down, Process Hydrocarbon Drain, Nitrogen, Chemical, Process Drain Water, Diesel Fuel, Hydrocarbon Liquid and vapor. (Except water injection service)	A1, B1, D1, E1, PE1	SS 316L or better	SS 316
	Glycol	A2, B2, D2, E2		
	Acidization	XG1		
	Instrument air	A3, B3, D3		
	Overboard lines	A8		
2	Water Injection Service	Refer PMS	MONEL	MONEL/ Super Duplex Steel
3	Potable water, Lube Oil & Service Oil, Chemical	A4, A9, B9, D9, E9	HASTALLOY C	SS 316
4	Gas Turbine & Engine Exhaust	A6	HASTALLOY C	SS 316L
5	Raw Sea Water & Fire Water	A5	MONEL	MONEL
6	Chemicals	A22, B22, D22, E22	TITANIUM	HASTALLOY C
7	Corrosive Hydrocarbon service, Sour liquids and vapour	**A1N, B1N, D1N, E1N, F1N, G1N, , PB1N, PD1N, XG1N	SS 316L	SS 316L
8	Corrosive Hydrocarbon service, Sour liquids and vapour	A10, B10, D10, E10, F10	HASTALLOY C	SS 316 L
9	Corrosive Hydrocarbon service, Sour liquids and vapour	A23, B23, D23, E23, F23, G23	TITANIUM	HASTALLOY C

Note 1: **All process wetted parts shall be as per NACE MR-01-75 (Latest Edition) as minimum.
Note 2: Where the offered MOC is different than the one indicated above, Vendor shall provide the justification of it being better material and suitability to the Process fluid & Process Conditions.
Note 3: For any Service description not covered above, Vendor to follow material specified in PMS and/or P&ID.
Note 4: The MOC shall be as indicated above or better suiting the Process Conditions.

7

Annexure-III

Typical Instrument Datasheet for Pressure Transmitter

PRESSURE TRANSMITTER					
Units | Flow: Liquid – m^3/hr, Gas – sm^3/hr, Steam – kg/hr | Pressure : kg/cm^2g | Temp. : degC | Level/Length : mm | Density : m^3/hr | Viscosity : cP |					
General	1	Tag no.			
	2	P&ID No.			
	3	Equip/Line Number			
	4	Service			
	5	Hazardous Area Classification			
	6	NACE Compliance- NACE MR-01-75 (Latest Edition)			
Process Conditions	7	Fluid state			
	8	Corrosive Compounds			
	9	Operating Pressure (Min/Normal/Max)			
	10	Operating Temperature (Min/Normal/Max)			
	11	Design Pressure			
	12	Design Temperature			
	13	Density			
	14	Viscosity			
Transmitter	15	Function			
	16	Local Indicator			
	17	Indicator Scale			
	18	Over-Range Protection			
	19	Accuracy			
	20	Repeatability			
	21	Stability			
	22	Power Supply			
	23	Output Signal			
	24	User Configurable Discrete Outputs, if any			
	25	SMART Communication (Y/N)			
	26	SIL Certification			
	27	IP Rating			
	28	Enclosure Protection/ Hazardous Area Classification Certification			
	29	Enclosure Material			
	30	Zero & Span Adjustment			
	31	Cable Entry			
	32	Plug for Spare Entry			
	33	Instrument Range (Min/Max)			
	34	Calibrated Range (Min/Max)			
	35	Manufacturer	Model No.		
Sensor	36	Sensor Type			
	37	Sensor Material			
	38	Body Static Pressure Rating			
	39	Process Connection Size			
	40	Sensor Fill Fluid			
Remote Diaphragm Seal (if applicable)	41	Diaphragm Seal Material			
	42	Capillary Length			
	43	Capillary Material			
	44	Capillary Fill Fluid			
	45	Flange Size / Rating			
	46	Flange Material			
	47	Flushing Ring Material			
	48	Flushing Ring Connection			
	49	Drain/Vent Valve For Flushing Ring			
	50	Armour Material			
	51	Remote Seal Make	Remote Seal Model		
Accessories	52	Mounting Type			
	53	Mounting Bracket Material			
Valve Manifold	54	Type			
	55	Material			
	56	Connection Size (Impulse side)	Vent/Drain Size		
	57	Manufacturer	Model No.		

Notes:

Vendor's Sign & Stamp

FUNCTIONAL SPECIFICATION

FOR

"CURRENT TO PNEUMATIC CONVERTER"

Prepared / Revised By	Reviewed By	Approved By	Total No. of Pages	Date	Rev. No.
21.12-10					
AK	SSK	AKR	5	21-12-2010	0

CONTENTS

Clause No.	ITEM		Page No.
1.0	Scope of This Document		3
2.0	**Reference Documents and Specifications**		3
	2.1	Scope of Supply	3
3.0	General		3
4.0	P to I converter		3
	4.1	Converter Type	3
	4.2	Material	3
	4.3	Accuracy	3
	4.4	Reading scales	3
	4.5	Enclosure class	3
	4.6	**Hazardous area certifications**	3
Annexure I	Data Sheet Format		4

1.0 SCOPE OF THIS DOCUMENT:

1.1 This functional specification describes the essential design considerations for the selection of Current to Pressure converter for the intended service.

2.0 Reference Documents and Specifications

a) Instrumentation Design Criteria
b) Basic Bid Work
c) Project P & IDs
d) Instrument Process Data Sheets
e)

2.1 **SCOPE OF SUPPLY:**

2.2 The quantity to be supplied and installed shall be as per the requirements indicated in the Basic Bid Work, and the P & IDs.

2.3 The vendor shall be responsible for the selection of the I to P converter suitable for its intended application, its procurement, tagging, packing, testing & calibration, preparation for shipment, along with accessories, spares, and assistance where required for its installation & commissioning at site. This FS shall be read in conjunction with the Instrument Design Criteria.

3.0 Current to Pressure Converter:

~~3.1~~ **General**

A "current to pressure" converter (I/P) converts an analog signal (4 to 20 mA) to a proportional linear pneumatic output (3 to 15 psig). Its purpose is to translate the analog output from a control system into a precise, repeatable pressure value to control pneumatic actuators/operators, pneumatic valves, dampers, vanes, etc.

3.1.1 **The input signal shall be 4-20 mA, 2 wires.**

3.1.1.1 The I/P converter shall be provided with two No. ½"NPT cable entries, with one will be plugged.

3.1.1.2 The output signal shall be 3-15 psi. The output signal shall be linear in relation to input signal.

3.1.1.3 The change in out put due to 10 degree Celsius change in ambient temperature (Max-40^{0}C, Min-16^{0}C) should be very minimum.

3.1.1.4 I/P shall have externally adjustable zero and span.

3.2 **Material:**

3.2.1 Instrument parts shall be resistant to the corrosive properties of the process fluid and ambient conditions to which they are exposed.

3.2.2 **Housing material -Die-cast low copper aluminum alloy body and cover, with an epoxy powder finish.**

3.2.3 Mounting accessories: shall be SS316.

3.3 **Accuracy: better than** ± 0.5% of span.

3.4 **Reading Scales:** Units for I/P converter shall be in PSI.

3.5 **Enclosure Class: The I/P converter shall be weatherproof to NEMA-4X (IP-65) and shall be intrinsically safe.**

3.6 **Hazardous area certifications**: By third party agencies like IEC/UL/ATEX/CMRE/FM/BASEEFA/CENELEC/CSA/PTB for use in hazardous area (Class 1, Division.1, Groups **C** and D, T3).

ANNEXURE-I -TYPICAL DATA SHEET

CURRENT TO PNEUMATIC CONVERTER.

UNITS :- Flow Liquid – M3/HR Gas – NM3/HR Steam – Kg/hr Pressure – kg/cm2 Temperature – deg C Level/length -mm

1	Type		10	Accuracy	
2	Mounting		11	Actuation	
3	Ambient Temperature		12	Housing Type	
4	Electric Supply		13	Accessories	
5	Input		14	Intrinsically safe	
6	Out Put		15	Body material	
7	Pneumatic connection				
8	Area Classification				
9	Conduit Connection				
	Electrical				
	Pneumatic				

NOTE :-

VENDER SEAL AND SIGNATURE

ओएनजीसी ONGC	OFFSHORE ENGINEERING SERVICES	FUNCTIONAL SPECIFICATION FOR FIRE & GAS DETECTION SYSTEM	Spec. No.	3500
			Rev. No.	08
			Discipline	INSTT.
			Page	1 of 41

FUNCTIONAL SPECIFICATION

FOR

FIRE & GAS DETECTION SYSTEM

Prepared / Revised By	Reviewed By	Approved By	Total No. of Pages	Date	Rev. No.
Rakhi Sayena	[signature]	[signature] 12/01/23	41	12.01.2023	8
RS	YD	SA	41	12.01.2023	8
RS	CNN	SRS	34	07.06.2021	7
TKK	ARD	SUS	35	28.05.2014	6
TKK	ARD	AKR	35	28.08.2012	5
TKK	ARD	AKR	35	13.12.2011	4
TKK	ARD	AKR	35	24.02.2010	3
AK	BK	GRP	35	31.09.2006	2
VP	MC	AC	33	23.06.2005	1
VP	MC	AC	33	13.05.2003	0

Table of Contents

1.0 SCOPE OF THIS DOCUMENT 3
2.0 CODES & STANDARDS/ REFERENCE DOCUMENTS & SPECIFICATIONS 3
3.0 SCOPE OF SUPPLY 3
4.0 FIRE & GAS DETECTION SYTEM 4
4.1 GENERAL 4
4.2 SYSTEM REQUIREMENTS 7
4.2.1 DETECTORS AND FIELD DEVICES 8
4.2.1.1 GENERAL 8
4.2.1.2 GAS DETECTORS 8
4.2.1.3 FIRE DETECTORS 13
4.2.1.4 MANUAL ALARM STATIONS/ MANUAL CALL POINTS 16
4.2.1.5 OTHER ASSOCIATED FIELD DEVICES 16
4.2.2 CONTROL DEVICES 18
4.3 FUNCTIONAL REQUIREMENTS 24
4.3.1 CONTROL PHILOSOPHY 24
4.4 SPARES PHILOSOPHY 29
4.5 MATERIAL 29
5.0 EQUIPMENT PROTECTION 29
6.0 INSTALLATION REQUIREMENTS 29
7.0 TESTING & INSPECTION 30
8.0 QUALITY ASSURANCE 32
9.0 DOCUMENTATION 32
10.0 TAGGING & NAMEPLATES 33
11.0 REVIEW & APPROVAL 34
12.0 VENDOR PRE-QUALIFICATION REQUIREMENTS 34
13.0 PREPARATION FOR SHIPMENT 34
14.0 RECEIPT & STORAGE 34
Annexure-I Typical Datasheet for Fire & Gas Detection System 35

1.0 SCOPE OF THIS DOCUMENT

This specification defines the minimum requirements for the design, engineering, fabrication, inspection, testing, supply, installation and commissioning of Fire & Gas Detection System for use on offshore platforms.

1.1 This specification describes Fire & Gas Detection System with field detectors and the functionality of the system as a whole. It does not cover the detailed specifications of:

a) PLC: Functional Specifications of PLC are addressed in document FS-C101.

b) Pneumatic Shutdown Panel: Functional Specifications of Pneumatic Shutdown Panel are addressed in document FS-3501.

c) Electro-Hydraulic Shutdown Panel: Functional Specifications of Electro-Hydraulic System (Well Head Control Panel) are addressed in document FS-3511.

1.2 Any deviations from the requirements of this specification shall be stated in 'Deviation List' in Contractor's proposal. Unless specific deviations are stated, it shall be understood that the Fire & Gas Detection system is in accordance with the specification.

1.3 Contractor's proposal shall also include revision status sheets, which shall show revision status of each page of the proposal/ purchase specification for every submission.

1.4 Any ambiguity in this specification and the reference specifications pertaining to the requirements of Fire & Gas Detection System shall be referred to the Company for clarification prior to finalization of Purchase Specification.

2.0 CODES & STANDARDS/ REFERENCE DOCUMENTS & SPECIFICATIONS

a) Basic Bid Work

b) Instrumentation Design Criteria

c) FS-C101: Functional Specification for PLC

d) FS-3501: Functional Specification for Shutdown Panel

08 e) OISD-163

f) PESO for calibration of cylinders

3.0 SCOPE OF SUPPLY

The Fire and Gas Detection System shall include the following equipment:

08 a) In general, field devices including but not limited to Point type and Open path type Hydrocarbon Gas Detectors, Hydrogen Gas detectors, Toxic Gas (H_2S) Detectors, Triple IR and UV/ IR Flame Detectors, Thermal Detectors, Smoke Detectors, Fire Loop System with Fusible Plugs, ESD & FSD Pull Stations (pneumatic switches or electric switches), Manual Alarm Stations, Manual Call Points, Flashing Beacons,

Audible Alarms, Strobe Lights etc.

b) Accessories including Mounting Units, Canopies etc. to make the system operationally and functionally complete.

c) Interfaces as defined in Scheme-A and Scheme-B.

d) Fire and Gas Mimic Display, Critical Alarms Annunciation.

e) Other items including Portable Purge Calibrators, Calibration Cylinders with trolley, Magnets, Calibration Cup, Commissioning Spares, Special Tools & Tackles etc.

f) 3D F&G Mapping study - The Contractor shall carry out the 3D F&G Mapping study for the gas envelopes and fire for placement of gas and fire detectors. 3D F&G Mapping study shall be based on ISA TR 84.00.07 (latest).

4.0 FIRE & GAS DETECTION SYTEM

4.1 GENERAL

4.1.1 The Fire & Gas Detection system is required to address the risk associated with imminent or established fire and combustible/ toxic gas release.

08 4.1.2 Type approval by FM/ UL/ BASEEFA/ CENELEC/ CSA/ IEC/ PTB/ ATEX/ OISD for use in Class I, Division I, Group C & D and T3 Hazardous Area of all Fire and Gas Detectors (both fixed and portable type), Deluge Valves, ESD & FSD Pull Stations (Electric Switch type) and Loop Charging Panel shall be required.

4.1.3 Unless otherwise specified all contacts shall be volt free contacts which shall be 2 x SPDT or DPDT type, rated 24 VDC – 2 Amps.

4.1.4 The Fire & Gas Detection system scheme shall be one out of the following two schemes (refer 'Basic Bid Work' for type of scheme to be followed for the project)-

a) **Scheme – A :** For Well-Head Platform
b) **Scheme – B :** For Process Platform

4.1.5 **Scheme - A :** Fire & Gas Detection system for Well-Head Platforms shall constitute the following**:**

08 a) Field devices including but not limited to Point type and Open path type Hydrocarbon Gas Detectors, Hydrogen Gas Detectors, Toxic Gas (H_2S) Detectors, Thermal Detectors, Smoke Detectors, Triple IR and UV/ IR Flame Detectors, Fire loop system with Fusible Plugs, ESD & FSD Pull Stations (pneumatic valves or electric switches), Flashing Beacons, Audible Alarms, Strobe Lights etc.

b) Controller/ monitor card mounting unit with relay-logics or F&G PLC (SIL-3) as per basic bid work, which shall be installed in safe area (e.g. Telemetry Interface Cabinet (TIC) Room/ Telemetry Room/ Instrument room).

c) Interfaces to other systems (as defined in the bid) of the platform including Shutdown

Panels (SDP) viz., Pneumatic/ Electro-Hydraulic/ PLC based SDPs, General Purpose Standalone PLC, Process/ ESD PLC and any other shutdown requirements on the platform as in scope of work.

d) Other items including portable purge calibrators, calibration cylinders, magnet, calibration cup, commissioning spares, special tools & tackles etc.

e) For card based F&G system, the controller card and power supply card, both shall be dual redundant.

08 f) For PLC-based (SIL-3) F&G System, Fire & Gas Detectors integral with transmitters shall be provided.

g) <u>Single point Responsibility</u>:

i) In case proprietary controller/ card based F&G System is offered, the OEM of F&G controller/ card shall take Single Point Responsibility for the design, supply, service, spares & maintenance for the complete system.

ii) In case the system is PLC-based (SIL-3), the F&G PLC-Vendor shall take Single Point Responsibility the design, supply, service, spares & maintenance for the complete system.

iii) In case the 'packager' of F&G System is not the OEM of major equipment (i.e. F&G PLC/ F&G Controllers/ F&G detectors), the packager shall have the overall responsibility for *'design, supply, pre-commissioning, commissioning, service, spares and maintenance'* of the complete F&G system.

Packager shall submit authorization letter from the enlisted OEMs of major equipment for carrying out the packaging activity. The OEMs shall be responsible for the design, manufacturing and supply of their products and shall sign & stamp the documents.

4.1.6 **Scheme – B:** Fire & Gas Detection system for Process Platforms shall be implemented as :

08 a) **<u>For enclosed areas</u>** like Building Modules (non-Process enclosed areas), Living Quarters, Control Rooms, Switch Gear Rooms, Stores and Lab rooms etc., Addressable type Smoke and Thermal detectors shall be directly connected to the Addressable Fire & Gas Detection "Logic Solver-PLC" for actions within its closed areas. This addressable PLC shall be further hardwired to SIL-3 F&G PLC for executive actions on the Platform. Vendor shall ensure the compatibility and the connectivity of the addressable F&G detectors to its compatible PLCs as a system, in simple terms and without resorting to intermediate components to interface non-compatible detectors. A dedicated Server grade PC/ Industrial Grade Laptop, fully configured with relevant software shall also be installed with above Addressable PLC based F&G System, for access, monitoring and configuring the Addressable PLC and associated detectors.

08 b) **<u>For open areas</u>**, F&G detectors integral with transmitters (HART) shall be directly

connected to SIL-3 F&G PLC system for Voting logic and Executive actions.

PLC for Scheme - B shall mean SIL-3 PLC irrespective whether it is mentioned as SIL-3 or not. The SIL-3 PLC shall be in the CCR (Central Control Room) and will be the Primary system for the Platform F&G detection and Executive actions.

Addressable and non-addressable detectors shall not be mixed in the open areas. This FS envisages non-addressable detectors for the open areas on the platforms.

08 Single point Responsibility:

i) Wherein F&G PLC (SIL-3) is a part of the Integrated Control System (ICS) of the Process Platform, the ICS Vendor shall take Single Point Responsibility of the complete F&G System including F&G Detectors (both 4-20 mA type and addressable type).

ii) Where the Scope of Work specifies a new F&G PLC for an existing system, Fire and Gas Detector vendor shall follow the FS diligently and shall take Single Point Responsibility for the complete F&G System including F&G Detectors (both 4-20 mA type and addressable type), Logic construction and his chosen 3rd party Logic Solver/ PLC.

In general, LSTK Contractor and the F&G Detector's Vendor shall ensure the compatibility and the connectivity of the F&G detectors to the PLCs, in simple terms without resorting to intermediate components to interface incompatible detectors.

iii) In case the 'packager' of F&G System is not the OEM of major equipment (i.e. F&G PLC/ F&G Controllers/ F&G detectors), the packager shall have the overall responsibility for *'design, supply, pre-commissioning, commissioning, service, spares and maintenance'* of the complete F&G system.

Packager shall submit authorization letter from the enlisted OEMs of major equipment for carrying out the packaging activity. The OEMs shall be responsible for the design, manufacturing and supply of their products and shall sign & stamp the documents.

Scope of supply for a & b above:

a) This scheme comprises of supply of F&G devices from OEMs (as per SVL). Field devices including but not limited to the following: Point type and Open path type Hydrocarbon Gas Detectors, Hydrogen Gas Detectors, Toxic Gas (H_2S) Detectors, Thermal Detectors, Smoke Detectors, Triple IR and UV/IR Flame Detectors, Pneumatic Fire loop system with Fusible plugs, ESD & FSD Pull Stations (pneumatic valves), Manual Alarm Stations, Manual Call Points, Flashing Beacons, Audible Alarms, Strobe Lights etc.

08 b) Field devices shall be connected to F&G PLC (SIL-3) of the Integrated Control System

(ICS) of the process platform. Where the Scope envisages a new F&G PLC in the Tender (in addition to the existing one, or as a separate PLC for integration to ICS), a supply of a suitable and compatible SIL-3 PLC shall be chosen by the Packager/ F&G Detector Vendor.

c) Interfaces to the field as well as Control Room actuating devices including actuation of Clean Agent System, Deluge Valves & FWP Control Panels, Shutdown & Blowdown Valves, Extinguishant release etc.

d) Interfaces to other systems of the platform including DCS, Hardwired Consoles, ESD system, RTU, Package equipment (such as Gas Turbines, Process Gas Compressors) Fire & Gas Detection System, Paging System, Emergency Generator, Pneumatic Shutdown Panels.

e) Fire and Gas Mimic display, Critical alarms annunciations.

f) Calibration equipment (like Portable Purge Calibrators, Calibration Cylinders with trolley, UV Torch, Magnetic Strips, Calibration Cup, Magnet etc.), commissioning spares, special tools & tackles etc.

08 g) Smoke Aspiration System shall be provided for Control Rooms and Switch Gear Rooms and shall be connected to SIL-3 F&G PLC (Refer FS-C101 for details of SIL-3 PLC).

4.2 SYSTEM REQUIREMENTS

The F&G system will be powered from a dedicated 24V DC battery back-up supply, which will provide stable supply, allowing orderly shutdown and monitoring, if power is lost. Power supply sizing shall also consider requirement of installed spares & spare space in F&G system 'Control Devices'. The power for F&G system shall be provided with a dedicated battery backup for continuous un-interrupted operation of the F&G system for a nominal period of minimum 24 hours for Process Platforms and 7 days for Well-Head Platforms powered by Solar/ Wind and 48 hours for Well-Head Platforms powered from Process Platform through Subsea Cable. 08

The F&G system shall have floating ground power supply ('–ve' not earthed). A common power supply fault alarm shall be provided for connection to SCADA/ RTU/ PCS for Scheme - A/ DCS for Scheme - B. Peak load demand shall be considered at the time of load calculation of the F&G System.

The system shall have line monitoring system (EOL resistors, or any proven method of live monitoring) for all the executive action loops/ actuation loops.

All contacts shall be volt free contacts.

In both the Schemes A & B, all Electronic cards (CPU, Controllers, I/O, Power Supply, Communication etc.) and panel-mounted HMIs shall be G3/ GX compliant with conformal protective coating (Harsh environment) requirements as per ANSI/ ISA 71.04, IEC 61086-1 and IEC 60654-4/ equivalent national or international standards. 08

4.2.1 DETECTORS AND FIELD DEVICES

4.2.1.1 GENERAL

4.2.1.1.1 The detectors and field devices shall be suitable for the offshore climate including regular monsoon rains and corrosive marine environment.

4.2.1.1.2 In general, the atmospheric conditions for detectors and field devices shall be as per Instrumentation Design Criteria clause 3.6.4.4.1.

4.2.1.1.3 **Detector Location:** The Contractor shall specify each type of detector and their locations and mountings, to ensure the earliest response to imminent or established fire or hydrocarbon release or toxic gas (H_2S) release, coverage and accumulation, with consideration to the following as a minimum:

a) Requirements of referenced standards, particularly API RP 14C, 14G, ISA 12, ISA 92, NFPA 72 and SGDA (Smoke and Gas Dispersion Analysis).

b) Equipment layouts: Placement of detectors shall not interfere with process equipment maintenance.

c) Ease of Maintenance: The fire and gas detectors shall be installed in a location accessible for calibration and maintenance, preferably from deck or fixed platform, but not in frequently used access ways.

d) Certain areas shall be avoided, such as sample stations where spurious alarms would negate the effectiveness of the detection system.

e) 3D F&G Mapping study for the gas envelopes and fire for placement of gas and fire detectors. 3D F&G Mapping study shall be based on ISA TR 84.00.07 (latest). From the Mapping study, fire & gas zones shall be established and voting logic shall be applicable for every zone.

08 4.2.1.1.4 **Junction Boxes (JB):** Explosion proof junction boxes shall be provided with all type of detectors for cable termination. For details of JBs, refer FS-3507.

4.2.1.2 GAS DETECTORS

4.2.1.2.1 Following general factors shall be considered while selecting gas detectors -

08 a) Combustible Gas (HC & H_2) Detectors shall be able to perform at the Temperature, Humidity, Air Velocity and Vibration specification prescribed in ISA S 12.13.01. Toxic Gas (H_2S) Detectors shall be able to perform to the specifications prescribed in ISA 92.00.01.

b) <u>Temperature Effects</u>: The detectors shall be calibrated at their mean operating temperature. All components, including the sensor, shall be designed for operation within the ambient temperature range for the location of the installation. Where high temperatures are unavoidable, high-temperature rated detectors with remote sensing

heads shall be employed.

c) Effects of Humidity: The detector housing shall be suitable for offshore salt laden marine environment.

d) Air Velocity: Sensors shall be located away from prevailing winds, heating and cooling system. Air circulation patterns and effects of other equipment that affect circulation shall be taken into consideration while finalizing the location of the detectors. Where widely varying wind direction changes are expected, multiple detectors shall be installed to provide the required coverage.

e) Vibration: Sensors shall be located away from vibration prone areas. If this is not possible, the sensors shall be mounted on flexible mounts or flexible conduit.

f) Combustible and toxic gas sensors shall be located in accordance with the protection area limitations of the detector manufacturer.

g) Sensors shall be typically located approximately 1 m from the expected emission point, and preferably in the downwind direction of ignition sources and/ or populated areas.

h) Special consideration shall be given to the properties of the process gas (refer Process Design Criteria for properties of process fluids), specifically its vapor density and predominant component. For lighter than air gases, the detectors shall be placed above the release point. For heavier than air gases, the detectors shall be placed 300-450 mm above the floor.

08 i) For deck extension/ modification, quantity of detectors shall be as specified in the Basic Bid Work.

j) The number of detectors shall be based on the number of potential release sources and accumulation points/ areas.

k) Perimeter detection of releases shall be considered in areas containing large amounts of light hydrocarbons (e.g. process areas or pressure storage areas) to alert operations to initiate a manual response or to actuate an automatic response (e.g. unit shutdown or firewater spray system). These detectors shall be installed along a unit boundary adjacent to an ignition source. Type and distance-range ability of the detector may be considered for selection and optimization of point/ line detectors.

l) Indoor or partially enclosed installations that may require gas detection (such as turbine enclosures, compressor stations, etc.) shall be protected with open path or point detection system.

08 m) Where buildings are equipped with HVAC or pressurizing and ventilation (P&V) Sy stem, Combustible Gas (HC) and Toxic Gas (H_2S) detectors shall be located in the air-intakes to detect the ingress of combustible gas and toxic gas into the air circulation system. Minimum 03 (three) Nos. each of HC and H_2S detectors shall be

installed in each HVAC air intake/ P&V ducts.

n) In high-temperature enclosures, such as enclosures for Gas Turbines, a remote sampling head shall be used, with a standard detector located outside the enclosure and the gas sample aspirated to the detector head.

o) Detectors shall be provided in engine air intakes and enclosure exhaust vents also to detect gas presence.

p) Sampling in indoor locations shall be accomplished by diffusion and convection air currents.

q) No pump or other means of forced air movement shall be required for normal application.

4.2.1.2.2 Fixed HC Detectors

4.2.1.2.2.1 Fixed Hydrocarbon (HC) Gas Detectors shall be based on Infrared Absorption Technology. ***Catalytic HC detectors shall not be used.***

4.2.1.2.2.2 The detecting unit included in the sensor head shall provide adequate sensitivity and stability, under all conditions, with ±5% accuracy (For Range of 0 to 100 % LEL).

4.2.1.2.2.3 Conventional Detectors with HART shall be powered from 24 VDC supply, with a 4 - 20 mA signal loop to cover the calibrated range. Detector faults shall be signaled by below 4 mA signals.

4.2.1.2.2.4 Detector system shall initiate responses at two different concentrations: for warning alarms (high) and for initiation of executive action (high-high).

- 20% and 60% LEL for general process areas
- 15% and 40% LEL for HVAC air intakes
- 5% and 10% LEL for turbine engine air intakes

4.2.1.2.2.5 The alarm condition shall not be resettable until the specific detector reading has dropped below the warning alarm level as applicable (Manual-resettable type).

4.2.1.2.2.6 Operator response shall be required to clear the audible and visual alarms.

4.2.1.2.2.7 HC detectors may be either **Point Detectors** or **Open Path Detectors** or **a combination of both.**

4.2.1.2.2.8 **Point HC Detectors:** Point HC Detectors shall be factory calibrated for 0-100% LEL (Lower Explosive Limit) of Methane in air. A single point detector may be used for more than one release point, with due consideration to the manufacturer's specification of the sensing area.

4.2.1.2.2.9 **Open Path HC Detectors:** Open Path IR detectors shall be located where the beam will

provide a clear view over process equipment. The detectors shall be selected for the correct path length with a separate transmitter and receiver. The installation of transmitter and receiver shall be as per International Codes and Standards. It shall be ensured that the transmitter-receiver distance does not exceed the specified LEL-m range. Combined transmitter and receiver with mirrors shall not be used. Measurement shall not be affected by direct sunlight, fog or mist.

4.2.1.2.2.10 **Combination of Open Path and Point IR Detectors**: If multiple release sources are present in a process unit, then both point and line-of-sight detection may be used.

4.2.1.2.2.11 The HC detectors shall be certified suitable for Class I, Div. I, Group B, C, D, T3 hazardous area.

4.2.1.2.3 Portable HC Detectors

4.2.1.2.3.1 The quantity of Portable HC Gas Detectors required per platform shall be as per the Basic Bid Work.

4.2.1.2.3.2 The portable HC detectors shall be capable of detecting 0-100% LEL of HC and shall have an accuracy of ±5% (For Range of 0 to 100 %LEL).

4.2.1.2.3.3 The portable HC gas detector shall have an integral audio-visual alarm and shall be factory calibrated for 20% and 60% LEL HC. Alarm shall be adjustable over the entire detection range of gas detectors.

08 4.2.1.2.3.4 The portable HC detectors shall be operated by standard/ commercially-available sized rechargeable batteries (AA/ R6 or C/ R14 or D/ R20).

4.2.1.2.3.5 The portable HC detector shall be capable of generating a “Battery Low” Alarm.

4.2.1.2.3.6 The portable HC detectors shall also include accessories such as carrying case, aspirator, calibration adaptor, etc.

4.2.1.2.3.7 The portable HC detectors shall be certified suitable for Class I, Div. I, Group B, C, D, T3 hazardous area.

4.2.1.2.4 Fixed H_2S Detectors

4.2.1.2.4.1 Fixed H_2S Detectors shall be based on Electrochemical cell technology.

4.2.1.2.4.2 Conventional Detectors with HART shall be powered from 24 VDC supply, with a 4-20 mA signal loop to cover the calibrated range. Detector faults shall be signaled by below 4 mA signals.

4.2.1.2.4.3 The H_2S detectors shall be capable of detecting 0-50 ppm of H_2S and shall have an accuracy of ±3 ppm or ±10% of reading, whichever is greater.

4.2.1.2.4.4 The fixed H_2S detectors shall initiate responses at two different concentrations: for warning

alarms and for initiation of executive action.

4.2.1.2.4.5 Nominal system alarm settings shall be 10 ppm for "Alert (High)" Level and 20 ppm for "Danger (High-High)" Level.

4.2.1.2.4.6 The alarm condition shall not be resettable until the specific detector reading has dropped below the warning alarm level as applicable (Manual-resettable type).

4.2.1.2.4.7 Minimum of three H_2S detectors shall be installed at each HVAC air intake of control rooms and normally manned buildings. For Living Quarters and HVAC air intake, H_2S detectors shall have 0 to 20 ppm range with accuracy of ±2 ppm. Nominal system alarm settings shall be 5 ppm for "Alert (High)" Level and 10 ppm for "Danger (High-High)" Level.

4.2.1.2.4.8 Local display and visual alarm indication shall be there on the sensors.

4.2.1.2.4.9 The H_2S detectors shall be certified suitable for Class I, Div. I, Group B, C, D, T3 hazardous area.

4.2.1.2.5 Portable H_2S Detectors

4.2.1.2.5.1 The quantity of Portable H_2S Gas Detectors required per platform shall be as per the Basic Bid Work.

4.2.1.2.5.2 The portable H_2S detectors shall be capable of detecting 0-20 ppm of H_2S and shall have an accuracy of ±3 ppm.

4.2.1.2.5.3 The portable H_2S gas detector shall have an integral audio-visual alarm for activation upon detection of 5 ppm and 10 ppm of H_2S.

4.2.1.2.5.4 The portable H_2S detectors shall be operated by standard/ commercially available sized rechargeable batteries (AA/ R6 or C/ R14 or D/ R20).

4.2.1.2.5.5 The portable H_2S gas detector shall be capable of generating a "Battery Low" Alarm.

4.2.1.2.5.6 The portable H_2S gas detectors shall also include accessories such as carrying case, aspirator, calibration adaptor, etc.

4.2.1.2.5.7 The portable H_2S detectors shall be certified suitable for Class I, Div. I, Group B, C, D, T3 hazardous area.

4.2.1.2.6 Fixed H_2 Detectors

4.2.1.2.6.1 Fixed catalytic H_2 Detectors shall be provided in the battery room and process areas which may have release of H_2 gas. Minimum of three H_2 detectors shall be provided in an area.

4.2.1.2.6.2 Conventional Detectors with HART shall be powered from 24 VDC supply, with a 4-20

mA signal loop to cover the calibrated range. Detector faults shall be signaled by below 4 mA signals. Output inhibit at 3.5 mA may be included as a feature in the system.

Typical set-points values for warning alarms (high) and for initiation of executive action (high-high) are 20% and 60% LEL respectively.

4.2.1.2.6.3 The H_2 detectors shall be capable of detecting 0 – 100% LEL of H_2 and shall have an accuracy of ±5% over the entire detection range.

4.2.1.2.6.4 The catalytic H_2 detectors shall not be located in oxygen enriched or depleted atmospheres.

4.2.1.3 FIRE DETECTORS

4.2.1.3.1 General

The fire detection system shall comprise a variety of fire detection devices and sensors, including:

- Optical Flame Detectors
- Smoke Detectors
- Thermal Detectors
- Fusible Plug Loops
- Manual Alarm Stations

4.2.1.3.2 Optical Flame Detectors

4.2.1.3.2.1 Optical flame detectors shall be the Triple-IR type and shall make use of such sensor, filters and/ or design to reject phenomena such as electric arcs, heaters, artificial light sources, lightning and shall be completely “solar blind”.

4.2.1.3.2.2 The detectors shall be able to detect all types of flaming fires.

4.2.1.3.2.3 Conventional Detectors with HART shall be powered from 24 VDC supply with a 4-20 mA signal loop to cover the calibrated range. Detector faults shall be signaled by below 4 mA signals.

4.2.1.3.2.4 Optical flame detectors shall have automatic, self-diagnostic circuitry that continuously monitors the optical surfaces, sensor sensitivity and electronic circuitry, and shall give fault status. Any detector malfunction shall be alarmed on the Fire and Gas Detection System panel and DCS.

08 4.2.1.3.2.5 For deck extension/ modification job, quantity of detectors shall be as per Basic Bid Work.

4.2.1.3.3 Smoke Detectors

08 4.2.1.3.3.1 Smoke Detectors shall be Photoelectric type and shall be installed indoors in all rooms, above false ceiling and below false flooring, corridors, bathrooms and ducts as applicable.

4.2.1.3.3.2 Smoke Detectors shall be used to provide early response to smoldering or flaming fires in their incipient stages.

08 4.2.1.3.3.3 A detector base shall be provided for connecting the individual detectors to the Fire and Gas (F&G) control system. The detector shall be protected against dust accumulation/ ingress.

4.2.1.3.3.4 The smoke detectors shall incorporate an integral LED indicator for confirmation that the unit is active.

4.2.1.3.3.5 Detectors those are not visible, such as above false ceiling or under false flooring, shall be provided with remote LEDs located in the visible area of room being monitored.

4.2.1.3.3.6 Smoke Detectors shall remain in alarm state until reset by the Fire and Gas control system. It shall be possible to reset all detectors from panel after fault signal has been indicated.

4.2.1.3.3.7 Where buildings are equipped with HVAC or P&V System, Smoke Detectors shall be located in the air-intakes and return air duct to detect the ingress of smoke into the air circulation system. Minimum 03 (three) Nos. smoke detectors shall be installed in each HVAC air intake/ P&V ducts.

4.2.1.3.3.8 In addressable system,

a) Two independent smoke detector loops shall be installed in each area following cross-zone concept.

b) Refer Clause 4.3.1.1.5 for details of voting. Details of cross-zones shall be provided.

c) Disconnection of one or more Smoke Detectors in a loop shall not impair the operation of the remaining Smoke Detectors. Either open or short circuit shall be indicated by a fault alarm in the form of audio-visual warning.

4.2.1.3.4 Thermal Detectors (Rate of Rise & Fixed Heat Detectors)

4.2.1.3.4.1 Thermal detectors shall be used in all indoor spaces including all rooms and equipment enclosures, including concealed floor and ceilings voids.

4.2.1.3.4.2 Rate of rise thermal detectors shall be used where an early warning of smoldering fires is required, such as store rooms and equipment rooms where air flow or high humidity may inhibit the response of smoke detectors.

4.2.1.3.4.3 Fixed temperature or rate compensated type heat detectors shall be used within areas unsuitable for smoke detection where a rapidly achieved high temperature can be expected, such as machinery rooms or equipment enclosures. These shall be set at approximately 12°C above maximum ambient temperature within the area.

4.2.1.3.4.4 Thermal detectors shall remain in alarm state until reset by the fire and gas control system.

4.2.1.3.4.5 All visible detectors shall incorporate an LED indicator as an integral part of the detector head or its mounting base. Concealed thermal detectors shall be provided with an LED "repeater" that is located in a visible location. Normally, unmanned equipment rooms or offices shall have indicators in the corridor. The detector circuitry shall cause the LED to remain illuminated while the detector is in the alarm condition.

08 **4.2.1.3.5 Fusible Plug Loops, FSD and ESD Pull Stations**

4.2.1.3.5.1 Pneumatic Fire loop having Fusible plug shall be provided to initiate alarm in F&G System and initiate opening of deluge valve and FSD system. The Fire loop shall be laid out and segregated according to the fire zones.

4.2.1.3.5.2 Fusible plugs shall be selected to melt at 85°C. Melting point of cooler area fusible plugs shall be as per equipment manufacturer recommendation. Each area covered shall have independent loop.

4.2.1.3.5.3 Pneumatic Fire loops having fusible plug shall also be provided with manually operated FSD pull stations installed at strategic locations all over the platform as per API RP-14C. Pull stations shall be pull-to-activate type and RED in color. PSL shall be provided to sense the signal from each loop and communicate to F&G PLC for necessary mitigation action as per Cause and Effect (C&E) matrix.

08 4.2.1.3.5.4 Each Fire loop having fusible plugs and FSD pull stations shall be charged from a field mounted Pneumatic Master Shutdown Panel/ Pneumatic Charging Panel. Functional specifications of pneumatic panel are addressed in FS-3501.

4.2.1.3.5.5 Fusible plugs/ FSD pull stations shall be divided into independent group for each deck corresponding to each fire water deluge networks. These sub-groups of Fusible plug loops shall be provided with independent loop charging facility.

4.2.1.3.5.6 ESD pull stations shall be installed at strategic locations all over the platform adjacent to each FSD pull stations. ESD Pull stations shall be pull-to-activate type and BLACK in color.

4.2.1.3.5.7 Manually operated ESD pull stations shall be charged from Pneumatic Shutdown Panel/ Pneumatic Charging Panel (Refer FS-3501).

4.2.1.3.5.8 ESD and FSD Pull stations shall also be provided at Pneumatic Shutdown Panel/

Pneumatic Charging Panel.

4.2.1.4 MANUAL ALARM STATIONS/ MANUAL CALL POINTS

08 4.2.1.4.1 Manual Alarm Stations shall be provided for following functions at process platforms:

a) Fire alarm

b) Platform Abandonment

4.2.1.4.2 Manual Alarm Stations for Fire Alarm shall be located throughout all areas of the process platform, especially at exits and in the main equipment rooms. These stations shall be located at easily accessible, well lighted, conspicuous areas and located no more than 30 meters apart.

4.2.1.4.3 Manual Alarm Stations for Platform Abandonment shall be located in Control Room and adjacent to each Survival Craft (exit Point).

4.2.1.4.4 All Manual Alarm Stations shall require double action to activate the alarm.They shall be of break-glass, push-button type.

4.2.1.4.5 Each unit shall be surface mounted at a height of 1.4 meters and shall be provided with a striker connected to the station by a chain.

4.2.1.4.6 Addressable type Manual Alarm Stations shall be provided and connected to the addressable F&G system. It shall be further connected to the main F&G PLC for alarms.

4.2.1.4.7 The Manual Alarm Stations - Fire Alarm shall be RED in color & Manual Alarm Stations - Platform abandonment shall be BLACK in color.

4.2.1.5 OTHER ASSOCIATED FIELD DEVICES

4.2.1.5.1 Flashing Alarm Beacons

4.2.1.5.1.1 The Flashing alarm beacons shall be direct ignition, Xenon type. Flashing alarm beacons shall be powered from 24 VDC supply.

4.2.1.5.1.2 The Flashing alarm beacons shall have flashing speed of 60 flashes per minute.

08 4.2.1.5.1.3 For **Scheme- A,** following shall be considered-

a) Separate flashing alarm beacons of different colors shall be provided for visual indication of 'Confirmed HC-H_2 gas release' and 'Confirmed H_2S gas release'. Additionally, separate flashing alarm beacons shall also be provided for 'Confirmed Fire' at smart platforms.

b) Flashing alarm beacons shall be located at Helideck and Cellar Deck for visibility to personnel approaching the platform via Helicopter or Sea Vessel.

08 4.2.1.5.1.4 For **Scheme – B,** following shall be considered-
Separate flashing alarm beacons shall be provided for visual indication of confirmed Fire detection, HC-H_2 gas release & H_2S gas release. Flashing alarm beacons shall be located at each deck visible from all the areas of the platform. Additionally, these beacons shall also be provided for enclosures buildings (e.g. Enclosure of Gas Turbines etc.).

4.2.1.5.2 Field Sounder

4.2.1.5.2.1 For Scheme- A :

4.2.1.5.2.1.1 Field sounders shall be electronic type and powered by a 24 VDC supply.

08 4.2.1.5.2.1.2 Field sounders shall be provided for audible alarm of 'Confirmed HC-H_2 gas release' and 'Confirmed H_2S gas release'. Additionally, separate sounders shall also be provided for 'Confirmed Fire' at smart platforms.

08 4.2.1.5.2.1.3 Field sounders shall be located at Cellar Deck and Main deck (near shelter room) of the platform.

4.2.1.5.2.1.4 Power Isolation switch for the Field Sounder & Flashing Alarm Beacons and Remote Alarm Acknowledgement facility shall be provided to save Power.

08 **4.2.1.5.2.2 For Scheme - B: Tone Generator**

Sounders having distinct tones for Confirmed Fire, Confirmed Gas (HC/ H_2), Confirmed Toxic Gas (H_2S), ESD, Abandon Platform and All Clear shall be provided with Fire & Gas System. Interfacing between Paging System and F&G System shall also be provided for distinct alarm tone generation during above exigencies.

4.2.1.5.3 Portable Calibration Kit

4.2.1.5.3.1 **For Gas Detectors:**

a) Complete trolley mounted calibration kit including Portable Purge Calibrators/ Calibration Cylinders with all accessories like pressure regulator, rotameter with flow regulator, flexible hose, adaptor cap (to fit on sensing heads) etc., as applicable shall be supplied to enable calibration of the sensors in the field without dismantling them. Portable certified calibration cylinder with calibration attachment including flow regulator/ Pressure regulator/Pressure gauge & Mask for toxic gas LEL-m filter etc.

b) Methane, Hydrogen and Hydrogen Sulphide Calibration gas in Portable gas cylinders shall be supplied. Sufficient quantity of calibration gas shall be supplied to enable complete calibration, testing, inspection of all detector-tags during commissioning and

successive two times complete calibration during post-commissioning period.

08 4.2.1.5.3.2 **For Flame/ Smoke/ Thermal Detectors:**

a) Calibration kit for Smoke Detector, Thermal Detector and Flame Detectors comprising of Aerosol Smoke Bottles/ Non-pressurized Smoke Cartridges, Telescopic Smoke Bottle/ Cartridge Dispenser, Telescopic Rechargeable Battery Powered Heat Tester with Charger, UV/ IR Torch etc. shall be provided.

b) Sufficient quantity of Aerosol Smoke Bottles/ Smoke Cartridges shall be supplied to enable complete calibration, testing, inspection of all detector-tags during commissioning and successive two times complete calibration during post-commissioning period.

4.2.1.5.3.3 In case a project involves supply of detectors at multiple well head and process platforms, above calibration kit shall be supplied for each of the process platforms.

4.2.1.5.4 Extinguishant

4.2.1.5.4.1 Areas protected by extinguishant shall have warning lights and alarms, both on the inside and outside of the enclosure that will be activated prior to and during the release of extinguishant.

4.2.1.5.4.2 Two lights shall be provided apart from a blue flashing strobe. One of the lights shall be used to indicate “Extinguishant release imminent” and the other to indicate “Do Not Enter – Extinguishant Released”.

4.2.1.5.4.3 The release of the extinguishant shall be indicated on the F&G panel and the DCS.

4.2.1.5.4.4 A Manual Release Station and a lockable INHIBIT valve shall be provided at the entrance to the protected area.

4.2.2 CONTROL DEVICES

4.2.2.1 GENERAL

The F&G Control components shall be located in safe area on the platform.

4.2.2.2 FIRE & GAS DETECTION SYSTEM PANEL

4.2.2.2.1 The Fire & Gas detection system panel for Scheme-A shall constitute the following:

a) Controller/ Monitor Cards, Control and other auxiliary components like logic relays, auxiliary relays, power distribution for detectors, flashing alarm beacons, sounders etc. OR,

F&G SIL-3 PLC (as per Basic Bid Work) shall be installed in the SAFE area and housed in TIC Room/ Telemetry Room/ Instrument Room (PLC shall be provided

as per Functional Specification FS-C101).

b) For confirmed HC, H_2 and H_2S gas release, separate SPDT volt free contacts shall be provided for RTU connection.

c) Fire & Gas system panel shall be interfaced with Pneumatic Shutdown panel to conform to SAFE Chart/ C&E matrix requirements.

d) Hooters shall be provided for alarms and trips.

e) The front panel mounted Gas/ Fire detection controllers/ Monitors shall be installed in mating cases or mounting bins recommended and supplied by the manufacturer for panel mounting. All wiring to these controllers shall be terminated on terminal blocks and/ or multi-pin connectors provided as an integral part of the case. Routing calibration adjustments shall be accessible from the front of the panel without having to remove any wiring or causing loss of the instrument function. In addition, total removal of the instrument and replacement with a spare shall be possible from the front of the panel.

f) The modules shall be plug-in type permitting the removal of the modules without disturbing the system wiring. Each module shall have a maximum of 4 channels (one detector per channel) per modules. Gas/ Fire circuit shall be so designed that any channel can be put out of service for repair, without affecting the other.

g) Each module shall have the following:

i. Reset Button to acknowledge/ reset alarm

ii. Test button for Operation Check

iii. Calibration switch, which when put in calibration mode shall inhibit operation of alarm output, enable checks for alarm LED's and reference level and also permit access to meter fine zero, meter span and alarm level contacts.

iv. Automatic malfunction detection in case of open circuit (sensor element and line breaking), over range, short circuit and earth fault.

v. Indicator LEDs for the following: Malfunction warning for each channel, Power on, Calibration mode, Test mode, Low alarm for each channel, High alarm/ trip for each channel.

4.2.2.2.2 The Fire & Gas detection system panel for Scheme- B shall constitute the following:

a) Fire & Gas detection system panel for Scheme-B shall be SIL-3 PLC-based providing independent automatic control. PLC shall be provided as per Functional Specification FS-C101.

b) Fire & Gas detection system panel shall be interfaced with the following systems of the platform and confirm to Safety requirements:

- ESD system
- Pneumatic Shutdown Panel/ Charging Panel

- Central Control Panels for package items (such as Gas Turbines, Process gas compressors etc.)
- Paging system for alarm tones
- Flashing Beacons & Sounders
- Extinguishant systems
- HVAC System
- Deluge panel
- Diesel and electric fire water pumps
- DCS for graphic displays
- Hardwired Console (Part of the DCS operator consoles for monitoring and Control, Provided as part of the DCS System Architecture)

08 c) Besides PLC related cabinets other main components of Fire & Gas Detection system panel shall be:

i) Hard-wired Console Mounted Annunciator Panel Interface

ii) Mimic Display (LED)

iii) Common Facilities. Part of the Hardwired Console at (i) above.

d) Hardwired Console (HWC) Mounted Annunciator Panel: Contractor shall be responsible for the interface between the F&G System and the Hardwired Console provided in the DCS Vendor Architecture. All necessary I/Os required for the interface to the HWC above shall be in the F&G System vendor scope.

In addition to the requirements coming out of the DCS Engineering for the components and facilities for control and monitoring through the HWC, this console shall have the following provisions as a minimum, for consideration by the F&G vendor: Annunciator Panel shall be provided for critical alarms. The annunciation sequence shall be as per ISA-S18.1, 'Annunciator sequences and specifications'. The annunciation lamps shall be capable of removal and replacement from the panel front via individual snap out windows or a swing out hinged door on which all windows are mounted. Minimum critical alarms to be provided are given below:

i) Fire Water Pump (FWP) common alarm

ii) Fire water header Pressure- Low

iii) FSD

iv) ESD

v) FSD loop pressure-low

vi) Manual Alarm Call point- Fire Alarm

vii) Manual Alarm Call point- Platform abandonment

viii) Deluge-Valve open

ix) Area-wise control devices shall include the following:

- Extinguishant Auto-Manual-Inhibit 3-way selector switch
- Extinguishant Manual release Pushbutton
- Reset Pushbutton
- Open Deluge valve push button
- Close Deluge valve push button

x) Common Facilities: This shall include F&G system related Shutdown alarm switches, Annunciator Pushbuttons etc.:

1. Alarm & shutdown Pushbuttons shall include the following:
   - Abandon platform
   - Manual ESD
   - Manual FSD (Separate for 'Cellar' deck and 'Main' deck)
   - FWP: Start
   - FWP: Stop
2. Selector switches shall include the following:
   - Auto/ Test
   - On-Off-Manual (3-way selector switch)
   - Lead/ Lag (FWP selection switch)
3. Annunciator components shall include the following:
   - Pushbutton- Lamp Test
   - Pushbutton- Mute
   - Pushbutton- Accept
   - Pushbutton- Reset
   - Buzzer

   All annunciator components except the alarm horn and auxiliary contact relays shall be mounted integrally in a protective enclosure.

   Mounting clamps which present a flat surface to the front panel face shall be provided for panel mounting the assembly. All connections (i.e. trouble contact, speaker, test, acknowledge and test-pushbuttons) shall be made on screw type terminals. Sufficient spares terminals shall be provided to accommodate all spares/future alarm point in the display. Access shall be provided to allow checking and/ or changing the wiring to these terminal strips.

08 e) Mimic Display: LED Mimic display shall provide graphic status of Fire & Gas Detection system & Fire suppression system area-wise for the entire platform.

Area-wise status indication shall include the following as minimum:

- Single HC (20% LEL for Process area and 15% LEL for HVAC)
- Single HC (60% LEL for Process area and 40% LEL for HVAC)
- Single H_2S (10ppm for Process area and 20ppm for HVAC)
- Single H_2S (5ppm for Process area and 20ppm for HVAC)

- Single H_2 (20% LEL for Process area)
- Single H_2 (60% LEL for Process area)
- Single Flame
- Single Heat
- Single Smoke
- Confirmed HC detection
- Confirmed H_2 detection
- Confirmed H_2S detection
- Confirmed Fire detection

4.2.2.2.3 The Fire & Gas detection system panel shall be free standing, self-supporting cubicle type, fully enclosed construction made of CRCA sheet. The contractor shall be responsible for matching this panel with the other panels of Control room.

4.2.2.2.4 Plates shall be cut on Squaring shear to ensure tight flush joints when bolted together. All sharp edges and corners shall be smoothened off to protect personnel. The final assembly shall be free of buckles, warps, dents or blemishes. Steel strips stock shall be edge welded to the back of the panel from face above and below the cut-outs as required to ensure a rigid, self-supporting structure. In order to reduce the loading on the panel face, channel or equivalent support shall be run horizontally beneath the module cases/ shelves to provide rear support. The finished panel frame work shall be of sufficient strength to allow transportation and lifting by a crane, with all instrumentation installed without causing buckling or deflection. Each panel section shall have four (4) removable lifting lugs at the top of facilitate handling.

4.2.2.2.5 Hinges shall be full-length type. Door frames shall be formed in the enclosure to ensure that the doors fit tightly all around. Doors latches shall be the flush- mounted, 3-point type with recessed chrome-plated handles. An installed clearance will be maintained inside the panels to allow for door opening and access the equipment. Doors shall open outwards of the panel.

4.2.2.2.6 The enclosure and its internal equipment arrangement shall be designed to provide adequate cooling of panel hardware by natural convection alone. Louvers shall be provided on the top of enclosures for air circulation purposes along with exhaust fans, as required.

4.2.2.2.7 All sheet and structural steel shall be vapor degreased after shearing, cutting and forming and prior to welding. Welded construction shall be used throughout, except where specifically noted otherwise. All welds shall be continuous on the pieces being joined. Skip welding is not acceptable.

4.2.2.2.8 Proper precautions shall be taken to prevent material wreckage during the welding process. All welded surfaces shall be thoroughly brushed chipped and ground to provide a clean, smooth surface.

4.2.2.2.9 The entire steel structure is to be sand blasted, phosphatized and painted with two coats of sealing primer on surfaces. The final finish shall be a minimum of three coats of non-

glossy Admiralty Grey epoxy paint on exterior surface and pale cream on interior surface. The fabricator shall supply separately 01 (one) Kilogram of paint for touch up.

4.2.2.2.10 Panel cutout sizes, instrument supports and stabilizers and panel reinforcements shall be strictly in accordance with the instrument manufacturer's recommendations. Cutouts shall not be made with flame production devices.

4.2.2.2.11 Sufficient access shall be provided for all instruments via cable duct/ trays to allow checking and/ or changes to the wiring to the instrument case.

4.2.2.2.12 Auxiliary Equipment: All rear of panel equipment (terminal blocks, auxiliary relays, solid state logic cards, etc.) shall be physically located off the exterior walls of the panel by means of suitable mounting brackets/plates welded to the wall prior to finishing and painting. Drilling and tapping the outside walls of the enclosure for mounting internal equipment is prohibited. The auxiliary equipment shall be located and arranged for easy access, for calibration and maintenance. It shall not be necessary to remove any item in order to gain access to check or remove any other item. All cable runs shall be grouped, routed and secured to provide a neat appearance and prevent interference with the operation and maintenance of auxiliary equipment. Auxiliary relays, if used shall be of the plug-in enclosed type.

08 4.2.2.2.13 Electrical Construction: The installed electrical equipment component parts and associated wiring in the panel shall be in accordance with the practices outlined in NEC (latest edition) for non-hazardous area.

4.2.2.2.14 Cable from field shall enter through bottom. Any cable entering the Control Room/ TIC Room/ Telemetry room/ Instrument room shall be through multi-cable transits.

4.2.2.2.15 Cable glands shall be provided in panel to clamp the incoming/ outgoing cables. Glands shall be of Double Compression type and nickel-plated brass. Gland plates shall be provided to facilitate cable gland installation.

4.2.2.2.16 The main power supply feeder to the F&G System shall be protected by a suitably sized circuit breaker with manual trip lever. The breaker shall be housed in a suitable surface mounted enclosure. Power distribution to controllers and associated group of auxiliary relays circuits shall be via fused terminals with a blown fuse indicator, and input/output fuse status alarm.

4.2.2.2.17 Panel Ground and signal ground shall be separate. Signal ground shall be provided for circuit grounds of Electronic instruments, Detector Circuit shields, drain wire of cable shields, I.S. Barrier earth etc. For this purpose an insulated ground bus bar 25 mm wide x 6 mm thick of copper material shall be provided which shall run along the entire panel length. Ground wiring shall be directly connected to the ground bus bar by means of suitable wire lugs. Intermediate terminals are not allowed. This ground bus bar shall be provided with grounding terminals at both ends. Terminals shall be compression type suitable for AWG-4 copper ground cable. The same shall be provided on each panel structure for panel grounding.

4.2.2.2.18 The panel shall be designed such that field wiring from remote sensing head for Fire & Gas may be terminated directly on the associated detection controller input terminals, rather than interposing field wiring terminal blocks. All gas and fire detection circuits shall be grounded as per recommendations of the manufacturer and good engineering practices. All the detector circuit shields shall be grounded at the same point as the signal circuit.

4.2.2.2.19 Terminals in a terminal block to be identified by their individual numbers located integral with the terminal itself. Wiring at terminals shall be identified by the terminal number and termination service at the other end of the wire. Wiring at Instrument & accessories such as relays, push-buttons etc. shall be identified by item tag No. and terminal service at the other end of wire.

4.2.2.2.20 Suitably sized Terminals shall be provided for terminating main power supply cable. The size shall be decided by the Contractor.

08 4.2.2.2.21 LED lighting shall be installed within the panel to provide adequate lighting for maintenance of equipment. An On/ Off control switch shall be provided for this purpose in a surface mounted enclosure near both the panel doors. The lighting fixtures must not interfere with doors or other equipment, which must be accessible and space shall be provided for LED lamp replacement.

4.2.2.2.22 All major shut down alarms shall be repeated for output to a Remote Telemetry Unit (RTU) in conventional solar powered platforms. For smart well-head platforms, the major shut down alarms shall be communicated via OFC/ available connectivity. These outputs shall be in the form of SPDT volt free contacts and shall be terminated separately in the panel at a convenient central location for further connection.

4.3 FUNCTIONAL REQUIREMENTS

4.3.1 CONTROL PHILOSOPHY

4.3.1.1 General

4.3.1.1.1 The Contractor shall produce a set of Cause and Effect (C&E) diagrams during the design stage reflecting the proposed location/ action for review by the Company. Cause and Effect diagram diagrams shall be as per API RP 14C requirements together with the requirements of this specification.

4.3.1.1.2 All shutdown interlock and alarm circuits shall be designed to operate in a fail-safe mode.

4.3.1.1.3 Fire & Gas logics shall be designed to de-energize to actuate gas/ fire shutdown interlock.

4.3.1.1.4 Alarms-

a) In addition to signaling on the F&G Mimic Display and Alarm Annunciator, Fire & Gas detection shall result in separate and distinct audible and visual alarms at Control room/ equipment enclosure room/ field area (Scheme- B).

b) Visual alarms shall be color coded to the company's requirements to distinguish between fire, combustible gas release, and toxic gas (All Schemes).

c) For gas detection, distinct visual and audible alarms in the Control room shall be provided for the two levels of detection (Scheme- B).

d) Silencing of audible alarms shall not deactivate visual alarms until detection falls below the alarm level.

e) Fire & Gas Detection system shall be suitably interfaced with platform DCS. DCS shall have an over view graphic for each F&G zone. The graphic shall display individual detector analogue value, alarm and fault status and deluge valve and extinguishant release status. A separate graphic will display the fire water pumps run and fault status and fire water pressure (Scheme- B).

4.3.1.1.5 Detector Voting: Confirmed fire or gas-release shall be indicated by the following:

i. 2ooN flame detector ($N \geq 2$)
ii. 1ooN thermal detector ($N \geq 2$)
iii. 2ooN gas detector 60% LEL ($N \geq 3$)
iv. 2ooN smoke detector in Cross Zone ($N \geq 3$)

'N' denotes the quantity of detectors required for covering an area as per the requirements of this specification in general and clauses 4.2.1.1.3, 4.2.1.2 and 4.2.1.3 of this specification in particular. Each area, viz., each process component area, each equipment area, each building module area, shall be covered individually.

Note:

08 1. However, for each of the 'accommodation-rooms' following shall be provided as a minimum-

- 1 No. each of ceiling mounted smoke detector and heat detector.
- 1 No. of ceiling mounted smoke detector in the attached bathroom.
- 2 Nos. of ceiling mounted smoke detectors in the common bathrooms.
- Smoke detectors shall also be installed in space above false ceiling with remote LEDs located in the visible area.

08 2. For Sl. No.1 above, independent voting logic shall be made for 'accommodation-rooms' and 'space above false ceiling' The voting logic depending upon detector location shall be reviewed in F&G Cause & Effect matrix.

3. To detect ingress of Gas into the enclosed facilities like CCR/ LQ/ SWGR room/ Instrument room etc. wherever double door with "airlock" is provided, two nos. each of HC and H_2S detectors shall be provided in each of the 'air lock area' with 2oo2 voting logic.

08 4.3.1.1.6 Distinct audio alarms shall be provided for Confirmed HC-H_2 gas release, Confirmed H_2S gas release, ESD, Confirmed fire, Abandon Platform and All Clear through paging system.

4.3.1.1.7 Fire alarm shall be actuated by any of the following:

i. Activation of Fire Detectors as defined above in 'Detector voting'.
ii. Each FSD loop shall have its own pressure switch, in addition to the main pressure switch for the FSD loop in the loop-charging panel.
iii. Manual activation of Extinguishant from Extinguishant Control cubicles/ stations.
iv. Deluge valve activation push-button.

4.3.1.1.8 All remote gas/ fire alarms outputs shall be provided through.

4.3.1.2 F&G System Control Actions on Wellhead Platforms (for Scheme - A)

4.3.1.2.1 The control actions to be initiated upon fire and/ or gas detection on wellhead-platforms are as follows:

Location	Fire Or Gas Detection	Action (Refer Below)
Process area	Confirmed Fire (Fusible plugs)	1 & 4
Process area	Confirmed Gas release (HC or H_2S detectors)	2 & 3
Battery room	Confirmed Gas release (H_2 detectors)	2
08 RTU Room/ Switchgear Room/ VFD Room/ TIC Room/ Instrument Room	Confirmed Fire (Smoke, Thermal etc.)	1, 4 & 5
08 Transformer Area	Confirmed Fire (Thermal, Triple-IR etc.)	1, 4 & 5

1. Alarm – Flashing (for Smart platforms) and Field Sounders
2. Alarm - Flashing & Field Sounder
3. Initiate ESD
4. Initiate FSD
5. 08 Open Deluge (if applicable as per SOW)

Note : **FSD (Fire Shutdown)** shall close all Shutdown Valves including SSSV and open deluge valves & activate fire water network, if available.

08 **ESD (Emergency Shutdown)** shall close all Shutdown valves and SSVs.

4.3.1.3 F&G System Control Actions Philosophy on Process Platform (for Scheme - B)

4.3.1.3.1 The control actions to be initiated upon fire and/ or gas detection on process-platform are as follows:

Location	Fire or Gas Detection	Action (Refer Below)
Process Area	Confirmed Fire (Flame detectors and Fusible Plugs)	1 & 5
Process Area	Confirmed Gas release (HC detectors or H_2 detectors or H_2S detectors)	1 & 4
Generator Enclosure	Confirmed Fire (Flame detectors or Thermal detectors or Smoke detectors)	1 & 6
Generator Enclosure	Confirmed Gas release (HC detectors or H_2 detectors or H_2S detectors)	1 & 4
Turbo Compressor	Confirmed Fire (Flame detectors or Thermal detectors or Fusible Plugs)	1 & 7
Turbo Compressor	Confirmed Gas release (HC detectors or H_2 detectors or H_2S detectors)	1 & 8
Living Rooms, Galley & Kitchen, Store Rooms (LQ)	Confirmed Fire (Smoke detectors or Thermal- fixed detectors or fusible sprinkler)	1 & 2
Emergency Generator Room	Confirmed Fire (Smoke or Thermal-fixed or Flame detector)	1 & 9
Switchgear Rooms	Confirmed Fire (Smoke or Thermal- Fixed detector)	1 & 6
Battery Room	Confirmed Gas release (H_2 detector)	1 & 3

08

Battery Room (LQ)	Confirmed Fire (Smoke or Thermal - rate of rise detector)	1 & 2
Battery Room (Other Areas)	Confirmed Fire (Smoke or Thermal - rate of rise detector)	1 & 11
Control Room/ TG Control Room/ Labs	Confirmed Fire (Smoke or Thermal - rate of rise detector)	1 & 10
& Process store rooms	Confirmed Fire/ Gas (Smoke or Thermal or HC/ H_2S gas)	1 & 11
08 Switchgear Room/ Control Room/ Instrument Rack Room/ TG Control Room/ Radio Room/ SCADA Room/ RTU Room	Smoke/ Fumes Detected (Smoke Aspiration system)	1

1. Alarm on DCS, Annunciators and Paging system, Indication on Fire & Gas matrix panel.
2. Shutdown Power to Living Quarters, trip ventilation system and automatic actuation of Fire Water spray system/ Extinguishant system.
3. Shutdown Power to the concern area, trip ventilation system.
4. Initiate ESD and trip unit.
5. Initiate FSD and open deluge valve of the detected zone/area.
6. Initiate FSD, trip unit, release extinguishant instantly.
7. Initiate FSD, Trip unit in ventilation mode, trip ventilation system, release extinguishant instantly (GG-PT Enclosure) / open deluge valve (Compressor area).
8. Initiate ESD, Trip unit in ventilation mode and trip ventilation system.
9. Trip unit and ventilation system and release extinguishant instantly.
10. Initiate FSD, trip unit and release extinguishant after some time delay.
11. Shutdown Power to the concern area release extinguishant after some timedelay.

Note: **FSD (Fire Shut Down)** shall close all Shutdown Valves, shall open blow down valves, shall start firewater pumps and open deluge valves/ Release extinguishant.

ESD (Emergency Shut Down) shall close all Shutdown valves, trip the main generator set and start the emergency generator.

4.4 SPARES PHILOSOPHY

This clause shall be read in conjunction with the Instrument Design Criteria (IDC) clause 3.6.4.8 (Instrument Spare Philosophy).

08 4.4.1 Installed spares for PLC shall be as per Functional specification for PLC FS-C101, ‘’.

4.4.2 For installation, testing, commissioning of Fire & Gas detection system vendor shall recommend and provide all the necessary spares. These spares shall be properly & separately packaged with clear marking- ‘CommissioningSpares’.

4.4.3 Vendor shall include along with the proposal a separate priced list of recommended spare parts (with model details, if any) for one year normal operation and maintenance. This list should take into account related factors of ‘Fire & Gas detection system’ reliability, effect of downtime upon normal operation & safety and availability of servicing facilities.

4.5 MATERIAL

4.5.1 The Fire & Gas detectors shall have SS 316 housing material.

4.5.2 For panels refer clause 4.2.2.2 above.

5.0 EQUIPMENT PROTECTION

5.1 The protection requirements for the components of the Fire and Gas Detection System shall in general be as per clause 3.6.4.4 of Instrumentation Design Criteria.

5.2 The fixed gas detectors shall be provided with manufacturer-approved rain hoods. Shop fabricated rain hoods shall not be used.

6.0 INSTALLATION REQUIREMENTS

6.1 The installation requirements for the components of the Fire and Gas Detection System shall in general be according to clause 3.6.4.6 of Instrumentation Design Criteria.

6.2 All detectors shall be installed such that they are easily accessible from a walkway or access platform for calibration and maintenance. Where this is not possible, easily accessible tube connections for detector calibration shall be provided.

6.3 All field equipment shall be readily accessible without the need to move other items or equipment, except ceiling and floor tiles in the case of concealed detectors.

6.4 All components of the fire & gas detection system panel, which require regular

maintenance and/ or monitoring, shall be easily accessible to the operations and maintenance personnel with minimum wiring removal and nospecial tools.

6.5 Maintenance space requirement shall be kept to a minimum without compromising ease of maintenance.

7.0 TESTING & INSPECTION

7.1 Inspection category of Fire & Gas detection system is B. Equipment/ items shall be inspected by company representative only at final stages as per project finalized documents viz. Purchase specification (s), applicable project documents, vendor documents at Vendor's works, in addition to stage inspection by Contractor and/ or Third Party Inspection Agency.

7.2 Calibration, inspection and testing requirements shall in general be as per clause 3.6.4.7 of Instrumentation Design Criteria. However, for specific requirements this specification shall also be followed.

7.3 Prior to shipment from vendor's works vendor shall carry out 100 % testing of hardware and software of Fire & Gas detection system in the presence of Company representative/ Third Party Inspection Agency- representative .

7.4 After finalization of testing procedures, Vendor/ Contractor shall notify to the Company one month before the scheduled date of testing of Fire & Gas detection system.

7.5 Vendor/Contractor shall provide complete documentation and facilities including consumables to allow testing of Fire & Gas detection system.

7.6 The minimum requirements for testing of Fire & Gas detection system shall be:

a) Visual, dimensional, workmanship checks.
b) Internal inspection reports verification.
c) Test certificates, Material test certificates, statutory certificates verification.
d) Verification of components of Fire & Gas detection system (type, size, configuration, ratings, etc.).
e) Wiring check- visual check (type, size, segregation ferruling, etc.), continuity test, and insulation test.
f) Functional check: Gas detectors- Each detector shall be subjected to calibration check. Inject test gas and check analogue readout and alarms as per this spec requirement. Test filters shall be used wherever required.
g) Functional check: Heat detectors- Each detector shall be subjected to calibration check.
h) Functional check: Flame detectors- Each detector shall be subjected to testing and shall be powered for a minimum of 2 hrs before testing.
i) Functional check: Smoke detectors- Apply manufacturer approved test fluid to each detector for testing.

j) Other field devices including flashing beacons, sounder, etc. shall be tested for their functions.

k) Test all shutdowns in accordance with the 'Cause and Effects diagrams'.

l) For 'Loop testing/ acceptance' testing, 'Panel' inspection/ testing, etc. refer to 'Design Criteria- Instrumentation'.

m) Fire & Gas detection system shall be subjected to elaborate 'Factory Acceptance Test' (FAT) at vendor's works. After successful installation system shall under-go 'Site Acceptance Test'. SAT shall be conducted with all connected-systems including interface and, field devices connected live.

n) The Vendor shall demonstrate the design life and overall system availability. Full details of the operating design life of all major components that will be subjected to planned maintenance/ replacement during the life of the package, shall be provided by the Vendor.

7.7 Responsibility of proper installation, site testing, commissioning of Fire & Gas detection system shall be with the contractor. However, Fire & Gas detection system vendor shall provide all the necessary assistance, supervision services etc. for successful installation, site testing, commissioning of the system.

7.8 **Gas Detector Calibration- general considerations**

a) All fixed gas sensors shall have the facility of direct calibration at the sensor head from deck level or from a fixed platform, without the need to open the detector enclosure.

b) A kit shall be provided for detector calibration and testing. Tubing to conduct sample to the sensor head shall be provided.

c) Test filters shall be supplied for calibrating open-path detectors to 1, 3 and 5 LEL-m.

d) Calibration of all detectors shall be possible either from remote location or via hand-held calibration tool, without disconnection of any equipment or cables. On-line calibration of detectors shall be possible. Methane calibration gas shall be supplied in sufficient quantity for calibration of all sensing heads.

e) Gas detectors installed inside HVAC ducts shall be provided with collecting cones and a facility to calibrate the gas detectors externally from the ducts without disturbing the installation.

7.9 **Fire/ Heat/ Flame Detectors**

a) Kits for testing and calibrating the fire detectors shall be provided.

b) All fire sensors shall be capable of direct calibration at the sensor head by one person from deck level or from a fixed platform.

8.0 QUALITY ASSURANCE

8.1 The Contractor shall submit complete QA/QC plans for the proposed Fire & Gas detection system for Company's review.

08 8.2 Detailed test procedures shall be submitted for Company's approval one month before Factory Acceptance Test (FAT) of F&G System.

08 8.3 The Vendor and his Sub-Vendors shall have a well-defined quality system as per the provisions of ISO 9000 (series).

8.4 The Company reserves the right to carry out quality and technical review at both Vendor's and Sub-Vendor's works.

9.0 DOCUMENTATION

9.1 The documentation requirements shall in general be according to clause 3.6.6.2 of Instrumentation Design Criteria.

08 9.2 Specifically for Fire & Gas Detection system following minimum documents shall be submitted:

I. Following documents shall be generated by the Contractor and shall be included in main DCI of the project. These documents shall be provided to the Vendor to aid design & engineering of Fire & Gas detection system:

Sl. No.	Document Name	Category of Document (A/I)
1	F&G detectors, other field devices layouts	A
2	Cause & Effect diagrams	A
3	I/O list and Instrument index	I
4	F & G Cable schedule	I
5	Control room layout- F&G system details	A

Note:

A - For ONGC Approval

I - For ONGC Information

II. Following documents shall be generated by the Vendor. Before submitting the documents for review/ information to the Company, Contractor shall verify & confirm the documents in respect of PS requirements.

1. Document index & schedule

2. Job specification
3. Bill of Material (BOM)
4. Datasheet for Fire & Gas Detection System (Refer Annexure-I below)
5. System configuration/Architecture
6. Logic diagrams
7. Functional Design Specification - Hardware & Software
8. Functional Schematics
9. Loop schematics
10. Specifications & General Arrangement Drawings and Internal Arrangement drawings of Panels/ consoles
11. Operator/ Engineering station details
12. Power distribution plan
13. Grounding plan
14. Power consumption & heat dissipation details
15. PLC nest loading
16. PLC wiring drawings
17. PLC instruction manual
18. Vendor Catalogues, Bought-out item catalogues and Manuals
19. Operation, Installation & Maintenance Manual

III. Following documents shall be sent along with the shipment of Fire & Gas detection system.

1. Packaging list of Fire & Gas components
2. Factory test reports
3. Quality certificates
4. Logic print-outs

9.3 For PLC details, refer Functional Specification FS-C101.

08 9.4 Purchase specification shall cover all the details as indicated in 'Instrumentation Design Criteria'.

10.0 TAGGING & NAMEPLATES

10.1 Tagging & Nameplate requirements shall in general be according to clause 3.6.6.1 of Instrumentation Design Criteria.

10.2 For the purpose of tagging field devices including detectors, manual alarm stations, flashing beacons, sounders, etc. following philosophy shall be used:

AAA – BBB – CCC-DDD

AAA: Platform Name

BBB: Type of Field Device

CCC: Zone No./deck

DDD: Device Tag No. in the zone

11.0 REVIEW & APPROVAL

11.1 Review and approval of purchase specification shall in general be according to Clause 3.6.6.3 of Instrumentation Design Criteria.

11.2 F&G detection system related detail engineering documents categorization shall be as per Clause 9.0 above.

12.0 VENDOR PRE-QUALIFICATION REQUIREMENTS

12.1 The Vendor pre-qualification requirements shall in general be according to Clause 3.6.6.4 of Instrumentation Design Criteria. Also, refer Functional Specification FS - C101.

13.0 PREPARATION FOR SHIPMENT

13.1 The components of the Fire and Gas Detection System shall be prepared for shipment in accordance to Clause 3.6.6.5 of Instrumentation Design Criteria.

14.0 RECEIPT & STORAGE

14.1 Receipt and storage of the components of the Fire and Gas Detection System shall be in accordance to Clause 3.6.6.6 of Instrumentation Design Criteria.

08 Annexure-I : Typical Datasheet for Fire & Gas Detection System

Note-1: This datasheet is generic and Vendor shall fill the details relevant to system(s) in the project.

Note-2: Separate datasheets shall be generated for HC (Portable & Fixed), H_2, H_2S (Portable & Fixed), UV-IR, Triple-IR Detectors, Smoke, Thermal, Duct Mounted Detectors (HC, H_2S, Smoke), Remote LED Indicators, Manual Alarm Call points, Strobe lights/ Flashing Beacons, Sounders & Smoke Aspiration system.

Sl. No.			
A.	**GENERAL SPECIFICATION**		
1	Manufacturer/Make		
2	Model No.		
3	Installation/Location		
4	Functional Requirement		
5	Operating environment		
	Temp	Relative Humidity	
6	Environmental Compliance (G3/GX)		
7	Power Supply		
8	Safety Integrity Level (SIL)		
9	Communication bus (Ethernet/IP network)		
10	Floating Ground (Y/N)		
11	Safety Certifications		
12			
13			
B.	**CONTROLLER/ CARD-BASED F&G SYSTEM**		
1	Manufacturer/Make		
2	Model No.		
3	Type of Controller		
4	Size/Dimension		
5	Weight		
6	Enclosure material		
7	Mounting		
8	Operating temperature		
9	Humidity Range		
10	Ingress protection		
11	Input/ Operating voltage		

12	Power Consumption	
13	Power Supply Redundancy (Y/N)	
14	Controller Redundancy (Y/N)	
15	No. of Channels	
16	Input (Gas/ Fire)	
17	Outputs	
18	Relay	
19	Digital Communication	
20	Event Logging	
21	Display Module (Y/N)	
22	Panel indication (Power Healthy/ Fault/ Alarms etc.)	
23	Certifications/ Approvals	
24		
C.	**PLC DETAILS**	
I.	**Power Supply Module**	
1	Model No.	
2	Redundant/Non-Redundant	
3	Input voltage (Nominal/ Range)	
4	Quantity	
II.	**CPU Module**	
1	Model No.	
2	Memory Size/Capacity	
3	Maximum scan Time	
4	Cycle Time	
5	Backplane Current Consumption	
6	Redundant/Non-Redundant	
7	Memory used	
8	Processor Loading	
9	Processor Idle-time	
10	Memory type (Retentive/Volatile)	
	In case of volatile memory - Details of battery (viz., type, life, if chargeable etc.)	
11	System sizing	
	a) Considering all inputs as closed loops	

	b) Considering all inputs as open loops	
III.	**Analog Input Module**	
1	Model No.	
2	Number of Inputs	
3	Simplex/Duplex	
4	Input voltage Range	
5	Backplane Current Consumption	
6	Quantity	
IV.	**Analog Output Module**	
1	Model No.	
2	Number of Outputs	
3	Simplex/Duplex	
4	Input voltage Range	
5	Backplane Current Consumption	
6	Quantity	
V.	**Digital Input Module**	
1	Model No.	
2	Number of Inputs	
3	Simplex/Duplex	
4	Input voltage Range	
5	Backplane Current Consumption	
6	Quantity	
VI.	**Digital Output Module**	
1	Model No.	
2	Number of Outputs	
3	Simplex/Duplex	
4	Input voltage Range	
5	Backplane Current Consumption	
6	Quantity	
VII.	**Communication Module**	
1	Model No.	
2	Number of Outputs	
3	Redundant/Non-Redundant	
4	Input voltage Range	
5	Backplane Current Consumption	

6	Quantity		
VIII.	**Chassis**		
1	Model No.		
2	Dimension		
3	Mounting method		
IX.	**Slot Filler**		
1	Model No.		
2	Specification		
X.	**HMI/ Engineering Workstation**		
1	Type		
2	Size		
3	Keyboard		
4	Printer		
5	Program Storage		
6	OS Version		
7	Make & Model		
8			
XI.	**Interface-requirement & nature of Interface**		
1	F&G Field Devices (AI/DI/DO)		
2	Well-head SDP		
3	Process Safety PLC		
4	DCS		
5	Workstation		
6	Laptop		
7	Packaged Equipment		
8	SCADA		
9	RTU/TIC		
XII.	Maximum Communication Bus Length		
	a) Standard	b) With bus expander	
XIII.	Max number of sub systems on the communication sub system		
	a) Standard	b) With bus expander	
XIV.	Communication Speed	Communication Loading	
XV.	**Panel/Cabinet Details**		
1	Dimension (WxDxH)		
2	Material		

3	Thickness		
4	Paint color		
5	Front Access	Rear access	
6	Power Supply Modules in Panel for field devices (DC power pack/SMPS etc.)		
7	Quantity		
D.	**FIELD DEVICES**		
I.	**i. Detectors (HC/ H_2/ H_2S) – Portable and Fixed** **ii. UV-IR/ Triple-IR Fire Detectors**		
1	Application		
2	Area Classification		
3	Environment (Operating temp range, Humidity)		
4	Type		
5	Gas (for gas detectors)		
6	Detection Principle		
7	Degree of Protection		
8	Cone of Vision/ Field of View (For flame detectors)		
9	Certification		
10	SIL Rating		
11	Local indication (Y/ N)		
12	Response Time		
13	Detection Range		
14	Accuracy		
15	Fault levels		
16	Power Supply		
17	Power Consumption		
18	Output signal		
19	Cable Entry		
20	Electrical Protection		
21	Sensor	Transmitter	
22	Weight		
23	Material of construction		
24	Mounting Accessories		
25	Calibration & Testing Kit		
26	Make & Model No.		
27	Sensor	Transmitter	

28	Tag Nos. and Quantity	
II.	**Detectors (Smoke/Thermal)**	
1	Application	
2	Area Classification	
3	Environment (Operating temp range, Humidity)	
4	Type	
5	Detection Principle	
6	Degree of Protection	
7	Certification	
8	Integral alarm Indication	
9	Remote alarm Indication	
10	Power Supply	
11	Power Consumption	
12	Output signal	
13	Cable Entry	
14	Electrical Protection	
15	Enclosure Material	
16	Mounting	
17	Weight	
18	Make & Model No.	
19	Tag Nos. and Quantity	
III.	**Flashing Beacon/ Strobe Lights**	
1	Application	
2	Area Classification	
3	Environment	
4	Type	
5	Degree of Protection	
6	Body Color	
7	Lens Color	
8	Flashing Rate	
9	Effective Intensity (cd)	
10	Power Supply	
11	Power Consumption	
12	Output signal	
13	Cable Entry	

14	Material of construction	
15	Mounting	
16	Make & Model No.	
17	Tag Nos. and Quantity	

IO Count (platform-wise)

Notes-

Vendor's Sign and Stamp

2

FUNCTIONAL SPECIFICATION

OF

"INSTRUMENTATION FOR PACKAGED EQUIPMENT"

2

Prepared / Revised By	Reviewed By	Approved By	Total No. of Pages	Date	Rev. No.
Vivek Kumar	Gandi	S. Ravi Shankar			
VK	CNN	SRS	~~22~~ 19	29.07.2021	2
ET	RS	GRP	22	28.03.2007	1
MC	MC	AC	22	13.05.2003	0

CONTENTS

2

Clause No.	Item		Page No.
1.0	Scope of this Document		3
2.0	Codes and Standards		3
	2.1	Reference Specifications	3
3.0	Scope of supply		4
4.0	Instrumentation for Packaged Equipment		4
	4.1	Purpose/Application	4
	4.2	General	4
	4.3	Electrical Requirements	5
	4.4	Unit Control Panels	6
	4.5	Control Requirements	6
	4.6	Selection Basis for Package Instrumentation	7
	4.7	Material Requirements	15
5.0	Equipment Protection		15
6.0	Installation Requirement		16
7.0	Calibration, Inspection and Testing		17
8.0	Documentation		18
9.0	Tagging and Nameplates		19
10.0	Review and Approval		19
11.0	Vendor Prequalification and Requirements		19
12.0	Preparation for Shipment		19
13.0	Receipt and Storage		19

1.0 SCOPE OF THIS DOCUMENT:

2

1.1 This specification describes the essential considerations of approved P&ID, as per complete design of equipment package in consideration, as mentioned in operation, maintenance, safety philosophy, for the design, selection, procurement, testing, installation, calibration and commissioning requirements of instrumentation part of equipment packages as per package equipment list 1.3.

1.2 The Contractor shall be responsible for the selection of various type of instruments for equipment packager suitable for their intended application, their procurement, packing, calibration, testing at yard and offshore, shipment to yard and at offshore site, installation and commissioning at site.

2

1.3 Equipment Packages form Sub vendors:

a) list of the process equipment packages normally expected in offshore platform as per the following list but not limited to:

i. Gas Compression Package
ii. Gas Dehydrator Package
iii. Chlorinator Package
iv. Produced water Conditioner
v. Main Oil Pump
vi. Main Injection Pump
vii. Membrane C02/H2S absorber/separator.
viii. Fuel gas conditioning skid

b) list of the utility equipment packages normally expected in offshore platform as per the following list but not limited to:

i. Gas Turbine Generator
ii. PSA Nitrogen Plant
iii. Membrane Nitrogen Plant
iv. Instrumentation Air Compressors & Dryer package
v. Water Maker
vi. Sewage Treatment Plant.
vii. HVAC
viii. EDG

2.0 CODES & STANDARDS:

2

2.1 Reference Specifications:

a) Specification No. 3.6: Instrumentation Design Criteria
b) Basic Bid Work
c) Project P & IDs
d) Specifications of various equipment package (e.g. Functional Specification for M.I.P., Fine Filter, Fuel Gas Compressor, etc.)
e) Functional Specification for Programmable Logic Controller specification no. MR / OD / INST / FS / C101
f) Applicable Instrumentation Functional Specification.

2

2.2 Clause Deleted.

3.0 SCOPE OF SUPPLY:

2

3.1 The type of instruments to be used with the equipment package and their quantity shall be as per the process requirements indicated in the Basic Bid Work, the P & IDs and the functional specification of the respective equipment package. Where particular instruments, which the vendor informs are the part of the standard equipment skid/package are from vendor not appearing in SVL, it shall comply with standard PTR requirement of ONGC Vendor list criteria. The offered Instrument(s) shall be standard part of package equipment supplied by the vendor with this packaged equipment to various offshore platforms. Package vendor's undertaking to this effect along with relevant documents shall be submitted for verification / review.

2

3.2 For Instrumentation items, the scope of supply shall include commissioning spares, list of two years recommended spares, mandatory spares (with minimum one of each type of instrument as specified in IDC) for all package equipment, as required by clause 3.6.4.8 of Instrumentation Design Criteria.

4.0 INSTRUMENTATION FOR EQUIPMENT PACKAGE:

4.1 Purpose / Application:

2

4.1.1 Instrumentation and associated control system including start-up/shutdown etc. for equipment package shall facilitate complete and independent monitoring and control, safety functions within package as well as interlocks with the main safety system. Same shall be achieved via requisite control system hardware and software, alarms and displays, field/skid instrumentation with connections. Packaged equipment with instrumentation shall be self contained within skid and will communicate with control room/other equipment through the interface signals on the skid panel. Package PLC shall communicate with the DCS/PCS installed in the CCR as per clause 4.4.2 of this FS.

4.2 General:

2

4.2.1 The Instrumentation and Control system for the equipment package shall include all items necessary for the efficient, correct and safe operation of the complete equipment package.

2

4.2.2 This equipment package shall consist of all required instrumentations for smooth operation, maintenance and safety of package equipment. This shall be inbuilt into the standard feature of the equipment package. This shall be over and above as mentioned in Bid P&ID and Scope of Work.

2

4.2.3 The functional requirements of field instruments associated with package equipment shall be as per the relevant functional specification and Instrumentation Design Criteria.

2

4.2.4 Package vendor shall mount/install the instruments, panels etc. which are in his scope. All the cabling, tray work, tubing etc. in this package battery limit shall be completed by the packaged vendor. Interfacing requirements shall be as per the bid requirements/detail engineering carried out with the contractor. Proper spacing for maintenance shall be provided.

2

4.2.5 All wiring and tubing which requires interconnections with any other equipment external to the package shall be terminated in appropriate junction boxes and bulkhead plates, mounted adjacent to the package boundary by the Contractor. The locations and details of all such junction boxes and bulkhead plates shall be agreed to Company prior to installation and clearly marked on the Contractor's drawings.

2 **4.2.6** Process fluids shall not be piped off the unit for measurement purposes. Measurement shall be done within the skid and Measured variables shall only be transmitted off the package by electronic signals.

4.2.7 Cable entries for outgoing cables shall be clearly marked on the layout drawings, including the location, size and quantities, and shall be plugged until cable installation.

2 **4.2.8** Equipment package, which requires pneumatic supply for instruments, shall incorporate a 316SS Supply header of the proper size of the package. The on-package supply piping shall terminate at the package boundary and the location and size of the supply connection shall be noted on the Contractor's drawings. Each pneumatic instrument shall be individually connected to a sub-header and provided with filter regulator and isolation valve. The pneumatic supply for the instrumentation for equipment packages shall in general be as per clause no. 3.6.4.2.1 of Instrumentation Design Criteria.

2 **4.2.9** In large Packages with dedicated UCP, Control and shutdown functions shall be segregated by the provision of separate dedicated instruments, process connections and logic solvers.

4.2.10 Electronic instrumentation transmission signals shall be provided by 2 wire transmitters giving an isolated 4 – 20 mA DC linear output signal from a nominal 24 VDC supply, and shall be compatible with having either pole grounded. All field transmitters shall be microprocessor based; intrinsically safe (IS) "smart" type with HART protocol.

4.3 Electrical Requirements:

2 4.3.1 The electrical power supply for the instrumentation for equipment packages shall in general be as per clause no. 3.6.4.2.2 of Instrumentation Design Criteria.

2 4.3.2 Power supplies and signal voltages shall be as listed below:

- Digital I/O: 24V DC
- Analog Signals: 4-20 mA Smart Signal with HART protocol.
- Power to Control System: 24V DC or 110V AC, 50 Hz single phase earthed neutral supplies from UPS/battery Bank.

Control Panel shall contain the 24V DC power supply source to the electronic instruments as above.

2 4.3.3 Signal interfaces to other systems shall be as follows:

- Process control system – via redundant serial links and analog I/O.
- ESD system – via volt – free contacts, 24 VDC circuit.
- Fire and Gas system – via volt- free contacts, 24 VDC circuit
- Critical Alarms – via. volt-free contacts, 24 VDC circuit.

2 4.3.4 All terminations shall be made on screw clamps/ type terminals/ spring loaded terminals etc. correctly certified (Exe) where necessary. No flying leads shall be permitted within the panel.

2 4.3.5 Each cable core shall be labelled with a full circular O Type ferrule/ sleeves. C' type are not acceptable. Each cable core nomenclature on ferrules shall be corelated with corresponding termination on junction boxes/ panels.

4.4 Unit Control Panels:

2 4.4.1 Where complex equipment packages are supplied with integrated Unit Control Panels (UCP) as a part of the package, such system shall comply with the project specifications.

2 4.4.2 UCPs will communicate with the DCS/PCS via redundant serial data communication links and with the ESD and Fire and Gas systems via hardwired signals. Such UCPs shall be provided with suitable redundant communications ports to allow transmission of monitoring, control and alarm information via serial interface (RS 232 C, RS 422 or RS 485 etc.).
This function shall enable the unit to be monitored and controlled from the Central Control Room (CCR), in addition to the local control and indication

2 4.4.3 **Clause Deleted**.

4.4.4 The Contractor shall ensure robust and secure integration of UCP communications into the DCS using only standard software modules.

2 4.4.5 Shutdown and Safety Instrumented Systems (SIS), which are part of UCPs, shall comply with the integrity requirements arising from the project risk assessment and HAZOP, and IEC –61508.

4.5 Control Requirements:

4.5.1 Operational Requirements:

2 **4.5.1.1** Package equipment (at Field) are normally not manned locally, hence self-sufficient automatic control systems shall be provided in LCP to achieve optimum operation, monitor, control, start-up and shutdown in a safe manner.

4.5.1.2 A Local UCP shall be provided where the grouping of gauges, indicators, controls, alarms, etc. is required for ease of operation or for safety reasons when carrying out manual start-up and shut down procedures.

4.5.2 Shutdown and Auto Start Requirements:

2 **4.5.2.1** The Control systems shall be designed to automatically ensure a safe shutdown condition in the event of any malfunction, or when commanded by the platform ESD system and FSD system.

4.5.2.2 All shutdown signals, to and from a package, shall be cabled to a dedicated junction box at the package limit for interfacing with the Platform ESD system.

4.5.3 Alarm Requirements:

2 **4.5.3.1** In general, alarm signal outputs from equipment package shall be transmitted from the equipment package through potential free contacts. For larger packages, all signals and alarms shall be transmitted to the DCS/PCS by serial link.

2 **4.5.3.2** Where an alarm annunciator is supplied as a part of the equipment package, the annunciator shall have a "first –out" feature to indicate which of a group of alarm points operated first. Wherever specified repeater panel /HMI shall be provided at CCR for centralised monitoring.

2 **4.5.3.3** Annunciation of shutdown and auto-start functions shall be provided by a contact independent of that initiating the control function. In case of soft logic block a hardwired DO shall be configured for the above annunciation of shutdown and auto start functions.

2 **4.5.3.4** Every trip signal, which initiates a shutdown, shall be preceded by alarm signal to warn of an impending shutdown situation.

4.6 Selection Basis for Packaged Instrumentation:

2 **4.6.1 General:**

4.6.1.1 Proven instruments shall be utilized, meeting latest international standards as per the FS. Instruments supplied for package shall have PTR of having been supplied as standard part of package to various offshore platforms.

4.6.1.2 Instrument parts shall be resistant to the corrosive properties of the process fluid to which they are exposed and to the external environment.

4.6.1.3 Seals and purges shall be used as necessary, to ensure reliable instrument performance.

4.6.1.4 Housing and exposed parts of field –mounted instruments shall be resistant to the corrosive environment.

2 4.6.1.5 All instruments of one type shall be procured from the sane manufacturer.

2 4.6.1.6 Technical specifications of all the associated instruments of equipment package shall be in accordance to their respective functional specifications.

4.6.2 Control Panels:

4.6.2.1 All enclosures shall be suitable for the environmental conditions specified in the data sheet for the particular equipment package.

2 **4.6.2.2** Control panels containing PLCs shall be located in non-hazardous areas.
LCP having PLC installed in hazardous area shall have hazardous area certification. Purge panels may be provided with suitable hazardous area certification. LCP for each unit shall be independent from the other one. Common LCP shall be avoided for the one unit.

4.6.2.3 Panels for outdoor use shall be fabricated from 316SS, with minimum sheet thickness of 1.5 mm, Panels shall be suitably reinforced to prevent warping or buckling.

2 **4.6.2.4** Free standing Panels of width 1500 mm shall have a 100 mm channel base. Folding around door opening shall be provided to prevent dust or water lodged on top of the door from entering the panel

when the door is opened. Panels shall have sloped roofs and guttering to direct water away from doors. Although LCP shall be purge/Ex d with weatherproof, IP 65 or better.

4.6.2.5 All hinged parts or doors shall be earthed to a fixed part of the frame connected by a braided strap or fine stranded flexible wire connection.

2

4.6.2.6 Components/Devices in separate compartments shall be capable of being replaced without shutting down units in adjacent compartments and without exposing maintenance personnel to live equipment. Door openings shall be large enough to permit removal of equipment.

4.6.2.7 All control and indicating devices mounted on penetrations shall maintain the IP rating of the panel.

2

4.6.2.8 Provision of minimum of 20% clear spare mounting space (in IO racks, in termination blocks, in relay mounts etc.) shall be kept in the Control Panel to facilitate future addition/expansion in the panel instrumentation.
Spare philosophy for control panel shall be as clause 3.6.4.8.5. c) of IDC.

4.6.3 Flow Measurement:

4.6.3.1 General:

2

4.6.3.1.1 The Contractor shall select the flow meter best suited to the service whilst considering maintenance periods and cost. The Company's preference is to use Coriolis, or magnetic flow meters over turbine and PD meters. Vortex meters may be utilized, provided they are not installed in areas where vibration will affect accuracy.

2

4.6.3.1.2 Flow Meter transmitters shall be "Smart" with 24 V DC power supply and 4-20 mA output and be equipped with a local LCD indicator.

4.6.3.2 Magnetic Flow Meter:

4.6.3.2.1 Magnetic flow meters may be considered where the turn down ratio is less than 1:10 where velocities are <10 m/s and fluid conductivity is >5microsiemens/cm.

4.6.3.3 Coriolis Flow Meter:

4.6.3.3.1 Coriolis meters may be considered where the turn down ratio is less than 1:30. These may be used for the measurement of hydrocarbon liquid flow and / or density with process pressure < 40 Kg. /Cm2. Maximum line size shall be DN 80. Consideration shall be given to the meter pressure drop.

4.6.3.3.2 Where the meter is installed in a bypass line for density measurement, the contractor's design shall ensure that the flow rate through the meter provides the accuracy and response times required by the process.

4.6.3.4 Ultrasonic Flow Meter:

2

4.6.3.4.1 Multi path ultrasonic flow meters may be used for measurement of gases and liquids in accordance with AGA 9 and API 5.8 respectively. The piping design shall ensure that the meter measures a full pipe. The Contractor shall ensure that all wetted parts are compatible with the process conditions. Sensors shall be constructed from 316SS as a minimum.

4.6.3.5 Orifice Plate:

2

4.6.3.5.1 Flow measurement to AGA 3 and AGA 8 for gas and ISO 5167 for liquids shall generally be carried out by different pressure measurement across square edge orifice plates with flange tap orifice flanges or special fittings. Orifice plates shall be concentric for gas flow and eccentric bore for multiphase flow.

4.6.3.5.2 Other types of orifice plates and methods may be considered for approval where necessary to satisfy special applications.

4.6.3.5.3 Meter Rangeability shall not exceed 3 to 1, and the design flow shall preferably be within 0.65 to 0.80 of full range.

4.6.3.6 Flow Nozzles and Venturi Tubes:

4.6.3.6.1 These shall be considered where minimum head loss, and / or high capacity is required and for use in non-homogeneous fluid with a low percentage of solids and shall be in accordance with AGA3.

4.6.3.7 Differential Pressure Flow Transmitter

4.6.3.7.1 Transmitters shall be fitted with 5 way isolation and equalizing manifolds (AISI 316 minimum grade). Mercury type elements shall not be used.

4.6.3.8 Variable Area Flow Meter:

2

4.6.3.8.1 Variable area flow meters shall be used for local indication and transmitting flow parameters of non-hazardous fluids.

4.6.3.8.2 Meters shall be mounted in a vibration free location with pipe work anchored to prevent stressing of the meter body. The meter shall be suitably protected against mechanical damage.

4.6.3.9 Turbine Flow Meter:

4.6.3.9.1 Turbine meters shall be installed directly in the lines with minimum straight run distances calculated according to API – 2534. Appendix C, but not less than 20 pipe diameters upstream and 5 pipe diameters downstream. A strainer shall be installed upstream of each turbine meter.

4.6.4 Level Measurement:

4.6.4.1 General:

4.6.4.1.1 All components associated with level measurement shall conform to the vessel design pressure and temperature, and the project specifications for piping design, materials and fabrication.

2

4.6.4.1.2 Level transmitters and float type level switches shall generally be mounted in external chambers piped to the vessel. To facilitate maintenance testing and calibration, drain points with piped drain valves shall be provided. Chambers shall be provided with vent and drain points.

4.6.4.2 Level Gauges:

2

4.6.4.2.1 For local level indication magnetic type level gauges shall be preferred. Where Gauge glasses type LG are given, it shall be either steel armoured transparent or reflex type. They shall be provided with isolating valves, plugged drains and vent valves of size DN 15 minimum except in certain specified applications.

4.6.4.2.2 Gauge glasses shall be selected on a basis of total visible length giving equal visible coverage above and below the maximum and minimum anticipated operating levels.

4.6.4.2.3 The level gauge shall not exceed 1100 mm visible length.

4.6.4.2.4 Ranges in excess of 1100 mm visible length shall be covered by multiple gauge assemblies. Visible length of multiple gauges shall overlap by a minimum of 50 mm.

4.6.4.3 Level Transmitters:

2

4.6.4.3.1 The primary type of level instrument for remote transmission shall be the displacer type. Unless otherwise specified. However other types of instruments may be proposed for the Company's consideration where displacers are not suitable.

4.6.4.3.2 Differential pressure transmitters are only to be employed when specific gravity changes are considered to be negligible.

2

4.6.4.3.3 Level transmitters shall generally be "SMART" with 24 V DC power supply and 4-20 mA output, and be equipped with a local LCD indicator.

4.6.4.4 Level Switches:

2

4.6.4.4.1 Level switches shall generally be avoided, however where they are required, fixed displacement /displacer type level switches mounted in an external chamber shall be used. Vendor may provide independent Level transmitters in lieu of switches for deriving the required alarm /shutdown signals for the package.

4.6.4.4.2 Variable displacement type switches mounted in an external chamber shall be employed where process requirements or operating conditions prevent the use of float type switches.

4.6.4.4.3 Float switches shall generally have single pole double throw contacts, with contact rating of 5A, 240 V AC. The position of the float shall determine the set point. The switch shall have a fixed differential.

4.6.5 Pressure Measurement:

4.6.5.1 General:

4.6.5.1.1 All pressure instruments shall be specified with a range approximately twice the operating pressure except where process conditions dictate otherwise. They shall be capable of withstanding an over pressure of 25% above the relevant relief valve setting without permanent set or loss of calibration.

4.6.5.1.2 All pressure instruments shall be provided with individual block and bleed valves as well as the primary process isolation valve.

4.6.5.1.3 All instrument used for handling viscous or corrosive materials shall be sealed. Seals may be the chemical type of suitable material and a silicone oil fill between the diaphragm and the pressure element of the instrument. Capillary tubing shall be 316SS,3 mm OD with 316SS spiral wound armor. Diaphragm seals shall be flush out type.

2

4.6.5.1.4 Pressure transmitters shall be 'SMART' with 24 VDC power supply and 4-20 mA output, and be equipped with a local LCD indicator.

4.6.5.1.5 Pneumatic transmitters shall have an accuracy of better than 1% of span and wherever applicable shall be of the indication type. Process connections shall be ½" NPT. Transmitter output tubing shall be provided with a plugged tee for installation of a calibrated pressure gauge.

4.6.5.1.6 Pressure switches shall have single pole double throw contacts, with gold contacts rated for low energy use 1A at 28 VDC. These switches shall have adjustable differential as required.

4.6.5.2 Pressure Gauge:

4.6.5.2.1 Instrument range shall generally be selected so that the normal operating pressure occurs at approximately two-thirds scale.

4.6.5.2.2 Standard ranges shall be used wherever possible. Gauges shall have an accuracy of ±1.0% FSD and have 25% over range protection.

4.6.6 Temperature Measurement:

4.6.6.1 General:

4.6.6.1.1 RTD transducer type Electronic transmitters shall be used for measurement less than 350oC.

4.6.6.1.2 The use of temperature switches shall be generally avoided. Where they must be used they shall be single pole double throw contacts, rated for 1A at 28VDC.

4.6.6.1.3 Liquid or gas filled thermal systems are not preferred. However, if supplied they shall be complete with stainless steel bulb, armored capillary thermowell and union connection. Alternatively the switch may be of bi-metallic type.

4.6.6.1.4 A thermowell shall be employed at all temperature measuring points except in exceptional approved applications.

4.6.6.2 Thermowells:

4.6.6.2.1 Thermowells shall be a minimum of 316 SS, shall be flanged and be DN 40 for piping, DN 50 for vessels. Screwed wells are not acceptable.

4.6.6.2.2 Thermowell extension shall be of sufficient length to ensure sensor head is clear of any pipe or vessel insulation.

4.6.6.2.3 Sufficient clearance shall be provided to ensure the element can be withdrawn from the sensor head without removal of any fittings, etc.

4.6.6.2.4 Test wells shall be equipped with a SS 316 plug. Plugs shall be attached to the well by a SS 316 chain.

4.6.6.3 Temperature Gauge:

4.6.6.3.1 Dial thermometers shall be adjustable, every angle bi-metallic type. Construction shall be of SS 316 with external adjustment and accuracy / better than 1% of full scale.

4.6.6.3.2 The range shall be selected so that the normal operating temperature lies at approximately two-thirds full scale

4.6.6.4 Temperature Transmitter:

4.6.6.4.1 Electronic transmitters shall be used for all temperature measurements that are to be displayed in the Control Room. Platinum RTDs shall be the preferred element. Other sensor types may only be considered when it is demonstrated that an RTD is not suitable. Transmitters shall generally be "Smart" with 24 V DC power supply and 4.20 mA output and LCD indicators.

4.6.7 Control Valves:

4.6.7.1 General:

4.6.7.1.1 Control valves shall normally be located in horizontal lines and with the top work mounted upright. Locations shall permit easy access for maintenance operations to the valve body, actuator and any accessories.

4.6.7.1.2 Body and flange ratings shall be in accordance with the piping design and materials specification. However, the minimum flange rating shall be ASME 300.

4.6.7.1.3 Valve trim shall be SS 316 minimum.

4.6.7.1.4 Control valve shall have tight shut off in accordance with ASME B 16.04 Class IV unless otherwise specified.

4.6.7.1.5 All components shall be designed so that they fail-safe, i.e. in all failures the valve shall move to the safe position.

4.6.7.2 Valve Types:

4.6.7.2.1 Globe valves shall be employed for process control purposes in higher DP, low capacity service.

4.6.7.2.2 Alternative valves as allowed by the piping design and materials specification may be used subject to Company approval.

4.6.7.2.3 Rotary globe valves (eccentric plug) with stellite facings with plug downstream may be considered for flashing service.

4.6.7.3 Valve Body:

4.6.7.3.1 Minimum Control Valve body size shall be DN 25 when the control valve manifold piping is DN25 or larger.

4.6.7.3.2 Valves in flashing service shall have a body size at least one size larger than that necessary to contain the calculated trim size

4.6.7.4 Valve Packing:

4.6.7.4.1 The packing material shall depend upon the service condition. The recommended packing material is PTFE for services from –200 to 200 deg. C. Flexible graphite packing with external lubricator and isolation valve shall be used for service temperatures above 200 deg. C.

4.6.7.5 Control Valve Sizing:

2

4.6.7.5.1 All control valves shall be of globe type valve preferably. Valve flow coefficients shall be calculated for each operating condition in accordance with the equations and methods in ISA 75.01.

4.6.7.5.2 Valve trim size for equal percentage characteristic valves shall normally be selected so that:

Minimum flow valve travel is 20%.

Normal flow valve travel 60% to 80%.

Maximum flow valve travel 90%.

4.6.7.5.3 Valve trim size for linear characteristic valves shall normally be selected to be between 50 to 70% travel for normal flow. Maximum flow shall not exceed 90% of capacity.

2

4.6.7.5.4 Clause Deleted.

4.6.7.5.5 In addition to the selection of valve and trim combination sized to suit the process conditions, full consideration shall also be given to the inlet and outlet velocities and possible occurrence of cavitation causing excessive noise, erosion and vibration. All control valve sizing shall be verified by the valve vendor to ensure suitability to meet the process requirements.

4.6.7.6 Valve Actuators:

4.6.7.6.1 Actuators shall be sized for operation under maximum shutoff pressure drop across the valve, with minimum instrument air pressure or voltage to the actuator as specified in this specification.

4.6.7.6.2 A safety margin of 1.5 for regularly cycling valves shall be applied. For long standstill service safety margin shall be a minimum of 2.

4.6.7.6.3 Each valve set shall be fitted with a 316 SS filter regulator air set combination.

4.6.7.7 Valve Positioners:

4.6.7.7.1 Intelligent valve positioners shall be provided for all modulating control valves.

4.6.7.7.2 Valve positioners shall be "smart type" with integral I/P, direct acting and have a spring range for 4-20 mA signal.

4.6.7.7.3 Positioner by pass shall be fitted except where agreed with the Company.

4.6.7.8 Emergency and Shutdown Valves:

4.6.7.8.1 General:

4.6.7.8.1.1 All shut down /sequence valves shall be of the ball valve type. They shall provide bubble tight shut off (class VI) with the higher pressure from either direction.

4.6.7.8.1.2 All shut down valves shall be fail-safe and shall include a pressure accumulator where necessary to achieve the required action or number of operations on loss of external operating pressure.

4.6.7.8.1.3 All shut down valves shall be provided with a beacon type position indicator. Where specified in the Datasheet, this shall house open and closed position proximity limit switches. These shall be certified as Intrinsically Safe.

4.6.7.8.2 Valve Actuators:

4.6.7.8.2.1 Valve actuators shall be sized to operate the valve in both directions with zero pressure downstream, and maximum pressure upstream and also with the maximum differential pressure in the reverse direction. Sizing shall include a 30% safety margin above the minimum

operating torque requirements of the valve at the maximum DP. Actuator torque shall not exceed the maximum stem shear torque of the valve at the maximum supply pressure.

4.7 Material Requirements:

4.7.1 The material requirements for the equipment package instrumentation shall in general be as per clause no. 3.6.4.5 of Instrumentation Design Criteria and as per the Material Specifications listed in the Equipment/Instrument Specifications and Data Sheets.

2

4.7.2 Clause Deleted.

5.0 Equipment Protection:

5.1 The protection requirements for the equipment package instrumentation shall in general be as per clause no. 3.6.4.4 of Instrumentation Design Criteria.

5.2 Control Room Environment: The control rooms shall be normally pressurized and air conditioned environments and shall provide an environment in accordance with ISA S71.01 and ISA S 71.04. These areas shall be subject to the following condition:

Ambient Air Temperature:	21-24oC
Relative Humidity	:45%to 55%

The equipment in control rooms shall continue to operate properly under conditions of air conditioning failure, when the ambient conditions may rise to 50 o C and 95% RH for periods up to 8 hours.

2

5.3 All field mounted instrumentation mounted in hazardous area Class 1 Division 2, Groups C&D shall be explosion proof to Ex d. Instruments located in Class 1 Division 1 hazardous area shall be intrinsically safe to Ex ia. Certificate shall be provided along with supply.

2

5.4 For reasons of standardization, all field mounted electrical equipment shall utilize the following methods of protection:-

- All electrical instrumentation equipment except junction boxes and solenoid valves shall be certified intrinsically Safe Ex "ia" for Class 1, Div. 1, Group D, Temperature Class T5 minimum.
- Junction boxes to be certified 'increased safety" Ex "e" for IS circuits and explosion proof/Ex"d" for non-IS circuits for Class 1 Div.1 Group D Temperature Class T5 minimum, hazardous area.
- If instrumentation cannot be provided with the above methods of protection, then alternative methods suitable for the classified area and certified by an acceptable Authority shall be proposed for the Company's consideration.
- Solenoid valves which are installed in hazardous area shall be of explosion proof Exd type.

5.5 All certificates and documentation required to satisfy the conditions of the certification shall be provided (including IS system entity and cable parameter calculations) in the Hazardous Area Dossier.

2 **5.6** Equipment shall be designed so that, under normal operating conditions, it shall be unaffected by radio transmissions. The electromagnetic compatibility requirements for the equipment package instrumentation shall in general be as per clause no. 3.6.4.4.6 of Instrumentation Design Criteria.

5.7 All equipment including entries and blanking plugs shall be dust tight and water proof to IP 65/NEMA 4X. Instruments not classified IP 65 to be subject to Company's approval.

5.8 Weather shields shall be installed over Ex 'd' junction boxes, and instruments that do not meet this standard.

6.0 Installation Requirement:

6.1 The installation requirements shall in general be according to clause 3.6.4.6 of Instrumentation Design Criteria.

2 **6.2** Clause Deleted.

2 **6.3** Clause Deleted.

2 **6.4** Clause Deleted.

6.5 Instrument Mounting:

6.5.1 Instruments shall not be mounted on handrails.

6.5.2 Instruments shall be mounted on DN50 pipe stands (except pressure gauges, dial thermometers and other instruments which are screwed directly on the line).

6.5.3 Local instruments shall be mounted so that the centerline of the instrument is approximately 1400 mm above grade or walkway.

6.6 Process and Instrument Connections:

2 **6.6.1** Process and instrument connection shall be in general as per clause 3.6.5 of Instrumentation Design Criteria.

2 **6.6.2** Clause Deleted

6.7 Tubing and Fittings Installation:

2 **6.7.1** Installation and specifications for tubing and fittings of associated instrumentation for packaged equipment shall be as per FS-3507.

2

2

2

2

6.7.2 Clause Deleted.

6.7.3 Clause Deleted.

6.7.4 Clause Deleted.

6.7.5 Clause Deleted.

6.8 Instrument Electrical Installation:

6.8.1 Electrical Installation requirements shall be in accordance with the relevant sections of Electrical Design Criteria.

6.8.2 Cable Segregation:

2

6.8.2.1 Intrinsically safe signal cables, non IS Signal cables and alarm cables shall run on independent cable trays or where they run on same tray, thy must be segregated by a metal barrier as per API 550.

6.8.2.2 Cables carrying miscellaneous signals such as frequency/plus /analysis shall be individually and overall screened and be run on separate tray unless individual approval has been given to share a tray with other signal cables.

7.0 Calibration and Testing:

7.1 Calibration, inspection and testing requirements shall in general be as per clause 3.6.4.7 of Instrumentation Design Criteria.

7.2 All equipment shall be comprehensively tested before delivery. The testing shall demonstrate the full functionality of the equipment.

7.3 In addition to the inspection and testing specified in the accompanying equipment specifications, the Contractor shall also comply with the following minimum requirements.

7.4 The Contractor shall provide to the Company, not less than six weeks prior to the date of commencement of the control and instrumentation system test, a detailed schedule of the tests and sample rest record forms for approval. The tests shall not be undertaken until the test schedule and test forms are approved by the Company.

7.5 The test procedures shall include but not be limited to the following:

- All wiring shall be tested for insulation and the test voltage shall be compatible with the wiring being tested. (Equipment likely to be damaged shall be disconnected for these tests).
- Full stimulated function tests of the complete system with all equipment in position and connected to suitable temporary supplies. The Contractor shall provide the test stimulator consisting of dummy loads with indication of the status

of every output. The test simulator shall only be connected to the field connection terminals and the input/output interface shall be individually labeled to facilitate testing. The Contractor shall obtain Company's approval of supply unit characteristics and simulated input/output interface.

- All equipment failure modes e.g. fail-safe, self-diagnostic, power supply dip, etc. shall be checked.
- Calibration of all instrument items shall be witnessed to ensure the required accuracy is achieved.

7.6 All tests and corrective work shall be recorded for the Company's approval.

7.7 The Contractor shall ensure that all inspections and tests are completed satisfactorily. The Company reserves the right to back-charge any additional inspection work if Contractor's preparations found to be unsatisfactory by the Company.

7.8 Tests shall be witnessed and results recorded on test sheets, which shall include test reports and be forwarded to the Company for approval and acceptance prior to shipment.

8.0 Documentation:

8.1 The documentation requirements shall in general be according to clause 3.6.6.2 of Instrumentation Design Criteria.

8.2 Design Documentation:

2

8.2.1 The design documentation shall include the following:

- General arrangement drawings complete with parts list, materials of construction and description. The drawings shall also include package dimensions, instrument locations, interconnecting piping or tubing tie in points and tubing termination bulkhead location, and junction boxes location at which all instrument cables terminated. The instrument drawing symbols shall be in accordance with ISA S 5.1 Instrument tag No. on those drawings shall conform to tag no. on P&ID drawings.
- A table of all instruments, including pressure gauges, relief valves, control valves, thermometers etc. used throughout the package. This tabulation shall show item number, model number, manufacturer, service, size or range, specification sheet No., set point, sizing sheet, technical catalogue and other data which would facilitate identification and location of the instruments.
- List of recommended commissioning spares.
- List of spare parts for two years operation.
- List of special tools.
- Itemized list of Contractor's Deviations from Specification.
- Weights.

8.3 Final Documentation:

8.3.1 A manufacturing Record Book shall be compiled concurrently with fabrication such that a full record of the fabrication, materials, inspection and testing is available.

8.3.2 All items in the manufacturing Record Book shall be numbered. Contents shall include, but not be limited to the following:

- Front cover sheet detailing.
- Project Title.
- PO No.

9.0 Tagging and Nameplate:

9.1 Tagging & Nameplate requirements shall in general be according to clause 3.6.6.1 of Instrumentation Design Criteria.

10.0 Review and Approval:

10.1 Review and approval of purchase specifications and other related documents shall in general be according to clause 3.6.6.3 of Instrumentation Design Criteria.

11.0 Vendor Pre-Qualification Requirements:

11.1 The Vendor pre-qualification requirements shall in general be according to clause 3.6.6.4 of Instrumentation Design Criteria.

12.0 Preparation For Shipment

12.1 Preparation for shipment shall in general be as per clause 3.6.6.5 of Instrumentation Design Criteria.

13.0 Receipt and Storage:

13.1 Receipt and storage requirements shall in general be as per clause 3.6.6.6 of Instrumentation Design Criteria.

FUNCTIONAL SPECIFICATION

FOR

Instrumentation Bulk materials

Prepared by	Reviewed by	Approved by	Total No. of pages	Date	Rev. No.
			12		
MD	ARD	AS	12	11.12.2017	07
MD	ARD	AS	11	04.07.2017	06
VKS	ARD	AS	11	19.01.2015	05
VKS	ARD	AKR	11	03.05.2013	04
VKS	ARD	AKR	11	09.09.2012	03
VKS	ARD	AKR	11	25.03.2011	02
SRS	SKS	GRP	12	15.05.2011	01
SRS	SKS	GRP	16	14.08.2011	00

TABLE OF CONTENT

Clause No.	ITEM		Page No.
1.0	SCOPE OF THIS DOCUMENT		3
2.0	REFERENCE SPECIFICATIONS		3
3.0	SCOPE OF SUPPLY		3
4.0	BULK ITEM REQUIREMENTS FOR INTERFACING		3
	4.1	Instrument air Headers, Branch lines & Distribution	3
	4.2	Instrument Air Fittings	4
	4.3	Instrument Air Tubing	6
	4.4	Piping /Tubing Support	9
	4.5	Junction Boxes	10

1.0 **SCOPE OF THIS DOCUMENT:**

1.1 This specification describes the essential considerations in the selection, installation, testing and commissioning of the instrumentation Bulk Materials like tubing, fitting, instrument valves (Miniature valves / Instrument Isolation Valves) & Junction Box.

1.2 The Contractor shall be responsible for the selection of the Bulk Materials suitable for its intended application, its procurement, testing, packing, shipment to site, installation and commissioning.

1.3 This Functional specification covers a wide variety of requirements as mentioned in above mentioned clauses. However, contractor is required to submit purchase specifications for Instrumentation Tubing & Fitting for company's review & approval.

2.0 REFERENCE SPECIFICATIONS:

a) Specification No. 3.6: Instrumentation Design Criteria

b) Basic Bid Work

c) Project P & IDs

3.0 SCOPE OF SUPPLY:

3.1 Installation materials for instrumentation items shall be as per actuals. Bidder shall submit detailed hookup drawings for each instrument installation with MOC and Quantities mentioned therein.

4.0 BULK ITEM REQUIREMENTS FOR INTERFACING:

4.1 INSTRUMENT AIR / GAS HEADERS, BRANCH LINES AND DISTRIBUTION.

i. Instrument air/gas header shall be in accordance with the piping specification of appropriate service and operation rating as per the piping PMS.

ii. The size of instrument air/gas mains shall be established in accordance with the table below unless otherwise specified. Connections shall be as per the Annexure IV of the Design Criteria

Nom. Pipe Size	Max. Members of Users
½"	3
¾"	14
1"	23
1½"	50
2"	100

iii. In General, All take-off for branch lines shall be of minimum SS 316 Grade & shall be from the top of the main header with SS 316 block valves (full bore ball valves) equal in size to the branch line. All low points shall have a ½" valve SS 316 (full bore ball valves) installed as a drain and blow down point. However, Note that, wherever any other MOC for tubings and fittings has been specifically mentioned / specified in the FS, all take-off for branch lines, block valves and any other valves shall be of same MOC.

iv. The branches to individual pneumatic instruments shall be as per the Hook-up drawing provided in Annexure IV of Design Criteria.

v. Every pneumatic instrument requiring instrument air / gas shall be provided with a suitably sized filter regulator (SS 316 Grade), fitted with integral relief valve and pressure gauges to ensure that suitable quality and pressure of air is received by the instrument.

vi. Wherever the air / gas sub header ends in a distribution manifold, each manifold take-off valve shall supply only one user and shall be labeled with the user's tag number. At least one spare outlets fitted with instrument valves (full bore ball valves) shall be provided for every 20 meters of the Air / Gas distribution manifold, for future use. The total number of spares for future shall be minimum 20% of the total number of outlets per manifold.

vii. Manufacturer or fabricator or packager supplying equipment or vessels mounted on skids, which incorporate instrumentation requiring pneumatic supply, shall install a pneumatic supply header following the above requirements, of proper size, on the skid with end connection at skid battery limit. All pneumatic instruments mounted on skid shall be fed with pneumatic supply from this header. The non-skid supply piping shall terminate at skid boundary and the location and size of the supply connection shall be noted on vendor approval drawings.

viii. Where the process gas is used instead of instrument air, MOC selected shall be NACE certified material suitable for the process fluid.

4.2 INSTRUMENT FITTINGS:

4.2.1 (A) Material, Specifications & Sizes: (For material except as at 4.2.1 (B) below)

a) All fittings shall be imperial sizes, expressed in nominal outside diameter (OD) and all threads shall be NPT. All threaded fittings shall have NPT threads as per ANSI B1.20.1

b) Fittings shall be of 316 SS material to ASTM A 276 or equivalent (i.e., BS 970-316-S31, DIN4401 or ASME SA 479-316).

c) Stainless Steel Tube Fittings made from bar stock (straight configurations) should meet ASTM A276/ ASME SA479 standards and those made from forgings (including elbows, crosses and tees) should meet ASTM A182/ ASME SA182, BS 970-316-S31, DIN4401 standards.

4.2.1. (B) For Critical loops (i.e. All ESD/FSD Loops, including all fittings in the loop to and from SDP, and the fittings feeding the ESD/FSD loops from the main Air/Gas Header) on Unmanned WHPs.

The Instrumentation fittings shall be 6Mo (UNS31254) or Super Duplex (UNS32750).

The 6Mo (UNS31254) grade Tube Fittings made from bar stock (straight configurations) shall be as per ASTM A276 / ASTM A479 or equivalent standards and those made from forgings (including elbows, crosses and tees) shall be as per ASTM A182 F44 or equivalent standards.

The Super Duplex (UNS32750) grade Tube fittings made from bar stock (straight configurations) shall be as per ASTM A479 or equivalent standards and those made from

forgings (including elbows, crosses and tees) shall be as per ASTM A182 F53 or equivalent standards.

4.2.1 Fittings shall be ASTM F1387 MAF classification – IV," Flare-less Mechanical collating grip type" producing a firm grip on the tube without substantially reducing the tube wall thickness. Fittings shall be capable of holding the maximum working pressure of the tubing without any leak after only one and a quarter turn pull up of the nut.

4.2.2 Fittings shall have the body, front & back ferrules and nuts. All the components of tube fittings shall be from of the same manufacturer.

4.2.3 Nuts for SS fittings shall have silver plated threads to act as a lubricating agent to avoid galling and to reduce tightening torque.

4.2.4 All fittings shall have hardness not exceeding RB 90.All the fittings end connections shall be compatible to tube of hardness in the range between RB 70 to 79 and hardness for fittings (Ferrules) shall be such that, there is a minimum hardness difference of 5 to 10 between tube and fittings for better sealing.

4.2.5 Bar stock shall be with carbon content <0.05% to provide increased resistance to corrosion.

4.2.6 Heat code traceability number shall be stamped or etched on both body and nut of fittings.

4.2.7 Threaded connections shall be NPT for all components and piping and tubing systems for process and utilities connections. PTFE threads sealant shall be used on all threaded connections. For high temperature application suitable sealant shall be selected.

4.2.8 Above API 10000 and above company' approval shall be obtained for selection of Fittings.

4.2.9 **Testing Requirements for tube fittings**.

4.2.10.1 **Type Testing Requirements**:

a. The tests specified in the table below shall be carried out on the samples drawn and in the sequence ,as specified in ASTM F1387-99 (Re-approved 2012).The testing shall consist of all the following tests as per ASTM F1387-99 (Re-approved 2012) for SS316. 7

Mandatory Test		
1	Examination of specimen	Annexure A2
2	Pneumatic Proof Test	Annexure A3
3	Hydrostatic Proof Test	Annexure A4
4	Impulse Test	Annexure A5
5	Flexure Fatigue Test	Annexure A6
6	Tensile Test	Annexure A7
7	Hydrostatic Burst Test	Annexure A8
8	Repeated Assembly Test	Annexure A9
9	Rotary Flex Test	Annexure A10
Supplementary Test		
1	Thermal Cycling Test	Section S2
2	Stress Corrosion Test	Section S4
3	Vibration Test	Section S8
Sizes to be tested: 1/4", 1/2", 3/8", 3/4", 1".		

MOC of tubing used in testing shall be SS316, 6Mo (UNS31254) or Super Duplex (UNS32750) corresponding to the fitting MOC.

Valid 'Type Test' Report either from Accredited Lab / National Test House OR test report for all the tests performed on the samples for all the sizes (as mentioned in the above table) carried out as per ASTM F-1387 (Re-approved 2012) and witnessed by Third Party Inspection (TPI) agency like TUV/DNV/NABL etc. shall be submitted to company for review.

4.2.10.2 Following **Tests shall be witnessed by TPIA for the lot of supply and report shall be submitted, along with supply.**

- Visual Inspection, Dimensional Check, Heat Code Traceability certificate Review, Material Test certificate Review & check for workmanship.
- Positive Material Identification
- Reviews of certificate for Oxalic Etch Testing for inter-granular corrosion resistance (ASTM A 262)
- Hydrostatic Proof Test
- Pneumatic Proof Test

4.3 **INSTRUMENT AIR TUBING**

4.3.1 **Material, Specifications & Sizes** :

- All Tubing shall be imperial sizes, expressed in nominal outside diameter (OD) and all threads shall be NPT ANSIB1.20.1
- Tubing' shall be of TP 316/316L (dual certified) material to ASTM 'A 269' or equivalent (i.e. BS 970-316-S31, DIN4401 or ASME SA 479-316), unless otherwise specified. Molybdenum content shall be 2.5% minimum and carbon content of ≤ 0.03%. The minimum size shall be ¼" OD.
- Manufacturing Process: Extrusion followed by cold Pilgering and / or cold drawing
- Tolerance on OD : +/- 0.08 mm (As Per EN10305-1/DIN 2391)
- Tolerance on wall thickness : +/- 10% (As Per EN10305-1/DIN 2391)
- Pressure Rating: Shall be minimum 250 bars.
- Roughness value on OD: 1.2 Micron RA (max.)
- Concentricity : As per EN 10305(≤ 0.1)
- Tube Hardness : Up to 80 HRB As per NACE MR 0175 Certification
- Tubing Length: 4-6 meters.

4.3.1.1 **For Critical loops (i.e. All ESD/FSD Loops, including all tubing in the loop to and from SDP, and the tubing feeding the ESD/FSD loops from the main Air/Gas Header) on Unmanned WHPs.**

Tubing MOC shall be 6Mo (UNS31254) as per ASTM A 269 / Equivalent Standard or Super Duplex (UNS32750) as per ASTM A 789 / Equivalent Standard.

4.3.2 The manufacturer shall provide material compliance certificates confirming that the raw material for fittings conform to ASME section – II.

4.3.3 Fully Bright Annealed Tubes: Tubes shall be annealed in a controlled reducing atmosphere to ensure a clean oxide-free film on the free surface for reduced chances of corrosion.

4.3.4 Stainless steel tubing shall be soft annealed seamless TP 316 / 316L (dual certified) as per ASTM A269. Sizes shall be as follows:

S. No.	Application	Size
1	High-pressure hydraulic lines	¼"O.D. X 0.035" W.T. 3/8" O.D. X 0.049" W.T.
2	ESD/FSD loop	3/8" O.D. X 0.035" W.T.
3	Pneumatic supply to shutdown valves	3/8" O.D. X 0.035" W.T. 316 SS tube
4	Process impulse lines	1/2" O.D X 0.065" W.T. 316 SS tube
5	For Critical loops (i.e. All ESD/FSD Loops, including all tubing in the loop to and from SDP, and the tubing feeding the ESD/FSD loops from the main Air/Gas Header) on Unmanned WHPs.	For instrument tubing with MOC of 6Mo or super duplex, Thickness sizing calculation shall be submitted to company for approval.

4.3.5 Signal transmission shall be through ¼" O.D. X 0.035" W.T. tubing run singly or in bundles

4.3.6 Monel tubing shall be used on sea water and produced water service and shall be fully annealed seamless as per ASTM B-165 with size ½" O.D. X 0.035" W.T.

4.3.7 Tubing shall be supported and protected by stainless steel angle / channel or ladder / tray along the complete length of each run and shall be fastened with stainless steel saddles at a maximum of 1 m intervals on straight runs.

4.3.8 Channel or tray support for tubing runs shall be sized for a minimum capacity of 30% greater than that required.

4.3.9 All pneumatic exhaust ports and breathers shall be fitted with bug screens, installed facing downwards.

4.3.10 Vendors to confirm that following tests shall be carried out by vendor and certificates for the same shall be given along with supply. Test reports submitted by Vendor shall be reviewed by TPIA at the time of Supply.

- Visual Inspection, Dimensional Check, Check for workmanship. Material Test certificate

- Mechanical test: Tensile test (Yield strength, Tensile strength, % Elongation).
- Hardness Test
- Chemical test (Product analysis)
- Microstructure Examination :Ferrite content, single phase
- IGC test (Austenitic): As per ASTM A 262 specification ,Practice E
- Eddy current test: 100% Eddy Current Test according to ASTM 1016 A / ASTM A450
- Flattening Test
- Heat Number Traceability certificate shall be ensured for above mentioned test and shall be reviewed by the TPIA.

4.3.11 **Tubing Installation:**

a) The primary instrument block valves for all instruments shall be as per piping specifications. MOC of all the drain valves shall be 316 SS / MONEL as a minimum.

b) All impulse lines shall be run with a slope not less than 1 in 12 except where otherwise specified. Direction of slope is to be downward from the process for liquid service and upward from the process for gas service.

c) Tubing shall be joined by double compression fittings.

d) Instrument lines shall be run in the vertical plane as far as possible and shall be run with the Minimum number of changes of directions consistent with good practice and neat appearance. All pipe and tubing shall be run in horizontal and vertical planes only.

e) Tubing shall be bent with correct size tubing bender where required to avoid the use of fittings. Tubing cutter shall always be used to cut tubing. The use of short lengths of tubing in long runs shall be avoided, to avoid the use of fittings.

f) All tubing shall be run in such a manner as to give the maximum protection against mechanical damage. Tubing runs shall be grouped together and clamped where possible. Tubing shall be arranged so that couplings can be tightened without distorting lines. Instrument tubing shall not run on trays intended for cables and shall not share the same transit with cables.

g) Where tubing is run in permanent enclosures, the Contractor shall ensure that entry and exit of such enclosures is clean and smooth.

h) Pipes or tubes installed but not connected, shall have the ends closed in approved fashion to prevent the entry of foreign material by suitable caps or plugs.

i) All reasonable precautions shall be taken to prevent foreign material entering tubing /pipelines before and during erection.

j) No pipe or tube shall be left with mechanical strain on it.

k) Where the length of transmission tubing exceeds 60 Mtrs. (200 Ft.) the Company should be consulted as to the necessary of installing signal booster relays.

l) Where permanent enclosures are left with space for instrument tubing to be pulled in at some future date, a galvanized pull wire of adequate size shall be left in the tray.

m) On tubing to pipe connections and in making of screwed pipe joints, Teflon tape shall be applied to make thread in a manner to insure tape is not over the end of the male fittings.

4.4 PIPING / TUBING SUPPORTS: 7

a) Piping and tubing shall be adequately supported and fixed at distances not exceeding those in the following table:

Single Tubing	Max. Distance Between Supports
$^{3}/_{8}$" O.D. and less	Continuous
½" to ¾" Nom. Size	2 Mtrs. (6 ft.)
¾" to 1" Nom. Size	3 Mtrs. (9ft.)
Multi tube Bundles	3 Mtrs. (9ft.)

- All field-mounted instrument air tubing shall be supported with galvanized steel angles or channels of minimum 1/8" thickness fabricated to present a neat appearance.
- All instrument tubing supports shall be galvanized prior to installation.
- Mechanical ferrule seater shall be used on tubing for pressure 140 kg/cm2 (2000 psi) and above.
- Tubing Clamps shall be made of non-corrosive material, stainless steel AISI 316 or flame retardant plastic. 7
- Galvanic corrosion between tubing and tubing support system shall be avoided. The tubing clamp shall, when installed, not allowed for water / sea water to be accumulated between tubing clamps and tubing, to avoid crevice corrosion. It shall also prevent pitting and cracking corrosion in corrosive environments at offshore installations / platforms.
- Clamps shall be such that it will allow air circulation and reduces moisture retention / trapping. Minimal contact between clamp and tube to be provided to reduces the possibility of contact point corrosion. The tubing support shall limit the effects of impulse and vibration on the tube. The tube support shall provide retaining grooves; maintain tube position and maximum structural integrity. The clamps shall be stronger and provide more secure support for heavy wall tubing in vertical installations

- Valid Certificate conforming to NORSOK Standard Z-CR-010 (Latest edition) shall be certified by Third Party Inspection (TPI) agency like TUV/ DNV/BV/NABL/Lloyds Register etc. shall be submitted for tubing clamps.
- The design of tubing clamps must be considered to ensure safe, trouble-free performance and simplify installation. It shall be easy to inspect without removal. Compatibility, adequate ratings, proper installation, smooth operation and maintenance shall be considered during the selection of the tubing clamp.

b) Pipe bushing shall not be used. Plug shall be of bar-stock with hex heads.

c) If extended lengths of multiple tubing are to be run, multiple bundles and junction boxes with weatherproof entries may be used to the best advantage.

d) Manufacturer or fabricator supplying skid mounted equipments or vessels with instrumentation, which provides, or utilizes pneumatic, offside alarms, shutdowns, or control functions shall tube signals to a central bulkhead, near skid boundary, available for hook up by the Contractor for connection to offside equipment. Location of the bulkhead shall be noted on vendor drawings.

e) Differential or static pressure sensing lines shall not exceed 6 Mtrs. (20 Feet) for direct connected or locally mounted instruments.

4.5 JUNCTION BOXES:

a) Instrument junction boxes shall be certified for use in the hazardous area in which they are installed. For intrinsically safe circuits, boxes certified Increased Safety Ex ‘e’ shall be used. For non-intrinsically safe circuits, boxes certified Explosion Proof / Flame proof Ex‘d’ shall be used. Boxes (Ex ‘e’, Ex‘d’) shall have minimum IP-66 ingress protection.

b) Separate Junction boxes shall be used for intrinsically safe wiring. Junction boxes in any cable path from field to control room shall be limited to one only unless otherwise mentioned in Basic scope of work related to instrumentation. Instrument junction boxes shall not be used for electrical power cables.

c) For Ex‘d’ junction boxes cable entries shall have NPT threads. Where this is not possible, a certified 316 SS adaptor shall be fitted.

d) All Ex‘e’and Ex‘d’ enclosures shall have all spare entries sealed with suitably certified 316 SS plugs.

e) Entries shall be suitably spaced to enable ease of installation of cable glands. Tapped cable entries shall be of good quality, without stripped or damaged threads. The thread shall be continuous and shall permit the cable gland to fit squarely against the gland plate (or enclosure).

f) Where the gland plate is not thick enough for tapping, cable glands shall be fitted with double locknuts.

g) The threads of all cable glands and adaptors shall be greased on assembly.

h) Cable glands fitted to all Ex ‘e’ enclosures, and industrial enclosures, may have a nylon or lead sealing washer between the cable gland and Gland Plate (or enclosures) to ensure IP 66 protection. Sealing washers shall not be fitted to glands entering Ex‘d’ enclosures.

i) All glands, adaptors, reducers and plugs for the Ex 'e' as well as Ex'd' junction boxes shall be certified for use in Class I.

j) All junction boxes shall be effectively sealed, once uncrated or fitted into position. All lids shall be replaced during any break in work. Where this is impractical, e.g. large multi-cable junction boxes, a heavy PVC sheet shall be used to cover the junction box to exclude rain and dust.

k) All terminals (including unused terminals) shall be tightened down. For communing of terminals, feed through cross connection bar shall be used. Comb connectors shall not be used.

Type of Junction Boxes: 7

a) Increased Safety

i. Junction box construction shall be 1.5 mm 316 SS. Boxes shall be bottom entry with a removable 316 SS gland plate. The gland plate shall be drilled and tapped, 6 mm thick for tapered threads and 3 mm thick for parallel threads. The plate shall be bolted to the box with 316 SS bolts, sealed with a neoprene gasket and fitted with an 8 mm earthing stud. All incoming cables shall enter from the sides of the junction box. Outgoing cable shall be from the bottom of the junction box.

ii. Boxes shall have four external mounting lugs, two top and bottom, drilled with 10 mm fixing holes. A full size removable stainless steel gear plate shall be fitted inside each box. Terminals shall be Ex 'e' rail-mounted tunnel-type made of melamine. Wiring ducts shall be colored blue.

iii. Boxes shall have doors hinged minimum at two points with a neoprene seal fitted all round. Hinges shall be the lifted-off pintle type, constructed of stainless steel; Piano hinges are not acceptable. A restraining mechanism shall prevent opening more that 160o.Screwdriver-operated door latches shall be fitted at the top and bottom.

iv. In addition to the manufacturer's "Certification" label, each junction box shall have identification label attached to the box with 316 SS screws in a manner which will not invalidate the hazardous area certification. The label shall be constructed of white-black-white laminated plastic. The label shall include an engraved Tag No. An additional tag stating "Intrinsically Safe Circuits "shall be installed. This shall be blue-white-blue laminated plastic.

v. The contents of Ex 'e' enclosure shall not be altered without the prior approval of the company's electrical or instrumentation engineer.

vi. The damaged terminals shall be replaced with approved Ex 'e' terminals.

b) **Explosion Proof**

i. Explosion proof junction boxes shall be constructed from 316 SS / epoxy coated copper free die- cast Aluminium. Boxes shall have at least four external mounting lugs, drilled with 10 mm fixing holes, and an 8 mm external earth lug. A full size removable stainless steel gear plate shall be fitted inside each box. Cables shall enter from the bottom, and 20% spare entries shall be provided. Cable entries shall be

drilled and tapped to suit the required glands, and fitted with certified 316 SS plugs. Junction box lids shall have cast hinges integral to the box with stainless steel pins.

ii. Each junction box shall have an identification label, in addition the manufacturer's certification label, attached with 316SS screw in a manner, which will not invalidate the hazardous area certification. The label shall be constructed of white-black-white laminated plastic. Terminals shall be rail-mounted tunnel-type, made of melamine.

iii. Ex'd' enclosures shall not be drilled or machined under any circumstances after approval from the company.

iv. Damaged enclosures shall be completely replaced. Flange surfaces shall be clean and undamaged. All fixing bolts shall be present and tightened to the correct torque.

v. All metal flanges and box lids shall be sealed after assembly with a grease-impregnated cloth.

FUNCTIONAL SPECIFICATION

FOR

INSTRUMENTATION CABLES

PREPARED / REVISED BY	REVIEWED BY	APPROVED BY	TOTAL No. OF PAGES	DATE	REV. No.
LGB	CNN	SRS	14	02.07.2021	3
VB	ARD	AKR	14	02.05.2011	2
SRS	SSK	GRP	14	20.05.2008	1
SRS	SSH	GRP	14	28.03.2008	0

TABLE OF CONTENTS

Clause #	DESCRIPTION		Page No.
1.0	SCOPE OF THIS DOCUMENT		3
2.0	CODES & STANDARDS		3
3.0	SCOPE OF SUPPLY		3
4.0	GENERAL REQUIREMENTS		4
5.0	TECHNICAL REQUIREMENTS		4
	5.1	General	4
	5.2	Cable Types	5
	5.3	Conductor	7
	5.4	Conductor Insulation	7
	5.5	Bedding and Inner Sheath	8
	5.6	Braiding and Armoring	8
	5.7	Outer Sheath	8
	5.8	Color Coding	8
	5.9	Bending Radius	9
	5.10	Cable Drums	9
	5.11	Cable lengths and Tolerances	10
	5.12	Cable Glands	10
	5.13	Cable Shrouds	10
6.0	TESTING AND INSPECTION		10
7.0	CERTIFICATION		12
8.0	INSTALLATION REQUIREMENTS		12

1.0 SCOPE OF THIS DOCUMENT:

This Specification defines the minimum requirements for design, manufacture, supply and testing of Instrumentation Cables with cable glands / accessories for installation on the offshore process / well platforms.

2.0 CODES & STANDARDS:

2.1 Reference Specifications:

a) Instrumentation Design Criteria

b) Basic Bid Work

2.2 The Contractor shall ensure that the scope of work is executed with all mandatory and statutory Indian requirements.

All cables, accessories and other components supplied, shall comply with the latest revisions of the applicable codes and standards.

a) B I S [Bureau of Indian Standards]

b) IEC [International Electro technical Commission].

c) NEMA [National Electrical Manufacturers Association].

d) NEC [National Electrical Code]

e) IEEE [Institute of Electrical and Electronics Engineers].

f) API [American Petroleum Institute].

g) Any other recognized International code or standard may be used in lieu of above, subject to approval of company.

3.0 **SCOPE OF SUPPLY:**

3.1 Quantity of the Cables for instrumentation works shall be based on the actual requirements for cable laying, looping, terminations etc., and shall include 'spare' length for exigencies during installation / commissioning.

The Scope for supply of Cables includes the following items:

a) Flame retardant, low smoke, zero halogen, heat and oil resistant low voltage cables. (Instrumentation Cables - Signal, Alarm, Digital, Thermocouple extension, etc., and Power Cables for Instrumentation power requirements)

b) Flame retardant and Fire resistant, low smoke, zero halogen, mica glass tape insulated, heat and oil resistant low voltage cables. (Cables for: F&G systems, ESD systems, Safety related & for Critical Control, Power and Shut Down applications).

c) Cable glands and Cable accessories

d) Termination Accessories / Connectors where specified.

3.2 Vendor shall submit detailed Specifications for Company's approvals, with type of Cables and Quantities mentioned therein.

4.0 GENERAL REQUIREMENTS:

4.1 Safety

a) Non-metallic materials, such as conductor insulations shall be non-hygroscopic, flame retardant and / or fire resistance, self extinguishing and non toxic chaired.

b) Materials that are toxic to the environment or are a potential Carcinogen such as asbestos, poly chlorinated bi-phenyls (PCBs), Mercury etc., shall not be used in the making of the cables.

4.2 Materials, Workmanship and suitability:

a) All materials utilized in the construction of the cables shall be to the latest industrial standard specifications, new and in current production. Should any material prove unsatisfactory, it will be rejected not withstanding any previous satisfactory examination or tests of similar material or of completed cables

b) Where required the Contractor shall provide cable sheath oil resistance performance characteristics.

c) The use of polymeric materials as alternatives to elastomeric materials shall be subject to acceptance by the company. The Contractor's proposal for such alternatives shall be supported by detailed certified evidence of continuous and complete performance in offshore locations.

4.3 Design life:

Cables and cable accessory shall be suitable for operations without periodic maintenance applied throughout the design life of the platform specified elsewhere in the bid package. The overall availability and reliability of the cables and cable accessories shall be demonstrated by the Contractor.

4.4 Units and information:

All quantities and dimensions shall be expressed in metric units. All information, manual, certificates, data and inscriptions shall be in the English language.

5.0 TECHNICAL REQUIREMENTS

5.1 General

5.1.1 The cable shall be new and in good condition and shall be suitable for layering and bunching in ladders, trays and ducts.

5.1.2 All signal, power and control cables on non critical loops shall be flame retardant, low smoke type with sunlight and oil resistant outer sheets, 'zero / low halogen' suitable for installation on offshore oil and gas processing platforms.

5.1.3 Cables on critical service for safety and emergency systems shall be fire resistant type in addition to the specifications at 5.1.2 above.

5.1.4 Conductors shall be stranded and Cables shall be flexible and suitable for easy termination using standard crimps and terminals.

5.1.5 All instrument signal cables shall be continuously shielded with the shield grounded at the same point / bus as the signal circuit, generally at the control instrument (panel) end.

5.1.6 Detailed specifications and testing requirements on "inner and outer conductor insulation and sheathing" material for low halogen / fire resistant / Flame Retardant cables, refer FS 4011 (Electrical – Functional Specifications for Electrical Cables). Fire resistant characteristics of the cables shall be as per IEC 60331 (750ºC for three hours)

5.2 Cable Types:

5.2.1 The cables used shall in general be of the following types:

a) **Fire Resistant Cables:**

Cables of this type shall be used for all circuits / instrument loops that have a safety-related function, or are required to remain operational under emergency conditions. Specification shall be same as that of instrumentation cables as at 5.2.2 (b) below, however with the Primary Insulation being "Fire Resistant" inclusive of the necessary protective fire proofing insulations. In addition these shall be listed by UL/FM or equal in fire service and shall comply with the requirements of IEC 60331 and IEC 60332-3 (Category A) or better. It shall have a fire resistant layer between tinned copper conductor and extruded insulation of MICA glass tape material. This includes cables for all parts of F & G Systems (analog / digital signals), ESD systems, PA Systems, warning beacons and platform status lamps, fire control systems, and power supplies to those systems.

b) **Flame Retardant Cables:**

Cables that are not Fire Resistant shall be Flame Retardant type and shall comply with the requirements of IEC 60332-3 (Category – A). The flame retardant cables to be used for different applications shall in general be as follows:

i) **Signal Cables:**

- Twisted Single Pair / Triad cables shall be 600 V rated and shall have 1.5 sq. mm. PVC covered, 7 stranded Copper conductor, shield with aluminum backed by Mylar tape with the metallic side down helically applied with either side 25% overlap of 100% coverage. Minimum shield thickness shall be .05 mm for single pair and 0.75 mm for triads and multi pair cables.
- 18 AWG, 7 stranded tinned copper drain wire shall be provided and shall be in continuous contact with the aluminum side of the shield. The drain wire resistance including the shield shall not exceed 30 Ohms / Km.
- Cables shall have PVC Inner & Outer jacket and galvanized steel armoring. Jacket shall be light blue in color for intrinsic safe applications and Black for others.
- Ripcord shall be provided for all cables.
- All signal cables (Single or Multi-Pair), shall have individual and overall screen for the conductor pairs / triads, when used for analog 4-20mA and low level signals such as thermocouple signals, pulsed signals or similar signals. All other instrumentation cables (alarm / digital / control) cables shall have overall (collective) screen. For Cored cables there shall be no screen. Drain wire and the

cable conductor screens shall be grounded at one place i.e., at the panel end where the electronics (signal circuit) in the panel is grounded.

- Pairs and triple (triad) type cables shall be uniformly twisted (at least 10 twists per meter) to form pairs/triples and shall not be dissociated by normal handling. Multi-pair / triple cables shall be laid to prevent cross-talk between pairs/triples.
- Instrument signal cable configurations shall in general be: 1 pair, 2 pair, 6 pair, 12 pair, 1 Triad, 6 Triad, 8 Triad etc.
- Multipair cables shall have following additional features:
  - Individual Pair / Triad shall be twisted.
  - Pair / Triad identification by color coding / numbering.
  - Individual pair shielding apart from overall shielding.
  - Single Pair Communication Cable, of 22 AWG 7 strand copper wire with PVC insulation.

ii) **Control / Alarm / Status Cables:**

These shall be same as signal cables except there shall be no individual pair shielding in case of multi-pair cables.

iii) **Extension and Compensating Cables for Thermocouples:**

The cables for thermocouple extension cables shall be of same material as that of thermocouple, which shall be marked as X behind the identification letter for thermocouple as per convention. Compensating cable material shall have same thermo-electric properties as that of thermocouple material. These cables generally shall be same as signal cables except conductor shall be solid 16 AWG in single pair and solid 20 AWG in case of multipair cables. Colour coding, thermoelectric characteristics and limits of errors shall be as per ANSI MC 96.1, BS, EIN, DIN etc.

iv) **Power Cables:**

Power cables shall be 3-core, minimum 2.5 mm^2 copper conductors, 600V 1.0 KV grade, with PVC insulation, galvanized steel armoring. Larger sizes shall be used where required to keep cable voltage drop below 2% of the supply voltage.

c) **Special Cables:**

Cables for special instruments like analyzer, turbine meter, serial interface, Magnetic flow meters, Ultra sonic flow meters, etc. shall be as per manufacturer's recommendation.

d) **Digital Communication Cables**

i) In addition to the technical requirements stated in the previous sections, the following requirements are specific to digital communication cables.

ii) In general, the digital communication cables covered by this specification shall be in accordance with the recommendation of the manufacturers supplying the digital equipment.

iii) Fiber Optic Cable shall be based on ITU-T Rec. 652. Fiber Optic Cable shall be in general fiber multimode 62.5 / 125 micro meter buffered fiber, aramid yarn central strength member and aramid yarn reinforced. Fibre optic cables shall have 50 % spare fibres or 4 spare fibres whichever is greater.

iv) Cables for serial communication shall be foil screened twisted (4 pairs), 100 ohms impedance, 12.5 pF/ft and 24 Ohms/mile, to Beldon 9729 or equivalent.

v) Cabling of Ethernet or fast Ethernet service shall be Category 5e or Category 5 dependant on location and digital equipment.

vi) Both armoured and un-armoured cables shall be required as per requirement.

e) **Optical fiber cables for Sub-Sea applications:** Refer Composite Cable specifications [FS-4020 Subsea Cable] in Electrical Discipline.

5.3 Conductor:

Conductor shall consist of plain, annealed, high conductivity, standard, tinned copper, smoothly drawn, circular in section, free from defect, complying with the requirement of IS:8130 / IEC-60228.

5.4 Conductor Insulation:

5.4.1 The Insulation shall be in general extruded compound of low smoke material complying with the requirements of IEC 60502.

5.4.2 Voltage grades for insulation shall be as follows:-

Nominal System Voltage:	Up-to 240 V
Maximum System Voltage:	264
Voltage Grade:	600 / 1000 V

5.4.3 Properties of Conductor Sheath / Insulation shall meet the following requirements [refer: FS 4011 (Electrical Discipline – Functional Specifications for Electrical Cables)].

a) Temperature Index: Min.250 ºC as per ASTM. D 2863

b) Oxygen Index: Min.30 as per ASTM D 2863

c) Acid Gas Generation: As per IEC 60092-360

d) Smoke Generation: Less than limit for types SW4 Compounds as per IEC 61034

e) Dielectric strength: Min.60% of original dielectric strength tested in accordance with NEMA-WC-5 at 75°± 1°C.

3

f) Flammability: Flame retardant characteristics of electric cable as per IEC-60332 Part 3 Category –A

5.4.4 Cables nominated as Fire resistant shall comply with the following performance characteristic in addition to the above requirements.

- Fire Performance: Fire resistant characteristic of electric cables as per IEC 60331 (750°C for 3 Hrs)

5.5 Bedding and Inner Sheath

5.5.1 The bedding shall be extruded, non-hygroscopic solid filler substantially filled to prevent any ingress of water inside the cable. The material used for the bedding and fillers shall be suitable for the operating temperature of the cable and compatible with the insulating material. The inner sheath shall be effectively filled and shall comply with thickness requirements as IEC 60502. Removal of inner sheath shall not cause adhesion or damage to the conductor insulation. Taped inner sheath shall not be accepted.

5.6 Braiding/Armoring

5.6.1 Multicore cables shall be mechanically protected with hot dipped galvanized steel wire braiding (GSWB) or galvanized steel wire armoring (GSWA) applied over the inner sheath.

5.6.2 Single core low voltage and high voltage cables shall be mechanically protected with tinned phosphor bronze wire braiding (PBWB) or hard drawn aluminum round wire armoring which shall be applied over the inner sheath to confirm to the requirements of international standards.

5.7 Outer Sheath

5.7.1 The outer sheath shall be heat and oil resistant, suitable for installation in an offshore oil and gas processing platform, with uniform thickness and fit tightly over the braiding / armour to ensure no undue residual strain is left in the material.

5.7.2 Outer sheath marking shall be such that details of size of cable (no of cores and conductor cross section), type of insulation, manufacturers name and international standard identification shall be embossed on the outer sheath at regular intervals at maximum of 1 metre.

5.8 Colour Coding

5.8.1 Cable outer sheaths shall be permanently colour coded such that colours do not deteriorate with age or fade with exposure to direct sunlight. Cable shall be UV resistant and coded as per the requirements of IEC 60502.

5.8.2 Cable Colour Coding

1	Low Voltage Power and Control (Equal to or less than 1 KV)	Black
2	Earth	Green / Yellow
3	Instrument Intrinsically Safe (IS)	Light Blue
4	Instrument (Non-IS)	Black

5.8.3 Cable cores shall be coloured as follows:

- 24 V DC Digital Circuits: Positive – White, Negative – Black
- Analogue Circuits: Positive – White, Negative – Black

5.8.4 Individual cores of multi-core power, control, instrument and telecommunications cables, if identified by numbers, shall have both the number and the printed word of the number permanently marked throughout the entire length of the core, at 100 mm interval.

5.9 Bending Radius

5.9.1 Cables shall be suitable for installation with the minimum bending radius, appropriate for the type of cable supplied, which shall comply with the requirements of IEC 60092 – 360. 3

5.9.2 The Contractor shall declare the National standards or the other internationally acceptable standard specification giving minimum bending radius

5.10 Cable Drums

5.10.1 Cables shall be dispatched on suitable barrel diameter, securely battened, with take off ends of the cable brought to the outside of the drum and fully protected against mechanical damage.

5.10.2 The wood used for construction of the cable drum shall be properly seasoned, sound and free from defects. Wood preservatives shall be applied to the entire drum.

5.10.3 The Contractor shall ensure all cable drum lengths supplied shall be continuous as conductor jointing shall not be acceptable. Cables shall be wound on non-returnable cable drums.

5.10.4 Each cable drum shall be fitted with a stainless steel or equivalent label. Equivalent material used for providing the label should be corrosion resistant to saline conditions. The label shall be fixed to the outside of each flange, engraved or permanently marked with the following information:

a) Company's Drum Number

b) Manufacturer's name

c) Cable type number

d) No. of cores and cable cross sectional area in mm and core construction/stranding eg. 3C+E 4mm2, (7/0.85)

e) Voltage grade

f) International Standard(s)

g) Purchase order number/item number

h) Drum length (in meters)

i) Net and gross weights (kg)

j) Weight per meter

k) Date of manufacturer.

5.11 Cable Lengths and Tolerances

5.11.1 Cable drum lengths shall require approval by the Company prior to dispatch from the manufacturer.

5.11.2 A tolerance of 5% shall be permissible for each cable drum supplied, although a maximum tolerance of +3% and zero negative tolerance shall be permissible on the ordered quantity of each cable type.

5.12 Cable Glands

5.12.1 The Contractor shall ensure full tolerance in the dimensional details of the cable outer diameter and diameter under braiding / armouring (where applicable) is provided by the manufacturer.

5.12.2 The Contractor shall ensure the cable glands to suit cable sizes are supplied by the manufacturer. All cable glands (NPT) shall be double compression type dual certified Exd and deluge protected unless otherwise approved by the Company.

5.12.3 All cable glands and adaptors will be made of nickel-plated brass/SS and will be fitted with soft sealing nylon washers or integral nitrile washers. Fiber washers will not be used. Locknuts will be used for entry into sheet steel boxes and enclosures.

5.12.4 Industrial cable glands (ET type) may be used with non-certified equipment in indoor, non-hazardous locations.

5.13 Cable Shrouds

Material for heat shrink Cable shrouds shall be cross linked polyolefin**.**

6.0 TESTING AND INSPECTION

6.1 General

6.1.1 The cable shall be tested and inspected at the manufacturer's works, or at a recognized testing facility. The Contractor shall ensure all the test equipment necessary to test the cables is provided by the manufacturer. Test certificates for all tests shall be provided to the Company, immediately on completion of tests performed. All tests shall be witnessed by the Company or its authorized representative.

6.1.2 The Contractor shall ensure detailed records and log sheets regarding the results of the tests and certification that the items supplied will meet specified performance requirements, are supplied.

6.2 Inspection

6.2.1 The Contractor shall ensure all material employed shall be available prior to and after the manufacture of cables, for inspection by the Company. The Contractor shall furnish all necessary information concerning the supply to the Company's inspector or representative. The inspector shall have free access to the manufacturer's works for the purpose of

inspecting the process of manufacture in all the stages and will have the authority to reject any material which appears to be unsuitable or of unsatisfactory quality.

6.2.2 In addition, the minimum inspection requirements, prior to shipment of cable shall be the following:

a) Verify cable lengths

b) Verify sheath colour

c) Verify gland fit

d) Verify core configuration

e) Verify core colours

f) Check continuity of each core (and screen/drain wires where applicable) on each drum (to match manufacturer's data sheet for DC resistance)

g) Check insulation resistance between cores and armour, where applicable (test at twice working voltage, not less than 10 M Ohm)

h) Verify drum markings

6.3 Factory Acceptance Testing

6.3.1 Electrical and instrument cables shall be tested in compliance with the standards to which they are manufactured with all optional tests included.

6.3.2 Company shall be advised at least (4) weeks in advance of the scheduled date of each test and again 20 days prior to the actual test.

6.3.3 Tests shall include but are not limited to the following:

a) Cables shall be tested in accordance with IEC 60092-360 tests to include electrical resistance of conductors. 3

b) Verification of design limitations; cable for use in IS circuits shall have their parameters measured to ensure that these comply with the relevant standards namely L/R micro F / Km & mH /Km.

c) Instrument cables shall be tested to verify the following:

i. The maximum inductance to resistance ratio (L/R) between insulated conductors of any one pair of screened cables shall not be greater than 26 micro-henries per ohm.

ii. The mutual capacitance of screened cable at a frequency of 1 KHz shall not be greater than 100 pF per meter.

iii. The pair to pair capacitive unbalance values at a frequency of 1 KHz for unscreened pairs shall not be greater than 250 pF per meter.

iv. Spark test: a spark test shall be carried out on all instrument cables. All cores shall be tested at 6 KV rms.

v. Coaxial cables shall be tested for frequency response, attenuation and insertion loss.

vi. Type tests shall be carried out in compliance with IEC 60331 and IEC 60332 (Part 3) when specified.

vii. Type test certificates may be acceptable, subject to acceptance by the company, in lieu of the tests.

6.4 Sealing

6.4.1 Immediately after electrical tests, the ends of the cable shall be sealed with heat shrink caps to prevent the ingress of moisture.

7.0 CERTIFICATION

7.1 All cables and cable accessories of similar design and construction features manufactured by the same Vendor:

a) Shall have been type tested by an authority approved by the Company.

b) Shall have been in continuous satisfactory service in offshore for a minimum period of two years.

c) Shall be having current certification/approval/listing by an agency approved by the Company or UL or FM.

8.0 INSTALLATION REQUIREMENTS

8.1 Cable Runs and Segregations:

a) The Contractor shall ensure that there is no interference between cables having different voltage or signal types. Instrument cables shall be segregated from antenna cables and others carrying RF signals so as to avoid interference.

b) All instrumentation cables shall be supported / laid in trays. Power cables shall not be run in trays carrying signal cables. The physical separation of power and signal cables shall be as per API-552. Cables in intrinsically safe circuits shall preferably be not run in the tray for cables in non-intrinsically safe circuits. If run in the same tray a metallic earthed separator shall be provided. Conduits carrying intrinsically safe cables shall be painted with the blue color bands at each end. 3

c) Where cables are run through conduit, the entry and exit shall be smooth and free from burrs. The use of conduits shall be kept to a minimum, as far as possible.

d) Cables must be pulled into conduit in a way that ensures there is not damage to the cable.

e) Splices shall be made only at terminals, in instruments or approved equipment / junction boxes in any cable path.

8.2 Cable Marking:

a) All cables shall be identified with stainless steel cable markers securely fixed to the cable with cable tie wraps at the following locations:

- All cable glands
- Entering and leaving cable ladders, ducts and supports

- Both sides of walls or bulkheads

b) Cable markers shall be fitted during or immediately after cable installation.

8.3 Cable Identification:

a) All wiring, cables, tubes, multi-tube bundles, junction boxes and auxiliary equipment shall be suitably identified as per applicable codes and practices. Plastic adhesive tapes shall not be used for identification. Identification and details of all such equipment and wiring/tubing shall also be clearly marked on appropriate drawings. All wiring shall be tagged with slip on or clip-on wire marker at both ends with the wire number specified on the drawings.

b) Terminals for electrical connections including thermocouple extension wires shall be numbered and identified to indicate polarity, ground Connections, test connections, and any other pertinent information.

8.4 Cable Installation:

a) All instrument signal cables shall be continuously screened, with screens grounded at the equipment room end only, and securely insulated at the field end. All cables exiting equipment rooms shall be protected / armoured, including serial link and data highway cables. Where armour is not possible for certain cables, same shall be protected by way of pipes (GI) along the length up-to and into the MCT.

b) For ease of instrument disconnection, an adjustable elbow or union shall be provided between the terminating gland and the instrument.

c) A neat loop of cable 250 mm diameter shall be left immediately adjacent to all instrument devices in the field.

d) Cabling to locally mounted instruments shall not be routed across normal or emergency walkways nor interfere with access to equipment.

e) Multi Cable Transits (MCT) shall be used to provide gas-tight cable penetrations through control room wall, decks or firewalls.

f) Contractor shall size and provide MCT considering 50% spares for each cable size/Cable OD. Power, Control and signal cables shall be suitably separated within the MCT Frame.

8.5 Cable Termination:

a) All cables shall be terminated using double compression type glands on explosion proof equipment. These glands shall be explosion proof, certified. All cable glands in outdoor service and on equipment subjected to salt water spray shall be weather proof to IP 67. All terminations shall be screw clamp type terminals for 2.5-mm2 conductors minimum (no flying leads) and correctly certified where necessary. Insulated crimp lugs shall be used for all cable core connections, with only one conductor per terminal side.

b) No wire shall be terminated/left with mechanical strain on it in any conduit or trunking.

c) Cables shall be terminated in 316 SS glands, suitably certified where necessary. The inner sheath shall be left on the cable after the gland, and removed at the point of entry into wiring duct.

d) Cable cores shall not be 'pig tail' finish.

e) Cable screens and drain wires shall be securely fastened and insulated at the final field termination.

f) The communications conductor of a cable shall be terminated in the bottom terminal(s) of a row of terminals.

g) Printed sleeve-type ferrules shall be fitted to all cable cores on both sides of every core. 'C' type and adhesive type shall not be used.

h) All cables shall be individually loomed at maximum fixing centers of 60 mm and where cores leave the loom.

i) Only one conductor shall be used per terminal side.

j) All cables ends terminated at each end shall be covered with heat shrink type cable shrouds for protecting them from ingress of water, and foreign particles.

k) Cable entry to control room/other rooms shall be through listed multi-cable transits.

l) Terminal blocks shall be non-hygroscopic, Vibration proof, stack on type and shall use captive screws for terminals. Terminals shall be tinned or Silver plated. All terminations shall be through use of wire lugs. Terminal blocks shall be flame retardant type.

m) Cable Termination for Skid Items: Manufacturer or fabricator supplying skid mounted equipment or vessels with instrumentation which provides or utilizes off skid alarms / shutdowns / control functions, shall terminate signals on a central junction box, near skid boundary, available for hook-up by Contractor. The location of this junction box shall be noted on vendor drawings.

FUNCTIONAL SPECIFICATION

FOR PNEUMATIC

"HIGH-LOW PILOT SWITCH" 6

Prepared / Revised By	Reviewed By	Approved By	Total No. of Pages	Date	Rev. No.
Vivek Kumar	YOGESH DUDANI	S. Ravi Sankar		27.6.22	
VK	YD	SRS	9	27.06.2022	6
VS	ARD	AKR	7	27.08.2012	5
VS	SRS	GRP	7	18.02.2008	4
ET	RS	GRP	10	28.03.2007	3
ET	MC	RK	10	23.06.2005	2
ET	MC	RK	10	03.01.2005	1
AK	MC	AC	10	17.04.2003	0

Contents

6

Clause No.	Item		Page No.
1.0	Scope of this Document		3
2.0	Reference Documents and Specifications		3
3.0	Scope of supply		3
4.0	High-Low Pilot Switch		3
	4.1	Switch Type	3
	4.2	Material	4
	4.3	Accuracy	4
	4.4	Reading Scales	5
	4.5	Miscellaneous Requirements	5
Annexure I	Material Selection Chart		6
Annexure II	Hook-up Drawing		7
Annexure III	Data Sheet Format		9

1.0 Scope Of This Document:

6

1.1 This functional specification along with datasheets, IDC, P&ID and associated bid documents specifies the requirements for design, selection, sizing, testing, documentation and shipping of High-Low Pilot Switch, its materials and accessories.

6

2.0 Reference Documents and Specifications:

a) Basic Bid Work
b) Design Criteria-Process & Instrumentation
c) Project P & IDs
d) Process Data Sheets for instruments.

3.0 Scope Of Supply:

6

3.1 The quantity to be supplied, installed and commissioned shall be as per the requirements indicated in the Basic Bid Work and approved P&IDs specific to the project.

3.2 The vendor shall be responsible for the selection of the High – Low Pilot Switch suitable for its intended application, its procurement, tagging, packing, testing & calibration, preparation for shipment, along with accessories, spares, and assistance where required for its installation & commissioning at site. This FS shall be read in conjunction with the Instrument Design Criteria.

6

3.3 Vendor to attach following as minimum with PS:

i) Signed and stamped Instrument data sheets, GAD (General Arrangement Drawings) and other vendor documents. Signed and stamp copy of functional specification.

ii) Back-up literature and catalogues for the offered model with model decoding details and other details for each type of High – Low Pilot Switch and accessories offered.

4.0 High – Low Pilot Switch:

4.1 Switch Type:

6

4.1.1 The pneumatic pressure switch shall be of block and bleed type. It can be implemented in various configurations as defined in process P&ID of bid document:

i) The use of two pilot switches mounted on a common manifold allows for a high/low pressure sensor system. (PSHL).
ii) The use of two pilot switches mounted independently on the service line, acting as a low pressure cut off (PSL) and high pressure limit (PSH).
iii) The use of single pilot switch mounted on the service line acting as a low pressure cut off (PSL) or high pressure limit (PSH).

4.1.2 General:

4.1.2.1 High-Low pilots (PSHL) used in well head instrumentation shall be spring and piston type. For use elsewhere on the platform coil and tube type may be considered.

4.1.2.2 All shutdown and alarm switches shall be fail safe and abnormal condition shall cause a loss in output signals for pneumatic instruments.

6 **4.1.2.3** Pressure gauge for supply, input and output shall be in general as per applicable clauses of FS- 3401.

4.1.2.4 Output shall remain at 3.5 Kg/Cm2 between High and Low settings and 0 otherwise.

4.1.2.5 Process connection from bottom side, 316SS threaded ½" NPTF.

4.1.2.6 The switch element shall be selected in such a way that it can withstand an over-range pressure of 1.5 times maximum range without loss of calibration.

4.1.2.7 Connection for air or gas supply, transmission and control signals shall normally be internally threaded ¼" NPT.

4.1.2.8 Dead band shall be less than the difference between the normal operating pressure and set point. Dead- band shall be fixed type unless otherwise specified.

6 **4.1.2.9** The input ports shall be marked as HI IN and LO IN on the switch body and output port, marked OUT on the switch body.

4.1.2.10 The switching mechanism shall have long life and minimum wear and tear.

4.1.2.11 In general compressed instrument air/gas will be used, as pneumatic supply to instruments and vendor shall indicate pneumatic supply pressure requirement.

6 **4.1.2.12** High-Low Pilot Pressure switches shall be heavy duty, with user adjustable set point.

6 **4.1.2.13** Switch mounted in the field shall be weatherproof. (IP 65 or better).

6 **4.1.2.14** Supply of Air filter regulator with gauge shall be in general as per FS-3606.

4.2 Material:

4.2.1 The material requirements for Pressure switch shall in general be according to clause 3.6.4.5 of Instrumentation Design Criteria and the material selection chart provided in Annexure I of this specification.

4.2.2 Instrument parts shall be resistant to the corrosive properties of the process fluid and ambient conditions to which they are exposed.

4.3 Accuracy

4.3.1 The maximum error shall not exceed 1% of the span. Repeatability shall be ±1% for fixed dead band.

4.4 Reading Scales

4.4.1 Measuring unit of pressure in high-low pilot switch shall be in kg/cm2 or PSI.

4.5 Miscellaneous Requirements:

4.5.1 Mountings accessories required for high-low pilot switch shall be 316SS or better.

4.5.2 Pneumatic Pressure switches shall be tested for set points. These switches shall be calibrated using a hydraulic or dead weight tester or precision pneumatic calibrator prior to installation. A precision output meter, gauge or manometer shall be used to monitor the output. The manufacturer before shipment shall perform calibration and alignment of all instruments.

Annexure-1
Material Selection Chart

6

S. No.	Service Description	Refer to PMS for Piping Class	Item: Element/Socket
1	Vent Gas, Blow Down, Process Hydrocarbon Drain, Nitrogen, Chemical, Process Drain Water, Diesel Fuel, Hydrocarbon Liquid and vapor. (Except water injection service)	A1, B1, D1, E1, PE1	SS316
	Glycol	A2, B2, D2, E2	
	Acidization	XG1	
	Instrument air	A3, B3, D3,	
	Overboard lines	A8	
2	Water Injection Service	Refer PMS	Monel
3	Potable water, Lube Oil & Service Oil, Chemical	A4, A9, B9, D9, E9	SS316
4	Gas Turbine & Engine Exhaust	A6	SS316L
5	Raw Sea Water & Fire Water	A5	Monel
6	Chemicals	A22, B22, D22, E22	Hastalloy C-276
7	Corrosive Hydrocarbon service, Sour liquids and vapour	**A1N, B1N, D1N, E1N, F1N, G1N, , PB1N, PD1N, XG1N	SS316
8	Corrosive Hydrocarbon service, Sour liquids and vapour	A10, B10, D10, E10, F10	SS316L
9	Corrosive Hydrocarbon service, Sour liquids and vapour	A23, B23, D23, E23, F23, G23	Duplex SS

Note 1: **All process wetted parts shall be as per NACE MR-01-75 (Latest Edition) as minimum.
Note 2: Where the offered MOC is different than the one indicated above, Vendor shall provide the justification of it being better material and suitability to the Process fluid & Process Conditions.
Note 3: For any Service description not covered above, Vendor to follow material specified in PMS and/or P&ID.
Note 4: The MOC shall be as indicated above or better suiting the Process Conditions.

Annexure -II

HOOK UP DRAWING 6

i) PSHL

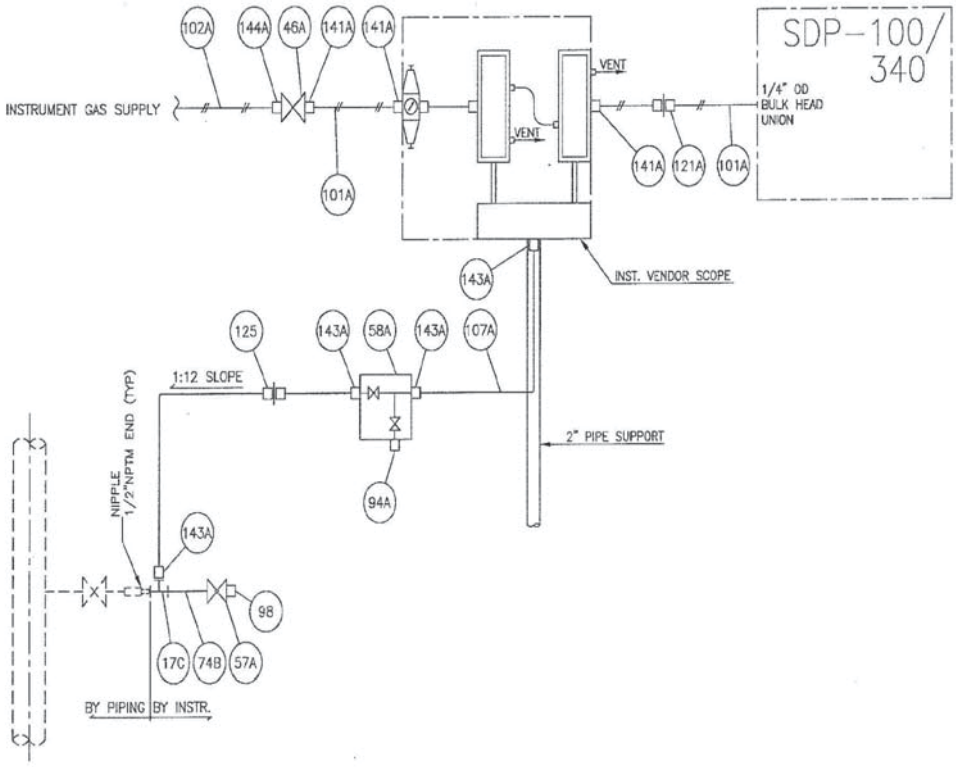

ii) PSH/PSL

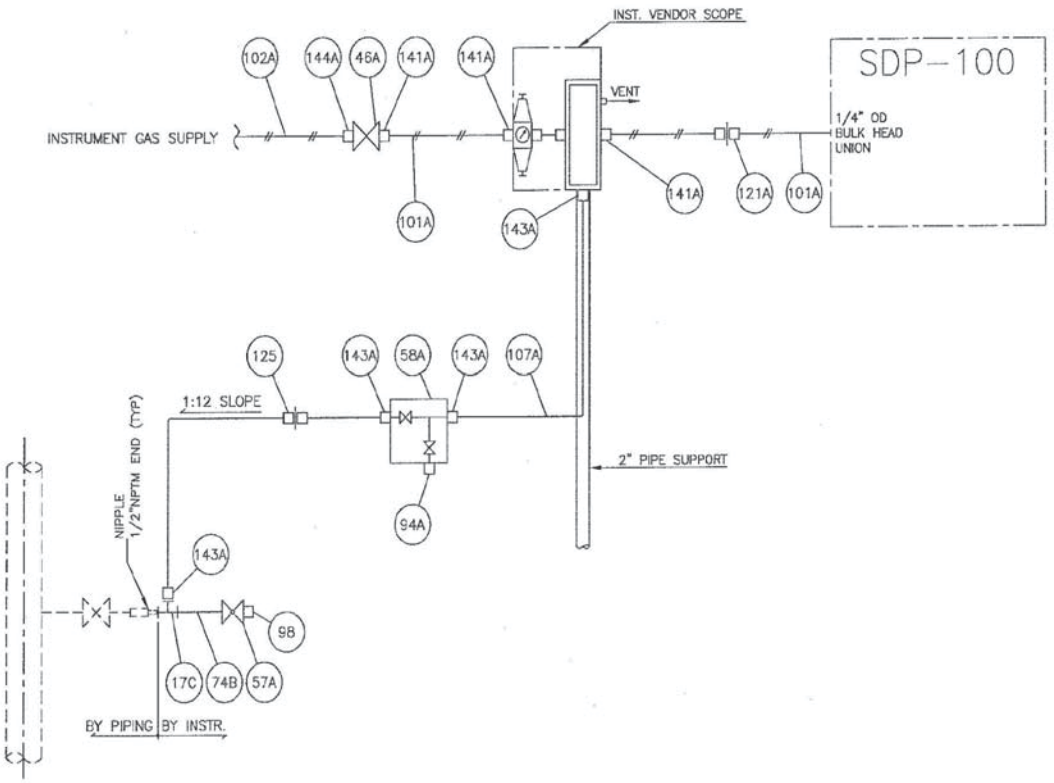

Typical Bill of Materials(Shown for typical High-Low Pilot Switch, material may vary depending on service.)

Item	Quantity	Size	Description	Material
17C	1	½" NPTF	PIPE EQUAL TEE, SCRD, 6000#	ASTM A-105 NACE
46A	1	¼" NPTF	BALL VALAVE, SCRD, 6000#	SS316 NACE
57A	1	½" NPTF	GLOBE VALVE, SCRD,6000#	SS316 NACE
58A	1	½" NPTF* ½" NPTF, ¼" VENT	2 VALVE MANIFOLD, 6000#	SS316 NACE
74B	1	½" NPTM, 3" LONG	PIPE NIPPLE, SMLS, TBE SCH XXS	ASTM A-106 Gr. B NACE
94A	1	¼"NPTM	TUBE PLUG	SS316 NACE
98	1	½"NPTM	PIPE PLUG, SCRD, 6000#	SS316 NACE
101A	30m	¼" OD* 0.035" WT	TUBE	SS316L NACE
102A	6M	3/8" OD* 0.035" WT	TUBE	SS316L NACE
107A	9M	½" OD* 0.065" WT	TUBE	SS316L NACE
121A	5	¼" OD	TUBE UNION	SS316 NACE
125	1	½" OD	TUBE UNION	SS316 NACE
141A	3	¼" NPTM* ¼" OD	MALE TUBE CONNECTOR	SS316 NACE
143A	4	½" NPTM* ½" OD	MALE TUBE CONNECTOR	SS316 NACE
144A	1	¼" NPTM* 3/8" OD	MALE TUBE CONNECTOR	SS316 NACE

Annexure -III
DATA SHEET FORMAT

PRESSURE SWITCHES (PNEUMATIC)		
UNITS:- Flow Liquid-M3/hr Gas-NM3/hr Pressure-kg/cm2 Temperature-Deg C Level/Length-M		
1.	Type	
2.	Function	
3.	Mounting	
4.	Case, Window	
5.	Electrical Area Class	
6.	Enclosure Class	
7.	Intrinsically Safe	
8.	Air Supply	
9.	Power Supply	
10.	Cable Entry	
11.	Accuracy	
12.	Repeatability	
SWITCH		
13.	Electric	
14.	Quantity	
15.	Form	
16.	Type	
17.	Rating	
18.	Load Type	
19.	Cable Entry	
20.	No. of entries	
21.	Pneumatic	
22.	Type	
23.	Signal	
24.	Set Point Adjustment	
25.	Differential	
Measuring Unit		
26.	Service	
27.	Element Type	
28.	Element Material	
29.	Socket Material	
30.	Body Material	
31.	Connection Location	
32.	Diaphragm Seal (Wherever Required)	
a.	Type	
b.	Wetted Parts	
c.	Other Material	
d.	Process Connection	
e.	Facing & Finish	
f.	Capillary Length	
g.	Flushing Filling Connection	
Miscellaneous		
33.	Over range Protection	
34.	Blow out Protection	
35.	Options	
a.	Mounting Accessories	
b.	Air Filter Regulator With Gauge	
c.	Intrinsically safe, Weatherproof output meter	
d.	Pressure gauges for supply, input and output	
36.	Pneumatic Connection	
37.	Load Driving Capability	

Tag No.	Range	Set Point 1	Set Point 2	Pressure		Temperature		Fluid	Service	Options
				Operating	Max	Operating	Max			

NOTE:

VENDOR SEAL AND SIGNATURE

ओएनजीसी ONGC	OFFSHORE ENGINEERING SERVICES	FUNCTIONAL SPECIFICATION FOR "P/I CONVERTER"	Spec. No.	3602
			Rev. No.	3
			Discipline	INSTT.
			Page: 1 OF 5	

FUNCTIONAL SPECIFICATION

FOR

"P/I CONVERTER (PNEUMATIC TO CURRENT)"

Prepared / Revised By	Reviewed By	Approved By	Total No. of Pages	Date	Rev. No.
Rakhi Sayeva	Gwandi	S. Ravi Sankar 29.6.21	5	29/06/21	3
RS	CNN	SRS	5	29.06.2021	3
VS	SRS	GRP	4	18.02.2008	2
AK	RS	GRP	6	23.03.2007	1
AK	MC	AC	6	03.03.2003	0

CONTENTS

Clause No.	ITEM		Page No.
1.0	Scope of This Document		3
2.0	Codes & Standards/ Reference Documents and Specifications		3
3.0	Scope of Supply		3
4.0	P/I Converter		3
	4.1	General	4
	4.2	Material	4
	4.3	Accuracy	4
	4.4	Reading Scale	4
	4.5	Enclosure Class	4
5.0	Installation Requirements		4
6.0	Calibration, Inspection & Testing		4
7.0	Tagging & Nameplates		4
Annexure I	Typical Datasheet		5

1.0 SCOPE OF THIS DOCUMENT

This functional specification describes the essential design considerations for the selection of P/I Converter for the intended service.

2.0 CODES & STANDARDS / REFERENCE DOCUMENTS & SPECIFICATIONS

a) Instrumentation Design Criteria

b) Basic Bid Work

c) Project P&IDs

d) Process Design Criteria/Instrument Process Data Sheets/Instrument List with Process Parameters

3.0 SCOPE OF SUPPLY

3.1 The quantity to be supplied and installed shall be as per the requirements indicated in the Basic Bid Work, P&IDs and approved Instrument Datasheets.

3 3.2 The vendor shall be responsible for the selection of the P/I converter suitable for its intended application, its procurement, tagging, packing, testing & calibration, preparation for shipment, along with accessories, spares, and assistance where required for its installation & commissioning at site. This FS shall be read in conjunction with the Instrument Design Criteria.

4.0 P/I CONVERTER

3 4.1 **General:**

4.1.1 The converter shall be Pneumatic to Current Type.

4.1.2 The input signal range of P/I converter shall be 0.2-1.0 Kg/cm2 (g).

4.1.3 The converter signal range shall be 4-20mA, 2 wire type and capable of delivering the rated current signal into external load of 600 ohms when powered with 24V DC.

4.1.4 P/I converter shall have externally adjustable zero and span. Setting adjustment shall have locking adjusting.

4.1.5 The P/I converter shall be provided with one nos. NPT (F) cable entries.

4.1.6 Process connection shall be from bottom side, 316SS threaded ½" NPTF.

4.1.7 Extended seal with silicone fluid can be used where the pneumatic connection is handling gas/corrosive fluids which may damage the internals (wetted part) of P/I converter.

4.1.8 Suitable environment protection shall be provided for P/I Converters to protect them during handling, installation and commissioning.

4.2 **Material:**

4.2.1 MOC of wetted part shall be minimum SS316/316L for air/gas, respectively. Instrument wetted parts shall be chosen according to clause 3.6.4.5 of Instrumentation Design Criteria.

4.3 **Accuracy:**

4.3.1 Accuracy shall be ± 0.5% of Span.

4.3.2 Due to change in ambient temperature the accuracy shall not change by 0.1% of the span.

4.4 **Reading Scale:** Units for P/I converter shall be in mA.

3

4.5 **Enclosure Class:**

4.5.1 The P/I Converter shall be certified by third party agencies like IEC/FM/UL/BASEEFA/CENELEC/CSA/DGMS/PTB/CMRI/ATEX for Class I, Div. I, Group C & D hazardous area.

4.5.2 The P/I converter shall be minimum IP 55 certified.

5.0 INSTALLATION REQUIREMENTS:

5.1 The installation of P/I Converter shall in general be according to clause 3.6.4.6 of Instrumentation Design Criteria.

5.2 P/I Converters shall be mounted as close as possible to sensing point. Mountings accessories shall be 316SS or better. All instrument supports shall be galvanized prior to installation.

6.0 CALIBRATION, INSPECTION & TESTING:

6.1 Calibration, inspection and testing requirements shall in general be as per clause 3.6.4.7.8 of Instrumentation Design Criteria.

7.0 TAGGING & NAMEPLATES:

7.1 Tagging & Nameplate requirements shall in general be according to Clause 3.6.6.1 of Instrumentation Design Criteria.

7.2 The P/I Converter shall be provided with SS name plate indicating the following:

- Tag Number
- Manufacturer's Name and Model Number
- Element material
- Enclosure classification
- Body material

ANNEXURE-I -TYPICAL DATA SHEET

PNEUMATIC ELECTRO TRANSDUCERS

UNITS :- Flow Liquid – m^3/hr Gas – sm^3/hr Steam – Kg/hr Pressure – kg/cm2 Temperature – deg C Level/length -mm

1	Type		11	Conduit Connection	
2	Mounting			Electrical	
3	Ambient Temperature			Pneumatic	
4	Air Supply		12	Accuracy	
5	Electric Supply		13	Actuation	
6	Output		14	Housing Type	
	Input		15	Accessories	
7	Pneumatic connection		16	Intrinsically safe	
8	Measuring Circuit		17	Body material	
9	Cold Junction Compensation		18	Internal material	
10	Burn-out Feature		19	Area Classification	

REV.	ITEM NO	TAG NO	RANGE	CALIBRATION	ON BURN-OUT OUTPUT	SERVICE	NOTES
		As per P&ID					

NOTE :-

VENODR SEAL AND SIGNATURE

FUNCTIONAL SPECIFICATION

FOR

AIR FILTER REGULATOR

PREPARED / REVISED BY	REVIEWED BY	APPROVED BY	TOTAL No. OF PAGES	DATE	REV. No.
31.03.2021	31.03.2021	31/3/21			
LGB	CNN	RS	5	31.03.2021	5
SM	ARD	AKR	5	15.01.2013	4
VS	SRS	GRP	4	18.02.2008	3
AK	BK	GRP	6	31.09.2006	2
ET	MC	RK	6	23.06.2005	1
ET	MC	AC	6	28.08.2003	0

CONTENTS

Clause No.	ITEM		Page No.
1.0	Scope of This Document		3
2.0	Codes and Standards		3
	2.1	Applicable Codes & Standards	3
3.0	Scope of Supply		3
4.0	Filter Regulator		3- 4
Annexure I	Data Sheet Format		5

1.0 SCOPE OF THIS DOCUMENT:

This functional specification describes the essential design considerations for the selection of Filter Regulator for the intended service.

2.0 CODES & STANDARDS:

Reference Documents and Specifications:

a) Instrumentation Design Criteria
b) Basic Bid Work
c) Project P & IDs
d) Process Design Criteria

3.0 SCOPE OF SUPPLY:

3.1. The quantity to be supplied and installed shall be as per the requirements indicated in the Basic Bid Work, Design Criteria and the P & IDs.

3.2. The vendor shall be responsible for the selection of the Filter Regulator suitable for its intended application, its procurement, tagging, packing, testing & calibration, preparation for shipment, along with accessories, spares, and assistance where required for its installation & commissioning at site. This FS shall be read in conjunction with the Instrument Design Criteria.

3.3. The Filter Regulator shall be provided for all instruments requiring regulated gas or air supply .The Filter Regulator shall include integral relief valve and output gauge and all other accessories necessary to make the system complete.

4.0 FILTER REGULATOR:

4.1. The Filter Regulator shall be provided with Gauge, Spring & Diaphragm, Drain Cock and Intermittent Bleed.

4.2. The inlet pressure to the filter regulator shall be as follows:

- Maximum: 10.6 Kg/cm^2g
- Normal : 7.5 Kg/cm^2 g
- Minimum: 5.5 Kg/cm^2g

4.3. The Filter Regulator shall have an adjustable range of 1 to 7 Kg/cm^2g. Range adjustment shall be possible with a hand wheel/knob with lock nut or an adjusting screw (SS 316) 5

4.4. The output gauge dial size shall be minimum 40mm.

4.5. The pneumatic connection size to the filter regulator shall be ¼", ½", 3/4" & 3/8" NPTF.

4.6. Mounting accessories required for 2" pipe mounting of the filter regulator shall be provided wherever required.

4.7. Operating Temperature range for Filter Regulator shall be minimum -20 ^{0}C to 80^0 C.

4.8. Manual drain for filter regulator shall be required.

4.9. The combination of pilot valves, pneumatic relay, SOV & AFR may be provided in compact modular construction from the approved vendors in the suggested vendor list for Solenoid Valves and / or filter regulators in SVL. 5

4.10. **Material:**

4.10.1. The Body of the filter regulator shall be made of SS 316 as minimum and the filter shall be 20-40 micron sintered Bronze/ sintered SS316/Sintered Porous Polyethylene.

4.10.2. The Diaphragm shall be made of reinforced Neoprene/Fluorocarbon/Polyester Fabric/Silicon/Viton/ Nitrile/Buna N

4.10.3. The internals of the filter regulator shall be SS 316 as minimum.

4.10.4. Wherever sour gas is used, the material of construction for the body and the internals shall meet the requirements of NACE MR-01-75 (Latest Edition)

ANNEXURE-I: TYPICAL DATASHEET FOR FILTER REGULATOR

FILTER REGULATOR		
UNITS: Flow Liquid- $M^{3/}$/HR, Gas-NM^3/HR, Pressure-Kg/cm^2 Temperature- ^{0}C Level /Length-M		
1.	Regulator type	
2	Fluid	
3	Inlet Pressure	
4	Outlet Pressure	
5	Range	
6	Output gauge size	
7	Regulator range adjustment mechanism	
8	Drain Cock	
9	Connection size	
10	Construction	
11.	Body Material	
	Bowl Material	
	Filter Material	
	Diaphragm Material	
	Internals Material	
	Spring Material	
12	Mounting Accessories	
13	Manufacture	
14	Model	
15	Notes	
Notes:-		
		VENDOR SEAL AND SIGNATURE

FUNCTIONAL SPECIFICATION

FOR

CONTROL VALVE

PREPARED / REVISED BY	REVIEWED BY	APPROVED BY	TOTAL No. OF PAGES	DATE	REV. No.
TKK	ARD	AKR	13	23. 02. 2010	4
VS	SRS	GRP	12	18.02.2008	3
AK	BKK	GRP	13	28.03.2007	2
AK	BKK	GRP	13	30.08.2006	1
MC	MC	AC	13	25.08.2003	0

CONTENTS

Clause No.	ITEM		Page No.
1.0		Scope of This Document	3
2.0		Reference Documents and Specifications	3
3.0		Scope of Supply	3
4.0		Control Valve	3
	4.1	Valve selection & construction	3
	4.2	Control valve sizing	4
	4.3	Actuator	4
	4.4	Positioner	5
	4.5	Material	5
	4.6	Miscellaneous Requirements	6
Annexure I		Material Selection Chart	8
Annexure II		Hook-up drawing	9
Annexure III		Data Sheet Format	13

1.0 SCOPE OF THIS DOCUMENT:

1.1 This functional specification describes the essential design considerations for the selection of Control Valve for the intended service.

2.0 Reference Documents and Specifications:

a) Instrumentation Design Criteria

b) Basic Bid Work

c) Project P & IDs

d) Process Design Criteria / Instrument Process Data Sheets

3.0 SCOPE OF SUPPLY:

3.1 The quantity to be supplied and installed shall be as per the requirements indicated in the Basic Bid Work, Design Criteria and the P & IDs.

3.2 The vendor shall be responsible for the selection of the Control Valve suitable for its intended application, its procurement, tagging, packing, stroke testing & calibration, preparation for shipment, along with accessories, spares, and assistance where required for its installation & commissioning at site.

4.0 CONTROL VALVE:

4.1 Valve Selection & Construction:

4.1.1 The Contractor shall select control valve based upon process flow capacity. The Contractor shall select reduced trim as required to satisfy the expected range of flow rate.

4.1.2 Valve selection shall consider all possible effect of erosion, cavitations and noise.

4.1.3 Maximum permissible noise level shall be 85 dBA at 1 m from valve in all direction. Noise mitigation by external noise reduction attachments shall be considered where noise levels increase beyond the limits.

4.1.4 Equal percentage and linear trim characteristic shall be used as applicable to process requirement. Quick opening type valve may be used for ON/OFF service only.

4.1.5 Globe valves are preferred for general service and shall be cage guided for low db application. In dirty or abrasive services (Produced liquids) post guiding is preferred. Pressure balanced plug type valve shall be used wherever diff. pressure across valve is high.

4.1.6 Butterfly control valves shall be used for water services, low differential pressure high flow and non-critical applications only.

4.1.7 In general, except flare gas service, process fluid entry to Cage type single seated globe valves shall be such as tending to open the valve (flow to open).

4.1.8 Shut-off leakage of valves shall be in accordance with ANSI B16.104. Tight shut-off (TSO) valves shall be class VI or better with soft seating (reinforced PTFE or similar).

4.1.9 Body rating, flange rating & facing and material of construction shall be in accordance with PMS / FS 401 the piping class specification for the associated piping.

4.1.10 Valve Packing boxes shall be flange bolted to the bonnet. Valve packing shall be spring loaded and adjustable. Teflon V rings shall be used up to 212^0C. Above this temperature graphite shall be used with an external lubricator and isolation valve.

4.1.11 Valve bonnets shall be flange bolted to the body. Screwed bonnets shall not be provided. For operating temperature of 200^0C or greater, a radiating finned bonnet may be required. For temperature below 0^0C an extension bonnet is required. If bellows seals are required they shall be constructed from 316SS.

4.1.12 Minimum body size shall be DN25.

4.1.13 Where a valve is for flare gas service, TSO valve with soft seats are required. For high-pressure drop application in gas service, multiple orifice trim design shall be used. Labyrinth design shall not be used.

4.1.14 Pneumatic connections shall be ¼" NPTF as minimum. Larger Port sizes shall be used wherever required for larger sizes of actuators.

4.1.15 Flow direction shall be stamped or cast on the body of all valves.

4.1.16 The Contractor shall provide detailed pressure temperature envelope curves for each combination of valve body, trim and elastomer material.

4.2 Control Valve Sizing:

4.2.1 The Control valve shall be selected to pass high extreme of flow at 80% maximum opening of the valve travel and low extreme of flow at 20% minimum opening of the valve travel. The control valve shall be sized for required maximum diff. pressure and shut-off pressure. Butterfly valves shall be sized to pass high extreme of flow at 60% maximum opening of the valve travel.

4.2.2 The Contractor shall submit Control Valve sizing calculation performed in accordance with ISA S 75.01 and based on approved Process data, Process flow diagram and material balance.

4.3 Actuator:

4.3.1 Control valve actuators shall be pneumatic, spring return type, diaphragm or piston type. Spring shall be corrosion resistant, cadmium plated or equal. Piston type actuator shall be used where diaphragm actuator cannot be used due to capacity limitation. Electric actuator shall be used wherever specified.

4.3.2 Actuators shall be sized for operation under maximum shutoff pressure drop across the valve minimum instrument air pressure or voltage to the actuator as specified in this specification.

4.3.3 Actuators shall be selected to achieve specified valve failure positions. All accessories, including pilot valves, relays, volume bottles etc. for double

acting actuator or air block relays for fail in position valves, shall be supplied with the valve.

4.3.4 A valve stem position indicator shall be provided. All control valve scales shall be calibrated from 0-100 % of valve travel. Smart positionar transmitters shall be considered for valve status indications in Process control room.

4.3.5 Side mounted heavy-duty hand wheels shall be provided for control valves wherever specified. Hand wheels material shall be corrosion resistant and with C-allowances over and above the thickness required as per design requirements. Hand wheels shall be normally in disengaged position and locked during normal Platform operation. These are to be used only during maintenance / manual operation.

4.3.6 Actuator action shall be designed and sized for Failure position indicated.

4.3.7 Diaphragm actuators shall be multiple bolted, pressed steel with Nylon reinforced Neoprene or Buna N Rubber Diaphragm and shall be corrosion resistant / with sufficient corrosion allowances to last the life of the platform.

4.4 Positioner : (Unless otherwise specified it shall be SMART Positioner)

4.4.1 Control valve shall be supplied fitted with positioner for all services except on/off control.

4.4.2 Wherever specified for non-smart positioner the control valve shall be provided with integral positioner with intrinsically safe “smart” type integral i/p converter, and shall be direct acting, with field reversible provision.

4.4.3 Gauges shall be fitted to indicate pressure of the pneumatic supply, signal and output to the actuator.

4.5 Material:

4.5.1 The material requirements for Control Valves shall in general be according to the Material Selection Chart provided in Annexure – I of Pressure Control Valve.

4.5.2 Control valve bodies shall generally be cast or forged carbon steel to ASTM A216 Gr WCB/WCC or A105 respectively with 316 SS trim as a minimum. However, more demanding services may require other materials as specified in the applicable valve specification/Material selection chart. Consideration shall be given in selection of all other valve part materials for erosion/corrosion due to process fluid and ambient conditions and valve trim/ plug shall be stellited.

4.5.3 For painting, in general, Manufacturer standard procedures shall be followed. However, specification enclosed in the bid shall govern and shall form the minimum requirements.

4.5.4 All mounting accessories such as mounting bolts shall be of SS 316.

4.5.5 Tubing shall be seamless 316 SS tube 3/8” OD minimum with 316 SS double ferrule compression fittings.

4.6 MISCELLANEOUS REQUIREMENT:

4.6.1 Control valves shall be installed in horizontal lines with Actuator vertically above the valve.

4.6.2 Clearance shall be provided to allow in- line maintenance of valves. Adequate clearance shall be provided above and below the valve to allow removal of the valve actuator and internal cage (trim) and valve bottom plate as applicable while not impeding access ways.

4.6.3 Control valve assembly shall be installed with two line isolation valves. One shall be provided at the upstream side of the control valve and the other at the downstream side. A bypass line shall be provided across the control valve with a line isolation (bypass) valve (globe type). Capacity of the bypass valve shall be in line with the control valve.

4.6.4 Control valves shall be installed in the direction recommended by the manufacturer and the valve shall not be subjected to stress due to pipeline movement or misalignment.

4.6.5 All valves shall be tested in accordance with API 598, hydro-tested to ASME B 16.34 clause 7.1, leak tested to ASME / FCI 70.

4.6.6 **Testing and Calibration :**

In accordance with nameplate data and instrument specification following Testing and Calibration shall be carried out:

i. All diaphragm and piston operated control valve shall be stroke tested pneumatically using a pressure regulator and pressure gauge against spring range.

ii. Mechanical sealing and travel shall be checked.

iii. Valve position shall be calibrated on control valve.

iv. Split range or reverse acting positioner shall not have bypass and shall be checked carefully.

v. Zero position shall be live zero (just off the seat at minimum setting with air).

vi. Signal line shall be bled to zero and failure action shall be confirmed.

vii. Control valve accessories such as hand wheel, booster, relay, Volume bottle etc. shall be checked operationally. Declutchable hand wheel shall be operable both with and without air signal to diaphragm.

viii. Check shall be made in shop prior to installation.

ix. Butterfly valves shall be checked carefully to see that vane moves freely into upstream and downstream piping. Proper vane movement to stroke shall be confirmed when specified.

4.6.7 Each Control valve shall have a 316 SS Name plate attached firmly to the body furnishing the following information:

- Tag Number
- Body and Port size
- Stem Travel
- Action on air failure
- Spring Range
- Air supply Pressure
- Manufacturer Model Number for valve body, actuator and positioner.
- P.O. Number
- Serial Number
- Leakage Class
- Body rating and material grade
- Signal range
- Trim Characteristics
- Body Test Pressure
- Bench set Pressure

ANNEXURE – I

Material Selection Chart for Control Valves

S. No.	Piping Class	Control Valves	
		Body	Trim
1	A1, B1, D1, E1, F1, XF1, F1, PA1, PB1, PD1, PE1, PXF1, PF1, A2, B2, D2, E2, XG1, A1H, A3, B3, A8 (EXCEPT WAT. INJ. SERVICE)	CS	SS 316
2	INJECTION WATER SERVICE	CS	SS 316
3	A4, A6, A9, B9, D9, E9	SS 316	SS 316
4	A5	ALUMINIUM BRONZE	MONEL
5	A7	HASTALLOY C.	HASTALLOY C.
6	A1N, B1N, D1N, E1N, F1N, XF1N, PA1N, PB1N, PD1N, PF1N, XG1N	CS NACE	SS 316 confirming to NACE
		PACKING - GRAPHOIL	
7	A10, B10, D10, E10, F10	SS 316	SS 316
		PACKING - GRAPHOIL	
8	A11, B11, D11, E11, F11, PA11, PB11, PD11, PE11, PF11	DUPLEX SS	SOLID ALLOY
		PACKING – GRAPHOIL/Teflon	

ANNEXURE – II

(Hook Up Drawing)

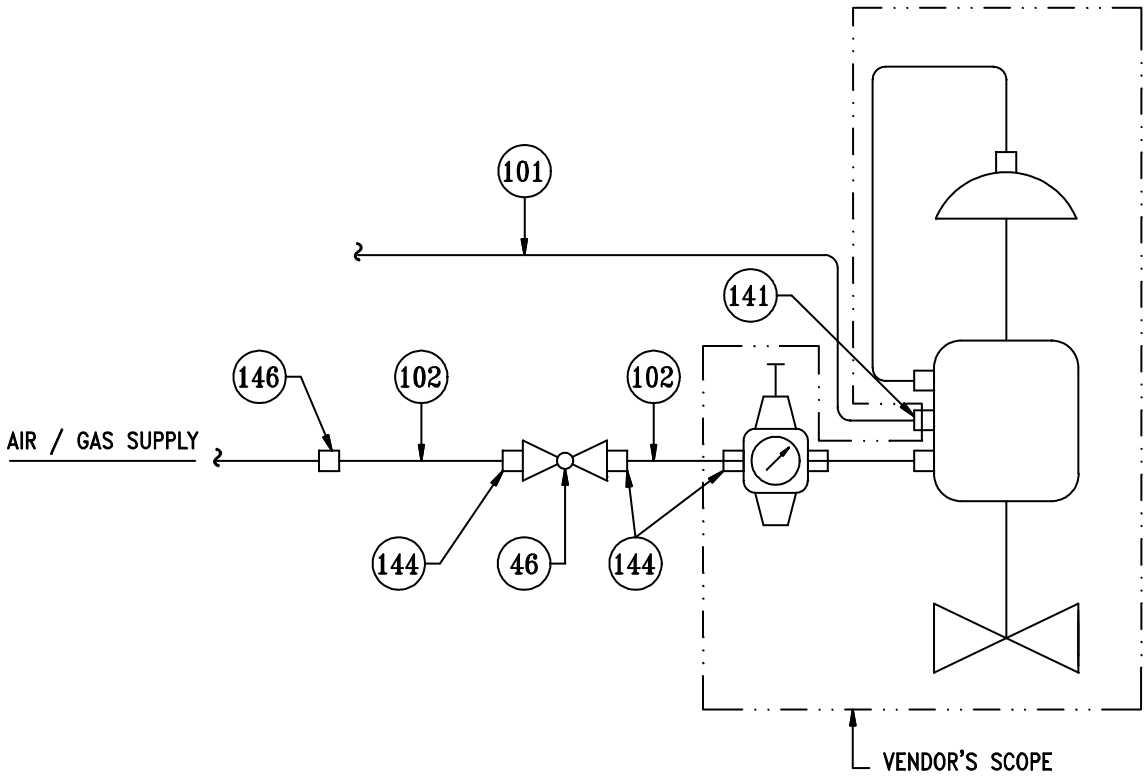

CONTROL VALVE

BILL OF MATERIAL				
ITEM	QTY.	SIZE	DESCRIPTION	MATERIAL
46	1	1/4"	BALL VALVE,SCRWD,NPTF	
101	A/R	1/4"ODx0.035THK.	TUBING	
102	A/R	3/8"ODx0.035THK.	TUBING	
141	1	1/4"THx1/4"OD	MALE TUBING CONNECTOR,NPTM	
144	3	1/4"THx3/8"OD	MALE TUBING CONNECTOR,NPTM	
146	1	1/2"THx3/8"OD	MALE TUBING CONNECTOR,NPTM	

ANNEXURE II (Contd.)

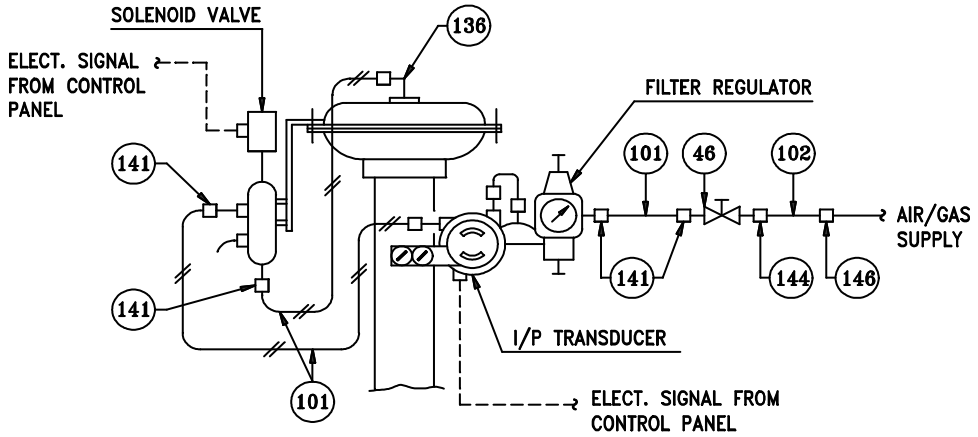

AIR FAIL TO OPEN CONTROL VALVE WITH I/P AND POSITIONER

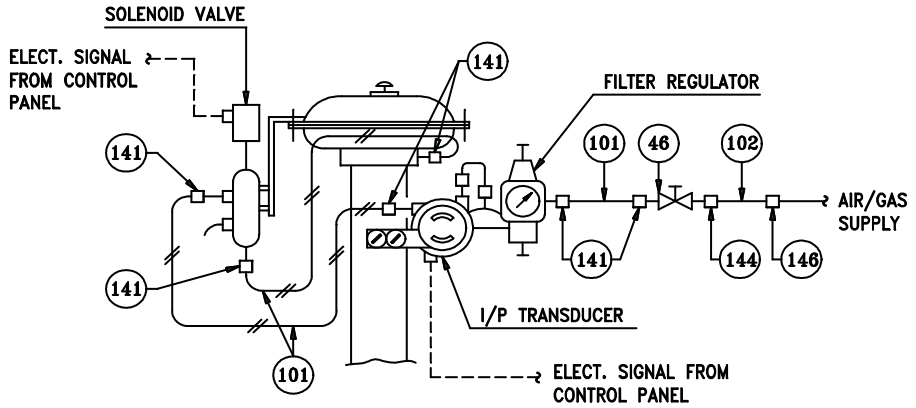

AIR FAIL TO CLOSE CONTROL VALVE WITH I/P AND POSITIONER

NOTE:– TRANSDUCER, AIR SET AND SOLENOID VALVE MAY BE INSTALLED AND CONNECTED TO VALVE TOPWORKS BY MANUFACTURER.

BILL OF MATERIAL

ITEM	QTY.FOR		SIZE	DESCRIPTION	MATERIAL
	DET.1	DET.2			
46	1	1	1/4"	BALL VALVE SCRD NPTF	SS 316
101	A/R	A/R	1/4"OD.x0.035"THK.	TUBING	SS 316
102	A/R	A/R	3/8"OD.x0.035"THK.	TUBING	SS 316
136	1	–	1/4"THKx1/4"OD	MALE ELBOW TUBING CONNECTOR, NPTM	SS 316
141	7	8	1/4"THKx1/4"OD	MALE TUBING CONNECTOR, NPTM	SS 316
144	1	1	1/4"THKx3/8"OD	MALE TUBING CONNECTOR, NPTM	SS 316
146	1	1	1/2"THKx3/8"OD	MALE TUBING CONNECTOR, NPTM	SS 316

ANNEXURE II (Contd.)

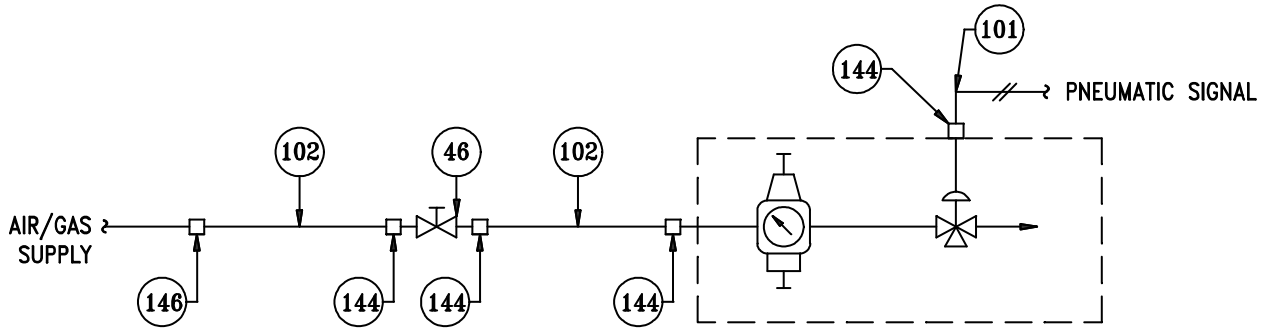

CONTROL VALVE WITH PILOT VALVE

BILL OF MATERIAL				
ITEM	QTY.	SIZE	DESCRIPTION	MATERIAL
46	3	1/4"	BALL VALVE SCRD NPTF	SS 316
101	A/R	1/4"OD.x0.035"THK.	TUBING	SS 316
102	A/R	3/8"OD.x0.035"THK.	TUBING	SS 316
136	3	1/4"THKx1/4"OD	MALE ELBOW TUBING CONNECTOR, NPTM	SS 316
139	3	1/4"THKx3/8"OD	MALE ELBOW TUBING CONNECTOR, NPTM	SS 316
141	6	1/4"THKx1/4"OD	MALE TUBING CONNECTOR, NPTM	SS 316
144	12	1/4"THKx3/8"OD	MALE TUBING CONNECTOR, NPTM	SS 316
146	3	1/2"THKx3/8"OD	MALE TUBING CONNECTOR, NPTM	SS 316

ANNEXURE II (Contd.)

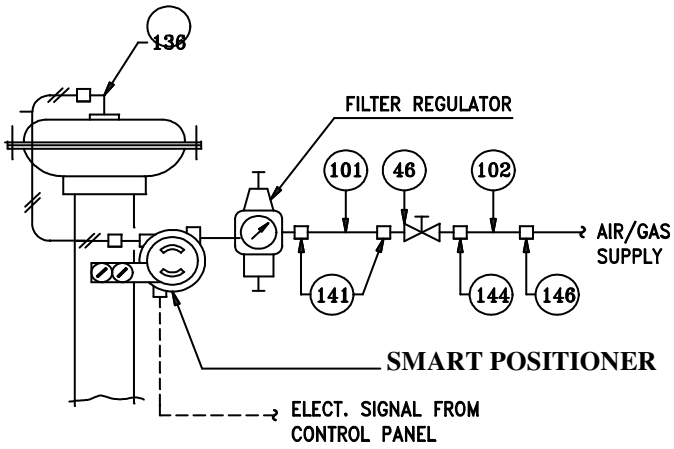

AIR FAIL TO OPEN CONTROL VALVE WITH SMART POSITIONER

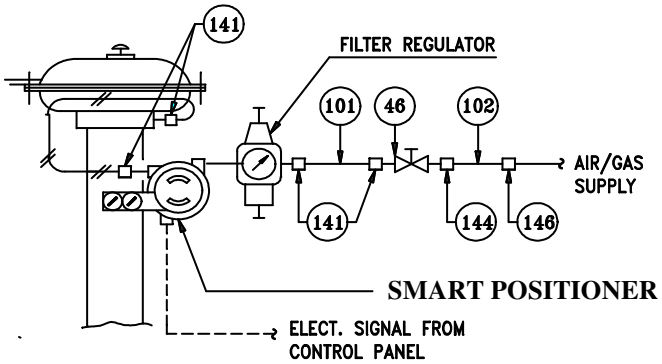

AIR FAIL TO CLOSE CONTROL VALVE WITH SMART POSITIONER

NOTE:– TRANSDUCER, AIR SET AND SOLENOID VALVE MAY BE INSTALLED AND CONNECTED TO VALVE TOPWORKS BY MANUFACTURER.

BILL OF MATERIAL

ITEM	QTY.FOR		SIZE	DESCRIPTION	MATERIAL
	DET.1	DET.2			
46	1	1	1/4"	BALL VALVE SCRD NPTF	SS 316
101	A/R	A/R	1/4"OD.x0.035"THK.	TUBING	SS 316
102	A/R	A/R	3/8"OD.x0.035"THK.	TUBING	SS 316
136	1	–	1/4"THKx1/4"OD	MALE ELBOW TUBING CONNECTOR, NPTM	SS 316
141	7	8	1/4"THKx1/4"OD	MALE TUBING CONNECTOR, NPTM	SS 316
144	1	1	1/4"THKx3/8"OD	MALE TUBING CONNECTOR, NPTM	SS 316
146	1	1	1/2"THKx3/8"OD	MALE TUBING CONNECTOR, NPTM	SS 316

ANNEXURE – III: - TYPICAL DATA SHEET FOR CONTROL VALVE

UNITS: Flow → Liquid : M^3/Hr, Gas : SM^3/Hr or Kg/Hr, Steam : Kg/Hr, Pressure : Kg/Cm^2 G, Temp: ^{0}C Level / Length : MM

General	1.	Tag No.			
	2.	Inlet No.			
	3.	Outlet No.			
	4.	Service			
	5.	Line Size	Schedule		
	6.	Inlet Line I.D.	Outlet Line I.D		
Body	7.	Type of Body			
	8.	Body Size	Part Size		
	9.	Guiding	No. of Parts		
	10.	End Conn. Type. Size & Rating			
	11.	Facing & Finish			
	12.	Body Material			
	13.	Bonnet Type			
	14.	Packing Material			
	15.	Lubricator	Isolation . Valve		
	16.	Trim Form			
	17.	Trim / Plug (Stellite Mat.) /Disc/Ball & Seat Mat.			
	18.	Other Wetted Parts			
	19.	Soft Seating	Material		
	20.	ANSI Leakage Class			
Actuator	21.	Type			
	22.	Close At	Open At		
	23.	Failure Position			
	24.	Hand wheel & Location			
Positioner	25.	Air Supply Pressure			
	26.	Input	Output		
	27.	Bypass	Gauges		
Options	28.	Solenoid Valve			
	29.	I/P Converter			
	30.	Filter with Gauge			
	31.	Limit Switch			
	32.	Smart Positioner			
	33.				
Service Conditions	34.	Fluid	State		
	35.	Flow Liquid- Min	Normal	Max	
	36.	Flow Vapour- Min	Normal	Max	
	37.	Flow Water Min	Normal	Max	
	38.	Inlet Pr. – Nor	Min.		
	39.	Process Flow Rate Min	Normal	Max	
	40.	Pressure Shut Off			
	41.	Temp. Oper.	Max		
	42.	Oper. S. G.	Mol. Wt.		
	43.	Cp/Cv	Compress Factor		
	44.	Flash %	Visc. mPass (Oper)		
	45.	Deg. Of Superheat			
	46.	Vapour Pr.	Critical Pr.		
Valve Data	47.	Cv Min.	Cv. Max.		
	48.	Cv. Nor.	Selected Cv		
	49.	Predicted Sound Level dBA			
	50.	Inlet Velocity m/s			
Model Nos.	51.	Valve	Actuator		
	52.	Positioner	Solenoid Valve		
	53.	IBR Certification			

NOTE :-

VENDOR SEAL AND SIGNATURE

FUNCTIONAL SPECIFICATION

FOR

PRESSURE RELIEF VALVE (PRV)

PREPARED / REVISED BY	REVIEWED BY	APPROVED BY	TOTAL No. OF PAGES	DATE	REV. No.
Rakhi Sayena	ARD	AS	9	20/3/19	7
RS	ARD	AS	9	20/3/19	7
CNN	ARD	AS	8	15.11.2017	6
MD	ARD	KM	8	28.06.2017	5
TKK	ARD	AKR	8	28.08.2012	4
TKK	ARD	AKR	8	14.12.2010	3
VS	SRS	GRP	7	18.02.2008	2
AK	RS	GRP	10	28.03.2003	1
AK	MC	AC	10	25.08.2003	0

CONTENTS

Clause No.	ITEM		Page No.
1.0	**Scope of This Document**		**3**
2.0	**Reference Documents and specificati**		**3**
3.0	**Scope of Supply**		**3**
4.0	**Pressure Relief Valve**		**3**
	4.1	**Basis of selection**	**3**
	4.2	**Sizing**	**4**
	4.3	**Set pressure**	**4**
	4.4	**Material**	**5**
	4.5	**Valve springs**	**5**
	4.6	**Miscellaneous requirements**	**5**
Annexure I	**Material Selection Chart**		**7**
Annexure II	**Data Sheet Format**		**8**

1.0 SCOPE OF THIS DOCUMENT:

1.1 This functional specification describes the essential design considerations for the selection of Pressure relief valve for the intended service.

2.0 Reference Documents and Specifications:

a) Instrumentation Design Criteria
b) Basic Bid Work
c) Project P & IDs
d) Process Design Criteria / Instrument Process Data Sheets

3.0 SCOPE OF SUPPLY:

3.1 The quantity to be supplied and installed shall be as per the requirements indicated in the Basic Bid Work, Design Criteria and the P & IDs.

3.2 The vendor shall be responsible for the selection of the Pressure relief valve suitable for its intended application, its procurement, tagging, packing, testing & calibration, preparation for shipment, along with accessories, spares, and assistance where required for its installation & commissioning at site. This FS shall be read in conjunction with the Instrumentation Design Criteria.

4.0 PRESSURE RELIEF VALVES:

4.1 **Basis of selection:**

4.1.1 All relief valves of size 1" and above shall be full nozzle full lift type. Relief valves with size less than 1" shall be base or modified nozzle type.

4.1.2 Flanged relief valves for process piping, excluding steam and air pressure piping shall be either the enclosed spring type or pilot-operated type.

4.1.3 Balanced relief valves shall be used if the variable backpressure is more than 10% of valve set pressure or where the service is corrosive. Balanced relief valves suitable for variable backpressure may also be used where appreciable savings in the discharge disposal system piping can be affected by virtue of the increased allowable backpressure. Balanced bellow materials shall be the same as the valve trim.

4.1.4 Rupture disc type pressure relief devices shall not be used as primary relief devices.

4.1.5 Relief valves 1" and larger shall be of the type having a nozzle bushing which extends through and beyond the base of the inlet-bolting flange, and which forms the gasket-bearing surface for the inlet flange.

4.1.6 ¾ " and 1" relief valves may have screwed ends. All process Relief valve 1” size and larger shall have flanged inlet and outlet connections.

4.1.7 Thermal relief valves shall have a minimum orifice area of 38.7mm^2.

4.1.8 Venting and breathing equipment for low pressure above ground storage tanks shall be in accordance with the API STD 2000 "Guide for venting atmospheric and low pressure storage tanks".

4.1.9 Lifting levers shall be provided for periodic testing of the Pressure Relief Valve. Closed bonnet construction shall be used.

4.1.10 All castings and welding shall be 100% radiographed.

4.2 **Sizing:**

4.2.1 The vendor shall size pressure relief valve according to capacity, set point, reset differential and the blow down requirements of the Process for the Project.

4.2.2 The selected orifice shall be the next standard orifice size available above the calculated area. Valve capacity shall then be calculated based on the selected orifice code.

4.2.3 For two-phase liquid/vapour relief application, the total orifice area shall be the sum of the orifice areas calculated individually for liquid and vapour at the actual conditions.

4.2.4 In Pressure Relief valve sizing calculations, the fail open state of a control valve (if any) shall be taken into consideration.

4.3 **Set Pressure:**

4.3.1 Set point of the Pressure Relief valves shall not be higher than the design pressure of the system being protected by the valve, except as permitted by the relevant ASME Codes & API 521/526.

4.3.2 The set pressure of a pressure relief valve shall not be adjusted outside the range of set pressure specified by the device manufacturer. The allowing tolerances in set pressure are as below:
The set pressure tolerance, plus or minus, of pressure relief valves shall not exceed ±2 psi (15 kPa) for pressure up to including 70 psi (500kPa) and ±3% for pressure above 70 psi (500kPa)

4.4 **Material:**

4.4.1 The material requirements for pressure relief valve shall in general be according to clause 3.6.4.5 of Instrumentation Design Criteria and the material selection chart provided in Annexure –1 of this specification.

4.5 **Valve Springs:**

4.5.1 Valve spring shall be sized to meet the requirement of ASME Section VIII Division 1, UG - 136.

4.6 **MISCELLANEOUS REQUIREMNTS:**

4.6.1 Relief valve shall have tamperproof sealing, by wiring of screw cap and body, and lead sealing.

4.6.2 The installation of Pressure Relief Valve shall in general be according to clause 3.6.4.6 of Instrumentation Design Criteria.

4.6.3 Where no possibility of hydrocarbon pollution (such as in water and air service), pressure relief valves may be vented to atmosphere, with due consideration of position and angle of venting.

4.6.4 Pressure relief valve shall be installed after testing/setting for set pressure, blow down and seat tightness.

4.6.5 Discharges from all Pressure relief valves shall be individually routed to common header/ safe location, as per P&ID.

4.6.6 All pressure relief valves discharge lines shall join the relief header from top and shall be at an angle of 30 to 40 degrees with the axis of the header.

4.6.7 All pressure relief valves discharge and equipment depressurizing lines shall be free draining to vent header and shall have no pockets up to and including header.

4.6.8 Discharge piping shall be designed to avoid liquid collection, backpressure build up, and stress on the valve body under all conditions. A low point discharge drain may only be fitted on relief valves venting to atmosphere.

4.6.9 Inlet piping shall be arranged to ensure that pressure drop at full flow does not exceed 3% of set pressure.

4.6.10 Isolation valves provided at up-stream of double PSVs (1 working + 1 standby) should have both lockable open and lockable closed provisions with mechanically interlocked arrangement so that both the valve cannot be isolated simultaneously (one LO and other shall be LC).

4.6.11 Contractor shall arrange all facilities free of cost to company engineer or their authorized representative for inspection and witness to the following tests at vendor's works:

- Material –Body, trim etc.
- Physical- Visual and dimensional as per API/ASME/ASTM standards.
- Pop-up test.
- Seat tightness test

4.6.12 Pressure relief valves shall be tested for opening at specified set pressure and also for seat tightness.

4.6.13 Testing for seat tightness shall be in accordance with the latest edition of API Std. 527.soft seating (coring) shall be provided wherever tight shutoff is called for.

7

4.6.14 Valid certificate of "ASME Section VIII, Div.I, UV Stamp" to be provided by the vendor along with the supply of Pressure relief valves and the same shall be included in the PS.

4.6.15 Compressed air or nitrogen shall be used for testing pressure-relief valves (gas service) and shall be furnished by the contractor prior to handover.

4.6.16 For liquid service pressure relief valve, water may be used as testing medium.

4.6.17 The following information shall be shown on the nameplates as a minimum:

- Manufacturer's Name and trade mark.
- Valve Model and serial number
- Tag number.
- Valve catalogue number.
- Set pressure.
- Purchase order number.
- Valve manufacturer.
- Valve body, spring and nozzle material.
- Orifice designation
- Valve inlet and outlet connection sizes and ratings.
- Back pressure.
- ASME Code stamp shall be marked

ANNEXURE – I
Material Selection Chart

Sl. No.	Piping Class	Pressure relief valve			
		Body& Bonnet	**Wetted Parts (Nozzle, disc) (forged)**	**Bellows**	Spring
1.	A1, B1, D1, E1, F1, XF1, F1, PA1, PB1, PD1, PE1, PXF1, PF1, A2, B2, D2, E2, XG1, A1H, A3 (above 2"), B3 (above 2"), A4, A8	CS/ASTM A216 Gr .WCB	SS316/ SS PH17/4	SS316/ SS321	Inconel-750
2.	A3 (upto2"), B3(upto2"), D3 (upto2"), A6, A9, B9, D9, E9	SS316	SS316	SS316	Inconel-750
3.	A5	AL. BRONZE / MONEL	MONEL	MONEL	Inconel-750
7 4.	A12	Titanium	Titanium	Hastalloy-C	Hastalloy-C
5.	A1N, B1N, D1N, E1N, F1N, XF1N, PA1N, PB1N, PD1N, PF1N, XG1N	CS (NACE)	SS316/ SS316L (NACE)	SS316/ SS321 (NACE)	Inconel-750
7 6.	A10, B10, D10, E10, F10, A22	SS316L (NACE)	SS316L (NACE)	Inconel-625	Inconel-750
7.	A23, B23, D23, E23, F23, PA23, PB23, PD23, PE23, PF23	DSS (UNS-32205	DUPLEX SS (UNS-32205)	Inconel-625	Inconel-750
7 8.	-----	Hastalloy-C	Hastalloy-C	Hastalloy-C	Hastalloy-C

ANNEXURE-II:-TYPICAL DATA SHEET

Pressure Relief Valve

UNITS: Flow-> Liquid- m*3/hr Gas- Nm*3/hr Steam- kg/hr Pressure- > kg/cm^{2}g Temperature-> ˚C Area-in^2 7

General	1.	Tag Number			
	2.	Line Number /P&ID no.			
	3.	Vessel Protected			
	4.	Safety / Relief			
	5.				
Valve Body	6.	Type			
	7.	Full Nozzle, Full Lift / Modified Nozzle			
	8.	Bonnet Type			
	9.	Conventional/Bellows/ Pilot operated			
	10.	Inlet Connection : Size & Rating			
	11.	Facing & Finish			
	12.	Outlet Connection : Size & Rating			
	13.	Facing & Finish			
	14.	Cap over Adjustment Bolt			
	15.	Screwed Bolted			
	16.	Lifting Gear Type			
	17.	Test Jig			
	18.				
Material	19.	Body & Bonnet			
	20.	Nozzle & Disc.			
	21.	Spring			
	22.	Bellows			
	23.	Bolts and Nuts			
	24.	Resilient Seat Seal			
	25.				
Basis	26.	Code			
	27.	Basis of Selection			
	28.				
Service Conditions	29.	Fluid & State			
	30.	Corrosive Constituents			
	31.	Required Flow Capacity			
	32.	Mol. Wt. / Sp. Gr. At Relieving Temp.			
	33.	Operating Pressure			
	34.	Operating Temp./Relieving Temp.			
	35.	Valve Discharges to : Flare/Vent/Close Drain			
	36.	Back Pressure : Constant / Variable			
	37.	Set Pressure			
	38.	Cold Bench Test Pressure			
	39.	% Over Pressure / %Blow Down			
	40.	P/Cv/Compressibility Factor			
	41.	Viscosity At Relieving Temperature cP			
	42.	Vessel Wall Temp. Surface Area			
Orifice	43.	Calculated Area			
	44.	Selected Area Orifice Designation			
	45.	No. of valves required for capacity			
	46.	Total Area			
	47.	Actual Flow Capacity/Rated flow capacity			
	48.				
Model	49	Make			
	50.	Model Number			
	51.	IBR certification			
	52.	ASME UV Stamp			

7

NOTE:-					
					VENDOR SEAL AND SIGNATURE

Electrical Functional Specification

WHRU REPLACEMENT PROJECT

VOLUME – IIIB

OIL AND NATURAL GAS CORPORATION LIMITED
INDIA

INDEX

ELECTRICAL FUNCTIONAL SPECIFICATION

Sl. No.	FUNCTION SPECIFICATION NUMBER	FUNCTION SPECIFICATION NAME	Rev. No.
1	FS 4001	CP system for Offshore Structure	Rev-9
2	FS 4003A	Nav aids for SPM, SBM	Rev-2
3	FS 4005	Cable tray	Rev-3
4	FS 4006	Lighting fixtures & JB for classified area	Rev-9
5	FS 4008	Electric Motors	Rev-5
6	FS 4010	Emergency luminaire	Rev-5
7	FS 4011	Electrical Cables	Rev-5
8	FS 4012	Explosion Proof Control Station	Rev-3
9	FS 4013	LV Switchgear	Rev-6
10	FS 4017	Packaged equipment plant	Rev-5
11	FS 4021	Cable Transit System	Rev-0
12	FS 4028	Light Fitting & J Boxes For Unclassified Area	Rev-6
13	FS 4034	Industrial type plugs and sockets	Rev-1
14	FS 4035	Miscellaneous switchboards and panels	Rev-2
15	FS 4043	Electrical Cables Glands	Rev-1

FUNCTIONAL SPECIFICATION

FOR

“CP System for Offshore Structure”

Prepared / Revised By	Reviewed By	Approved By	Total No. of Pages	Date	Rev. No.
S. Kumar	K. Rajamouly	A. Sezhian	09	22.09.2017	9

1. SCOPE

This specification defines the minimum requirements for the material selection, design, manufacture, supply and installation of a sacrificial type cathodic protection system with monitoring facilities (wherever required) for offshore structures. The structures include all offshore structures like platform jackets, clamp-on structures on existing platforms, flare or bridge support tripods, SPM including PLEM and other appurtenances permanently attached to any of the structure.

2. CODES & STANDARDS

2.1. Design and installation of the cathodic protection system shall be in accordance with good marine engineering practice in corrosion protection and compliance with the latest revisions of following Codes & Standards:

Det Norske Veritas: DNVGL RP B 401, 2017

National Association of Corrosion Engineers:
NACE STANDARD SP 0176-2007
NACE STANDARD SP 0387-2014

American Petroleum Institute: API RP 5L

American Society for Testing and Materials: ASTM A36

National Electrical Code: NEC

National Electrical Manufacturers Association: NEMA

3. SITE CONDITIONS:

As specified in the General Design Criteria enclosed in the bid package.

4. Deleted

5. TECHNICAL REQUIREMENTS

5.1. General

Cathodic protection system shall be made up of anodes with a configuration and anodic material composition suitable for use in seawater. All raw materials finished products and components of the CP system and monitoring assemblies specified herein shall be

new and unused, of current manufacture, of highest grade and free from all defects and imperfections that could adversely affect the performance of the system.

5.2. Design:

5.2.1. The cathodic protection system for the Jacket structure shall be designed in accordance with DNVGL RP B 401, 2017 and the requirements of this Specification.

5.2.2. For C.P. System design following current density and driving potential shall be considered irrespective of the values specified in Codes.

1. Current Density in sea water (initial) :150 mA/m²
2. Current Density in sea water (final) :100 mA /m²
3. Current Density in sea water (average) : 80 mA/m²
4. Current Density in sea mud : 20 mA/m²
5. Driving potentials (initial and near end life) : 250 mV

- For calculation of Anode mass, electrochemical efficiency shall be taken as 2000 AHr/Kg for sea water and 1500 AHr/Kg for sediments.

5.2.3. Design Life: same as the design of the platform specified elsewhere in the bid package.

5.2.4. Cathodic protection method: sacrificial anodes

5.2.5. Coating breakdown factor shall be considered as per DNVGL RP B401 for painted structures.

5.2.6. Anode Utilisation factor shall be considered as given in Table:

Anode Type	Anode Utilisation Factor
Long slender stand-off L>=4r	0.90
Short slender stand-off L<4r	0.85

5.2.7. **Surface Areas Definition for CP system design:**

The system shall be adequately designed to protect all exposed steel surface of the structure along with its various metallic components in the submerged zone and in the splash zone area. The submerged zone and splash zone for CP system design have been defined in Table – 4 of structural design criteria Part-II enclosed in the bid package.

In order to account for structural design variation during detailed engineering, an allowance of 10% shall be added to jacket surface area including appurtenance at the commencement of detailed engineering for cathodic

protection (anode calculation). The area shall be as per jacket drawing nearing finalization & put up for the approval.
The zone wise anode distribution details shall be attached along with jacket drawings at first instance.
The contractor shall, however, prepare a comprehensive list covering all structural members/assemblies considered for cathodic protection along with their individual surface area calculation and total surface area calculation and submit it to Company, along with jacket drawings, for review and approval.

The following factors shall also be taken into consideration-

- Piles from mud line up to a depth of 30 meters shall be considered.
- Pile surface areas are to be calculated taking into account apparent batter.
- Internal surface area of the main pile is not required to be considered.

5.2.8. Current Drain

The current drain of structures that do not need protection but are still exposed to sea water and electrically connected to the protected structure need to be considered in the cathodic protection design.
For buried structures of mud mat, piles, etc., current drain shall be calculated as per DNVGL RP B 401.

5.2.8.1 Current Load for Conductor casing

Wherever it exists, a current drain of 5A shall be included for each well to account for protection of buried portion of well conductor casing/ false casing. However, surface area of conductor and conductor guide in seawater shall be included in total surface area of the structures to be protected by CP system.

5.2.9 Interference

Suitable arrangement to prevent interference in cathodic protection system from structures protected through impressed current CP system shall be made by the vendor.

5.2.10 Clamp-on structures:

Vendor shall calculate the exact surface area based on structural drawings and furnish details of the same. The surface area of all the components as defined in section 5.2.7 shall be considered for cathodic protection. External surface area only shall be considered for conductors, conductor guide support framings, clamps including stiffeners, stubs and anode clamps. Both external and internal surface area shall be considered for conductor guides and conical plates. In

addition to the above, 10% contingency, especially for fasteners and other fixtures of clamps, shall be included in total surface area to be protected.

5.2.11 The complete surface area of PLEM shall be considered for cathodic protection.

5.2.12 Submerged surface area and splash zone surface of SPM shall be considered for cathodic protection.

5.3 Anode Material

Anodes shall be GALVALUM-III or Equivalent (Al-Zn-In) alloy suitable for protection of steel in submerged marine environment. They shall not have any mercury content. The potential of the sacrificial alloy material shall be (-) 1.08V or more negative referred to a silver/silver chloride reference electrode. The Electro-chemical efficiency of anode material shall be minimum 2500 AH/Kg after four (4) days of operation as per DNVGL RP B 401.

6. TESTING AND INSPECTION

6.1 Anode Composition analysis:

Anode composition analysis shall be undertaken by methods agreed upon in advance. Two samples from each melt shall be taken for chemical analysis. The samples shall be taken in the beginning and at the end of casting from the pouring string. Checking of closed circuit potential and practical mass consumption shall be done for each 15 ton produced anodes. The test samples may be separately casted or cut directly from an anode. Ampere-hour capacity test shall be carried out by weight loss method only.

6.2 After casting, the inspection of the anodes shall be done to ensure that:

6.2.1 AH capacity of anodes shall not be less than the figures considered for design i.e. no negative tolerance shall be permitted.

6.2.2 Closed circuit potential shall be within (+) 10 mV and (-) 50mV of the guaranteed value. For example, for design value of (-) 1.08 volts, anodes having closed circuit potential less negative than (-) 1.07 Volts shall be rejected.

6.2.3 The anodes shall have minimum net weight (Gross weight minus core weight) within a tolerance of + 2.0% to – 1.0%. However, overall negative tolerance shall be 0% to ensure that is no short fall in total alloy weight.

6.2.4 Dimensions shall be within tolerance limits indicated in the approved drawings. No negative tolerance shall be allowed in standoff dimensions.

6.2.5 At least one anode per delivery or at least 0.5 percent of the anodes shall be subjected to destructive testing to check that the casting is to an acceptable standard, each anode shall be cut at 3 of the most relevant locations. The cut surface shall generally be free from visible pores and slag/dross inclusions. The lack of bond or void between anode core and anode material shall not exceed 5%.

As an alternate to a destructive testing, a non-destructive testing by radiography may be used to check for lack of bond or slag/dross inclusions if so permitted by the Company or its authorized representative.

6.2.6 Anode to steel insert shall be checked for electrical continuity. The resistance between the connector and the body of the anode shall not exceed 0.005 ohm.

6.2.7 The anodes shall be free from mechanical defects like cracks, shrinkages, excessive flash, surface projections, laminations, cold laps, surface slag etc. as consistent with good casting practice. Criteria for accepting these shall be as per NACE STANDARD SP 0387.

6.2.8 All the above Inspection / tests shall be witnessed by Company or its authorized representative.

6.2.9 All anodes shall be delivered with material certificate from the Vendor stating batch identification number and chemical analysis.

6.3 All work, materials, and equipment's shall be subjected to inspection by Company at all reasonable times. However inspection by the Company shall not relieve the Vendor of his responsibility under terms of contract.

6.4 The monitoring system shall be inspected after completion of fabrication and prior to load out. These checks shall include:

- Polarity checks on all monitored anodes.
- Insulation and continuity test of all cables.
- Calibration tests shall subsequently be carried out on all instrumentation and reference electrodes.

7. ANODE DIMENSIONS AND PHYSICAL CHARACTERISTICS

Anode shall be standoff type. The steel core of the anode and stub pipes or brackets provided for mounting the anode on the platform structure shall conform to ASTM-A36 (for structural shapes) and API-5L Gr. B Seamless (for pipes) or equivalent.

7.1 The core shall be of nominal 4 inch schedule 80 seamless steel pipe or equivalent structural shape. Anode material shall surround the core.

7.2 Stand off-legs shall be of nominal 4 inch schedule 80 size. Standoff separation between the underside of the anode alloy and the cathode surface (member to be protected) should be in the range of 250 to 450 mm. Distance between the two legs shall be less than the anode length. The free ends of the legs shall be welded to the gusset plates superimposing the member.

8. ANODE DISTRIBUTION:

8.1 Anode distribution on the structural members of new jacket structures shall be based on advanced computer modeling techniques such as Boundary Element Method (BEM) to ensure uniform current distribution. The contractor shall submit all relevant details of the techniques used/ procedures adopted, datasheets, results, drawings etc., for

Company's review and approval during detailed engineering and prior to commencement of the installation of anodes over the structural members.

8.2 Anode locations shall ensure early polarization of structures to provide adequate protection at node welds. Anode for SPM chains and piles shall be mounted on SPM whereas those for PLEM piles shall be put on PLEM itself. Anode to be installed on PLEM shall be suitable for saline mud as well.

8.3 Clamp-on structures:

Anode distribution for clamp-on structures shall be carried out taking into consideration that current distribution is uniform without considering any contribution from the existing CP System.

9 MONITORING SYSTEM

9.1 General

Monitoring system shall be required only for the cathodic protection of process platform jackets and shall be designed to provide the following as minimum requirements:

a) The measurement of the effectiveness of the cathodic protection system as judged by potential measurements.
b) The performance of the sacrificial anodes as judged by measurements of current output of monitored anodes.
c) Cathodic protection system for unmanned well platforms, clamp-on structures, Flare tripod, SPM, PLEM shall be unmonitored.

9.2 Reference Electrodes

9.2.1 12 Nos. of reference electrodes shall be provided on the Jacket, out of which 4 will be used for vertical plane potential measurement and 8 for horizontal plane potential measurement. The electrodes shall be located in areas where the potential is expected to be least negative. The vertical plane electrodes shall be installed at two different planes with two electrodes in each plane and the horizontal plane electrodes shall be installed in two different elevations with four electrodes in each elevation.

9.2.2 The electrodes shall be of high purity (99.99%) Zinc to ASTM B418 Type 2. Each reference electrode shall be supplied with sufficient cable length to run between the selected location and the junction box.

9.3 Monitored Anodes

9.3.1 The monitoring system shall also include four monitored anodes which shall be located at two different elevations on the structure with two anodes at each elevation.

9.3.2 The monitored anodes shall be identical to those supplied for the structural protection system and have the same physical characteristics but suitably modified so that current outputs can be electrically measured at the monitoring panel. The anodic material of the monitoring anodes shall be electrically insulated for those parts of the anode core to be welded to the structure with an insulation resistance, of not less than one mega ohm(when dry) and reducing to not less than one thousand ohms(when wet). Prefabricated isolating joints with suitable mechanical properties shall be utilized.

9.4 Monitoring panel

The monitoring panel shall be located in the switchgear room or other suitable location in safe area. The panel shall be of sheet steel (14 SWG) construction with an enclosure protection equivalent of IP-51 or NEMA-12. The monitoring panel, as a minimum, shall contain the following;

a) Selector Switches, manually operated, one for each reference electrode and monitoring anode.
b) Voltmeter with capability to measure the potential difference between the structure and each of the reference electrodes.
c) Ammeter with capability to measure the current output of each of the monitored anodes.
d) Built in Meter calibration facility for checking the calibration and accuracy of the instruments.
e) Mimic diagram showing the platform jackets to be cathodically protected shall be included on the front of the panel. Positioning of all reference electrodes and monitored anodes shall be marked distinctly on it. Different colors shall be used for marking structures, monitored anodes and reference electrodes. The positions of reference electrodes and monitoring anodes get illuminated when they are selected for voltage or current readings respectively. LED displays may be used for this purpose.
f) Recording unit provisions
g) Painting in accordance to Spec no 2005

Power supply for the panel shall be provided by the contractor and the vendor shall specify the total power required for the panel.

10. CABLING

All cabling from each reference electrode and monitored anode shall be brought to a metallic waterproof junction box, mastic filled and mounted on the jacket/walkway level in unclassified area. The cables shall be double insulated, abrasion, ozone and weather resistant and suitable for total immersion in sea-water. The cable shall be routed through a conduit and supported from the jacket by welded bracket. The main raiser conduit shall be clamped at frequent intervals for adequate supporting.

11. SERVICE AFTER INSTALLATION

11.1 The vendor shall provide necessary test equipment, material and services of a corrosion specialist and carryout performance tests at the site after jacket installation and verify that required protection level has been achieved.

11.2 The contractor shall carry out CP survey to ascertain the effectiveness of the cathodic protection system provided for the jacket structure. The survey shall be carried out after 60 days of the launching of jacket (and before 180 days maximum) to ensure that the structures are sufficiently polarized. Survey can be conducted earlier also provided it is established that structure is sufficiently polarized.

11.3 Post installation jacket Survey shall be carried out by either drop cell method or diver/ROV assisted method. In case of insufficient polarization at any level, further survey shall be carried out with diver/ROV assisted method to locate deficient area for corrective action. During detailed engineering, the contractor shall develop and submit to ONGC for approval the detailed procedure for carrying out CP survey.

12 VENDOR DATA REQUIREMENTS

Vendor shall furnish the following information related to the anodes:

12.1 Dimensional drawings of sacrificial anodes, monitored anodes and reference anodes and supporting parts or accessories along with separate as well as assembled drawings for their supporting parts and other accessories

12.2 Guaranteed minimum electrochemical value in ampere-hour per kg

12.3 Net, gross, and buoyant weight of anodes.

12.4 Minimum closed-circuit potential in volts.

12.5 Recommended means of anode support.

12.6 Anode alloying compositions (% age by weight and volume)

12.7 Testing method of anodes and details of the test procedure. The test shall establish the guaranteed minimum electro-chemical value of the anode material and its potential w.r.t. Ag/AgCl reference electrode under site conditions.

12.8 Analytical information regarding the location of reference electrode (which has to be located in least negative potential area.).

12.9 Calculation of anode quantity and weight based on current and weight basis for the designated design life

12.10 Cable type /specification along with routine and type test certificates.

12.11 Type test certificate for monitoring panel (IP-51)

12.12 Routine and type certificates for cable glands, junction boxes, pull boxes etc.

12.13 Vendor shall confirm and provide guarantee for the design life (minimum) for reference anodes with necessary back up calculation and other relevant data.

FUNCTIONAL SPECIFICATION

FOR

NAVIGATIONAL AIDS SYSTEM FOR SPM/SBM

Prepared / Revised By	Reviewed By	Approved By	Total No. of Pages	Date	Rev. No.
SK, AM	NNJ	PK	09	02.06.2021	2
			10		1

1.0 SCOPE

This specification defines the minimum requirements of the electric power system to be installed on SBM/ SPM for meeting the power requirement of Navigational Aid System and provide adequate and complete safeguards to all vessels, navigating the area of installation. Power to these individual systems shall be catered by solar system and backed up by battery bank. The supplier's scope shall include complete design, fabrication, assembly at works, testing at works and supply of all individual equipment and necessary components required for satisfactory operation of the electric power system. The suppliers' scope includes supply of any item not specified explicitly in this specification so to make the above systems complete and operable.

2.0 CODES AND STANDARDS

2.1 All applicable standards and maintenance regulations, such as those published by the International Association of Light-house Authorities (IALA) and local laws shall be met by the supplied equipment.

2.2 Apart from the requirements laid down by "IALA", the equipment supplied shall comply with the requirements of the latest revision of the relevant standards of:

NEC	-	National Electrical Code.
NEMA	-	National Electrical Manufacturer's Association.
NFPA	-	National Fire Protection Association.
API	-	American Petroleum Institute.
ANSI	-	American National Standards Institute.
ASTM	-	American Society for Testing and Materials
BIS	-	Bureau of Indian Standards
IEC	-	International Electro-technical Commission
IEEE	-	Institute of Electrical and Electronics Engineers.

2.3 Any other recognized applicable international codes or standards.

3.0 SITE CONDITIONS

All the equipment shall be suitable for use in harsh marine environments. The equipment shall be tropicalized and treated to protect the same against the site conditions as specified in the bid package.

4.0 SCOPE OF SUPPLY

The scope of supply through this specification shall include, but not necessarily be limited to design, fabrication, testing and supply of the following equipment to make the system complete in all respects:-

i) One unit of marine obstruction light lantern (LED type)

ii) Power system incorporating solar panels, Solar power controller, battery bank with accessories, interconnecting cables.

iii) Junction boxes, Nickel/Chromium plated brass, double compression type cable glands, tinned copper lugs etc.

5.0 TECHNICAL REQUIREMENTS

The system including all components shall be suitable for Zone-1 hazardous area classification. The surface temperature of the system shall be limited to 200 ^{0}C, T3 class maximum and shall be certified by IECEx/ATEX/UL or such equivalent testing authority. All the components shall have ingress protection of minimum IP-66. Battery enclosure shall have IP-56 ingress protection. The certification mark shall be attached where it is easily visible. Remote status & alarm facility shall be available in the system.

5.1 OBSTRUCTION LIGHTS

All components and devices shall be ready for direct mounting with footings, stanchions, bases and housing supplied. LED lights shall be used for navigational-aid lantern.

The lights shall be equipped with clear acrylic fresnel lenses and have a range of at least 10 Nautical miles in a 360 degree circle. A transmissivity factor of 0.74 shall be taken for selecting the luminaire. The lights shall be synchronised to flash the Morse Letter 'U' in unison at an interval of 15 seconds. The flash cycle shall be as below:

0.4sec. - ON

0.5sec. - OFF

0.4sec. - ON

0.5sec. - OFF

1.2sec. - ON

12sec. - OFF

The lights shall be controlled by sun switch mounted inside the lantern and designed to flash continuously in the event of failure of sun switches and shall burn steadily if the polarity is accidentally reversed during hook-up/rewiring.

Each flashing unit shall be provided with a flasher and automatic synchronisation feature. The lights shall operate at 12/24V D.C.

5.2 Power System

- Photovoltaic solar panels (Solar Panels)
- Solar Power Controller
- Battery bank

The solar panels, and the solar charge controller shall be sized to meet through battery backup, the load cycle requirements of navigational obstruction.

5.2.1 Solar Panels

Minimum Two (02) nos. solar panels shall be provided, positioned in order to generate all required power by the system. The individual photovoltaic elements shall be connected in suitable series parallel combinations to obtain the required voltage and current rating of a solar module/panel.

The Solar Panel shall be sized for the minimum Solar Irradiation Data of 3.86kWh/m²/day and design conditions of the bid package. Solar panel shall be high efficiency type, minimum 14% efficiency (after considering –ve tolerance in power, if any).

Output current shall consider cell temperature, voltage drop in cables & controller, float voltage of battery & negative tolerance, if any. Suitable bypass diodes shall be provided for partial shadowing of modules if recommended by the manufacturer.

After working out the output current at operating point, the following derating factors shall be applied: -

a. Deterioration factor over life span or 15% whichever is higher
b. Losses due to dust deposit - 1%.
c. Losses due to module/branch mismatch or 2% whichever is higher.
d. Losses due to line resistance of cables (panel to controller)
e. Losses in field wiring and array wiring.
f. Losses in solar controller

g. Battery charge/discharge efficiency of 95% or whichever is lower
h. Any other derating factors considered essential for satisfactory and guaranteed performance of Solar Power System (e.g. Negative tolerance on nominal rating of solar panels)
i. Derating factor of 2% or as applicable (whichever is higher) to account for panel orientation other than the specified one as per insolation data

5.2.1.1 Panel Construction

The solar modules shall have suitable encapsulation and sealing arrangement to protect the silicon elements (cells) from the environment. The arrangement and material of encapsulation shall be compatible with the thermal expansion properties of the Silicon Cells and the module framing arrangement/material. The encapsulation arrangement shall ensure complete moisture proofing for the entire life of the solar module.

5.3 BATTERY BANK

5.3.1 The Battery Bank shall be charged from the surplus power available from the solar panel. The battery cells shall be low self-discharge lead acid valve regulated type and maintenance free. The battery cells shall be provided with flame arresting type catalytic caps.

The battery shall incorporate the following features:

-High charging efficiency
-Good cycle life, even for deep discharge
-Extended life expectancy
-Long maintenance interval
-Large electrolyte reservoir.

The type, AH capacity & no. of cells in the Battery Bank shall be decided on the following basis:

i) Geographical and climatic conditions prevalent at site.
ii) Back up during low insolation period considering the de-rated solar panel output and insolation.
iii) Battery suitable for 800 or more charge-discharge cycles for 60% depth of discharge.
iv) Minimum 7 no-sun days back-up to independently feed the loads plus losses if any in case of failure of charging system.
v) Aging factor over the life span
vi) Self discharge during low insolation periods considering average ambient temperature of 30 ^{0}C.

5.3.2 The battery sizing criteria shall be as follows:

a) Operation time of obstruction light : 14 hours/day
b) Surge factor for obstruction light current : As per manufacturer's catalogue
c) Ageing factor for the battery : 0.8
d) Temperature correction of battery capacity: 16 ^{0}C.

5.4 Solar Power Controller

The solar power controller shall regulate the charge of the battery and shall monitor the charging current from the solar panel. Power from the battery set and solar panel shall be routed through the solar controller. Circuit breaker shall be used for the circuit or device protection.

The solar controller shall have the following features as minimum: -

i) The battery bank shall be automatically disconnected from solar panels when state of charge of the battery reaches 110% or maximum permissible charge (as indicated by the battery manufacturer). The battery bank shall be automatically reconnected to the Solar panel when the state of charge of the battery drops to 100%.

ii) Load current & charging current display

iii) Solar panel failure status display

iv) System output and battery voltage display

v) LED display for repeat code flashing

vi) Charge-discharge indication, load disconnection status

vii) A low battery volt trip function for battery deep discharge.

viii) Various fail alarms and indicators for ease of fault finding and rectification.

ix) Digital Ampere-Hour Meter for load.

x) Protection feature to take care of faults in bus, solar controller, solar panel, and battery circuits etc viz. lantern OK/Stand-by/Fail, Driver circuit OK/Fail etc.

5.4.1 General Requirements

a) Panel Construction

The panel enclosure shall be marine grade suitable for IP-66, Ex-d type construction. Panels shall be provided with necessary lifting hooks and mounting brackets/base channels.

b) Wiring

The terminal blocks shall be suitable for the voltage and current available in the system. The terminal block shall have a white plastic marking strip of the length of the terminal block. All

wirings shall be identified by permanent slip-or clip-marking sleeves on each terminating wire in addition to marking at the terminal block.

c) Earthing: As per relevant codes and standards.

6.0 MATERIAL AND FINISH

All materials shall be selected and finished to resist the site and climate conditions specified in the bid package. All electronic circuit boards shall be tropicalized to prevent corrosion and fungus growth. Painting shall be marine grade, suitable for offshore installation.

7.0 IDENTIFICATION

All lanterns, battery, and related devices and materials shall have affixed externally a permanent tag in a contrasting colour and lettering of suitable dimension so that tag is clearly visible. The tag inscription shall be in line with the equipment number list.

8.0 TESTING AND INSPECTION

All tests shall be carried out as per relevant standard at Vendor's works. The hazardous area certificates for the system shall be submitted. Testing and inspection shall include but not necessary be limited to the following:

8.1 Obstruction Lights

- Laboratory tests of luminaries for their compliance with the indicated range, IALA compliance
- Test reports and type test certificates shall be furnished to the Company.

8.2 Solar Panels:

- Type test certificates & test reports suitable for 'Ex' zone-1 certificate
- Orientation of solar panels on the system

8.3 Battery

- All routine tests as per applicable standards
- Type Test certificates for battery & box suitable for 'Ex' Zone-1

8.4 Solar Controller

- Earth continuity Test
- Functional Test
- Insulation Resistance Measurement
- Heat run Test
- Functional Test
- Type test certificate for 'Ex' Zone-1

Functional Test check for complete Assembly.

9.0 VENDOR DATA REQUIREMENTS

9.1 GENERAL

- Make, type and catalogue no. of equipment.
- Dimension, weight general arrangement & mounting details drawings.
- Type test certificates
- Routine test certificates
- Applicable International Standards.
- Installation, Operating and maintenance manual.
- Hazards and safety precautions.
- Catalogues and brochures.
- Interconnection diagram for various equipment along with cable size.
- Bill of material
- Completed Vendor data sheet.

9.2 Obstruction Lights

- Load cycle and AH demand calculation per day.
- Range test certificate.
- Maximum and minimum current demand for the extreme limits of voltage and ambient temperature
- Minimum guaranteed life of Lamps used in obstruction light.
- Certificates to indicate temperature rise limits and suitability for area classification.

9.3 Solar Panel

- I-V characteristics
- Solar panel sizing calculations

9.4 Battery Set

- Depth of discharge V/s. No. of cycles.
- Selection criteria including sizing calculation
- Recommended float/boost charging voltage and current

9.5 Solar Controller

- Operating write up.
- Schematic and wiring diagrams.
- Expected temperature at critical points for maximum load.

10.0 CERTIFICATION

All offered equipment or equipment of similar design manufactured by same Supplier:

- Shall have been type tested by an accredited agency or laboratory.
- Shall be having current certification approval listing by UL/FM/ATEX/IEC etc.

11.0 PACKING AND TRANSPORTATION

The offered equipment along with their accessories shall be suitably packed for offshore transportation & installation, as per site conditions and shipped to site.

FUNCTIONAL SPECIFICATION FOR FRP CABLE TRAY SYSTEMS

PREPARED / REVISED BY	REVIEWED BY	APPROVED BY	TOTAL NO. OF PAGES	DATE	REV.
B.R	K.R	A.S	5	02-03-2017	3

1. SCOPE :

The intent of this specification is to define the requirements of Fibre Glass reinforced plastic cable tray systems, including ladder type cable trays, ventilated and solid bottom cable trays, tray cover, necessary hardware, accessories and fittings etc. required for laying of power and control cables on offshore platforms.

2. CODES AND STANDARDS:

2.1. The following codes and standards shall form part of this specification.

ANSI/NFPA	American National Standards Institute/National Fire Protection Association.
NEC	U.S. National Electrical Code
NEMA FGI-1	U.S. National Electrical Manufacturer's Association.
ASTM	American Society for Testing and Material
BSI	British Standards Institution.
IEC	International Electrotechnical Commission
BIS	Bureau of Indian Standards

3. SITE CONDITIONS :

The cable trays shall be designed for installation on an offshore location. Site conditions are specified in General Design Criteria enclosed in the bid package.

4. SCOPE OF SUPPLY :

The scope of supply through this specification includes:

4.1. Fibre glass reinforced, ladder type cable tray, ventilated and solid bottom cable trays, tray covers.

4.2. Accessories such as bends, tees, crosses, reducers, splicers and necessary hardware etc.

5. TECHNICAL REQUIREMENTS :

Hereafter the term "cable tray" shall refer to ladder type cable trays, ventilated and solid bottom cable trays unless specifically mentioned.

5.1. Fibre Glass Cable Trays :

5.1.1. All FRP products shall be halogen free. Fibre glass cable trays shall be manufactured in accordance with NEMA FGI 1993.

5.1.2. All cable trays and accessories shall be manufactured of the fibre glass by Pultrusion process and shall be corrosion resistant and fire retardant (Flame spread index <=25, Smoke developed index <=450) in accordance with the latest ASTM E-84. An additive material shall be mixed with the fibre glass to make them resistant to ultraviolet light.

5.1.3. The minimum glass content in FRP material shall be 55%.

5.1.4. The ladder type trays shall have side rails and horizontal rungs. Both of these shall be of same material i.e. the Fibre glass with additive. The rungs shall be placed 300 mm apart from each other.

5.1.5. The inside depth of the cable trays shall not exceed 150 mm.

5.1.6. The tray construction shall have high degree of finish and shall be such as to facilitate easy handling as also to ensure easy laying of cables without causing damage to cables. The inside surface shall be perfectly smooth and free from sharp edges, burrs or projections, etc. The edges of the trays which have been cut should always be protected with the help of suitable coating system so as to protect the edges.

5.1.7. Cable ladder should follow NEMA FG1 standard with minimum of 12C class and the cable trays should follow IEC 61537 standard for loading. Span for ventilated/ solid bottom trays shall be 3m. Electrical performance (Resistivity) shall conform to ASTM D257 (less than 1.5x10^9 ohm). All cable trays shall have chemical additives to protect

against ultra violet (UV) ray (Tensile strength reduction and flexural strength reduction should be less than 7% when tested for 1000 hours as per ASTM G 154 and flexural strength reduction).

5.1.8. For perforated and solid bottom tray the following load list shall be considered in addition to self load

50 mm width – 10 kg/m
100 mm width – 20 kg/m
150 mm width – 30 kg/m
300 mm width – 60 kg/m
600 mm width – 90 kg/m

5.1.9. Deflection of cable trays and ladders shall be as per IEC 61537.

5.1.10. Cable Trays / Ladders and Fittings shall be supplied with pre-drilled resin finished holes to accept manufacturer standard coupler plates.

6. TESTING AND INSPECTION :

Testing and inspection of cables trays shall include but not necessarily be limited to the following:

6.1. A quantitative check shall be made to ensure that all items with accessories are present according to order and the packing list.

6.2. A visual inspection shall be made to ensure that good workmanship and practice were maintained throughout the fabrication.

6.3. Acceptance test for load deflection test shall be carried out for one sample of each type.

6.4. Following type test certificates shall be submitted for each type of tray system.

6.4.1. Flame spread test and smoke index test
6.4.2. Anti static property test (ASTM D257)
6.4.3. UV resistance property test (ASTM G154)

6.5. Company reserves the right to witness the final test and inspection. Prior notice of at least 20 days shall be given to enable the Company to depute its representative to witness the test.

7. SPARES :

Vendor shall supply all accessories for cable trays and cable ladders such as splice connector complete with nuts, bolts, cover clamps, hold on clamps and cover. Additionally, 20% spares of accessories such as splice connector complete with nuts, bolts, cover clamps, hold on clamps shall be provided.
These shall be properly wrapped and packed separately, clearly marked as “spare hardware” for cable trays and shipped along with trays. Packing list shall be furnished so that the parts can be handled without uncrating, if required.

8. CERTIFICATION :

All offered cable trays or those of similar designs manufactured by the same supplier:

- shall have been type tested by an authority approved by the Company.
- shall be having current certification/approval/listing by an approved agency or UL or FM

9. PACKING AND TRANSPORT :

The offered cable trays along with their accessories shall be shipped to site packed in wooden crates. They shall be wrapped with polythene sheets, before being placed in the crates to prevent damage to finish. Crates shall have skid bottom for handling.

FUNCTIONAL SPECIFICATION FOR LIGHT FIXTURES AND JUNCTION BOXES FOR USE IN CLASSIFIED AREA

PREPARED / REVISED BY	REVIEWED BY	APPROVED BY	TOTAL NO. OF PAGES INCLUDING THIS	DATE	REV.
Ashish Kumar	Ajanta Sinha	Mukul Kumar Gupta	6	22-11-2024	09
Ashish Kumar	Pushkar Singh	Pradeep Kumar	6	13-02-2023	08
Ashish Kumar	Pushkar Singh	Pradeep Kumar	7	20-12-2022	07
B.Rajkumar	K.Rajamouly	A.Sezhian	8	06-09-2016	06

1. SCOPE

The intent of this specification is to define the requirements of LED light fixtures and junction boxes suitable for installation in classified areas on offshore platforms.

2. CODES & STANDARDS

2.1. The following Codes and Standards form part of this specification:

BIS	-	Bureau of Indian Standards
IEC	-	International Electro technical Commission
NEC	-	National Electrical Code.
NEMA	-	National Electrical Manufacturer's Association.
BSI	-	British Standards Institution.
ANSI	-	American National Standards Institute.
API-RP-500/505	-	Classification of areas for electrical Installations at drilling rigs and production facilities
API-RP-14F /14FZ	-	Recommended practice for design and installation of electrical system for offshore production platform
ATEX	-	Atmosphere Explosible
IESNA	-	Illuminating Engineering Society of North America

3. SITE CONDITIONS

All the light fixtures and junction boxes shall be designed to withstand the conditions specified in the General Design Criteria or the particular specification, if specified therein.

4. SCOPE OF SUPPLY

The scope of supply through this specification includes:

1. Light fixtures suitable for Class 1 Division 1(NEC) or Zone 1 (IEC).
2. Light fixtures suitable for Class 1 Division 2(NEC) or Zone 2 (IEC).
3. Junction Boxes suitable for Class 1 Division 1(NEC) or Zone 1 (IEC).
4. Junction Boxes suitable for Class 1 Division 2(NEC) or Zone 2 (IEC).
5. Explosion proof cable glands, explosion proof plugs for equipment suitable for Class 1 Division 1(NEC) or Zone 1 (IEC).
6. Cable glands, lugs etc.
7. Clamps, Brackets etc. for fixture supports.

5. TECHNICAL REQUIREMENTS

5.1. General

5.1.1. All the light fixtures and junction boxes along with accessories to be used in hazardous area shall be certified by BASEEFA/UL/FM/CIMFR/IECEx/ ATEX or an Internationally Recognised Certification Agency for the area and service in which they could be used.

5.1.2. All the light fixtures and junction boxes along with accessories shall have weatherproof enclosures (IP-56/NEMA-4 or equivalent) and suitable for the hazard in which they are installed. The temperature class shall be at least T3 as per IEC, unless otherwise specified.

5.1.3. The glass/ polycarbonate used shall be clear and toughened type suitable for use under conditions involving exceptional risk of mechanical damage. The light fixtures shall have glass sealed into retaining ring, which, in turn, shall be secured to the body.

5.1.4. The lighting fixtures shall be suitable for mounting on poles/ceilings/columns. Suitable fastening devices such as Clamps/brackets etc required for installation, shall also be supplied.

5.1.5. All the lighting fixtures/junction boxes shall be provided with internal earthing terminal and external terminals as per IS/IEC 60079-0.

5.1.6. Special tools, if required, shall also be provided.

5.1.7. All the fixture nameplates shall bear the stamp of certifying agency.

5.1.8. The LED fixtures shall be high efficiency, durable, rugged, with minimum lumen depreciation and designed for ambient temperature of 45 deg C. The fixtures shall have been type tested in a NVLAP (National Voluntary Laboratory Accreditation Program, USA) accredited laboratory

(1) As per LM-79 (IESNA) for
- Total Luminous Flux
- Luminous Intensity Distribution
- Electrical Power Characteristics
- Luminous Efficacy (calculated)
- Color Characteristics

(2) As per LM-80 (IESNA) for lumen maintenance and LED lifetime projections shall be made using TM-21 method. In Situ Temperature Measurement Test (ISTMT) temperature shall be used while generating LM-80 report and TM-21 projection. The LEDs shall have 70% lumen maintenance at minimum 50,000 hours of operation. The LED fixture driver shall comply with IEC/FCC (Federal Communications Commission, USA) rules and regulations regarding electromagnetic radiation. Minimum power factor of LED fixtures shall be 0.9. Light colour shall be white and CRI shall be minimum 75. Fixture enclosure material shall be **UV resistance** Glass-fibre Reinforced Polyester (GRP) **as per IEC-60079-0** or Stainless steel (SS) or Copper free cast Aluminium alloy. **For Copper free cast Aluminium alloy, coating system shall be as per ISO 12944-6 for CX environment**. **The glass polyester material shall not get damaged due to ultra-violet rays over its life span.**Protective cover shall be made of polycarbonate or toughened glass. Offered LED fixtures should have been supplied to offshore installations.

9

5.2. Normal Light fixtures

5.2.1. These shall be suitable for operation on 240V, 1-Phase, 50 Hz, supply and shall be suitable for the classified area in which they are installed. Fixture shall have double side entry suitable for armoured copper cable complete with termination accessories. Spare plug shall be provided to block the unused entry. The terminals shall be anti-loosening non-sparking type and in adequate numbers to terminate two cables.

5.3. D.C. Emergency Light fixtures

Fixtures shall be suitable for use in Class 1 Division 1 or Zone 1 area. Fixtures shall have double side entry suitable for copper cable complete with flame proof termination accessories. Spare explosion proof plug shall be supplied to block unused entry. The terminal block shall be adequate to terminate two cables.

5.4. Junction Boxes

5.4.1. The junction boxes shall be of:

- Stainless steel (SS) **or UV resistance GRP as per IEC-60079-0,** increased Safety (Ex e) or non-sparking type (Ex n) type for Division-2 area.
- **UV resistance** GRP **as per IEC-60079-0** or Stainless Steel (SS) or cast metal aluminum alloy, Explosion proof type for Division-1 area.

9

9

- **Copper free cast Aluminium, coating system shall be as per ISO 12944-6 for CX environment and same shall be copper free. The glass polyester material shall not get damaged due to ultra-violet rays over its life span.**
- It shall be provided with cable termination accessories for copper cables. The minimum number of side entries shall be three.

5.4.2 All terminals for cable connection shall be anti-loosening type. An earthing terminal shall be provided inside the junction box. Sufficient space for accommodating specified numbers of cables and easy access to their terminals for termination purposes shall be provided.

5.4.3 Four lugs shall be provided for mounting of junction box on wall/steel structure.

5.5. Cable Glands and lugs

5.5.1. Explosion proof, double compression type, nickel/chromium plated brass cable glands shall be provided for all Class 1 Division 1 or Zone 1 equipment.

5.5.2. Double compression type nickel/chromium plated brass cable glands shall be provided for all Div. 2 or Zone 2 equipment.

5.5.3. The lugs provided shall be tinned copper crimping type.

6. TESTING AND INSPECTION

Testing and inspection of light fixtures and Junction boxes shall include but not necessarily be limited to the following:

- A visual inspection shall be made to ensure that the finishing and workmanship are up to the mark.
- Company reserves the right to witness the final testing and inspection. Prior intimation of at least shall be given to enable the Company to depute its representative to witness the test.

7. CERTIFICATION

(1) Photometric type test certificates by UL or NVLAP (National Voluntary Laboratory Accreditation Program, USA) accredited laboratory for the following shall be provided.

(a) LM-79 (IESNA) for

- Total Luminous Flux
- Luminous Intensity Distribution
- Electrical Power Characteristics
- Luminous Efficacy (calculated)
- Color Characteristics

(b) LM-80 (IESNA).

(2) IP/NEMA rating certificates issued by UL or FM or IECEX or ATEX.

(3) All the light fixtures and junction boxes offered or those with similar design & construction features, manufactured by same vendor:

- Shall have been type tested by an accredited authorized agency/lab.
- Shall be having current certification/approval/listing UL/FM/BASEEFA/ CIMFR/ ATEX/IECEX.

8. PACKING AND TRANSPORT

The offered equipment along-with their accessories shall be packed suitable for shipping to yard site, marine transport to offshore site. The packing shall ensure that there is no damage to the surface finish & product. The packaging shall have skid bottom for handling.

FUNCTIONAL SPECIFICATION

FOR

"Electric Motors"

Prepared / Revised By	Reviewed By	Approved By	Total No. of Pages	Date	Rev. No.
KL	PS	PK	9	23.12.2022	5
PK	KR	AS	5	21.03.2016	4

Table of Contents

1. SCOPE……3
2. APPLICABLE CODES, STANDARDS & REGULATIONS……3
3. FUNCTIONAL DESCRIPTION……..3
   3.1 Operating Conditions……..3
   3.2 Operation & Maintenance Philosophy……..4
4. TECHNICAL REQUIREMENTS……4
5. TEST AND INSPECTION……5
6. CERTIFICATION……5

1. SCOPE

This specification defines the functional requirements for the supply of Electric Motors for operations in offshore process platforms. The vendor shall submit full technical details of the equipment which meets the requirements detailed in this functional specification and data sheet.

2. APPLICABLE CODES, STANDARDS & REGULATIONS

As a minimum, all motors offered shall be designed, manufactured, and tested installed in accordance with the applicable provisions of the relevant National/ International Codes, Standards & Regulations.

The latest editions of the following Codes, Standards & Regulations are applicable, and motors need to be manufactured following one of the standards given below or their equivalent:

IS –12615 and other IS Codes (all codes as applicable) or IEC – 60034, 60092 (relevant parts)

IEC 60079

Painting System - Supplier's Standard, if not specified otherwise by the Company

Noise Level - As defined in FS 5002.
Vibration level- As specified in FS 5004.

3. FUNCTIONAL DESCRIPTION

3.1. Operating Conditions

Offered motor and all its accessories/components provided should be suitable for the environmental conditions specified elsewhere in the bid package and operating conditions required for the particular service.

3.2 Operation & Maintenance Philosophy

The operation & Maintenance Philosophy along with full details of all major components, which will be subject to planned maintenance/ replacement during the life of the equipment, shall be provided by the vendor.
All equipment components which require regular monitoring or maintenance shall be easily accessible by the operating personnel. Vendor shall furnish an effective maintenance layout for motor.
The equipment shall be designed such that all maintenance can be carried out with the minimum of special facilities

4. TECHNICAL REQUIREMENTS

4.1 Selection of motors to be used in hazardous area shall be based on the zone and ignition temperature of the hazardous gases. All motors to be used in hazardous area shall be certified by UL/FM/BASEEFA/ CIMFR/CCOE/ATEX/IECEx or equivalent international certifying agency.

4.2 Motors for Zone-1 (Division-1) area shall be either pressurized [Ex(p)] or flameproof / explosion-proof [Ex(d)] type. Motor for Zone-2 (Division-2) area shall be pressurized [Ex(p)] or flame-proof [Ex(d)] or non- sparking [Ex(n)] or increased safety [Ex(e)] type.

4.3 All motors for outdoor installation on offshore platform shall have ingress protection of IP 56 or IP 55 with canopy as per manufacturer standard design**,** under extremely harsh, windy and salt laden corrosive marine environment.

4.4 Unless otherwise specified, all motors shall be designed for DOL starting across full line voltage and suitable for starting under specified load conditions with 80% of the rated voltage at terminals.

4.5 All motors shall be adequately rated to be compatible with and to cater for the starting and running characteristics (viz. speed, torque, current, etc.) of the driven equipment. In the case of motor being used to drive a pump and the pump is required to be started with discharge valve open, the motor should be sized accordingly.

4.6 Motors rated 3.7 KW and above shall be provided with 240 Volts anti-condensation heater suitably sized and located to prevent condensation of moisture within the motor body during the period when motor is not running.

4.7 Motors rated above 160KW, categorized as High Voltage Motors, shall be fed from 6.6KV or 11KV (as applicable) 50 Hz supply while those rated 160 KW and below, categorized as Medium Voltage Motors, shall be fed from 415V 50 Hz supply.

.

4.8 All motors shall be suitable for-continuous operation at rated output under the following conditions –

a) At rated frequency with voltage variations of ±6% of the nominal value

b) At rated voltage with frequency variations of ±3 % of nominal value

c) Any combination of (a) & (b) above.

4.9 Motors shall be provided with class 'F' insulation with temp. rise limited to class 'B'. The permissible temperature rise above the specified ambient temperature shall be limited to those specified in IS - 12802 / IEC 60034-1 for class "B" insulation.

4.10 Insulated bearing for H.T. Motors or motors supplied with VFD

4.11 Factors like de-rating due to harmonics, loss in efficiency, temp. rise, long cables need to be considered for selection of motors to be powered by VFD.

5. TEST AND INSPECTION

Motors need to be tested and company reserves the right to witness final testing and inspection. Routine tests shall be conducted, and type test certificates shall be submitted by the vendor as mentioned in IS 12615 /IEC 60034.

7. CERTIFICATION

All offered motors or those of similar design and construction features manufactured by the same vendor –

- Shall have been type tested by an authorized testing agency/lab viz. CPRI, ERDA or any other accredited agencies.
- Shall be having current certification /approval /listing by UL/FM/BIS/ATEX/ IECEx etc.

ELECTRIC MOTOR DATA SHEET

DRIVEN EQUIPMENT NAME:	**TAG NO. :**
CLIENT	EQUIPMENT NO.
SERVICE	DATA SHEET NO.
PROJECT	P.O. NO.
PROJECT NO.	REVISION / DATE

DATA SHEET FOR SQUIRREL CAGE 3-PHASE INDUCTION MOTOR

1.0 OPERATING REQUIREMENTS & CONDITIONS

1.1	Specification No.	
1.2	Rating	--- KW
1.3	Insulation Class / Temp. rise	Class F/ Class B
1.4	Duty type	S1/ Other
1.5	Supply System	
1.6	Circuit Protection	ACB/MCCB/Fuse, --- Amps.
1.7	System Fault Level	--- KA for ---Secs.
1.8	Explosion hazards	Zone 1/ Zone 2/ Safe
1.9	Temp. Class	T-3
1.10	Enclosure Protection	*
1.11	Design Ambient	As per bid conditions

1.12	Method of cooling	TEFC/ CACA/ CACW/ Other
1.13	Starting Method	DOL/ Other
1.14	Max. Starting current	--- % FLC
1.15	Synchronous Speed	--- RPM
1.16	Direction of Rotation Looking from NDE	CW/CCW
1.17	Run up time	--- Seconds
1.18	Type of Mounting	Horizontal/Vertical/ Foot/ Flange/ Skirt
1.19	Colour	

NOTE : Package vendor to specify all outstanding operating conditions and requirements.

2.0 DATA TO BE FURNISHED BY MOTOR VENDOR

2.1	Manufacturer	
2.2	Works Address	
2.3	Certifying Authority	
2.4	Frame Ref.No.	
2.5	GA Drawing Ref.No.	
2.6	Dimensions in mm (LxBxH)	
2.7	Rating	--- KW
2.8	Full load speed	--- RPM
2.9	Full load current	--- A
2.10	Starting current	--- A, --- % of FLC
2.11	Efficiency (100%/ 75%/50% of FL)	

2.12	Power Factor(100%/ 75%/50% of FL)	
2.13	Power Factor (starting)	
2.14	Full load torque	--- Nm
2.15	Locked rotor/ Pull up/ Pull out torque (expressed as %age of FLT)	
2.16	Thermal Time Rating (T_e)	
2.17	Safe stall time (seconds)	Hot --- Cold ---
2.18	Thermal Time Constant (T_c)	
2.19	Insulation Class/ Temp. rise	
2.20	Winding Connection	STAR/DELTA
2.21	Heater Rating	--- W, 240 V AC, 50 Hz
2.22	Main Terminal Box Type	
2.23	Degree of Protection	*
2.24	Rotation looking from NDE	
2.25	Model/ Type	
2.26	Reference Standard	
2.27	Shaft	Standard/ Double End/ Extension
2.28	Bearing Type (DE/ NDE)	
2.29	Bearing Make & Ref. No. (DE/ NDE)	
2.30	Lubrication details	
2.31	Moment of Inertia, GD^2	--- Kgm^2

2.32	Weight - Motor/ Rotor	--- Kg, --- Kg
2.33	Noise Level	--- db
2.34	Drain/ Breather details	
2.35	Earth terminal details(Internal/External)	
2.36	Colour	
2.37	Anti- vibration features	
2.38	Purging Equipment details [only for Ex(p) motors]	

FUNCTIONAL SPECIFICATION FOR SELF CONTAINED EMERGENCY LUMINAIRE

PREPARED / REVISED BY	REVIEWED BY	APPROVED BY	TOTAL NO. OF PAGES	DATE	REV.
BR	KR	AS	4	06-09-2016	04
Ashish Kumar Sao	Ajanta Sinha	Mukul Kumar Gupta	5	22/11/2024	05

1. SCOPE

This specification covers the minimum requirements for self-contained emergency light fixtures to be used on offshore platforms.

2. CODES & STANDARDS:

2.1. The self contained emergency luminary assembly shall comply with the requirements of the latest revisions of relevant standards of:

BIS : Bureau of Indian Standards.
NEC : U.S. National Electrical Code.
NEMA: National Electrical Manufacturer's Association
BSI : British Standards Institution.
ANSI : American National Standards Institute
IEC : International Electro-technical Commission.
ATEX : Atmosphere Explosible

2.2. Any other recognised international codes or standards may be followed in lieu of above with prior approval of the Company.

3. SITE CONDITIONS:

All the luminaries shall be designed and tropicalised to withstand the site conditions specified in the General Design Criteria enclosed in the Bid Package.

4. SCOPE OF SUPPLY:

The scope of supply through this specification includes:

4.1. Self-contained emergency luminaire assembly suitable for use in Class I Div-1 or Zone 1 (Temp. class T3).

4.2. All hardware required for mounting and fastening of the assembly.

5. TECHNICAL REQUIREMENTS:

5.1. General:

The emergency luminaire shall be fluorescent or LED type. The fixture shall provide normal area lighting on offshore platforms and also provide emergency lighting in case of Loss of AC power. In the event of a power

failure the luminaire will automatically switch over to emergency light operation.

5.2. Included Equipment:

5.2.1. The fixture shall be weatherproof (IP-56/NEMA-4) and shall contain two 18/20 watt fluorescent tubes or equivalent LED along with necessary batteries, inverter/LED driver and rectifier for emergency operation. Necessary Indication shall be provided to indicate the status of battery charge.

5.2.2. The batteries provided shall be gas-tight nickel-cadmium type with a capacity to power the luminaire for at least 90 minutes continuously. The recharge period shall not exceed 24 hours.

5.2.3. Fixture enclosure material shall be UV resistance Glass-fibre Reinforced Polyester (GRP) as per IEC-60079-0 or Stainless steel (SS) or Copper free cast Aluminium alloy. For Copper free cast Aluminium alloy, coating system shall be as per ISO 12944-6 for CX environment. The glass polyester material shall not get damaged due to ultra-violet rays over its life span. 5

6. UTILITIES AVAILABLE:

Electric power: 240 volts ± 5%, 1 phase 50 Hertz ± 3%.

7. SAFETY:

Each fixture shall be provided with as a minimum two cable entries, two glands & one loose blocking plug.

8. TESTING AND INSPECTION:

Testing & inspection of the luminaire assembly shall include but not necessarily be limited to the following:

8.1. A visual inspection shall be made to ensure that the finishing & workmanship are up to the mark.

8.2. Company reserves the right to witness the final testing & inspection. Advance intimation of at least 20 days shall be given to enable the Company to depute its representative to witness the test.

9. SPARES:

9.1. Vendor shall furnish a separate priced list of recommended spares for two(2) years of normal operation and maintenance. Recommended spares shall take into account the related factors of system reliability, effect of down- time upon production, safety, and cost of parts and availability of equipment service facilities.

9.2. All spares furnished by the vendor shall be wrapped and packaged so that they could be preserved in original as new condition under the normal conditions of storage prevailing in India and shall be properly tagged and coded to facilitate future identification. They shall be packaged separately, clearly marked as "spare parts" and shipped along with the main equipment i.e. luminaire assembly. Packing lists shall be furnished so that the parts can be handled without uncrating if required.

10. WARRANTY:

Vendor shall have final and total responsibility for the design and performance of all equipments supplied under this specification. Warranty/Guarantee shall be as covered in Vol-I of Bid documents.

11. VENDOR DATA REQUIREMENTS:

11.1. Technical literature and drawings consisting of information regarding overall dimensions, weight, material of construction, mounting details etc. shall be provided. Details regarding batteries like make, type, capacity, year and month or year and week of manufacture etc shall also be provided.

11.2. Copies of type test certificates shall be provided.

11.3. Certificates showing the suitability to use in the hazardous area in which the luminaries are to be installed shall also be provided.

12. CERTIFICATION

All emergency luminaire assemblies offered or those of similar design and construction features, manufactured by the same vendor:

- **Shall have been type tested by an accredited authorized agency/lab.**
- **Shall be having current certification/approval/listing by UL/FM.**

13. PACKING & TRANSPORT:

5

The emergency luminary assemblies along with their accessories shall be shipped to site packed in wooden crates. They shall be wrapped with polythene sheets, before being placed in the crates to prevent damage to finish. Crates shall have skid bottom for handling.

FUNCTIONAL SPECIFICATION

FOR

ELECTRICAL POWER AND CONTROL CABLES

PREPARED / REVISED BY	REVIEWED BY	APPROVED BY	TOTAL NO. OF PAGES INCLUDING THIS PAGE	DATE	REV.
LNVR	HSM	RK	16	31-01-05	2
SRS	AS	HMG	15	19 / 02 / 08	3
PK	KR	AS	11	10 / 08 / 15	4
KL	AK	PL	11	24/01/2022	5

1.0 SCOPE

This Specification defines the minimum requirements for design, manufacture, supply and testing of electrical power and control cables for high voltage and low voltage systems and cable accessories for installation on the offshore process / well platforms.

2.0 CODES AND STANDARDS

2.1 Codes Standards and Regulations:

All cables, accessories and other components supplied, shall comply with the latest revisions of the applicable codes and standards.

IEC	International Electro technical Commission.
NEMA	National Electrical Manufacturers Association.
NEC	U.S. National Electrical Code
IEEE	Institute of Electrical and Electronics Engineers.
API	American Petroleum Institute.
B I S	Bureau of Indian Standards

Further the Contractor shall ensure all mandatory Indian statutory requirements are complied with.

2.2 Any other recognized International code or standard may be used in lieu of above, subject to approval of company.

3.0 SITE CODITION

All the cables and accessories shall be designed to withstand the conditions specified in the General Design Criteria enclosed elsewhere in the bid package.

4.0 SCOPE OF SUPPLY

The Scope of this specification includes the following items:

4.1 Flame / Fire retardant, low smoke, halogen free, heat and oil resistant, high voltage cables.

4.2 Flame / Fire retardant, low smoke, halogen free, heat and oil resistant, low voltage Power and Control cables.

4.3 Flame / Fire retardant and Fire resistant, low smoke, halogen free, mica glass tape insulated, heat and oil resistant, low voltage cables.

4.4 High voltage cable terminations and accessories.

5.0 GENERAL REQUIREMENT

5.1 Safety

5.1.1 Non-metallic materials, such as conductor insulations shall be non-hygroscopic, and nontoxic.

5.1.2 Materials that are highly persistent or toxic to the environment or potential Carcinogen such as asbestos, poly chlorinated bi-phenyls (PCBs), Mercury and the like shall not be used.

5.2 Materials, Workmanship and suitability:

5.2.1 All materials utilized in the construction of the cables shall be to the latest specifications, new and in current production. Should any material prove unsatisfactory, it will be rejected not withstanding any previous satisfactory examination or tests of similar material or of completed cables.

5.3 Cables and cable accessory shall be suitable for operations without periodic maintenance applied throughout the life span of the cable.

5.4 Units and information.

All quantities and dimensions shall be expressed in metric units. All information, manual, certificates, data and inscriptions shall be in the English language.

6.0 TECHNICAL REQUIREMENTS

6.1 General

6.1.1 The cable shall be new and in good condition and shall be suitable for layering and bunching in ladders, trays and ducts and flexible enough for easy termination using standard terminals.

6.1.2 All power and control cables shall be flame retardant, low smoke, halogen free type and oil resistant outer sheath suitable for installation on offshore oil and gas processing platforms.

6.1.3 For sheathing materials of cables, Oxygen Index shall not be less than 30 at 27 ± 2^0 C and temperature index shall be 250^0 C at 21% Oxygen, tested as per ASTM D2863.

6.1.4 For Flame Retardant cables, Flame spread (retardant) characteristics of cables shall be as per recommendations mentioned in IEC-60332-3 (category A).

6.1.5 Halogen free cables shall be compliant to properties as defined in IEC 60092 – 350.

6.1.6 Low smoke properties shall conform to recommendation in IEC 61034 – 2.

6.1.7 Sheathing material shall be halogen free elastomeric/ thermosetting SHF2.

6.1.8 Cables for safety and emergency systems as defined in electrical design criteria shall be fire resistant type in addition to the specifications at 6.1.2 above. Fire resistance characteristics shall be as per IEC 60331 – 11 & 60331 – 21 (withstand capacity of at least for 750^0 C for 90 mins).

6.2 Voltage Designation

Voltage designation for cables shall be as following in line with IEC – 60183 & 60092 – 353. However cables need to be supplied as per following rating

System Voltage (kV)	Voltage grading for cables and accessories [U_0 / U (U_m)] (as per IEC – 60183) (kV)
0.440	0.6 / 1.0 (1.2)
3.3	**3.6 / 6 (7.2)**
6.6	**6 / 10 (12)**
11	8.7 / 15 (17.5)

7.0 CABLE CONSTRUCTION

In addition to the technical requirements stated in the previous section, the constructional requirements specific to all the power and control cables as described below shall be followed. Sections applicable for particular voltage ranges are mentioned against those. Other sections are common for all voltage ranges.

7.1 Conductor

Conductor shall be annealed, circular, stranded tinned / metal coated copper, smoothly drawn, free from defect, complying with the requirement of IEC-60228.

The conductor class (min. class 2) shall be selected to obtain the desired bending radius as per clause no 7.9.

7.2 Conductor Insulation

Conductor insulation shall be extruded insulation made out of Cross linked compounds (EPR / HEPR / XLPE only) complying with the requirements of IEC–60502.

7.3 Internal Construction (for High Voltage Cables - 3.6 / 6 (7.2) kV and above)

7.3.1 Cables rated 3.6 / 6 (7.2) kV and above shall be provided with non-metallic extruded semi conducting compound screening, to be applied on top of a semi-conducting tape for conductor and extruded nonmetallic semiconducting layer in combination with a metal layer as insulation screening over each core as per IEC 60092-354. The dimensional, physical and electrical requirements of the metallic layer (metallic screen) shall be determined as per IEC 60092-354.

7.3.2 The fillers, binders and extruded inner covering shall be of non-hygroscopic material, shall be suitable for the operating temperature of the cable and compatible with the insulating material and shall be provided as per IEC 60092 – 354; the thickness of inner covering shall be according to IEC 60092 – 354 (for extruded). The inner covering shall be extruded cross-linked elastomeric halogen free compound (SHF 2).

7.4 Internal Construction (for Low Voltage Cables - 0.6 / 1.0 (1.2), 1.8 / 3 (3.6) kV).

For above mentioned voltages, cores of a multicore cable shall be laid up and the interstices filled up with non-hygroscopic fillers & extruded non-hygroscopic inner covering shall be provided as per IEC 60092 – 353. The material selected shall be compatible with cable components with which it is in contact and compatible with the operating temperature of the cable. A suitable binder is to be to be applied before application of the extruded inner covering. The thickness of extruded inner covering shall be according to IEC 60092–353. The inner covering shall be extruded cross-linked elastomeric halogen free compound (SHF 2).

7.5 Armouring

Armouring shall be selected to as to achieve the bending radius requirement of clause7.9.Multicore cables shall be mechanically protected with hot dipped galvanized steel wire braiding (GSWB) or galvanized round steel wire armouring (GSWA).Single core low voltage and high voltage cables shall be mechanically protected with tinned phosphor bronze wire braiding (PBWB) or hard drawn aluminium round wire armouring which shall be applied over the inner covering to confirm to the requirements of international standards. In cases where the steel armour layer is required to comply with a minimum conductance, it is permissible to include sufficient copper or tinned copper wires in the armour layer to ensure compliance. The armour of single-core cables for use on a.c. circuits shall consist of non-magnetic material. In special cases, for instance when the cables are used on d.c. circuits, magnetic materials can also be used.

7.6 Outer Sheath

The outer / over sheath shall be heat and oil resistant, suitable for installation in an offshore oil and gas processing platform. Material for outer sheath shall be cross-linked elastomeric halogen free compound (SHF 2) extruded in one or more closely adherent layers as per IEC 60092-350.

Minimum thickness of outer sheath is to be as per IEC 60092-353/ 354 as per voltage rating of cable. The thickness at any point shall satisfy the prescriptions given in 4.9.3 of IEC 60092- 350.

Outer sheath marking shall be printed type as per sec 4.2, IEC60092-354 & section 4.1.3, IEC 60092-350.

7.7 Fire Resistant Cables

7.7.1 In addition to the technical requirements stated in the previous sections, the following requirements are specific to Fire Resistant cables.

7.7.2 Fire resistance cables shall be in compliance with IEC 60331-11 & 60331 - 21 and shall have a Heat barrier of glass mica tape lapped in double layer shall be provided over the conductor, before the insulation.

7.8 Colour Coding

7.8.1 Cable outer sheaths shall be permanently colour coded such that colours do not deteriorate with age or fade with exposure to direct sunlight.

7.8.2 Cable shall be coded as per the colours indicated below. Any alternate colour coding shall need prior approval by the company.

7.8.3 Cable Colour Coding

1	High Voltage Power (greater than 1 KV)	:	Red / Black (as per IEC 60992 – 353 / 354 respectively)
2	Low Voltage Power & Control (equal to or less than 1 KV)	:	Black
3	Earth	:	Green/Yellow

7.8.4 Cable cores shall be identified either by colors or by numbers. Color coding shall be as following:

1	Number of cores (1 core)	:	Black
2	Number of cores (2cores + Earth)	:	Black & Red + Green/Yellow
3	Number of cores (3 cores + Earth)	:	Red, Yellow & Blue + Green/Yellow
4	Number of cores (4 cores + Earth)	:	Red, Yellow, Blue & Black + Green/Yellow
5	Control cables: Multi-core + Earth	:	White with Black numbers + Green/Yellow

Individual cores of multi-core power, control cables, if identified by numbers, shall be done as per sec. 4.2.3.3 and Annex. B, IEC 60092 – 353.

7.9 Bending Radius

Cables shall be flexible and suitable for installation with the minimum bending radius, appropriate for the type of cable supplied and the bending radius shall be finalized based on installation contractor's requirement.

8. Cable Drums

8.1 Cables shall be dispatched on suitable barrel diameter, securely battened, with takeoff ends of the cable brought to the outside of the drum (either wooden or metallic) and fully protected against mechanical damage.

8.2 Besides customary markings as per any prevalent standard / code, each cable drum shall be fitted with a stainless steel or equivalent corrosion resistant label. The label shall be fixed to the outside of each flange, engraved with the following information:

i) Cable Manufacturer's name
ii) Cable type number
iii) No. of cores and cable cross sectional area in mm and core construction/stranding e.g. 3C+E 4mm2, (7/0.85)
iv) Voltage grade
v) Standard(s)
vi) Purchase order number/item number
vii) Cable length (in metres)
viii) Net and gross weights (kg)

ix) Date of manufacture.

9. Cable Accessories

9.1 Cable termination kits for use on high voltage systems shall be suitable for the type of cables offered as per this specification. The terminations shall be supplied in kit form. The terminations kit shall include all insulating and sealing materials apart from conductor fittings and consumable items. The Contractor shall ensure that installation instructions are included in each kit.

9.2 Cable termination kits shall be provided with semi conductive de-stressing appropriate for the working voltage.

9.3 The cable terminations kits shall be suitable for terminations of the cables to an indoor-switchgear, weatherproof enclosure, outdoor transformers or hazardous area motor terminal box, as the case may be. The terminating kits shall be heat/shrinkable sleeve type.

9.4 The Contractor shall provide type test certificates for cable termination kits as per IS 13573 from the manufacturers of these kits for review by company.

10. INSPECTION AND TESTING

10.1 General

10.1.1 The cable shall be tested and inspected at the manufacturer's works, or at a recognized testing facility. The Contractor shall ensure all the test equipment necessary to test the cables is provided by the manufacturer. Test certificates for all tests shall be provided to the Company, immediately on completion of tests performed. All tests shall be witnessed by the Company or its authorized representative.

10.1.2 Company shall be advised at least (4) weeks in advance of the scheduled date of each test and again 20 days prior to the actual test.

10.1.3 The Contractor shall ensure detailed records and log sheets regarding the results of the tests and certification are furnished for review.

10.1.4 The Contractor shall furnish all necessary information concerning the supply to the Company's inspector or representative. The inspector shall have free access to the manufacturer's works for the purpose of inspecting the process of manufacture in all the stages and will have the authority to reject any material which appears to be unsuitable or of unsatisfactory quality.

10.2 Testing

10.2.1 All LV Electrical cables shall be tested in compliance with the IEC standard 60092-353 and HV cables shall be tested in compliance with the IEC standard 60092-354. In case cable is tested as per other international standards (IEEE, BIS, NEMA or NEC), the tests shall be either equivalent to IEC or more stringent. After installation, tests will be carried out for cables with lower voltage rating in accordance with IEC 60502-1 and for cables with higher voltage rating, in accordance with IEC 60502-2.

10.2.2 For type tests, valid type test certificates certified by any reputed international agency are acceptable in lieu of tests. Type test certificates must be submitted to company representative / inspector during inspection.

10.3 Sealing

Immediately after electrical tests, the ends of the cable shall be sealed with heat shrink caps to prevent the ingress of moisture.

11.0 CERTIFICATION

All cables and cable accessories of similar design and construction features manufactured by the same Vendor:

a) Shall have been type tested by an authorized testing agency/lab viz. CPRI, ERDA etc.

b) Shall be having current certification/approval/listing by UL/FM/ATEX/IECEx etc.

FUNCTIONAL SPECIFICATION FOR EXPLOSION PROOF CONTROL STATION

Prepared / Revised By	Reviewed By	Approved By	Total No. of Pages	Date	Rev. No.
			07		1
AKS	NNJ	PK	07	16.02.2021	2
Ashish Kumar Sao	Ajanta Sinha	Mukul Kumar Gupta	07	29.10.2024	3

Table of Contents

1 SCOPE.....3

2 CODES & STANDARDS 3

3 SITE CONDITIONS.....3

4 SCOPE OF SUPPLY….....3

5 TECHNICAL REQUIREMENTS….....4

6 TESTING AND INSPECTION ….....5

7 SPARES….....6

8 WARRANTY….....6

9 VENDOR DATA REQUIREMENT.....6

10 DELETED.....6

11 CERTIFICATION 7

12 PACKING AND TRANSPORT ….....7

13 DELETED…….....7

1.0 SCOPE:

The intent of this specification is to define the minimum requirements for explosion proof control stations / push button stations to be located near the motors on the offshore platforms.

2.0 CODES AND STANDARDS:

2.1 The following codes and standards shall form a part of this specification:

NEC	-	National Electrical Code.
NEMA	-	National Electrical Manufacturer's Association.
BSI	-	British Standards Institution.
API-RP-14F	-	Recommended practice for design and installation of Electrical system for offshore production platform.
API-RP-500	-	Classification of areas for electrical installations at drilling rigs and production facilities.
BIS	-	Bureau of Indian Standard

2.2 Any other recognized international code or standard may be used in lieu of above with prior approval of the Company.

3.0 SITE CONDITIONS:

All materials shall be selected and finished to resist/withstand the site conditions Specified in General Design Criteria enclosed in the Bid Package.

4.0 SCOPE OF SUPPLY:

The scope of supply includes.

4.1 Explosion proof control stations / push button stations of various types.

4.2 Cable lugs & explosion proof double compression type nickel chromium plated brass cable glands.

5.0 TECHNICAL REQUIREMENTS:

5.1 The control stations / push button stations shall be explosion proof and weather-proof suitable for operation in class-1, Division-2, Group-D or Zone 1, Group II A/II B, and temperature Class T-3 (200ºC). Their enclosures shall be explosion-proof to NEMA-7 and weather-proof to NEMA- 4 (IP-56) or equivalent.

5.2 They shall be made up of UV resistance Glass-fibre Reinforced Polyester (GRP) as per IEC-60079-0 or Stainless steel (SS) or Copper free cast Aluminium alloy with requisite terminals and explosion-proof cable termination accessories suitable for cable as per FS 4011. **For Copper free cast Aluminium alloy, coating system shall be as per ISO 12944-6 for CX environment.** The glass polyester material shall not get damaged due to ultra-violet rays over its life span.

5.3 Contact for push buttons shall be rated for 6 Amps. At 240VAC. AC-11 duty and 4.0 Amps at 11OV D.C., DC-13 duty.

5.4 Wherever start-stop push buttons are used, the start push button shall be Momentary close type while the 'Stop' push button shall be stay put type and lockable in pressed condition. The colours of push buttons shall be as follows:

Start: Green (Shrouded)

Stop: Red (Mushroom head type)

5.5 Auto - Manual / local - Remote Selector switches shall be knob type having Stay-put type contacts of rating same as that of push buttons. Auto - Manual / Local - Remote switch and start - stop pushbuttons, wherever required, shall be housed in a common enclosure.

5.6 The control stations shall have four lugs for mounting on the pre-fabricated available supports. The lugs shall be off-set so that the rear surface of the Unit stays at least 5 mm away from the surfaces. On lugs, two holes shall be round and two oblong to facilitate correct positioning of the control station.

5.7 Desired number of terminals plus 10% spare shall be provided for connection of external cable leads of copper conductor. Necessary cable termination

accessories shall be supplied with each control station. The cable entry shall be from the bottom. These entries shall be properly plugged to protect the equipment during transit.

5.8 1 No. external Earth terminal shall be provided on the body.

5.9 A nameplate indicating the equipment to be operated shall be provided for each control station. The particulars of the nameplate will be furnished later. Nameplates shall be of stainless-steel having letters of a minimum height of 5 mm.

5.10 Warning inscription "ISOLATE ELSEWHERE BEFORE OPENING" shall be prominently and indelibly displayed on the top cover of control stations.

5.11 Ammeters shall invariably be incorporated in the control station for motors irrespective of their KW ratings and sizes. Ammeter scale shall be suitable to read both rated current and starting current.

5.12 A red mark shall be provided at the full load current of the motor, the values of which will be furnished along with the Purchase Specification to the successful vendor.

5.13 The control stations shall be tested and certified as defined in Electrical Design Criteria enclosed in the Bid Package. Each equipment shall have certification mark on its nameplate.

5.14 All control stations shall be provided with canopy of suitable material and proper size for protections against rain, fog etc.

5.15 All hardware such as nuts, bolts, washers etc. shall be Cadmium / stainless steel plated.

6 TESTING AND INSPECTION:

6.1 Testing and inspection of Control Station / Push Button station shall include, but not necessarily be limited to the following:

6.1.1 A quantitative check shall be made to ensure that all items in specified quantity are present according to the order and the packing list.

6.1.2 A visual inspection shall be made to ensure that good workmanship and practices were adopted during fabrication and assembly.

6.2 DELETED

6.3 All type test certificates including explosion-proof certificate shall be furnished along with the offer.

7 SPARES:

7.1 Vendor shall recommend and provide spare parts needed for start-up. In addition, vendor shall also furnish a separate price list of recommended spares for two (2) years of normal operation and maintenance.

7.2 Recommended spares shall take into account related factors for system reliability, effect of downtime upon production, safety, cost of parts and availability of equipment service facilities.

7.3 All spares furnished by vendor shall be wrapped and packaged so that they could be preserve in original as new condition under the normal conditions of storage prevailing in India and shall be properly tagged and coded to facilitate future identification. They shall be packaged separately, clearly marked as "Spare Parts", and shipped along with the control / push button station. Packing lists shall be furnished so that the parts can be handled without uncrating, if required.

8 WARRANTY:

Vendor shall have final and total responsibility for the design and performance of All the Control Stations / Push Button Stations supplied under this specification. Vendor shall warrant them for their performance in accordance with this Specification.

9 VENDOR DATA REQUIREMENT:

Vendor shall furnish data for the supplied item-

1. Interconnection Drawing.
2. Test Certificates.
3. Support Drawing.
4. Other Relevant Data.

10 DELETED

11 CERTIFICATION:

All Control Stations / Push Button Stations offered or those of similar design and Construction features manufactured by the same vendor:

- Shall have been type tested by accredited laboratory / Institution.
- Shall have been in continuous satisfactory service in offshore for a minimum period two years,
- Shall be having current certification / approval / listing UL / FM /ATEX / IECEX / CPRI OR ERDA.

12 PACKING AND TRANSPORT:

The control station / push button stations along with their accessories shall be shipped to Site packed in wooden crates. They shall be wrapped with polythene Sheets, before being placed in the crates to prevent damage to finish. Crates shall have skid bottom for handling.

13 DELETED

FUNCTIONAL SPECIFICATION

FOR

"LV SWITCHGEAR ASSEMBLY"

PREPARED / REVISED BY	REVIEWED BY	APPROVED BY	TOTAL NO. OF PAGES	DATE	REV.
PK	KR	AS	25	27/11/2013	5
AK,AKS	NNJ	PK	21	03/09/2021	6

CONTENT

1. SCOPE 3
2. CODES & STANDARDS 3
3. SITE CONDITIONS 3
4. SCOPE OF SUPPLY 3
5. TECHNICAL REQUIREMENTS 4
5.1. DESIGN & FABRICATION REQUIREMENTS 4
5.2. BUS BARS 6
5.3. WIRING AND TERMINALS 7
5.4. EARTHING 7
5.5. NAME PLATE 8
5.6. PAINTING 8
5.7. SPECIFIC REQUIREMENTS OF AIR CIRCUIT BREAKERS PANELS 9
5.7.3. Cable compartment 9
5.7.4. Circuit Breaker Compartment 9
5.7.5. Interlocks…… 10
5.8. SPECIFIC REQUIREMENT OF DRAWOUT MODULE PANELS 10
5.9. SWITCHGEAR MODULES 12
5.10. SWITCHBOARD COMPONENTS 12
5.10.2. Contactors…… 14
5.10.3. Thermal Overload Relay 14
5.10.4. Moulded Case Circuit Breakers (MCCBs) 14
5.10.5. Relays…….. 15
5.10.6. Instrument Transformers (CTs/PTs) 15
5.10.7. Measuring Instruments 16
5.10.8. Control Switches 16
5.10.9. Push Buttons….. 16
5.10.10. Indicating Lamps… 16
5.10.11. Auxiliary Relays/Contactors 16
5.10.12. Timers…… 16
5.11. BUS DUCT 16
6. TESTING AND INSPECTION 18
7. VENDOR DATA REQUIREMENTS 19
8. CERTIFICATION 20
9. PACKING AND TRANSPORTATION 20

1.SCOPE

This specification defines the minimum requirements for design, manufacture, testing and supply of LV indoor, metal clad, switchgear panels comprising of air circuit breakers (ACBs), moulded case circuit breakers (MCCBs), motor starter units, contactors, relays etc. and all other necessary auxiliary devices to form rigid, dead front, free standing switchgear assemblies.

2. CODES & STANDARDS

2.1. All equipment supplied shall comply with the requirements of latest revision of the relevant standards of :

BIS	-	Bureau of Indian Standards.
IEC	-	International Electro-technical Commission.
BSI	-	British Standards Institution.
NEMA	-	National Electrical Manufacturers Association.
NEC	-	U.S. National Electrical Code.
IEEE	-	Institute of Electrical & Electronics Engineers.
API	-	American Petroleum Institute.

2.2. Any other recognised International Code or Standard may be followed in lieu of above with prior approval of the Company.

3. SITE CONDITIONS

The LV switchgear assemblies shall be designed for indoor installation on an offshore location. Site conditions are specified in General Design Criteria enclosed in the bid package.

4. SCOPE OF SUPPLY

The scope of supply includes, but is not limited to, the following:

i) LV Power Control Centers (PCCs) generally comprising of Air Circuit Beaker feeders and MCCB feeders.

ii) LV Motor Control Centers (MCCs) Comprising of MCCB feeders, motor starter unit feeders with MCCB, contactor, bimetal relay etc.

iii) LV Power and Motor Control Centers (PMCCs) having any combination of PCCs & MCCs listed above.

iv) DELETED.

v) LV bus duct as required.

5. TECHNICAL REQUIREMENTS

5.1. DESIGN & FABRICATION REQUIREMENTS

5.1.1. LV switchboard shall be metal enclosed fully drawout, free standing, floor mounting, compartmentalised, modular, intelligent type suitable for indoor installation. The switchboard shall be dust and vermin proof and shall provide a degree of protection not less than IP – 41 or equivalent.

5.1.2. The switchboard shall consist of vertical panels of uniform height in single line up.

5.1.3. It shall be possible to extend the switchboards, in either direction in future. Ends of bus bars shall be suitably drilled for this purpose. Panels at extreme ends shall have openings which shall be covered with plates screwed to the panel. Details of drilled holes in bus bar and openings in the panels provided for future extension shall be clearly shown in the vendor drawings.

5.1.4. The switchboard shall be designed to ensure maximum safety during operation, inspection, connection of cables, relocation of outgoing circuits and maintenance, with the bus bar system energized and without taking any special precautions. Means shall be provided to prevent shorting of power and / or control terminals due to accidental dropping of maintenance tools etc. inside the switchboard. Checking and removal of components shall be possible without disturbing adjacent equipment. All auxiliary equipment should be easily accessible.

5.1.5. All identical equipment and corresponding parts shall be fully interchangeable without any need of structural modification.

5.1.6. The frame, of individual vertical panels shall be fabricated using pressed and shaped cold rolled sheet steel of adequate thickness or by using suitable mild steel structural sections. The sheet steel used for panel shall be of minimum (2mm) 14SWG CRCA except that the doors & covers may be made of (1.6mm) 16 SWG CRCA. Or Aluminium Zinc or Galvanized steel (GSM275) or torsion-resistant steel. Wherever required stiffeners shall be provided to increase stiffness of large size doors & covers.

5.1.7. All openings, covers and doors shall be provided with neoprene / EPDM / polyurethane or equivalent Gaskets. Removable blanking plates shall be provided to cover the openings in the event of withdrawing the feeder modules. Number of blanking plates shall be 20% of each module size with a minimum of one number.

5.1.8. All hardware shall be corrosion resistant. All joints and connections of the panel members shall be made by zinc passivated /cadmium high quality nuts and star washers.

5.1.9. Suitable removable type lifting hooks and / or jacking pads shall be provided on each panel or shipping section for ease of lifting of switchboard. These hooks when removed shall not leave any opening in the panels.

5.1.10. All power and control cables shall be terminated through double compression nickel plated brass cable glands. All cable glands and tinned copper crimping type cable lugs for all power and control cables shall be in vendor's scope of supply. Panels shall be suitable for bottom entry of cables unless otherwise specified.

5.1.11. Non-magnetic cable gland plates shall be provided for termination of single core cables.

5.1.12. The switchboard shall be formed using distinct vertical panels each comprising of following compartments:

i) A metal enclosed horizontal bus bar compartment running horizontally at Top/Rear

ii) Individual feeder modules in multitier mode.

iii) Cable termination compartment.

5.1.13. Metal sheets shall be provided between two adjacent vertical panels running up to full useful height of the switchboard.

5.1.14. MCC shall be of single/double front execution as specified in data sheet. Circuit breaker panels shall be in single front execution only. Motor starter and MCCB modules accommodated at front and rear of incomer and bus coupler panel are not acceptable. Also vacant space on incomer and bus' coupler panel shall not be used for mounting the motor starter and MCCB modules. Access to all operating devices shall be from the front of the switchboard.

5.1.15. All metering and protection equipment associated with a particular circuit shall be housed in separate and independent compartment earmarked for that particular circuit and in the fixed portion of the vertical panel in' case of breaker panels.

5.1.16. All auxiliary devices for control, indication, measurement and protection such as push buttons, control and selector switches, and indicating lamps, ammeters, voltmeters, KWH meters and protective relays shall be mounted on the front side of the respective compartment. The design shall be such that unless required for maintenance/ inspection purposes, all power on/off or start / stop and relay reset operations shall be performed without opening the panel door.,

5.1.17. The switchboard panels shall be provided with space heaters to prevent moisture condensation.

The space heater with porcelain connectors shall be located at the bottom of each panel and shall be supplied from 240 V AC auxiliary bus for space heater. The space heater shall be provided with a thermostat having variable setting of 30-70^{0}C and MCB of adequate rating.

5.1.18. LV Switchboard shall be provided with Condition Monitoring System through wireless /wired sensors for Thermal & Humidity monitoring.

5.2. BUS BARS

5.2.1. Busbars shall be of high conductivity copper supported on insulators made of non-hygroscopic, non-inflammable material with tracking index equal to or more than that defined in IEC/lS. The main busbars shall have uniform current ratings throughout their length as - specified in data sheet/job specification. The current rating of the neutral shall be half that of the phase busbars. Removable neutral links shall be provided on feeders to permit isolation of the neutral bus bar.

5.2.2. Both horizontal and vertical bus bars, bus joints and supports shall be capable of withstanding dynamic and thermal stresses resulting from peak short circuit current. Only zinc passivated or cadmium plated high tensile strength steel bolts, nuts and washers shall be used for all bus bar joints and supports. The short circuit capacity of the neutral bus bars shall be in line with applicable IS/IEC.

5.2.3. The current rating as defined for switchboard and components in data sheet specification are for design ambient temperature at site conditions and for being inside the cubicle at fully loaded condition. The vendor shall suitably de rate the nominal rating to suit the above condition.

5.2.4. All bus bars shall be insulated with heat shrunk FRLS Zero Halogen sleeves of 1.1KV grade. Red, yellow and blue colour shall be used for phase bus bars and black colour shall be used for neutral bus bars.

5.2.5. The bus bars shall be arranged and supported to ensure that under no circumstances, including three phase short circuit conditions, can the clearances from earthed metal work or other conductors be less than as specified in IEC 60947.

5.2.6. Interconnections between the main bus bars and individual units shall be made by using vertical Tinned copper bus bars of adequate rating. These vertical bus bars shall be either in separate compartment or encapsulated with fire retardant material with complete phase segregation. Vertical bus bars shall be of uniform cross section.

5.2.7. Auxiliary bus shall be provided for following applications. Exact number of bus shall depend on various controls, metering and auxiliary power distribution requirement.

i.Panel space heater supply and motor space heater supply.

ii.Control supply for breaker tripping, closing and indication circuits.

iii.Control supply for breaker spring charging motors, motor starter control and indication circuit.

iv. AC potential supply for energy meters, voltage operated relays etc.

Tee-off connectors shall be used for distributing auxiliary supply to each vertical panel. Rubber grommets shall be used for all wire entries to make the entries dust and vermin proof. Isolating links/ fish plates shall be provided between two auxiliary bus sections.

Provision to hook up of external DC control supply and external 240V space heater supply to be provided either in bus PT panel or bus coupler panel.

5.3. WIRING AND TERMINALS

5.3.1. Inside the switchboards the wiring for power, control, signaling, protection and instrument circuits shall be done with flame retardant zero halogen insulated copper conductors. The insulation grade for these wires shall be 600 volts grade. All control wiring shall preferably be enclosed in FRLS slotted ducts and neatly bunched together. The wiring ducts shall be sized to provide 30% spare capacity.

5.3.2. FRLS zero halogen insulated copper conductor & or of cross section 1.5 mm2 shall normally be used for control circuit wiring and 2.5 mm2 shall be used for CT circuits. Shorting links/suitable shorting arrangement for shorting CT secondary shall be provided.

5.3.3. Pre printed sleeve type ferrules shall be fitted to both ends of all wires. Ferrules shall be white insulating material with black numbers and with glossy finish to prevent adhesion of dirt. They shall not be damaged by moisture or oil and shall be permanently marked. Clip on ferrules shall not be used.

5.3.4. A minimum of 10 % spare terminals shall be provided on each terminal block. Conductors shall be terminated with adequately sized compression type lugs. Clamp type terminal for direct conductor termination shall be acceptable for wires up to 10 mm^2 size and bolted type terminals with crimping type copper lugs shall be provided for all outgoing cable connections larger than 10 mm^2.

5.4. EARTHING

All vertical panels shall be connected to a tinned copper earth bus bar running throughout the length

of the switchboard. The earth bus size shall be, minimum 150% of the values derived from the designed consideration, tinned copper. All doors and movable parts shall be earthed using flexible copper connections to the fixed frame of the switchboard. Provision shall be made to connect the earthing bus bar to the platform earthing grid at two ends. All non-current carrying metallic parts of the mounted equipment shall be earthed. Minimum 4 nos, 10 mm diameter bolts with nuts shall be provided on the earth bus for termination of fourth core of cable per vertical panel.

5.5. NAME PLATE

A nameplate with the switchboard designation shall be fixed at the top of the central panel. A separate nameplate giving details for each feeder compartment of all vertical panels shall be provided.

Nameplate shall be provided for each equipment (lamps, push buttons, switches, relays, auxiliary contactors, fuses etc.) mounted in the switchboard. Special warning plates shall be provided on removable covers or doors giving access to cable terminals and busbars. Special warning labels shall be provided inside the switchboards also, wherever considered necessary. Identification tags shall be provided inside the panels matching with those shown on the circuit diagram.

Engraved nameplates shall preferably be of 3- ply (Black - White - Black) lamicoid sheets or anodized aluminium. However back engraved perspex sheet nameplates may also be acceptable. Engraving shall be done with square / vee groove cutters. Nameplates shall be fastened by screws and not by adhesives.

The name plates for feeder compartments shall be in two parts. One part shall have necessary details pertaining to the compartments number of vertical panel of the switchboards. The other parts shall be removable and shall contain all details regarding the feeder number for drives/equipment controlled, by the- particular module as per approved single line diagram. Blank name plates shall be provided for all spare and vacant modules.

5.6. PAINTING

All metal surfaces shall be thoroughly cleaned and degreased to remove mill scale, rust, grease and dirt. Fabricated structures shall be pickled and then rinsed to remove any trace of acid. The under surface shall be prepared by applying a coat of made free from all imperfections before undertaking the finishing coat. After preparation of the under surface, the switchboard shall be spray painted with two coats of epoxy based final paint or shall be powder coated. Colour shade of final paint shall be as per manufacturer standard unless specified other wise. Colour uniformity of all panels in the switchgear shall be maintained. The finished panels shall be dried in ovens in dust free atmosphere. Panel finish shall be free from imperfections like pinholes, orange peels, runoff paint etc. Final touch up to the switchgear assembly shall be carried out at site with original paint.

All unpainted steel parts shall be cadmium plated or suitably treated to prevent rust formation. If these parts are moving elements then they shall be greased. In general painting shall be in accordance with Specification-'Protective Coating 2005'.

5.7. SPECIFIC REQUIREMENTS OF AIR CIRCUIT BREAKERS PANELS

5.7.1. The breaker panels shall have distinct bus bar, breaker and cable compartments. The design of each compartment shall be such as to prevent movement of vermin from a particular compartment to any other compartment of the panel when the breaker is withdrawn and compartment door is closed. In order to minimise accidental access and avoid accidents due to falling tools, all the outgoing links shall be shrouded.

5.7.2. Outgoing ACBs can be mounted in a maximum of two tier execution while the incoming/bus.coupler ACBs shall be in single tier execution only. All meters and protection relays associated with a particular breaker shall preferably be mounted on the same panel front.

5.7.3. Cable compartment

a) Separate compartment totally enclosed from all sides shall be provided for cable termination. Access to cables shall be provided after opening the cabling compartment door. The incoming/ outgoing cable termination shall be staggered for each circuit and barriers of sheet steel or insulating material shall be provided between terminations of two circuits' such that maintenance on one circuit could be carried out while the other circuit is live. Suitable clamping arrangements shall be provided for cables and cable termination. Terminal blocks shall not be used for supporting the cables.

b) The incoming supply for PCC/ PMCC panels shall be through top entry bus ducts or through bottom entry single core or multi core copper conductor FRLS cables, unless specified otherwise. The outgoing cables shall have bottom entry, unless specified otherwise. The cable terminations shall be suitably sized for receiving specified number of cables per termination and provision shall be made for terminating each outgoing cable with a separate bolted connection. In case the total number of cables entering a particular panel can not be accommodated in the cabling compartment of PCC panels an extension panel shall be added to the cabling compartment for accommodating extra cables.

5.7.4. Circuit Breaker Compartment

a) The circuit breaker compartment shall be fully draw out, i.e bus side and outgoing power and control connections shall be through draw out contacts. Suitable guides shall be provided to facilitate easy withdrawal of the circuit breaker. All identical feeder compartments shall be interchangeable.

b) The current transformers for the ammeter / protection circuits shall be mounted on the fixed portion of the compartment. However, current transformers associated with built in releases may be mounted on the breaker trolley. All terminals except wiping/sliding type control terminals shall be shrouded with plastic covers to prevent accidental contact. For direct termination - clip on shrouded type terminals shall be provided.

There shall be three positions for the draw out trolley viz:

i. Full in or Service position - In this position both power and control circuits shall be connected. This shall be the normal operating position of the circuit breaker.

ii. Test position - The power contacts shall be disconnected in this position but the control connections shall not be disturbed, it shall be possible to close and trip the breakers in this position.

iii. Full out Position - both power and control circuits shall be disconnected in this position and breaker removed from the cubicle.

The circuit breaker shall be lockable in "service" and "test" positions. Safety shutters shall be provided when the breaker is in withdrawn/drawout position. The earth connection must remain connected in "Test" position. Earthing of the unit shall be done with a "pin" or with scrapping earth connections. The earth connection shall make before the main power / control contacts make and break after the power /control contacts are disconnected. Earthing connection through a plug and socket connection shall not be acceptable.

5.7.5. Interlocks

Following interlocks shall be provided:

a) Compartment doors shall be interlocked against opening when breaker is in Service or Test condition. However, it shall be possible to defeat this interlock for inspection purposes

b) It shall not be possible to push "in" a drawn out circuit breaker in closed condition or withdraw a circuit breaker in closed condition.

c) It shall be possible to operate a circuit breaker only in the defined "Full in" or "Service" and "Test' position inside the panel. It shall not be possible to operate the breaker in intermediate- positions while inserting or withdrawing circuit breaker.

d) Any unused circuit breaker compartment shall be fully equipped and provided with compartment door, vertical busbars and control terminals/ wiring etc. such that the same could be used for housing outgoing breakers in future without any modifications to the panel.

5.8. SPECIFIC REQUIREMENT OF DRAWOUT MODULE PANELS

5.8.1. The design of drawout feeder modules shall not change for single front or double front execution. Separate vertical bus bars shall be provided for each front side modules. All identical feeder modules shall be interchangeable.

5.8.2. Each vertical panel shall have a separate cable alley. The width of this cable alley shall be sufficient to accommodate all the cables and shall have free access for cable terminations and in any case shall not be less than 150mm minimum. Cable alleys shall be provided with suitable doors. Sheet steel barriers shall be provided between individual compartments and cable alley. This barrier shall be provided with opening for power and control connections and it shall be possible to safely carryout maintenance work on cable connections to anyone circuit in the cable alley with the busbars and the adjacent circuits live. Maintenance and connection of cables to any modules shall be possible without having to take out the modules from its position from the panel.

5.8.3. The outgoing feeder trolleys shall be fully drawout and shall have the following features.

i. It shall be possible to withdraw the trolley without having to unbolt or unscrew any power and control connections to the equipment mounted on the withdraw-able trolley.
.

However, outgoing modules having size more than half of the useful vertical height of the panel may be in mixed combination of drawout /fixed type. Control supply transformer modules with burden higher than 2.5KVA may be in fixed execution.

5.8.4. Various compartment sizes in a vertical panel shall be multiples of a basic dimension. Vertical bus bars shall be pre-drilled at regular intervals for complete flexibility for changes in size of modules.

5.8.5. The trolley withdrawal shall be by means of crank and screw arrangement. Alternatively movement on guided rollers may also be acceptable. Plug in operation shall be independent of manual force. For drawout type feeders of size equal to or greater than half the useful vertical height of panel, positive clamping arrangement shall be provided on the top portion of the trolley in addition to clamping arrangement at the bottom, to ensure all round positive pressure on the power: drawout contacts once the trolley is plugged in . Power drawout contacts shall preferably be located towards the bottom portion of each trolley. The trolley shall be lockable in fully plugged in position and devices shall be provided to ensure positive plugging in. In test position, power contacts shall be totally isolated and a device shall be provided for indication of test position.

5.8.6. All switch drives other than rotary switches, shall be lockable in both 'ON' and 'OFF' positions. The switches/moulded case circuit breakers shall be interlocked with the compartment door to prevent opening of the door when the switch/ moulded case circuit breaker is in 'ON' position and to prevent switching on when the door is open. A defeat mechanism for this interlock shall also be provided.

5.8.7. The maximum height of the operating handle and switches shall not exceed 1900 mm and the minimum height not below 300 mm.

5.8.8. Unused modules in the panel shall be fully equipped with hinged door, power and control terminals for starter modules and cradle for future use.

5.9. SWITCHGEAR MODULES

5.9.1. Switchboard shall be completely lined up in one straight row with the type and quantities of feeders as defined in switchboard data sheet. Generally the feeders of three main categories are identified as circuit breaker, MCCB and motor starters.

5.9.2. Fully drawout modules required for motor control shall consist of MCCB, contactor, relays etc. and internal control wiring of all starter modules of each type shall be identical for all ratings.

5.9.3. Fully drawout modules required for MCCB feeder shall consist of MCCB, relays etc. internal control wiring of all modules of each type shall be identical for all ratings.

5.9.4. Minimum VA rating of the control transformer shall be 150% of the values derived from design consideration provided for each bus section for motor control circuit voltage and each transformer shall be sized for the entire switchboard. For PMCC/ MCC having two bus sections and coupled by bus tie shall have manual changeover switch for the control transformers.

5.9.5. To facilitate site modification due to changes in motor KW ratings and to minimise spares inventory, overload relays shall meet the following requirements:

a) All bimetal overload relays shall be separately mounted type with connecting links rated for the maximum rating of the contactor in a starter module.

b) Bimetal overload relays of various current ranges required for motors likely to be connected to a contactor must be identical in dimension for inter-changeability. In case offered relays are with different dimension for any particular starter module, special mounting plate suitable for mounting different relays shall be provided in all the modules of that size.

5.9.6. All combination starter feeders shall meet the requirements of Type-2 co-ordination as per applicable IS/IEC.

5.10. SWITCHBOARD COMPONENTS

5.10.1. Circuit Breakers.

i. Circuit breakers shall be air break, drawout type. Circuit breaker for generator incomer shall be with four poles unless specified otherwise. All other circuit breaker shall be 3 pole type.

ii. The circuit breakers shall be provided with mechanically operated emergency tripping device. This device shall be available on the front of the panel. Mechanically operated 'closing' device shall be provided for all breakers except circuit breakers controlling motor feeders. However mechanical closing shall be inhibited for all breakers in service position

iii. Circuit breakers shall be provided with minimum 4 NO + 4 NC contacts, wired and available for purchaser's use. The available spare auxiliary contact shall be multiplied to have 4 NO + 4 NC spare contacts (minimum) if sufficient number of breaker auxiliary contacts are not available.

iv. Circuit breaker position shall be indicated electrically .The following indicating colour shall be used.

BREAKER 'CLOSE'	RED
BREAKER 'OPEN'	GREEN
BREAKER 'AUTO TRIP'	AMBER
BREAKER 'SPRING CHARGED'	WHITE

v. Circuit breakers positions (OPEN AND CLOSED), location (SERVICE AND TEST) and spring charged condition shall also be indicated mechanically.

vi. Unless otherwise specified, all circuit breakers in the switchboard shall be provided with electrical power operating mechanism. Wherever circuit breaker are provided in place of Isolators, Breaker can be manually operated type.

vii. Operating Mechanism

a) Electric power operating mechanism shall be motor wound spring charged stored, energy type. However, manual operating mechanism may be of the spring charging stored energy type or the spring assisted type. For" circuit breakers with electrical power operating mechanism, provision shall be made for- manual spring charging. Closing time of circuit breakers with manual operating mechanism shall be independent of the speed of the operating handle.

b) All stored energy operating mechanism shall be equipped with following features.

- Failure of springs, vibrations or shocks shall not cause unintended operation of breaker or prevent intended tripping operation.

- Closing of circuit breakers shall be prevented unless the spring is fully charged.

c) All electrical power operating mechanisms shall be suitable for remote operation and shall be equipped with following features.

- Provided with universal motor operable on AC or DC control supplies.
- Provided with emergency manual charging' facility. The motor shall be automatically, decoupled (mechanically) once the manual charging handle is inserted.
- Closing operation of circuit breaker shall automatically initiate charging of the spring for the next closing operation without waiting for tripping of circuit breaker.
- Closing operation shall be completed once the closing impulse is given and the first device in the control scheme has responded even though the control switch / PB is released provided no counter

trip impulse is present.

d) Circuit breaker trip and closing coils in case of electrically operated breakers and trip coil in case of mechanically operated breakers and circuit breaker indication shall be suitable for satisfactory operation on a control supply system indicated in data sheets/job specification.

e) Circuit breakers shall be provided with anti-pumping feature.

f) The breakers shall be trip free and shall be provided with a release to trip the breakers instantaneously if closed on to a fault.

g) Releases are not required to be provided with breakers where relays are used. However breaker having AC control supply voltage shall be provided with under voltage release unless specified other wise.

5.10.2. Contactors

a) The contactors shall be air break type, equipped with three main contacts and minimum 2 NO + 2 NC auxiliary contacts. The main contacts of a particular contactor for motor starter module shall have AC-3 ratings as specified in data sheet.

b) Unless specified otherwise, the coil of the contactor shall be suitable for operation on 240 V, 1 Ph, AC supply and shall work satisfactorily between 80 to 110% of the rated value.

5.10.3. Thermal Overload Relay

i. Bimetal relays shall be provided for protecting the motor from thermal overload.

ii. Bimetal relays shall be manually reset type with the reset push button brought out on the front of the panel. The reset push button shall be capable of being operated without opening the compartment door.

iii. Bimetal relays shall have built-in single phasing prevention feature which operate even with 50% rated current at the time of single phasing.

5.10.4. Moulded Case Circuit Breakers (MCCBs)

i. MCCBs shall be provided in the switchboards for circuit protection and rating shall be as indicated in the switch board data sheet.

ii. MCCBs shall be provided with spring assisted quick make/ break manually operated trip free mechanism. Wherever specified, MCCB shall be suitable for remote tripping operation and the tripping device shall be suitable for the specified control supply voltage.

iii. MCCBs shall preferably be provided with adjustable type tripping device with inverse time

characteristic for over load protection and instantaneous characteristics for short circuit protection.

iv. 'ON' and 'OFF' position of the operating handle of MCCB shall be displayed and the operating handle shall be mounted on the door of the compartment housing MCCB.

v. Each MCCB shall be provided with minimum 1 NO + 1 NC auxiliary contact and 1 NO contact for tripping indication/alarm for purchaser's use.

vi. MCCBs as part of motor starter module shall be current limiting type and type tested for Type-2 co-ordination as per applicable IEC/IS.

5.10.5. Relays

Transformer feeders and motor feeders above 30 kW shall be fitted with intelligent protection relays that shall provide all the protection requirements. Each intelligent protection relay shall be equipped with dedicated local control and indications and it shall be possible to test the relays without disconnecting the wiring or withdrawing the relay. The protection relays shall be provided with RS485 serial communication capability for reporting status to the platform PCS system. Communications shall be via an internationally accepted protocol such as 'Modbus RTU', 'Profibus', 'Ethernet' or 'Control Net'. Each protection relay shall be lockout type with hand reset feature and suitable for operation from 50% to 110% of the specified control voltage.
Protection relays shall be fitted with three normally open and one normally closed auxiliary contact other than those required by the starter. These spare contacts shall be voltage free and shall be wired to the terminal block. Complete system required for setting each type of intelligent relay shall be provided.

5.10.6. Instrument Transformers (CTs/PTs)

i. Current transformers shall generally conform to applicable IEC/lS and any special requirement with respect to Numerical relay shall be taken care by the vendor. For general guidance the vendor shall note that the protective current transformers shall have an accuracy class "5 P" and an accuracy limit factor greater than "10 ". However CTs for restricted earth fault shall be of class "PS". Vendor shall co-ordinate the knee point voltage, magnetizing current for PS class CTs to avoid saturation and mismatching of CTs provided at other end by other vendor.

ii. Current transformers for instruments shall have an accuracy class 1.0 and accuracy limit factor less than 6.0. However accuracy class of 3.0 is acceptable for CT's meant for remote ammeters. 'The current transformers in breaker feeders shall be capable of with standing the applicable peak momentary short circuit and the symmetrical circuit current for 1.0 second.

iii. The voltage transformers shall be cast resin type .PT shall be provided with MCCB/ MCB on primary side and MCB with auxiliary contact on the secondary side.

5.10.7. Measuring Instruments

i. All multifunction meters shall be digital type with LCD display.

5.10.8. Control Switches

All control switches shall be rotary, back connected type, having a cam operated contact mechanism. Preferably phosphor bronze contacts shall be used on the control switches. Switch shall have pistol grip handles for circuit breaker control and knob type handle for other applications. Ammeter selector switches shall have make before break feature on its contacts. The selector switch shall generally have 4 positions for reading 3 phase currents and fourth position for OFF. The voltmeter selector switch shall also have 4 positions. Three positions shall be used to measure phase to phase voltage and fourth shall be OFF position.

5.10.9. Push Buttons

Push button colours shall be as follows:

Stop /open/emergency …….. Red
Start/close……...Green
Reset/test…….……... Yellow / Black / White

5.10.10. Indicating Lamps

Clustered LED type low power consumption indicating lamps with minimum 8mm diameter size shall be considered.

5.10.11. Auxiliary Relays/Contactors

Auxiliary relays/contactors shall generally be used for interlocking and multiplying contacts. Auxiliary contact shall be capable of carrying the maximum anticipated current.

5.10.12. Timers

All timers, unless otherwise stated, shall be solid state type and shall have adjustable time setting of required range. The time settings, where specified, shall be accurately set before dispatch of the switchboard.

5.11. BUS DUCT

i. The bus duct shall be of box frame construction having 3 mm thick cold rolled sheet steel enclosure suitably braced to withstand the maximum applicable mechanical and electrodynamic forces. Bus duct shall be manufactured in standard lengths as far as possible and maximum length of section shall not exceed 3000mm.

ii. The bus duct shall be dust-tight, vermin proof with degree of protection IP-56. The covers shall be in suitable lengths for ease of removal and shall be arranged to give complete accessibility to the bus bars, joints, bends, supports etc.

iii. The construction of bus duct shall be such that all nuts/bolts shall be easily accessible at site during installation and maintenance. Suitable drain holes with proper plugs shall be provided for natural draining of any water collecting within enclosure due to moisture condensation. Necessary slope shall be provided for water drainage so that water does not fall on the switchgear/transformer.

iv. Necessary flanged opening shall be provided at the terminating ends of bus duct. These flanges shall match with corresponding flanges in the equipment to which they are connected. Proper alignment and co-ordination regarding Phase Sequence etc. between bus duct, transformer installed outside the switchgear room, switchgear termination etc. shall be ensured by the supplier.

v. Phase Crossover chamber, if required, shall be provided.

vi. The bus duct shall be supplied with all the necessary hardware for making the site assembly of shipping sections including that for bus bar joints/coupling/terminations etc. The hardware shall be zinc passivated or cadmium plated.

vii. Bus duct shall be supported from overhead hangers inside the switchgear room and suitably supported from bottom/side in case of outdoor installation.

viii. Bus bars shall be made of high conductivity electrolytic copper flats and shall be insulated by using heat shrinkable FRLS zero halogen sleeves. The sleeves shall be rated to withstand the system line-to-line voltage for 1 minute. This shall be verified by a type test in which the line voltage will be applied between the sleeved main bus bar and an aluminium foil wrapped closely around the insulation over a length of at least 500 mm. All bus bar joints shall be provided with removable FRP shrouds.

ix. Bus bars shall be supported at regular intervals on insulators made of non hygroscopic, non-inflammable material with tracking index equal to or more than that defined in standards. Both bus bar and supports shall be adequately sized and braced to withstand dynamic and thermal stresses the specified short circuit current for 1 second. Only zinc passivated or cadmium plated high tensile strength steel bolts, nuts and washers shall be used for all bus bar joints and supports.

Red, yellow and blue colour shall be used for phase bus bars and black colour shall be used for neutral bus bars.

x. Bus bar size shall be suitable for specified continuous current rating at specified design ambient temperature. The thermal design of the bus bars shall be based on installation of the bus duct in poorly ventilated indoor conditions. The continuous current rating of the neutral bus bars shall at least be half of that of Phase busbars.

xi. Expansion joints with tinned Copper flexible shall be provided to take care of expansion. Minimum one expansion joint shall be provided for each 3000 mm long straight length of bus duct. Each shipping section shall meet this required separately.

xii. Separate adapter chamber shall be provided at the transformer and switchgear ends matching with transformer flange and switchgear flange respectively. The termination of bus bars at the transformer end and switchgear end shall be done through tinned copper flexible joints.

xiii. Bus duct shall be provided with easily accessible inspection covers at suitable intervals. Inspection covers shall have lifting hooks. Warning/caution boards shall be fixed to these covers.

xiv. Copper earth bus shall be run throughout the length of bus duct and all metallic non-current carrying parts shall be connected to it. The earth bus shall have provision to connect it either to the system earth bus or to the equipment on which the bus duct is terminating, as the case may be.

xv. Bus bar chamber shall be provided with adequate number of space he 240V and shall be complete with MCCB and thermostat having variable setting. Space heater junction box for termination of incoming cable shall be provided near switchgear end. The minimum degree *of* enclosure protection for junction box shall be IP-42.

6. TESTING AND INSPECTION

6.1. During fabrication, switchgear and bus duct shall be subject to inspection by Company or by its authorized representatives. Manufacturer shall furnish necessary information concerning the supply to Company.

6.2. All routine and acceptance tests shall be carried out at manufacturer's work under his care and expense.

6.3. Stage inspection after the pre-treatment and preparation of under surface and before final painting shall be carried out by Company.

6.4. Prior intimation of at least 20 days shall be given to enable the Company representative to witness the tests.

6.5. Acceptance tests shall be as follows:

6.5.1. A general visual check shall be carried out. This shall cover measurement of overall dimension, location, number and type of devices, terminal boxes, location and connection of terminals etc.

6.5.2. Manual and electrical operation of Circuit Breakers. / relays shall be checked under the worst conditions of auxiliary supply voltage.

6.5.3. Dry insulation test with power frequency voltage shall be conducted for the main and auxiliary

circuits. .

6.5.4. Insulation resistance of the main and auxiliary circuits and bus duct shall be checked before and after High voltage withstand test.

6.5.5. Operation check shall be carried out for every control function / interlocks as per the schematic diagrams by manually simulating fault conditions and operation of control switches/relays etc.

6.5.6. Relays shall be tested with secondary injection test equipment.

6.5.7. Primary injection test to check winding of current transformers, ammeter, ammeter selector switch and correctness of wiring connection between them.

6.5.8. For equipment bought from other sub-suppliers, certified test reports of tests carried out at the manufacturer's works shall be submitted. Normally all routine tests as specified in the relevant standards shall be conducted by the /sub-supplier at his works.

6.5.9. Interchangeability of similar modules shall be checked on a random basis. This may be done on one module of each size.

6.5.10. LV switchboards shall be type tested as per IEC 61641 for Internal arc.

7. VENDOR DATA REQUIREMENTS

7.1. Data sheets (Duly Filled-In)

7.2. DIMENSIONAL/ASSEMBLY DRAWINGS

- GA Drawings(Elevation &Plan) of switchboard including clearance requirements
- Installation Plan including foundation, cutout and mounting details
- Cross Sectional View
- Bus Duct GA Drawing, if applicable
- Bus Duct Termination Drawing, if applicable
- Cubicle Arrangement Drawing
- Component Drawing
- Name Plate Drawing
- Arrangement of cable termination

7.3. ELECTRICAL WIRING DRAWINGS

- Single Line Diagram
- Control Schematic
- Wiring Diagram And Terminal Details
- Interpanel Wiring Diagram

7.4. Panel Schedule & Bill Of Material

7.5. Bus Bar Sizing Calculation

7.6. Relay Characteristic Curve

7.7. Auxiliary Power Requirement Data (AC & DC)

7.8. QA Plan Of Vendor

7.9. Inspection Plan And Testing Procedure

7.10. Test Records

7.11. Type Test Certificate (For Panel, Breakers, Components and bus duct)

7.12. List Of Special Tools & Tackles

7.13. DATA BOOK/MANUAL
- Installation Manual
- Operating/Maintenance Manual
- Catalogues/Brochures

NOTES:

- Items marked with asterisks (*) must be furnished along with bids. All other items including the above shall be submitted for Company's approval/information during detailed engineering.

- All calculations furnished during bid stage shall be only for information. They shall be checked during detailed engineering stage. Any change in size of bus-bars etc. shall be done without any price implication.

8. CERTIFICATION

All offered equipments or those of' similar design and construction features manufactured by the same vendor:

- Shall have been type tested by an authorized testing agency/lab viz. CPRI, ERDA etc.

- Shall be having current certification/approval/listing by UL/FM/ATEX/IECEx etc.

9. PACKING AND TRANSPORTATION

The offered LV switchgear assembly along with their accessories shall be suitably packed for offshore transportation & installation, as per site conditions and shipped to site.

FUNCTIONAL SPECIFICATION FOR ELECTRICAL EQUIPMENT OF PACKAGED PLANT

Prepared / Revised By	Reviewed By	Approved By	Total No. of Pages	Date	Rev. No.
Karishma Laskar	Avinash Kumar	Pradeep Kumar	16	24.01.2022	5
B.Rajkumar	A Rajamouly	A Sezhian	19	14.09.2016	4

1. SCOPE

This specification defines the minimum requirements for the design, manufacture, inspection, testing and commissioning of electrical equipment and components of packaged equipment for use on a well platform or process platform. This specification outlines the electrical requirements of packaged equipment where a specific electrical specification does not cover that equipment such as Air Compressors, Process Gas Compressors etc.

2. CODES , STANDARDS AND SPECIFICATION

2.1 The design engineering and installation of all electrical equipment supplied as part of packaged plant shall comply with the latest revisions of the relevant codes and standards of:

IEC : International Electro-technical Commission
BSI : British Standards Institution
NEC : U.S. National Electrical Code
NEMA: National Electric Manufacturer's Association
IEEE : Institute of Electrical and Electronics Engineering
API : American Petroleum Institute
BIS : Bureau of Indian Standards

2.2 Any other recognized international code or standard may be followed in lieu of above only with the prior approval of the Company.

3. GENERAL REQUIREMENTS

3.1 Scope of Work

The Contractor shall develop, design, and engineer all data/drawings for the electrical equipment and components covered by the packaged equipment keeping the following in consideration:

(a) Safety to personnel, equipment and marine life.
(b) Reliability of service.
(c) Minimum fire risk/hazards.
(d) Ease of maintenance and operation.
(e) Automatic protection of all electrical equipment.
(f) Power supply to electrical equipment and machinery within the design limits specified.
(g) Maximum interchangeability of electrical equipment.
(h) Fail safe design.

(i) Interface provision to other package equipment, where required.

3.2 Safety

3.2.1 All equipment shall be designed to minimize any risk due to internal short circuit and to ensure safety to personnel during all operating conditions, inspections and maintenance.

3.2.2 The equipment shall meet the approved limits for electromagnetic compatibility for emission and immunity.

3.2.3 The choice of equipment shall be made with due considerations to the fire hazards involved. Flame retardant materials shall be used where appropriate.

3.2.4 Toxic materials such as asbestos, polychlorinated biphenyls (PCBs), mercury and the like shall not be used.

3.3 Packaged Equipment Availability and Reliability

3.3.1 All components shall be designed to operate for the life span of the items of the packaged equipment.

3.3.2 In making assessments of the availability and reliability, the Contractor shall estimate maintenance and repair times, assuming that the spares' holding is in accordance with their submitted recommendations unless otherwise stated.

3.4 Hazardous Area Certification

For electrical equipment supplies as part of packaged equipment, installation of equipment and wiring shall comply with provisions defined in Electric Design Criteria enclosed in the bid package.

3.5 Units and Information

All quantities and dimensions shall be expressed in metric units. All information, manual, certificates, data and inscriptions shall be in English language.

4.ELECTRICAL SYSTEM DESIGN

4.1 General

A significant feature in the design and installation of electrical equipment and systems shall be the considerations of protection from transport, impact and explosions and the resultant acceleration forces. To this end, equipment shall be specified to operate satisfactorily with shock load forces. Prior to being energized, long periods may occur when the equipment is standing idle in an extremely corrosive, salt laden, marine atmosphere. The Contractor shall provide all necessary protection for the equipment, to prevent fungal growth and tracking of circuit boards, insulation, and the like, due to moisture. The Contractor shall state in their tender the provisions which have been taken to avoid this, e.g. desiccant, anti-condensation heaters. The Contractor shall take adequate precautions to prevent electrolytic corrosion between dissimilar metals.

4.2 Degrees of Protection

4.2.1 For Minimum degree of protection of outdoor and indoor electrical equipment refer to Electrical Design criteria" and respective FS.

4.2.2 All outdoor mounted equipment shall be suitably protected against corrosion. The corrosion resistance must be effective for the design life of the equipment, or as per the stated maintenance intervals where equipment is required to be changed out as a part of the maintenance service. All outdoor equipment is subject to approval by the Company.

4.3 Utilization Voltages

4.3.1 Utilization voltages are specified in the Electrical Design Criteria. If the Contractor requires voltage other than those listed, the Contractor shall provide the means of transformation.

4.3.2 Emergency and essential supplies are intended for statutory, essential life support and no break requirements.

4.3.3 Momentary system disturbances, for example during short circuit or motor stating, will result in voltage and frequency variations in excess of steady state values. The starting of the largest motor may give rise to a voltage reduction to 80% of the AC Nominal voltage for a few seconds. Transient over voltages of 120% for 1 second can occur. These transient voltages shall have no effect on equipment operation.

4.4 Design Margins

The contractor shall refer to Electrical Design criteria for design margin.

4.5 Load List

The Contractor shall provide a list of all individual loads, and the estimated summation of normal and maximum demand loads for each voltage supply.

4.6 Electrical Protection

4.6.1 The equipment shall provide adequate safeguards against the effects of any fault occurring on the system or component parts.

4.6.2 All protective devices, including relays and current transformers (CTs) etc., are to be adequately rated to withstand the prospective short circuit current, which can flow.

4.6.3 The relay protection devices shall be such that a clear indication is given of the fault which causes a trip (latched indication).

4.6.4 A means of disconnection shall be provided to permit servicing of individual systems or control components.

4.6.5 The Contractor shall provide as a minimum, details of the electrical protection device types and settings, load current and power factor, circuit breaker sizes and trip settings, and minimum operating current.

4.7 Motor Control

4.7.1 Automatic start control for motors shall be so designed that in the event of the power failure, or severe transient voltage dip, the motor will not automatically restart on restoration of power supply unless specified to do so.

4.7.2 Motor control will normally be from the local control stations or local control panels of package.

4.7.3 Local start/ stop stations shall be provided for all drives except drives such as GT starter, Fuel gas heater , Emergency Lube oil pump motors etc. which shall be decided during detail engineering. Each start / stop station must incorporate latching mushroom-type stop push buttons.

4.7.4 For motors driven by VFD (Variable Frequency Drive), digital diagnostic tools such as HMI or diagnostic software with all interfacing ancillary shall be provided for the VFD.

4.7.5 For drives controlled by packaged control panels, a local latching emergency stop shall be provided for each drive, unless package emergency stops are more suitable due to the layout of the equipment.

4.7.6 Latching 'Emergency Stops' shall be provided for each package. Multiple 'Emergency Stops' shall be used for large machines to allow access from either side of the machine.

4.7.7 For packages with access within the enclosure internal latching type 'Emergency Stops' shall also be provided.

4.7.8 The Contractor shall advise of any special protection, indication, alarm, or starting logic requirements of the motors forming part of the equipment package that are required to be incorporated in the motor starter. It shall not be possible to start a motor until all stop controls have been reset.

4.7.9 Motor control circuit shall, wherever possible, be designed for three-wire control. Motor power cables shall generally be wired directly to motors.

4.7.10 Where required, Local/Remote selector switches shall be provided in MCCs.

4.7.11 Start signals shall be normally opened (de-energized), momentary close (energized 2 seconds) to start. Field start/stop stations and unit control panels shall provide voltage free 240V AC rated contacts.

4.7.12 Stop signals shall be Normally Closed (energized), maintained open (de-energized) to stop.

4.7.13 Field lock off stop stations and unit control panels shall provide potential free 240V AC rated contacts.

4.7.14 Indicating lights shall be red for running and green for stopped.

4.8 External Connections

The Contractor shall provide a block diagram or equivalent, and termination strip details and connection diagrams to show the extent of supply and details of the terminations required.

4.9 Control System Interfacing

4.9.1 If required, Communication facilities shall be provided for remote monitoring of all important variables (loads, voltages, temperatures) and status and alarm monitoring. The monitoring facilities shall be compatible with the platform process/utilities control systems and utilize redundant serial communication interfaces to the DCS.

4.9.2 Interfacing with the Emergency Shutdown (ESD) system shall be via discrete fail safe wired 24VDC interlock circuits.

5.ELECTRICAL EQUIPMENT SELECTION AND INSTALLTION

5.1 General

5.1.1 All materials shall be new and in good condition.

5.1.2 All equipment and devices of the same rating shall be interchangeable.

5.1.3 Spare and replacement parts shall be regularly available for any equipment supplied.

5.2 Equipment in Hazardous Areas – Minimum Requirements

5.2.1 Electrical equipment for service in hazardous area shall be certified as per area classification. The contractor shall refer to Electrical Design criteria for Area classification requirements.

5.2.2 The Contractor shall provide the copies of the Hazardous Area Certificates of Compliance for all equipment supplied for installation in hazardous area showing the full details of the equipment and statutory approvals. Certification tag plates shall be attached to all such equipment.

5.3 Motors

All motors for packaged equipment shall meet the requirements of FS 4008 “Functional Specification for Electric Motors”.

5.4 Anti-Condensation Heaters

5.4.1 A 240VAC 50Hz thermostatically controlled anti-condensation heaters with adjustable settings shall be installed with its own circuit breaker for connection to a separate dedicated external power supply in each panel.

5.4.2 All terminals associated with heater circuits shall be fully shrouded and labeled.

5.5 Heater Control

Heaters shall be designed and certified to prevent the occurrence of abnormally high temperatures, and when for use in hazardous areas, shall not exceed T3 rating (200 C). Elements shall be of the metal sheathed type and shall be arranged to provide easy replacement.

5.6 Transformers

Any transformers shall be copper double wound and air-cooled type. Transformer shall be continuously rated and generally confirm to IEC-60076-1 and IEC- 60289. All transformers feeding the same switchgears shall have equal rating and be of the same make.

5.7 Batteries

If batteries are required as a part of packaged plant they shall be Ni-Cd/VRSLA(Valve Regulated Sealed Lead Acid) type and shall be installed in separate cubicles in safe area. Battery cubicle shall be designed with adequate ventilation. However, approval by company shall be obtained for use of any battery within area of package.

5.8 Control Equipment

5.8.1 The Contractor shall furnish all controls necessary for the satisfactory operation of the packaged unit. These controls, when required shall be mounted in a control panel and shall include all control relays, timers, push buttons, selector switches, indicating lights and control transformers etc.

5.8.2 The control system arrangement and equipment shall be subject to the Company's approval.

5.8.3 It is vital that the equipment and the installation are versatile so that later modifications may be carried out on site with minimum disruption. Prototype or purpose built components are unacceptable without prior approval by the Company.

5.9 Control Panel / Junction Boxes

5.9.1 Package control panels shall be fitted with an incoming supply isolator mechanically interlocked with the access door, which shall break all poles. Including the neutral. The isolator should be load break, fault make type. A padlocking facility for the isolator in the off opposition shall be provided. Separate junction boxes for circuits requiring interface connections shall be provided as part of packaged unit in accordance with the segregation requirements defined in section 19.2

5.9.2 Control panels to be installed :

(a) In hazardous areas shall be as per area classification, ingress protection class IP56 and fabricated from cast stainless steel (preferred).

(b) In outdoor areas (non-hazardous), it shall be ingress protection class IP56 and fabricated from 316 L stainless steel.

(c) In indoor non-hazardous areas, IP42 minimum and fabricated from sheet steel and duly painted.

5.9.3 Control equipment components shall not be mounted in junction box.

5.9.4 Rain canopy shall be provided for outdoor equipment.

5.9.5 Control panel shall be free standing type with hinged door.

5.9.6 All control panels and junction boxes shall be identified with a stainless-steel tag in accordance with the approved drawings.

5.9.7 Anti-vibration mountings shall be fitted to all critical components and base plate mounted control panels.

5.9.8 A lamp test facility shall be provided on all indicator panels.

5.10 Components

5.10.1 Control relays and contactor coils shall be designed to operate within range of 85% to 110% of the rated voltage and drop out voltage shall not be below 65% of the rated voltage. Timer relays shall be of solid state or motor operated design. Where solid state power supplies are supplied, they shall be of natural air-cooled type.

5.10.2 Stop push buttons and switches shall be of hand reset type. Stop push buttons shall have red mushroom head operators.

5.10.3 All screws, studs and terminals shall be secured against vibration by locknuts, prevailing torque nuts, spring washers, or other approved design.

5.10.4 All contacts provided for equipment (such as control panels, push buttons, and selector switches etc.) for outdoor services shall be hermitically sealed type or equivalent.

6.CONSTRUCTION

6.1 Wiring /Cabling

Wiring shall, where possible, be run in ventilated plastic trunking fitted with covers and manufactured from flame retardant reduced halogen material. Conduit system shall be avoided as far as possible and when used it shall be as per recommendation of NEC.

The minimum size of internal wiring conductors shall be 2.5 mm2 stranded and having flame retardant, low smoke, low toxicity, moisture resistant insulation, except for proprietary wiring within pre-wired package modules. Power and control wiring shall be generously sized copper conductor and de -rated for internal cabinet temperature.

Wiring identification shall be in indelible ink. Papers markers are not acceptable.

Plug sockets and connectors shall be clearly identified and should be uniquely keyed.

All wiring, not including pre-wired package modules, associated with nominal voltage shall comply with the following table to ensure positive identification.

Voltage	Conductor	Insulation cover
6.6/11 KV	Phases	Red, Yellow, & Blue
	Neutral	Black
440 V AC	Phases	Red, Yellow & blue
	Neutral	Black
110 VAC	Live / neutral	Red /Black
110 VDC	Positive/ Negative	Purple/Black
24 VDC	Positive / Negative	White/Black
12 VDC	Positive /Negative	Brown/Black
Earth	Green with yellow stripe	

Wiring across door hinges shall be protected against mechanical damage, preferable by the use of flexible conduits that travel along the hinge line for a minimum of 450 mm.

Input cables to an enclosure shall not run in close proximity to internal or output wiring.

The method of connecting internal wiring to components shall be in accordance with the recommendations made by the component manufacturers.

All power and control cabling shall be in continuous lengths and without any splice or intermediate joints.

Where clamping or pillar type terminals are provided, cables shall be terminated with compression lugs of type appropriate to the terminals. Where crimped terminations are used, they shall be bootlace ferrules with shank of crimp insulated.

6.1.1 Segregation

6.1.1.1 The packaged equipment shall be assembled and fully cabled by the contractor to the edge of the package interface junction boxes, except for motor power, anti-condensation heater and motor local control station connections which shall be terminated at MCC.

6.1.1.2 Control, instrumentation, intrinsically safe instrumentation, lighting and specified power circuits shall be fully and physically separated. If installed in the same tray / ladder a metal barrier shall be provided between cables of different voltages and services.

6.1.1.3 The position of interface junction boxes shall be approved by company before construction.

6.1.2 Cable Routing

6.1.1.1 Cable shall normally enter equipment from the bottom face. Side entry may only be used where approved. Top entry shall not be permitted.

6.1.1.2 Cables installed on rack/tray shall not be installed in more than two layers.

6.1.1.3 Cable rack routes shall remain accessible after installation of all equipment. All outdoor equipment shall have suitable removable covers.

6.1.2 Cable Racking

6.1.2.1 Cable ladder and cable tray shall be fabricated from fiberglass reinforced plastic (FRP)/ SS 316 for packaged items.

6.1.2.2 Support span of cable ladder shall be no longer than 3m. Support span for cable tray shall be no longer greater than 1.5 meter.

6.1.3 Multi Cable Transit

6.1.3.1 Consideration shall be given to the requirement of segregation of safe and hazardous areas within an equipment package, particularly with regard to cables passing through a wall of floor/deck. Multi cable transits shall be used for cable penetration between hazardous and non-hazardous areas and through fire rated barriers.

6.1.3.2 Multi cable transits shall be used for cable penetration through acoustic hoods, etc.

6.1.3.3 A minimum of 25 % spare ways within the multi cable transit shall be provided complete with filler blacks.

6.1.4 Cable Glands

6.1.4.1 The contractor shall provide cable glands for all cables within their supply. Cable glands shall have nylon or integral nitride sealing washers. Fiber washers shall not be used.

6.1.4.2 Cable gland shall be nickel plated, double seal, deluge protected, IP X6D.

6.1.4.3 Where cable glands are terminated in a gland plate or non-explosion proof boxes, the gland shall be retained using a star washer and locknut. For non-metallic boxes, an internal metallic plate or tag with earth connection point shall also be provided.

6.1.5 Cable Fixing Arrangement

6.1.5.1 Cables shall be fixed to cable tray or ladder at intervals of not more than 600mm.

6.1.5.2 Single core cable shall be laid in trefoil groups, with the use of trefoil clamps suitably rated for short circuit potential expectant of connected load.

6.1.5.3 For LV double trefoil circuits the neutral conductor shall be strapped between two trefoil groups.

6.1.5.4 Cables shall be bundled in groups of not more than 6(six) for cables less than 40 mm overall diameter. Such groups shall be fixed by means of cable straps.

6.1.5.5 All cables straps, ties or clamps shall be of stainless steel.

6.2 Terminals

6.2.1 Terminals shall be provided for all external connections. External connections shall not be made directly to terminals forming integral part of components.

6.2.2 Terminals shall incorporate a pressure plate.

6.2.3 Terminals for external connections exceeding 6 mm2 shall be suitable for straight shanked lug type cable termination.

6.2.4 Where terminals for external connections require the use of other than straight shanked compression lugs these shall be supplied and fitted by the manufacturer.

6.2.5 No more than two conductors shall be connected to a terminal. When more than two conductors need to be connected together to a terminal, the requisite numbers of terminals interconnected by means of permanent solid links shall be provided.

6.2.6 Terminal blocks shall have separate clamping of wiring (a separate screw compression clamp on each side of terminals) for internal and external connections. External connections shall be provided to the same side of terminal blocks for compete equipment.

6.2.7 Terminals remaining live when a unit is isolated shall be fitted with a label stating the voltage as follows: ‘DANGER -------- volts’. These terminals shall be suitably shrouded.

6.2.8 Terminals for lug type of terminations shall be with tinned copper lug and be provided with locking arrangement.

6.3 Earthing

All metal work (including hinged door or removable covers), gland plates and components or substructures or subassembly chassis shall be bonded to the earth bar.

The earth bar shall be marked green/yellow and shall have a cross section of 70 mm2. It shall extend the length of the suite and joint shall be provided between each transport unit.

Brass terminals shall be provided, fitted with lugs for copper conductor and sizes are to be determined by contractor.

Bolted frames and packaged equipment components shall be earthed diagonally opposite corners to earth grid.

6.3.1 Earth Conductor Sizes

Earth cable shall be a stranded copper conductor, with insulated green/yellow insulation sheath. The minimum size of earth conductor for electrical enclosures shall be 6 mm2.vessels , tanks, pumps and compressors shall be bonded to earth using 70 mm2 conductor. Items such as pipes and ductwork which have insulating material (i.e. gasket) between connected sections shall be made electrically continuous by bonding with a 6 mm2 earthing strap.

6.4 Lighting

6.4.1 Lighting levels shall be designed to meet Indian standard supplemented by the requirements of APIRP14F.

6.4.2 The package equipment Vendor shall wire the lighting installation to a distribution point/ junction at the package edge. The company shall approve the type and location of light fittings. In hazardous area light fitting shall be as per area classification. Where required explosion proof type light fittings fed from 24/110 DC shall be installed to provide escape lighting.

6.4.3 Light fittings supplied with package equipment must be suitable for the design life of the platform specified elsewhere in the bid package, excluding components of fittings that can be easily replaced during routine maintenance (stainless steel fittings are the preferred option).

6.5 Name Plate, Labels and Markings.

6.5.1 The following information shall be given on the name plate:

(a) Order number and date.
(b) Manufacturer's name.
(c) Serial number.
(d) Tag number.

(e) Cooling method.
(f) Maximum permitted Manufacturer's supply fuse rating.
(g) Equipment rating in kW.
(h) Rated output current.
(i) Year of manufacturer
(j) Weight in kg.

6.5.2 The nameplate shall be manufactured from 316 stainless steel.

6.5.3 The language for all labels shall be English.

6.5.4 Danger labels shall have white lettering on a red background and shall comply with IEC 60027.

6.5.5 Information labels shall have black lettering on a white background.

6.5.6 Labels shall be engraved, embossed or otherwise formed so as to be permanent.

6.5.7 Labels shall identify the following:

(a) The function for the total assembly of equipment;
(b) Each control switch or push button;
(c) Each indication lamp;
(d) Each component part of the equipment;
(e) Each fuse or circuit breaker;
(f) Maximum permitted fuse rating;
(g) Each position of selector switch;
(h) Each instrument.

6.6 Painting And Protective Coatings

6.6.1 All metal parts shall be treated so as to ensure sufficient anticorrosive protection. Hardware shall be zinc passivated or electro galvanized. Panel enclosure and structure supports shall be thoroughly cleaned and degreased to remove mild scale and rust etc.

6.6.2 The painting system shall be in accordance with 'Protective Coatings for Offshore Structures and Facilities' Specification Number 2005 or the manufacturer's standard, provided the Company approves it as being an acceptable equivalent.

6.7 Maintenance Facility

6.7.1 The electrical equipment supplied as a part of the packaged equipment shall be designed so that equipment requiring maintenance can be serviced in safety with no effect on the system other than the isolation of the item.

6.7.2 The design and construction of the systems and its component parts shall be such as to facilitate safe testing and maintenance. The equipment location in package shall be such that the maintenance of any electrical item shall not require dismantling the other equipment of package.

7.TESTING AND INSPECTION

7.1 General

7.1.1 The contractor shall include in their tender separate identifiable costs for both factory acceptance and site testing of complete apparatus**.** The routine and type testing for the motors at vendor works shall be carried out as per international standards to ensure the performance.

7.1.2 Factory acceptance test shall be carried out at manufacturer's work and where required shall be witnessed by the company or its authorized representative.

7.1.3 The company shall be advised at least 4 (four) weeks in advance of the scheduled date of each test and again twenty (20) days prior to actual test.

7.1.4 Test should be performed under electrical conditions equivalent to service conditions.

7.1.5 The latest approved issue of all drawings shall be available at the manufacturer's works, for both manufacturer's and witnessed test.

7.2 Factory Acceptance Test

7.2.1 The contractor shall provide an inspection and test procedure for approval, which shall provide details of inspections and testing to be performed, which shall include but not be limited to:

(a)A quantitative check shall be made to ensure that all items, in specified quantities are present according to the purchase order and packing list.

(b)Insulation / Meggar Test of all cabling and wiring.

(c) A visual inspection shall be made to ensure that good workmanship and practice have been maintained through out fabrication and assembly.

(d) The electrical items i.e. motors, start stop local panel, junction boxes and MCC shall be subjected to a functional test to ensure total system operation. It is the intent of this test to prove the proper interaction of all control and safety devices.

(e) Whenever the unit is shipped in more than one piece, it shall be fully assembled, and the contractor shall ensure testing with all components assembled.

(f) High voltage test shall be carried out as per approved procedure.

(g) The test report and type test certificate shall be furnished to the company.

8.CERTIFICATION

The electrical equipment supplied as part of packaged equipment offered or a system with similar design and construction features manufactured by the same vendor:

(a) Shall have been type tested by an authorized testing agency/lab viz. CPRI, ERDA etc.

(b) Shall be having current certification/approval/listing by UL/FM/ATEX/IECEx etc.

FUNCTIONAL SPECIFICATION FOR **CABLE TRANSIT SYSTEM**

PREPARED / REVISED BY	REVIEWED BY	APPROVED BY	TOTAL NO. OF PAGES	DATE	REV.
BR	KR	AS	3	19-09-2016	0

1. SCOPE

This specification covers the minimum requirements for cable transit system to be used on offshore platforms.

2. CODES & STANDARDS:

2.1. The cable transit system shall comply to the requirements of the latest revisions of relevant standards/ directives of:

DNV : Det Norske Veritus.
API : American Petroleum Institute
IEC : International Electro-technical Commission.
ISO : International Standard Organization

2.2. Any other recognised international codes or standards may be followed in lieu of above with prior approval of the Company.

3. SITE CONDITIONS:

All cable transit systems shall be designed to withstand the site conditions specified elsewhere in the Bid Package.

4. SCOPE OF SUPPLY:

The scope of supply through this specification includes:

(a) Insert blocks or modules.

(b) Frames.

(c) Any required accessories such as gaskets, lubricants, stay plates etc required for proper installation of cable transit system.

5. TECHNICAL REQUIREMENTS:

5.1. General:

The cable transit system shall be tested and certified for fire integrity and gas tightness.

5.2. Material of construction**:** Cable transit frames shall be made of stainless steel.

5.3. Fire Integrity:

The cable transit frames shall have minimum class of A60 (SOLAS) or EI 60(BS EN 13501-2). Transit system modules or insert blocks shall have certified for fire ignitability as per ISO 11925-2 or equivalent.

5.4. Gas tightness: The cable transit system shall be rated for minimum gas tightness as stipulated in "DNV: Type Approval Programme for Cable and Pipe Penetration" or equivalent.

6. TESTING AND INSPECTION:

Testing & inspection of the cable transit system shall include but not necessarily be limited to the following:

6.1. Visual inspection.
6.2. Verification of Type Test reports

6.3. Company reserves the right to witness the final testing & inspection. Advance intimation of at least 20 days shall be given to enable the Company to depute its representative to witness the test.

7. WARRANTY:

Vendor shall have final and total responsibility for the design and performance of all the cable transit system supplied under this specification and provide necessary warranty for them in accordance with Volume 1 of bid documents.

8. VENDOR DATA REQUIREMENTS:

8.1. Technical literature and drawings consisting of information regarding overall dimensions, weight, material of construction, installation details etc. shall be provided. Details like make, type, capacity, year and month or year and week of manufacture etc shall also be provided.
8.2. Copies of type test certificates shall be provided.

9. CERTIFICATION

All cable transit system offered shall be having current certification/approval/listing from UL or FM or-by an agency approved by the Company.

FUNCTIONAL SPECIFICATION FOR LIGHT FITTINGS & JUNCTION BOXES FOR UNCLASSIFIED AREA

PREPARED / REVISED BY	REVIEWED BY	APPROVED BY	TOTAL NO. OF PAGES INCLUDING THIS	DATE	REV.
Ashish kumar sao	Ajanta Sinha	Mukul Kumar Gupta	05	22-11-24	6
Ashish Kumar	Pushkar Singh	Pradeep Kumar	05	13-02-23	5
Ashish Kumar	Pushkar Singh	Pradeep Kumar	05	20-12-22	4
B.Rajkumar	K.Rajamouly	A.Sezhian	05	15-03-17	3

1. SCOPE

The scope of this specification is to define the requirements of LED light fixtures and junction boxes suitable for installation in unclassified areas on offshore platforms.

2. CODES & STANDARDS

2.1. The items shall be in accordance with the latest applicable Codes and Standards of :

NEC - National Electrical Code

NEMA - National Electrical Manufacturer's Association

BSI - British Standards Institution.

ANSI - American National Standards Institute

BIS - Bureau of Indian Standards

IEC - International Electrotechnical Commission

ATEX - Atmosphere Explosible

IESNA - Illuminating Engineering Society of North America

3. SITE CONDITIONS

All light fittings, junction boxes and their accessories shall be designed to withstand the site conditions specified in the General Design Criteria enclosed in the Bid Package.

4. SCOPE OF SUPPLY

The scope of supply through this specification includes:

- LED Light Fixtures complete with driver circuit.
- Junction Boxes
- Cable glands, plugs etc.

- Clamps, Brackets etc. for fixture supports.

5. TECHNICAL REQUIREMENTS

5.1. General :

5.1.1. All indoor LED light fittings and junction boxes (located in enclosed rooms) shall be industrial/decorative type with enclosure protection to IP-22, as minimum. They shall be provided with shrouding type terminals/live parts to make them shockproof, while cleaning, replacing etc.

5.1.2. The body of junction boxes shall be **UV resistance Glass-fibre Reinforced Polyester (GRP) as per IEC-60079-0** or Stainless steel (SS) and shall be free from frictional sparking hazard. Copper or copper alloy shall not be used for manufacturing of any exposed parts. **The glass polyester material, if used, shall not get damaged due to ultra-violet rays over its life span.**

6

5.1.3. The LED light fittings and junction boxes shall be suitable for mounting on poles/ceiling/columns. Suitable Clamps/brackets required for installation shall also be supplied.

5.1.4. All the lighting fixtures/junction boxes shall be provided with internal earthing terminal and external terminals as per IS/IEC 60079-0.

5.1.5. Double compression type nickel/chromium plated brass cable gland and tinned copper crimping type lugs shall be provided for all LED light fittings and junction boxes.

5.1.6. All LED light fittings and junction boxes nameplates shall bear the stamp of certifying agency.

5.1.7. The LED fixtures shall be high efficiency, durable, rugged, with minimum lumen depreciation and designed for ambient temperature of 45 deg C. The fixtures shall have been type tested in a NVLAP (National Voluntary Laboratory Accreditation Program, USA) accredited laboratory.

(1) As per LM-79 (IESNA) for
- Total Luminous Flux
- Luminous Intensity Distribution
- Electrical Power Characteristics
- Luminous Efficacy (calculated)
- Color Characteristics

(2) As per LM-80 (IESNA) for lumen maintenance and LED lifetime projections shall be made using TM-21 method.

In Situ Temperature Measurement Test (ISTMT) temperature shall be used while generating LM-80 report and TM-21 projection. The LEDs shall have 70% lumen maintenance at minimum 50,000 hours of operation. The LED fixture driver shall comply with IEC/FCC (Federal Communications Commission, USA) rules and regulations regarding electromagnetic radiation. Minimum power factor of LED fixtures shall be 0.9. Light colour shall be white and CRI shall be minimum 75. Fixture enclosure material shall be **UV resistance** GRP **as per IEC-60079-0** or Stainless steel (SS) or Copper free cast Aluminium alloy. **For Copper free cast Aluminium alloy, coating system shall be as per ISO 12944-6 for CX environment. The glass polyester material shall not get damaged due to ultra-violet rays over its life span.Protective cover shall be made of polycarbonate or toughened glass.** Offered LED fixtures should have been supplied to offshore installations. 6

5.2. Light Fittings

5.2.1. All fittings shall be suitable for operation on 240+5% V, Single phase, 50+3% Hz power supply.

5.2.2. The glass used for outdoor fittings shall be clear and toughened type suitable for conditions involving exceptional risk of mechanical damages. The light fittings shall have glass sealed into retaining ring, which in turn shall be secured to the body.

5.3. Junction Boxes

5.3.1. The junction boxes shall be provided with cable termination accessories for connecting, armoured, copper conductor, FRLS Cables. The Minimum number of side entries shall be three. Spare plugs shall be provided to block the unused entries.

5.3.2. Adequate no. of the terminals shall be provided to terminate three cables. Sufficient space for accommodating specified No. of cables and easy access to their terminals for termination purposes, shall be provided.

5.3.3. Four plugs shall be provided for mounting of junction box on wall/steel structure with the help of bolts.

6. TESTING AND INSPECTION

6.1. Testing and inspection of light fittings and junction boxes shall include but not necessarily be limited to the following:

- A visual inspection shall be made to ensure that the finishing and workmanship are up to the mark.
- Company reserves the right to witness the final testing and inspection. Prior intimation shall be given to enable the Company to depute its representative to witness the test.

7. CERTIFICATION

(1) Photometric type test certificates by UL or NVLAP (National Voluntary Laboratory Accreditation Program, USA) accredited laboratory for the following shall be provided:

(a) LM-79 (IESNA) for
- Total Luminous Flux
- Luminous Intensity Distribution
- Electrical Power Characteristics
- Luminous Efficacy (calculated)
- Color Characteristics

(b) LM-80 (IESNA).

(2) **IP/NEMA rating certificates issued by UL or FM or IECEx or ATEX.**

(3) All the light fixtures and junction boxes offered or those with similar design & construction features, manufactured by same vendor:
- **Shall have been type tested by an accredited authorized agency/lab.**
- **Shall be having current certification/approval/listing by UL/FM**

8. PACKING AND TRANSPORT

The offered equipment along-with their accessories shall be packed suitable for shipping to yard site, marine transport to offshore site. The packing shall ensure that there is no damage to the surface finish & product. The packaging shall have skid bottom for handling.

FUNCTIONAL SPECIFICATION FOR INDUSTRIAL TYPE SOCKETS & PLUGS

PREPARED / REVISED BY	REVIEWED BY	APPROVED BY	TOTAL No. OF PAGES	DATE	REV. No.
AMOL	KRM	AS	7	15.05.2017	1

1. SCOPE:

The intent of this specification is to define the requirements of welding receptacles, convenience outlets & plugs for locating in unclassified areas of offshore platforms.

2. CODES & STANDARDS:

2.1. The following codes and standards form a part of this specification:

NEC - National Electrical Code.
NEMA - National Electrical Manufacturer's Association.
BIS - Bureau of Indian Standards.
BSI - British Standards Institution.

2.2. Any other international standard or code may be used in lieu of above subject to prior approval of the company.

3. SITE CONDITIONS:

All the equipment shall be designed to withstand the conditions specified in the in the Bid Package.

4. SCOPE OF SUPPLY:

4.1. Three phase (415V, 63AMP, 50HZ), 4/3 wire industrial type welding switch socket & plug
4.2. Single Phase (240V, 15A/5A, 50HZ), 3 Wire industrial type/domestic switch socket & plug.
4.3. Weather proof cable glands, lugs & necessary hardware.

5. TECHNICAL REQUIREMENTS:

5.1. General

5.1.1. Plugs and sockets shall be industrial type and outdoor installations will be weatherproof with enclosure protection IP-56/NEMA-4 suitable for installing in outdoor areas without any extra weather protection.

5.1.2. The body of the plugs and sockets shall be cast metal or other suitable material and shall be free from frictional sparking hazard.

5.1.3. All hardware such as nuts, bolts, washers etc. shall be cadmium plated.

5.1.4. The plugs and sockets shall be suitable for mounting on the vertical face of wall/steel structure.

5.1.5. A set of special tools, required for opening/maintenance of plug and sockets shall be supplied alongwith the units.

5.2. Three Phase Welding Receptacles:

5.2.1. The weatherproof welding receptacles with interlocked switch shall be rated for 63A, 3-Phase, 415V, 50HZ, 4-Wire and shall be supplied complete with cable termination accessories for 3-1/2 x 25mm2 sheathed armoured copper conductor FRLS cables respectively. Two nos. cable entries from bottom and 2 nos. weatherproof cable glands shall be provided on each receptacle for looping to other receptacle. The unused entries shall be sealed through weatherproof plugs.

5.2.2. The receptacles shall be supplied with matching plug with cable termination accessories suitable for 4X220/0.45mm (O.D. approx. 53MM) welding cable. The plug shall be provided with round pins. The construction shall be such that the engagement and disengagement shall be by two separate and distinct movements and it shall not be possible to Plug-in or withdraw the plug if the circuit is 'on'. A built-in interlock switch shall be provided for the above purpose. Caps shall be provided for each receptacle and connected to body by metallic chain for covering the same when not in use. A scrapping earth connection shall be provided between receptacle and plug.

5.2.3. Two nos external earthing terminals shall be provided on the body.

5.3. Single Phase Plugs & Sockets:

5.3.1. Weatherproof switch socket units rated for 15A, 1-Phase, 240V, 50HZ, 3-Wire (phase, neutral and earth) shall be supplied. Switch socket shall be suitable for termination two nos. 3 core 4 mm□□ sheathed, armoured copper cables 2 nos weatherproof cable glands shall be provided on each socket for looping to other sockets. The unused entries shall be sealed through weatherproof plugs.

5.3.2. The socket shall be supplied with matching plug with cable-termination accessories suitable for termination 3 X 4 mm2 (G.D.Approx. 19 mm) tinned copper insulated flexible cables. The plug shall be provided with round pins.

5.3.3. Outdoor type sockets construction shall be such that the engagement and disengagement shall be by two separate and distinct movements and it shall not be possible to plug in or withdraw the plug if circuit is ‘ON’. A built in interlock switch shall be provided for above purpose. Indoor type sockets (to be located in enclosed rooms) shall be ordinary construction without above interlock.

5.3.4. Caps shall be provided for each socket and connected to the body by metallic chain, for covering the same when not in use. A scrapping earth connection shall be provided between the plug and socket.

5.3.5. All 15A/5A convenience outlets should conform to BS 546

6. CERTIFICATION:

All offered plug and sockets or those of similar design manufactured by same vendor:

- Shall have been type tested by an authority approved by the company
- Shall be having current certification/approval/listing by an agency approved by company or UL/ FM/ ATEX/ IECEx.

FUNCTIONAL SPECIFICATION FOR MISCELLANEOUS SWITCHBOARDS AND PANELS

PREPARED / REVISED BY	REVIEWED BY	APPROVED BY	TOTAL NO. OF PAGES	DATE	REV.
Karishma Laskar	NNJ	PK	16	31.03.2021	2
Amol	PK	AS	13	11-08-17	1

1. SCOPE

This specification describes the minimum requirement for miscellaneous switchboards and panels like Lighting and Power Panel incorporating Circuit breakers, panel meters and indicating lamps, AC DC switchboards for various purpose other than those covered in FS 4013. These distribution boards shall be used for maximum rated voltages up to and including 415V, 3 phase, 4 wire, 50 HZ A.C. or 110V, 2 wire D.C. Panel boards shall be surface mounted except where specified otherwise.

2. CODES AND STANDARDS

2.1. The distribution board and its various components shall comply with the requirements of latest revision of the relevant standards of:

BSI : Bureau of Indian Standards

IEC : International Electro-technical Commission.

BSI : British Standards Institution.

NEMA : National Electrical Manufacturers Association.

NEC : U.S. National Electrical & Electronics Engineers.

IEEE : Institute of Electrical & Electronics Engineers.

API : American Petroleum Institute.

2.2. Any other recognized International code or standard may be followed in lieu of the above with prior approval of the Company.

3. SITE CONDITIONS

All equipment shall be designed and tropicalized to withstand the site conditions as specified in General Design Criteria enclosed in the Bid Package.

4. TECHNICAL REQUIREMENTS

4.1. Enclosure and Protection

4.1.1. The switchboards shall be metal clad/metal enclosed and shall comprise standard prefabricated, cold rolled, sheet steel/metal enclosed, unitized free standing cubicles or wall mounted configuration suitable for indoor installation and safe area application. The sheet steel used for panel shall be of minimum (2mm) 14 SWG CRCA except that the doors & covers shall be made of (1.6mm) 16SWG CRCA. Wherever required stiffeners shall be provided to increase stiffness of large size doors & covers.

4.1.2. The switchboards shall be totally enclosed, dust and vermin proof. The minimum degree of enclosure protection shall be IP-51. Distribution boards shall be weatherproof. All panels shall have enclosure protection of minimum IP-51/ NEMA-12.

4.1.3. All doors and openings shall be provided with gaskets of durable material. The gaskets shall be held in a groove and shall be continuous with ends fixed with adhesive material.

4.1.4. All components of the distribution panel shall be new and unused, of current manufacture, of the highest grade, and free of all defects and imperfections affecting performance.

4.1.5 Lighting and Distribution Panels

- All interiors shall be completely factory assembled with switching and protective devices, wire connectors, etc. All wire connectors, except screw terminals, shall be of the anti-turn solder less type and shall be suitable for copper wire of the sizes indicated.
- Interiors shall be so designed that switching and protective devices can be replaced without disturbing adjacent units and without removing the main bus connectors. It shall be possible to change circuits without machining, drilling or tapping.
- Branch circuits shall be arranged using double row construction except when narrow column panels are indicated. Branch circuits shall be numbered by the vendor.
- Doors in panel-board shall conform to the following:

  i. In making switching device handles accessible, doors shall not uncover any live parts.

  ii. Doors shall have semi-flush type, cylinder lock and catch, except that doors over 1200 mm in height shall have a vault handle and 3-point catch, complete with lock, arranged to fasten door at top, bottom and centre.

  iii. The meters and indicating lamps can be viewed without opening the doors and suitable windows shall be provided for the same.

- All Ammeters of appropriate rating, size and type along with CTs, wherever necessary, along with ON/OFF indicating lamps shall be provided on the front door of the distribution panel.

4.2 Construction Features

4.2.1 The switchboards shall be single front suitable for installation on frame or against walls. Access to all components, bus bars and cable terminations shall be from front only and boards with back access shall not be acceptable.

4.2.2 Each cubicle shall be formed using non-draw out fixed type feeder modules arranged one over the other, fed from a bus bar system and provided with cable alley. The cubicles shall be compartmentalized having distinct and separate compartments for feeder modules, bus bars and cable alleys.

4.2.3 The feeder modules shall be provided with compartment door with internal hinges. The compartment doors shall be interlocked mechanically with the operating handles/knobs of MCCB/MCBs such that the door cannot be opened when the MCCB/MCB is in 'ON' condition. Defeat feature for this interlock shall also be provided. A minimum number of two rotating knobs per door with diameter 15mm (minimum), shall be provided for all the doors.

4.2.4 All components inside the feeder compartments shall be housed on a metallic plate which shall be bolted within the compartment. All panel meters, push buttons, indicating lamps etc. shall be located on the feeder compartment doors.

4.2.5 The maximum and minimum operating heights of MCCB/MCB operating knobs shall be 1900mm and 30mm respectively.

4.2.6 Each cubicle shall have a separate cable alley. The width of this cable alley shall be sufficient to accommodate all the cables and shall provide free access for termination. Cable alleys shall be provided with suitable doors. It shall be possible to carryout maintenance work safely on cable connections to any one circuit with the bus bars and the adjacent circuits live.

4.2.7 All hardware shall be corrosion resistant. All joints and connections shall be made by galvanized, zinc passivized, or cadmium plated high tensile strength steel bolts, nuts and washers secured against loosening.

4.2.8 The switchboards shall be designed to ensure maximum safety during operation, inspection, connection of cables and maintenance. Means shall be provided to prevent shorting of power and/or control terminals due to accidental dropping of maintenance tools etc. inside the switch

board. Checking and removal of components shall be possible without disturbing adjacent components. All auxiliary devices should be easily accessible.

4.2.9 All power and control cables shall enter the switchboards from either top or bottom as specified. Necessary bolted type gland plate and Nickel/Chromium plated brass double compression cable glands for all cables entering the switchboard shall be included. Necessary arrangement for supporting the cables within the cable alley shall be provided. Terminal blocks shall not be used for supporting cables.

4.3 Bus bars, Bus bar Sizing, Connection and Supports

4.3.1 Bus bars shall be made of high conductivity electrolytic copper, supported on insulators made of non-hygroscopic, non-inflammable material. The bus bars shall extend throughout the height of switchboards and shall be of uniform cross-section. Whenever bus bars are to be extended from one cubicle to the next cubicles, the same shall be routed through a horizontal bus bar chamber.

4.3.2. Neutral bus shall have uniform dimension same as phase bus bars. Suitable tapings shall be provided for each outgoing feeder.

4.3.3 An Earth bus shall be provided and the earth bus shall have a suitable lug for each outgoing feeder.

4.3.4 The panel shall have two numbers external earth connection studs, which will be connected to earth boss bars.

4.3.5 20% spare terminals shall also be provided on each terminal block. Each panel shall have at least 20% spare feeders.

4.3.6 Bus bar taps for panels with single pole branches shall be arranged for sequence phasing of the branch circuit devices. Bus bars shall be properly insulated and supported to conform to industry standard practice governing short circuit stresses in panel boards.

4.3.7 For D.C. system, cross-sectional area of positive and negative buses shall be identical.

4.3.8 All buses, both main vertical and horizontal, all bus joints as well as the supports shall be designed to withstand the specified short circuit level for 1 second without causing permanent deformation. Dynamic stresses shall be calculated on the basis of peak short circuit current.

4.3.9 The thermal design of the bus bars shall be based on installation of the switchboard in poorly ventilated condition. The cooling air volume shall take into account only the bus bar enclosure.

4.3.10 Bus bars shall be sleeved with Fire Retardant Low Smoke (FRLS) for full voltage insulation. Identification rings of red, yellow, blue and black color to identify phase and neutral bus bars in case of A.C. and with white and black to identify positive and negative bus bars in case of D.C, shall be provided over bus bar sleeves.

4.3.11 Minimum clearance between live parts shall be 20mm. Minimum clearance between live parts/neutral to ground shall be 25mm.

4.4 Power Connections

4.4.1 The cables shall be terminated on the bus bars and at the incoming point using crimping type tinned copper lugs of required design. The cables shall enter the module compartment through FRLS bushes or grommets.

4.4.2 Power cables shall be terminated directly at the device terminals of respective modules. Necessary tinned copper lugs of a design dictated by type of terminals provided on various devices shall be included. In normal case, intermediate terminal blocks shall not be provided unless required because of limitations of device terminals. The cables shall enter the modules through FRLS bushes or grommets.

4.5 Control Wiring and Connections

4.5.1 All the modules shall be pre-wired and ready for use after external cable connection. Inside the modules, the control wiring shall be carried out using insulated copper conductors with FRLS insulation. The insulation shall be rated for minimum 600V grade irrespective of the switchboard voltage rating. The minimum size of conductor shall be 2.5mm^2. Wire ends shall be crimped with suitably sized lugs before connection.

4.5.2 Terminal blocks for external connections shall be heavy duty, Melamine, 600V grade, minimum 20A rated, break and fire resistant, spring loaded, pressure type. The terminal blocks shall be located in the cable alley near respective feeder modules. Sufficient terminals shall be provided on each terminal block to ensure that not more than one outgoing wire is connected per terminal. Minimum 20% spare terminals shall be provided on each terminal block. If required, separate terminal blocks shall be provided within the module for internal control wiring interconnections.

4.5.3 All control wiring from the module to the external terminal block shall be routed through FRLS bushes or grommets.

4.5.4 All inter-cubicle wiring between cubicles shall be included and completed before dispatch of switchboards.

4.5.5 Each wire shall be identified at both ends by low halogen plastic ferrules. The identifying wire numbers shall match with the terminal numbers of components devices.

4.6 Auxiliary Power Supply for Control, Indication

4.6.1 A.C Switchboards

The control supply should be derived from main supply deploying suitable transformer.

4.6.2 D.C. Switchboards

The control supply should be derived from main supply.

4.7 Auxiliary contacts

All Auxiliary contacts associated with auxiliary relays, switches, push buttons MCCBs, contactors etc. shall be designed to carry, make and break the rated current of devices where they are wired. In any case all auxiliary contacts shall be rated or minimum 6.0A at 240V AC, AC-15 duty and 4.0A at 110V DC, DC-13 duty.

4.8 Circuit Protection

Circuit protection shall be provided by using MCCBs/MCBs. Use of fuses shall not be permitted.

4.9 Earthing Connections

All cubicles shall be connected to copper earth bus bar running throughout the length of the switchboards. The minimum copper earth bus size shall be 50mm X 6mm. All non-current carrying metallic parts of the system shall be properly earthed. Provision shall be made to connect the earthing bus bar to the platform earthing grid at two ends. Earthing bolts shall be provided to ground cable armours.

4.10 Nameplates

4.10.1 A nameplate with the switchboard designation shall be fixed at the top of the central panel. A separate nameplate giving feeder details shall be provided for each feeder module.

4.10.2 Nameplates shall be provided for each component (indication lamps, panel meters, push buttons, switches, auxiliary relays and contactors MCCBs, MCBs, contactors etc.) mounted on the switchboard. The component numbers shall be painted inside the panel at appropriate points to give a permanent marking. Special warning plates shall be provided on all removable covers or doors giving access to cable terminations and bus bars. Special warning labels shall be provided inside the switchboard also, wherever considered necessary. Identification tags shall be provided inside the cubicle matching with those shown on the circuit diagram.

4.10.3 Engraved name plates shall preferably be of 3-ply (Black-white-black) lamicoid sheets. Engraving shall be done with square groove cutters. For individual components, anodised metal nameplate shall be acceptable. Hard paper nameplates or stickers will not be acceptable. Nameplates shall be riveted or fastened by screws and shall not be fixed by adhesives.

4.11 Space Heaters

The space heaters shall be suitable for 240V, 1 ph, 50 Hz, AC supply. The supply shall be arranged externally. Each switchboard shall have a space heater bus running throughout the length of the switchboard. A separate resistance type space heater shall be provided for each vertical cubicle, individually controlled through a MCB and adjustable setting thermostat to prevent moisture condensation and maintain cubicle temperature 5^0C above the room temperature. Wiring of space heaters shall be isolated or separately bundled from internal wiring.

4.12 Feeder details

In AC DB, each outgoing feeder shall be protected with Earth Leakage Circuit Breaker (ELCB) combined with overcurrent and short circuit element. Alternatively, separate MCB with ELCB in series shall be provided.

In AC DB, all incoming switch/circuit breaker shall have facility to isolate all three phases and neutral (4 pole).

4.13 Switchboard Components

4.13.1 Moulded Case Circuit Breakers (MCCBs)

4.13.1.1 M.C.C.B. shall be provided with spring assisted, quick make/break, manually operated, trip free mechanism. Wherever required, MCCB shall be suitable for remote tripping operation and the tripping device shall be suitable for the specified control supply voltage.

4.13.1.2 MCCB shall be provided with tripping device with inverse time characteristics for overload protection and instantaneous characteristics for short circuit protection. When used as isolators, MCCBs shall be provided without protection elements.

4.13.1.3 MCCB operating handle 'ON' and 'OFF' positions shall be displayed and the operating handle shall be mounted on the door of the compartment housing MCCB.

4.13.1.4 M.C.C.B shall be provided with minimum 2 NO + 2 NC auxiliary contacts.

4.13.1.5 MCCBs shall be rated for breaking the short circuit current specified for the switchboard. Use of back-up fuses for extending the breaking capacity shall not be acceptable. MCCBs for all outgoing feeders having MCCB and contactor shall be certified to provide type 2 coordination as per IEC.

4.12.1.6 MCCBs for D.C. switchboards shall be certified for carrying, breaking and making the required D.C. currents at the rated voltage of switchboard.

4.13.2 Miniature Circuit Breakers (MCBs)

4.13.2.1 The MCBs shall be provided with magnetic short circuit tripping and thermal overload tripping devices. The short circuit rating of MCBs shall be certified without any back up fuse. RCCB's shall be provided at all outgoing feeders.

4.13.2.2 All DB Incoming CB shall be current limiting type capable of reducing fault current as specified to be rated short circuit rating required. All outgoing MCB's shall be C curve type.

4.13.2.3 The MCBs shall be as per BS EN 60898/IEC 60898.

4.13.2.4 The MCBs shall be mounted inside the module and the operating knob shall protrude through the door of the compartment. Sealing gaskets shall be provided to make the opening in the door dust tight.

4.13.2.5 The MCBs for D.C. switchboards shall be certified for carrying, breaking and making the required D.C. currents at the rated voltage of the switchboards.

4.13.3 Contactors

4.13.3.1 The contactors shall be air break type, equipped with three main contacts and minimum 2 NO. + 2 NC auxiliary contacts.

4.13.3.1 Contactors for D.C. application shall be certified for carrying, making and breaking the required currents at the switchboard rated voltage. Paralleling or series connection of contacts to achieve required current rating shall not be acceptable.

4.13.3.2 The contactor drop off voltage shall be between 45% and 65% of the rated coil voltage.

4.13.4 Instrument Transformers

4.13.4.1 Wherever provided, the instrument transformers shall be as per IEC 61869.

4.13.4.2 Voltage transformers shall be provided with miniature circuit breakers with auxiliary contacts on the primary and secondary side.

4.13.5 Measuring Instruments

4.13.5.1 All auxiliary devices such as shunts, transducers, CTs, VTs, etc. required, shall be included in the supply of the switchboard.

4.13.5.2 All ammeters, volt meters, KW meters shall be of electronic type.

4.13.6 Control Switches

4.13.6.1 All control switches shall be rotary, back connected type, having a cam operated contact mechanism. Preferably phosphor bronze contacts shall be used on the control switches.

4.13.6.2 Ammeter selector switches shall have make before break feature on their contacts. The selector switch shall generally have 4 positions for reading 3 phase currents and fourth position for neutral current. The voltmeter selector switch shall also have 4 position. Three shall be used to measure phase to phase voltage and fourth shall be OFF position.

4.13.7 Push Buttons

Push button colors shall be as follows:

- Stop / Open/Emergency - Red.
- Start / Close - Green
- Trip Circuit Healthy Check - Blue
- Trip / Trip Reset - Amber

4.13.8 Indicating Lamps

Clustered LED type low power consumption indicating lamps with minimum 8mm diameter size shall be provided.

4.13.9 Auxiliary Relays/Contactors

Auxiliary relays/contactors shall generally be used for interlocking and multiplying contacts.

5. TESTING AND INSPECTION

5.1 During fabrication, switchboards and panels shall be subjected to inspection by Company or its authorized representative to verify that all component qualities and descriptions are compatible with the Specification requirements. Vendor shall furnish all necessary information concerning the supply to Company's inspectors.

5.2 Tests shall be carried out at the Vendor's work under his supervision and at his cost.

5.3 All routine tests as specified by the applicable standards and codes shall be conducted.

5.4 In routine tests and specified tests shall be conducted to check mechanical and electrical operations and the control wiring to specification and schematic drawings.

5.5 Acceptance tests shall be as follows:

5.5.1 A general check shall be carried out. This shall cover measurement of overall dimensions, location, number and type of devices and their ratings as per bill of materials, location and connection of terminals.

5.5.2 Manual and electrical operation of all components viz. switches, contactors, auxiliary relays etc. under various conditions of supply voltage. This shall include operational check of all circuit breakers.

5.5.3 Dry insulation test with power frequency voltage for all circuits in 'ON' position.

5.5.4 Operation checks for every control function as per the schematic diagram by manually simulating the actual operating conditions.

5.5.5 Checking of insulation resistance of the main and auxiliary circuits.

5.6 For components/devices bought from suppliers other than the distribution board vendor, certified test reports of tests carried out at the supplier's works shall be submitted. Normally all routine tests, as specified in the relevant standards, shall be conducted by the respective suppliers at their work centers.

6. SPARES

6.1 Vendor shall recommend and provide spare parts needed for start-up, testing and commissioning of the distribution board. In addition, vendor shall also furnish recommended spares for two (2) years of normal operation and maintenance. Recommended spares shall take into account the related factors of system reliability, effect of downtime upon production, safety, cost of parts and availability of service facilities.

6.2 All spares furnished by vendor shall be wrapped and packaged so that they will be preserved in original as new condition under the normal conditions of storage prevailing in 'India and shall be properly tagged and coded to facilitate future identification.

6.3 They shall be packaged separately, clearly marked as "spare parts" and shipped along with the distribution boards. Packing lists shall be furnished so that the parts can be handled without uncrating, if required.

7 . CERTIFICATION

The distribution boards and panels offered or those with similar design and construction features manufactured by the same vendor:

- Shall have been type tested by an authorized testing agency/lab viz. CPRI, ERDA etc.
- Shall be having current certification/approval/listing by UL/FM/ATEX/IECEx etc.

8. PACKING & TRANSPORTATION

The distribution boards and panels along with their attachments/accessories shall be shipped to site packed in wooden crates. They shall be wrapped with polythene sheets, before being placed in the crates to prevent damage to finish. Crates shall have skid bottom for handling.

FUNCTIONAL SPECIFICATION

FOR

ELECTRICAL CABLE GLANDS

PREPARED / REVISED BY	REVIEWED BY	APPROVED BY	TOTAL NO. OF PAGES INCLUDING THIS PAGE	DATE	REV.
KL	AK	PK	4	24.01.2022	1
BR	KR	AS	4	19-09-2016	0

1.0 SCOPE

This Specification defines the minimum requirements for design, manufacture, supply and testing of electrical cable glands and accessories for high voltage and low voltage systems for armoured and non armoured cables on the offshore process / well platforms.

2.0 CODES AND STANDARDS

2.1 Codes Standards and Regulations:

All cables, accessories and other components supplied, shall comply with the latest revisions of the applicable codes and standards.

IEC	IEC 60079.
British Standard	BS EN 50262
B I S	Bureau of Indian Standards

Further the Contractor shall ensure all mandatory Indian statutory requirements are complied with.

3.0 SITE CODITION

All the cables and accessories shall be designed to withstand the conditions specified in the General Design Criteria enclosed elsewhere in the bid package.

4.0 SCOPE OF SUPPLY

The Scope of this specification includes the following items:

4.1 The complete cable gland system including body, washer, nut, seal etc.

5.0 TECHNICAL REQUIREMENT

GENERAL:

5.1 All cable glands shall be made of brass and finishing shall be nickel plated.

5.2 Cable Glands shall be double compression type except where soft bedded cables i.e. typically fire resistant are used. For such cables the sealing method should be chosen to avoid cold flow. Examples of such types are displacement and diaphragm types.

5.3 To meet the ingress protection requirement the space between cable glands, adapters and blanking elements and the enclosure shall be sealed by means of a sealing washer or thread sealant.

5.4 The cable gland shall be selected to match the cable diameter. The use of sealing tape, heat shrink tube or other materials is not permitted to make the cable fit to the cable gland.

FOR CLASSIFIED AREA:

5.5 Cable glands, when installed shall not invalidate the specific characteristics of the type of protection of the electrical equipment on which they are mounted.

5.6 Cable glands shall be in accordance with IEC 60079-0 and shall be selected to maintain the requirements of the protection technique according to Table 10 of IEC 60079-14.

5.7 Where glands are used for unarmored cables in a hazardous area, care should be taken to ensure that they are able to fulfil the requirements of IEC60079-0. Where the product has limitations denoted by an X on the certificate, additional measures should be taken to secure the cable.

5.8 The cable entry system shall comply with one of the following for Ex ‘d’ equipment:

a) Cable glands sealed with setting compound (barrier cable glands) in compliance with IEC 60079-1 and certified as equipment;

b) Cables glands with IEC 60079-1 and are certified as equipment

5.9 Cables glands and accessories shall be suitable for operations without periodic maintenance applied throughout the life span of the equipment.

5.10 **Units and information.**

All quantities and dimensions shall be expressed in metric units. All information, manual, certificates, data and inscriptions shall be in the English language.

6. INSPECTION AND TESTING

(a) Test certificates for all cable glands shall be provided to the Company.

(b) Random inspection of cable glands installed at yard or site shall be carried by company or authorized representative.

7. CERTIFICATION

All cables glands and gland accessories of similar design and construction features manufactured by the same Vendor:

a) Shall have been type tested by an authorized testing agency/lab viz. CPRI, ERDA etc.

b) Shall be having current certification/approval/listing by UL/FM/ATEX/IECEx etc.

INSPECTION REQUIREMENT TABLE (IRT)

WHRU REPLACEMENT PROJECT

VOLUME – IIIB

OIL AND NATURAL GAS CORPORATION LIMITED INDIA

ONGC	Offshore Design Section Engineering Services ISO – 9001:2008	LIST OF IRTs (INSPECTION REQUIREMENT TABLE) & APPROVAL	Date	06.01.2017
			Discipline	ALL
			Page: *1 OF 1*	

Index of IRT

Sl. No.	Discipline	IRT No.	Nos. of IRT	Rev. No.	Rev. date
1	Electrical IRTs	ODS/ELE/IRT/01 to 21	21	1	06.01.2017
2	Instrumentation IRTs	ODS/INST/IRT/001 to 8,9A,9B,10A,10B, 11A,11B,12A,12B, 13-43	47	1	22.12.2016
3	Structure IRTs	ODS/STR/IRT/01 to 9, 9A,10 to 12, 12A	14	1	18.11.2016
4	Pipeline IRTs	ODS/PIPELINE/IRT/01 to 20	20	0	08.03.2016
5	Mechanical IRTs	ODS/MECH/IRT/01 to6,8to14,14B,14A ,15 to25, 27-34,29M,36,38,40to 52, S-01to3,4,8to10	57	0	08.03.2016
6	Piping IRTs	ODS/PPG/IRT/01 to 25	25	0	08.03.2016
		Total nos. of IRT=	**184**		

Subject: Explanation of common Legends & Notes

1.0 Definition of Inspection categories A, B , C & BULK

1.1 Inspection Category : "A":

i) At Vendor's Place:-

a) ONGC/CA and Contractor/Contractor's IA shall carry out appropriate stage as well as Final Inspection as per approved ITP/QAP and issue IR/IRN.

b) ONGC/CA shall either issue their separate IR/IRN or will endorse the IR/IRN issued by Contractor/Contractor's Inspection Agency.

AND

ii) At Fabrication Yard/ Offshore Installation:-

a) Material received at Yard shall be verified by ONGC appointed TPI/CA with respect to Tag / Marking / Identification and IR/IRN etc.

b) IR/IRN shall be submitted to ONGC's TPI & CA for IMIR /GIIR clearance.

1.2 Inspection Category : "B":

i) At Vendor's Place :-

a) ONGC / CA shall carry out Final Stage Inspection at Vendor's place..

b) Contractor/Contractor's IA shall carry out Appropriate Stage as well as Final Inspection as per approved ITP/QAP.

c) ONGC/CA shall either issue their separate IR/IRN or will endorse the IR/IRN issued by Contractor IA.

AND

ii) At Fabrication Yard/Offshore Installation :

a) Material received at Yard shall be verified by ONGC appointed TPI/CA with respect to Tag / Marking / Identification and IR/IRN etc.

b) IR/IRN shall be submitted to ONGC's TPI & CA for IMIR /GIIR clearance.

1.3 Inspection Category : "C":

i) At Vendor's Place :

a) Contractor/Contractor's IA shall carry out the Final Inspection as per the approved ITP / QAP and issue IR/IRN.

AND

ii) At Fabrication Yard /Offshore Installation:

a) Material received at yard shall be verified by ONGC appointed TPI / CA with respect to Tag / Marking / Identification and IR/IRN etc. In case of Random Inspection, it shall be done as per guide lines of RW.

b) IR/IRN with Backup Documents shall be submitted to ONGC's TPI & CA for IMIR /GIIR clearance.

1.4 Inspection Category : "Bulk":

i) At Vendor's Place :

a) Contractor /Contractor IA shall carry out Inspection / review the manufacturer test certificate and issue IR/IRN.

AND

ii) At Fabrication Yard/Offshore Installation :

a) Material received at yard shall be verified by ONGC appointed CA & TPI with respect to Tag / Marking / Identification etc. In case of Random Inspection, it shall be done as per guide lines of RW.

b) IR/IRN with back up documents shall be submitted to ONGC's TPI & CA for IMIR /GIIR clearance.

2.0 Legends:

a) CA- Certification Agency appointed by ONGC

b) TPI- Third Party Agency appointed by ONGC

c) Contractor IA- Contractor's Inspection agency, appointed by the LSTK Contractor

d) ITP / QCP/QAP - Inspection & Test Plan / Quality Control Plan/Quality Assurance Plan

e) IRT - Inspection Requirement Table.

f) IR/IRN - Inspection Report/ Inspection Release Note.

g) IMIR/GIIR-Inward Material Inspection Report/Goods Inward Material Inspection.

h) I- information.

i) A – Approval.

j) R – Review.

k) Rw or RW - Random Witness Inspection

l) W- Witness Inspection.

m) R/W- Review & Witness Inspection.

n) X-Submission of Supporting Documents during review at any stage.

o) Is- Issue of documents like Inspection Release Note (IRN)/report etc.

p) FAT - Factory Acceptance Test

q) SAT – Site Acceptance Test

3.0 Explanation of terminology used in ITPs, viz. RANDOM WITNESS 'HOLD INSPECTION', WITNESS.

i) Rw or RW: Random WITNESS (Inspection)

a) Sampling percentage shall be specified as minimum 10% and shall do marking (Metal/Rubber stamping) & serial nos. or lot no. shall be logged in IR/IRN.
b) Any non-conformances (NC) or discrepancies observed during the inspection of 1st lot of 10%, then 2nd lot of next 20% shall be inspected, further if any NC observed then all the 100% shall be inspected.
c) Vendor will raise notification for the timing of Inspection / Test. In case CA doesn't visit within specified time of the agreed schedule, vendor may proceed with Inspection & further work in presence of Contractor /Contractor IA. Record of inspection will be submitted to CA for review.

ii) H – Hold (Inspection):

a) Vendor shall give 5 working days (as applicable) advance notification in case of Inspection in India and 10 working days in case of Inspection in abroad to Inspection agency (Contractor /Contractor IA and CA) as specified in approved ITP. Vendor shall ensure readiness of Internal 'QAD / Factory' Inspection reports.
b) Vendor shall not proceed with further operation without clearance from Contractor / Contractor IA (or) waiver from the Inspection agency for whom the 'hold inspection' point is indicated i.e. Contractor / Contractor IA / Company CA as applicable. In case waiver is obtained, then IR/IRN shall be issued based on review of Inspection report of that Inspection stages.

iii) W – Witness (100% inspection)

a) Vendor shall give 5 working days (as applicable) advance notification in case of Inspection in India and 10 working days in case of Inspection in foreign to Inspection agency (Contractor /Contractor IA and Company CA) as specified in approved ITP. Vendor shall ensure readiness of Internal 'QAD / Factory' Inspection reports/ Release note.
b) In case Certifying agency does not visit within the specified time of the agreed schedule, vendor may proceed with the Inspection and for further operations in presence of Contractor / Contractor IA. Record of Inspection carried out by vendor and Contractor / Contractor IA shall be provided to CA for review and for obtaining the Release Note.

4.0 General NOTES:

a) Note-1: Contractor/Contractor IA shall carry out Inspection and/or review the Documents as per approved ITP/QAP and prepare the Final Release Note. Contractor shall opt for ONGC empanelled Inspection agency as Contractor IA , but will exclude the agencies appointed by ONGC as their CA & TPI for that particular project.

b) **Note-2:** For ASME Coded vessel Fabrication, ASME AI (Authorized Inspector) will carry out Inspection as per code requirements. Contractor/Contractor IA shall carry out Inspection as per ITP/QAP.

c) **Note-3:** Random Inspection as per guide lines of RW may be carried out by CA for Inspection of Category C & Bulk items, if required as and when specified in IRT/QAP.

d) **Note 4:** At the time of inspection for category A, B or C, if any additional test required shall be carried out as per referred standard, mentioned in FS apart from IRT.

e) **Note 5:** This IRT is issued to provide extensive guidelines for preparation of ITP/QAP.

f) **Note 6:** This IRT is for the inspection by the above mentioned inspection agencies. Any class / statutory body inspection wherever required / applicable, shall be in addition to this.

g) **Note 7:** For all the bulk category items, the documentation (MTC, Test Certificate/ Report/ FAT, IRN, etc) shall be submitted by contractor to Company for review and record, prior to issue of IMIR/GIIR (Except for Bulk items pertaining to Piping Discipline)

h) **Note 8:** Material of any category shall be used by contractor only after clearance by ONGC/Certification Agency (CA) of IMIR/GIIR against complete documentation (MTC, Test Certificate/ Report/FAT, IRN, etc).

Prepared / Revised By	Reviewed By	Approved By
G. Jana	M.R. Shete	S.C.Jain

	Offshore Design Section Engineering Services ISO – 9001:2008	LIST OF IRTs (INSPECTION REQUIREMENT TABLE) & APPROVAL	Date	06/01/2017
			Discipline	ELECTRICAL
			Page: *1 OF 1*	

Sl No	Item	IRT No	Rev No	Category
1	AC DC Distribution Board/Lighting and Power Distribution Board	ODS/ELE/IRT/01	1	C
2	Battery-Battery Charger	ODS/ELE/IRT/02	1	B
3	CCTV	ODS/ELE/IRT/03	1	C
4	HV Switch Gear	ODS/ELE/IRT/04	1	B
5	Lighting Fixture, Junction Box (For Hazardous area /safe area)	ODS/ELE/IRT/05	1	C
6	Lighting Transformer	ODS/ELE/IRT/06	1	C
7	L V Switchgear	ODS/ELE/IRT/07	1	B
8	Electric Motor (Above 1 kV)	ODS/ELE/IRT/08	1	B
9	Electric Motor (less than 1 kV)	ODS/ELE/IRT/09	1	C
10	Paging and intercom system	ODS/ELE/IRT/10	1	B
11	Power and Distribution Transformer	ODS/ELE/IRT/11	1	B
12	Radio system	ODS/ELE/IRT/12	1	C
13	Sacrificial Anode	ODS/ELE/IRT/13	1	B
14	SOLAR ELECTRIC POWER SYSTEM(Including Lead acid Battery)	ODS/ELE/IRT/14	1	B
15	Subsea Cable	ODS/ELE/IRT/15	1	A
16	Surface Electrical Cables	ODS/ELE/IRT/16	1	C
17	Synchronous Generator	ODS/ELE/IRT/17	1	B
18	UPS System (Including NiCd Battry)	ODS/ELE/IRT/18	1	B
19	Navigational Aids System	ODS/ELE/IRT/19	1	C
20	Heat Tracing System	ODS/ELE/IRT/20	1	C
21	Miscellaneous Bulk Item	ODS/ELE/IRT/21	1	Bulk

Prepared / Revised By	Reviewed By	Approved By
06-01-2017	06/1/17	6/1/2017

ओएनजीसी ONGC	Offshore Design Section Engineering Services (ISO – 9001:2008)	INSPECTION REQUIREMENT TABLE	IRT No. ODS/ELE/IRT/01 Rev. No. 1 Discipline ELECTRICAL Inspection Category: C

Item: (1) AC DC Distribution Board/Panel
(2) Lighting and Power Distribution Board/Panel
(3) Hazardous Area Lighting Board/Panel

Activity No	1. Inspection by ONGC /Certification Agency (CA)	2. Inspection by ONGC /Third Party Inspector (TPI)	3. Inspection by EPC / EPC's Inspection Agency (IA)	4. Inspection by Vendor/ Sub vendor	5. Certificates/compliance/Data/Information to be submitted by vendor for Review/ Approval	6. Stages of Inspection
						General & documents- For Review/Approval /Information
1	A		R	R	X	QA Plan/ Inspection and Test Plan (All tests as per FS 4004 / FS 4035) & FAT Procedure
2	R		R	R	X	Report of Tests: Routine Test, Type Test, Test certificate as per the requirement of FS 4004, 4035, Test certificate for Major Bought out components, test certificate for enclosure class. Surface preparation and Coating etc.
3	R		R	R	X	Bill of Material Check, Functional check including interlocks, Control and Protection Devices, Visual indication / Alarms, Space Heater, Thermostat, Wiring check as per approved schematic drawings.
						Inspection & Testing- For Witness/ Random Witness
4	-		RW	W	X	Visual inspection, Dimensional check, Workmanship Check including Accessories, Name plate, Paint Shade, Earthing, Wire size, Bus Bar Size / Clearance, Cable Entry etc.,
						IRN For issue by CA/TPI/Contractor IA
5	-		Is	H	X	Issue & Documentation at Vendor Place
						IMIR/GIIR at Yard/Offshore
6	RW	RW		H	X	Verification of items as per IRN
7	Is	R			X	IMIR/GIIR on the basis of IRN

LEGENDS & NOTES: Explained separately

ओएनजीसी ONGC	Offshore Design Section Engineering Services (ISO – 9001:2008)	INSPECTION REQUIREMENT TABLE	IRT No. ODS/ELE/IRT/02 Rev. No. 1 Discipline ELECTRICAL Inspection Category: B

Item: Battery and Battery Charger (Packaged Item)

Activity No	1. Inspection by ONGC / Certification Agency (CA)	2. Inspection by ONGC / Third Party Inspector (TPI)	3. Inspection by EPC / EPC's Inspection Agency (IA)	4. Inspection by Vendor/ Sub vendor	5. Certificates/compliance/Data/Information to be submitted by vendor for Review/ Approval	6. Stages of Inspection
						General & documents- For Review/Approval /Information
1	A		R	R	X	QA Plan/ inspection and Test Plan (ITP) (To include tests as per IEC 62040, IEEE and FS 4023) & FAT Procedure
2	R		R	R	X	Report of Tests: Routine Test, Type Test, Test certificates as per the requirement of IEC 62040, IEEE and FS 4023, Capacity and load cycle test for battery, Surface preparation and Coating etc.
3	R		R	R	X	Review of Material Test Certificates (As applicable) for Major Bought out components, test certificate for enclosure class.
						Inspection & Testing- For Witness/ Random Witness
4	W		W	W	X	Visual & Dimension Check, Workmanship, Components arrangement, Name Plate, interconnection cable check, Physical Cell marking, polarity, battery charging and discharging test report.
						Functional tests
5	W		W	W	X	Burn out test for 100 hrs.
6	W		W	W	X	Functional tests for all controls and alarms for correct setting and operation.
7	W		W	W	X	Insulation resistance test of all wiring
						Routine Test
8	W		W	W	X	As per IEC 62040, IEEE and FS 4023
						IRN For issue by CA/TPI/Contractor IA
9	Is		R	H	X	Issue & Documentation at Vendor Place
						IMIR/GIIR at Yard/Offshore
10	W	W		H	X	Verification of items as per IRN
11	Is	R			X	IMIR/GIIR on the basis of IRN

LEGENDS & NOTES : Explained separately

ओएनजीसी ONGC	Offshore Design Section Engineering Services (ISO – 9001:2008)	INSPECTION REQUIREMENT TABLE	IRT No. ODS/ELE/IRT/03 Rev. No. 1 Discipline ELECTRICAL Inspection Category: C

Item: CCTV

Activity No	1. Inspection by ONGC / Certification Agency (CA)	2. Inspection by ONGC / Third Party Inspector (TPI)	3.Inspection by EPC / EPC's Inspection Agency (IA)	4. Inspection by Vendor/ Sub vendor	5 Certificates/compliance/Data/Information to be submitted by vendor for Review/ Approval	6. Stages of Inspection
						General & documents- For Review/Approval /Information
1	A	-	R	H	X	QA Plan/ Inspection and Test Plan (To include all tests as per FS4032)
2	R	-	R	H	X	Procedures- Reports of Tests: Type test, Hazardous area classification certificates as applicable.
3	R	-	R	H	X	Review of Material Test Certificates(MTC), conformance / compliance certificate, test reports etc for all major bought out components/ items as listed in QAP.
						Inspection & Testing- For Witness/ Random Witness
4	-	-	W	W	X	Visual inspection, Dimensional check, Name plate, Workman ship,
						Routine Test
5	-	-	W	W	X	Complete system check including software and Pan and Zoom check
						IRN For issue by CA/TPI/Contractor IA
6	-	-	Is	H	X	Issue & Documentation at Vendor Place
						IMIR/GIIR at Yard/Offshore
7	W	W	-	H	X	Verification of items and all test reports as per IRN
8	Is	R			X	IMIR/GIIR on the basis of IRN

LEGENDS & NOTES : Explained separately

ओएनजीसी ONGC	Offshore Design Section Engineering Services (ISO – 9001:2008)	INSPECTION REQUIREMENT TABLE	IRT No. ODS/ELE/IRT/04 Rev. No. 1 Discipline ELECTRICAL Inspection Category: B

Item: HT SWITCH GEAR

Activity No	1. Inspection by ONGC /Certification Agency (CA)	2. Inspection by ONGC / Third Party Inspector (TPI)	3.Inspection by EPC / EPC's Inspection Agency (IA)	4. Inspection by Vendor/ Sub vendor	5. Certificates/compliance/Data/Information to be submitted by vendor for Review/ Approval	6. Stages of Inspection
						General & documents- For Review/Approval /Information
1	A	-	R	H	X	QA Plan/ Inspection and Test Plan as per IEC 62271& FAT Procedure
2	R	-	R	H	X	Reports of Tests- Type Test, Surface preparation & coating etc. Ingress Protection (IP)
3	R	-	R	H	X	Review of Material Test Certificates, conformance / compliance certificate, test reports etc for all major bought out components/ items as listed in QAP.
						Inspection and Testing
4	W	-	W	W	X	Visual inspection, Dimensional check, Name plate, Workman ship,
						Routine Test
5	W	-	W	W	X	As per IEC 62271.
						IRN For issue by CA/TPI/Contractor IA
6	Is	-	R	H	X	Issue & Documentation at Vendor Place
						IMIR/GIIR at Yard/Offshore
7	W	W		H	X	Verification of items as per IRN
8	Is	R			X	IMIR/GIIR on the basis of IRN

LEGENDS & NOTES : Explained separately

ओएनजीसी ONGC	**Offshore Design Section Engineering Services (ISO – 9001:2008)**	**INSPECTION REQUIREMENT TABLE**	**IRT No.** ODS/ELE/IRT/05 **Rev. No.** 1 **Discipline** ELECTRICAL **Inspection Category: C**

Item: Lighting Fixture, Junction Box (For Hazardous area /safe area)

Activity No	1. Inspection by ONGC / Certification Agency (CA)	2. Inspection by ONGC / Third Party Inspection (TPI)	3. Inspection by EPC / EPC's Inspection Agency (IA)	4. Inspection by Vendor/ Sub vendor	5. Certificates/compliance/Data/Information to be submitted by vendor for Review/ Approval	6. Stages of Inspection
						General & documents- For Review/Approval /Information
1	A		R	H	X	QA Plan/ Inspection and Test Plan to include FS 4006, 4010, 4012, 4028 as applicable & FAT Procedure.
2	R		R	H	X	Reports of Tests – Type Test, Routine Test, FAT, Test certificate for area classification as applicable, Ingress protection, Surface preparation & coating etc.
3	R		R	H	X	Review of Material Test Certificates including interlocks, Control and Protection Devices etc.
						Inspection & Testing- For Witness/ Random Witness
4	-		W	W	X	Visual inspection, Dimensional check, Workmanship Check including Accessories, Name plate, Paint Shade, Earthing, Wire size, Clearance, Cable Entry etc.,
						IRN For issue by CA/TPI/Contractor IA
5	-		Is	H	X	Issue & Documentation at Vendor Place
						IMIR/GIIR at Yard/Offshore
6	W	W		H	X	Verification of items along with all test reports as per IRN
7	Is	R			X	IMIR/GIIR on the basis of IRN

LEGENDS & NOTES : Explained separately

ओएनजीसी ONGC	Offshore Design Section Engineering Services (ISO – 9001:2008)	INSPECTION REQUIREMENT TABLE	IRT No. ODS/ELE/IRT/06 Rev. No. 1 Discipline ELECTRICAL Inspection Category: C

Item: Lighting Transformer

Activity No	1. Inspection by ONGC / Certification Agency (CA)	2. Inspection by ONGC / Third Party Inspector (TPI)	3.Inspection by EPC / EPC's Inspection Agency (IA)	4. Inspection by Vendor/ Sub vendor	5. Certificates/compliance/Data/Information to be submitted by vendor for Review/ Approval	6. Stages of Inspection
						General
1	A	-	R	H	X	QA Plan/ Inspection and Test Plan (FS 4009) & FAT Procedure.
2	R	-	R	H	X	Reports of Tests – Type Tests, FAT, Calibration of test equipment.
3	R	-	R	H	X	Review of Material Test Certificates (MTC), conformance / compliance certificate, test reports etc. for all major bought out components/ items as listed in QAP.
						Inspection and Testing
4	-	-	W	W	X	Visual inspection, Dimensional check, Name plate, Workman ship,
						Routine Test
5	-		W	W	X	As per FS 4009
						IRN For issue by CA/TPI/Contractor IA
6	-	-	Is	H	X	Issue & Documentation at Vendor Place
						IMIR/GIIR at Yard/Offshore
7	W	W		H	X	Verification of items along with all test reports as per IRN
8	Is	R			X	IMIR/GIIR on the basis of IRN

LEGENDS & NOTES : Explained separately

ओएनजीसी ONGC	Offshore Design Section Engineering Services (ISO – 9001:2008)	INSPECTION REQUIREMENT TABLE	IRT No. ODS/ELE/IRT/07 Rev. No. 1 Discipline ELECTRICAL Inspection Category: B

Item: L T Switchgear

Activity No	1. Inspection by ONGC / Certification Agency (CA)	2. Inspection by ONGC / Third Party Inspector (TPI)	3. Inspection by EPC / EPC's Inspection Agency (IA)	4. Inspection by Vendor/ Sub vendor	5. Certificates/compliance/Data/Information to be submitted by vendor for Review/ Approval	6. Stages of Inspection
						General
1	A		R	H	X	QA Plan/ Inspection and Test Plan (All tests as per FS 4013 and IEC 60947) & FAT Procedure.
2	R		R	H	X	Reports of Tests: Type test, FAT.
3	R		R	H	X	Review of Material Test Certificates - interlocks, Control and Protection Devices, Visual indication / Alarms, Space Heater etc.
						Inspection and Testing
4	W		W	W	X	Visual inspection, Dimensional check, Workmanship Check including Accessories, Name plate, Paint Shade, Earthing, Wire size, Bus Bar Size / Clearance, Cable Entry etc.,
						Acceptance Test
5	W		W	W	X	As per FS 4013
						Routine Test
6	W		W	W	X	As per IEC 60947..
						IRN For issue by CA/TPI/Contractor IA
7	Is		R	H	X	Issue & Documentation at Vendor Place
						IMIR/GIIR at Yard/Offshore
8	W	W		H	X	Verification of items as per IRN
9	Is	R			X	IMIR/GIIR on the basis of IRN

LEGENDS & NOTES : Explained separately

ओएनजीसी ONGC	Offshore Design Section Engineering Services (ISO – 9001:2008)	INSPECTION REQUIREMENT TABLE	IRT No. ODS/ELE/IRT/08 Rev. No. 1 Discipline ELECTRICAL Inspection Category: B

Item: ELECTRIC MOTOR (Above 1 kV)

Activity No	1. Inspection by ONGC / Certification Agency (CA)	2. Inspection by ONGC / Third Party Inspector (TPI)	3.Inspection by EPC / EPC's Inspection Agency (IA)	4. Inspection by Vendor/ Sub vendor	5. Certificates/compliance/Data/Information to be submitted by vendor for Review/ Approval	6. Stages of Inspection
						General & documents- For Review/Approval /Information
1	A	-	R	H	X	QA Plan/ Inspection and Test Plan as per FS4008 and IEC 60034 & FAT Procedure.
2	R	-	R	H	X	Procedures - FAT Procedure, Reports of Test – Type Tests, test certificates including hazardous area classification/ enclosure protection as applicable.
3	R	-	R	H	X	Review of Material Test Certificates (MTC), conformance / compliance certificate, test reports etc. for all major bought out components/ items as listed in QAP.
						Inspection & Testing- For Witness/ Random Witness
4	W	-	W	H	X	Visual inspection, Dimensional check, Name plate, Workman ship,
						Routine Test as per IEC 60034 including the following
5	W		W	H	X	Resistance measurement of windings
6	W		W	H	X	Resistance measurement of temperature detectors
7	W		W	H	X	Resistance measurement of heater
8	W	-	W	H	X	No load loss and no load current measurement
9	W		W	H	X	Short circuit test
10	W		W	H	X	High voltage test
11	W		W	H	X	Insulation Resistance Test
12	W	-	W	H	X	Vibration measurement
						IRN For issue by CA/TPI/Contractor IA
13	Is	-	R	H	X	Issue & Documentation at Vendor Place
						IMIR/GIIR at Yard/Offshore
14	W	W		H	X	Verification of items as per IRN
15	Is	R			x	IMIR/GIIR on the basis of IRN

LEGENDS & NOTES : Explained separately

ओएनजीसी ONGC	Offshore Design Section Engineering Services (ISO – 9001:2008)	INSPECTION REQUIREMENT TABLE	IRT No. ODS/ELE/IRT/09 Rev. No. 1 Discipline ELECTRICAL Inspection Category: C

Item: ELECTRIC MOTOR (less than 1 kV)

Activity No	1. Inspection by ONGC / Certification Agency (CA)	2. Inspection by ONGC / Third Party Inspector (TPI)	3.Inspection by EPC / EPC's Inspection Agency (IA)	4. Inspection by Vendor/ Sub vendor	5. Certificates/compliance/Data/Information to be submitted by vendor for Review/ Approval	Stages of Inspection
						General & documents- For Review/Approval /Information
1	A	-	R	H	X	QA Plan/ Inspection and Test Plan as per FS4008 and IEC 60034 & FAT Procedure.
2	R	-	R	H	X	Reports of Test – Type Tests, FAT, test certificates for hazardous area classification/ enclosure protection as applicable.
3	R	-	R	H	X	Review of Material Test Certificates (MTC), conformance / compliance certificate, test reports etc for all major bought out components/ items as listed in QAP.
						Inspection & Testing- For Witness/ Random Witness
4	-	-	W	W	X	Visual inspection, Dimensional check, Name plate, Workman ship,
						Routine Test
5	-		W	W	X	Resistance measurement of windings
6	-		W	W	X	Resistance measurement of heater (As applicable)
7	-	-	W	W	X	No load loss and no load current measurement
8	-		W	W	X	Short circuit test
9	-		W	W	X	Insulation Resistance Test
						IRN For issue by CA/TPI/Contractor IA
10	-	-	Is	H	X	Issue & Documentation at Vendor Place
						IMIR/GIIR at Yard/Offshore
11	W	W		H	X	Verification of items along with all test reports as per IRN
12	Is	R			X	IMIR/GIIR on the basis of IRN

LEGENDS & NOTES : Explained separately

ओएनजीसी ONGC	Offshore Design Section Engineering Services (ISO – 9001:2008)	INSPECTION REQUIREMENT TABLE	IRT No. ODS/ELE/IRT/10 Rev. No. 1 Discipline ELECTRICAL Inspection Category: B

Item: Paging and intercom system

Activity No	1. Inspection by ONGC / Certification Agency (CA)	2. Inspection by ONGC / Third Party Inspector (TPI)	3.Inspection by EPC / EPC's Inspection Agency (IA)	4. Inspection by Vendor/ Sub vendor	5. Certificates/compliance/Data/Information to be submitted by vendor for Review/ Approval	6. Stages of Inspection
						General
1	A		R	H	X	QA Plan/ Inspection and Test Plan (All tests as per FS 4036) & FAT Procedure.
2	R		R	H	X	Reports of Tests – Type tests, FAT, Type test certification and approval/Listing by approved agencies or UL/FM, Hazardous area certification and IP rating as per data sheet.
3	R	-	R	H	X	Review of Material Test Certificates (MTC), conformance / compliance certificate, test reports etc for all major bought out components/ items as listed in QAP.
						Inspection and Testing
4	W	-	W	W	X	Visual inspection, Dimensional check, Name plate, Workman ship,
						Routine Test
5	W		W	W	X	Functional test with all devices interconnected to verify system operation
						IRN For issue by CA/TPI/Contractor IA
6	Is		R	H	X	Issue & Documentation at Vendor Place
						IMIR/GIIR at Yard/Offshore
7	W	W		H	X	Verification of items as per IRN
8	Is	R			X	IMIR/GIIR on the basis of IRN

LEGENDS & NOTES : Explained separately

ओएनजीसी ONGC	Offshore Design Section Engineering Services (ISO – 9001:2008)	INSPECTION REQUIREMENT TABLE	IRT No. ODS/ELE/IRT/11 Rev. No. 1 Discipline ELECTRICAL Inspection Category: B

Item: Power and Distribution Transformer

Activity No	1. Inspection by ONGC / Certification Agency (CA)	2. Inspection by ONGC / Third Party Inspector (TPI)	3.Inspection by EPC / EPC's Inspection Agency (IA)	4. Inspection by Vendor/ Sub vendor	5. Certificates/compliance/Data/Information to be submitted by vendor for Review/ Approval	Stages of Inspection
						General & documents- For Review/Approval /Information
1	A	-	R	H	X	QA Plan/ Inspection and Test Plan (All Tests as per IEC 60076-11, FS 4042) & FAT Procedure.
2	R	-	R	H	X	Reports of Tests – Type Tests, FAT, Calibration of test equipment.
3	R	-	R	H	X	Review of Material Test Certificates (MTC), conformance / compliance certificate, test reports etc for all major bought out components/ items as listed in QAP.
						Inspection & Testing- For Witness/ Random Witness
4	W	-	W	W	X	Visual inspection, Dimensional check, Name plate, Workman ship,
						Routine Test
5	W		W	W	X	As per IEC 60076-11
						Acceptance Tests as per FS 4042 including the following
6	W		W	W	X	Polarization index test as per ANSI/IEEE
7	W		W	W	X	Noise level Test
						IRN For issue by CA/TPI/Contractor IA
8	Is	-	R	H	X	Issue & Documentation at Vendor Place
						IMIR/GIIR at Yard/Offshore
9	W	W		H	x	Verification of items as per IRN
10	Is	R			x	IMIR/GIIR on the basis of IRN

LEGENDS & NOTES : Explained separately

ओएनजीसी ONGC	Offshore Design Section Engineering Services (ISO – 9001:2008)	INSPECTION REQUIREMENT TABLE	IRT No. ODS/ELE/IRT/12 Rev. No. 1 Discipline ELECTRICAL Inspection Category: C

Item: Radio system

Activity No	1. Inspection by ONGC / Certification Agency (CA)	2. Inspection by ONGC / Third Party Inspector (TPI)	3.Inspection by EPC / EPC's Inspection Agency (IA)	4. Inspection by Vendor/ Sub vendor	5. Certificates/compliance/Data/Information to be submitted by vendor for Review/ Approval	6. Stages of Inspection
						General & documents- For Review/Approval /Information
1	A	-	R	H	X	QA Plan/ Inspection and Test Plan as per FS 4037.
2	R	-	R	H	X	Reports of Tests – Type test (Electromagnetic compatibility), Hazardous area classification as per applicability.
3	R	-	R	H	X	Type approval certificates for GMDSS/SOLAS/ICAO/FCC/CCIR/CCITT/ITU/FAA/IEC pertaining to relevant Radio systems.
4	R	-	R	H	X	Review of Material Test Certificates (as applicable)
						Inspection and Testing
5	-	-	W	W	X	Visual inspection, OEM documents and technical literature.
						Routine Test
6	-		W	W	X	Functional test
						IRN For issue by CA/TPI/Contractor IA
7	Is	-	R	H	X	Issue & Documentation at Vendor Place
						IMIR/GIIR at Yard/Offshore
8	W	W		H	X	Verification of items as per IRN
9	Is	R			X	IMIR/GIIR on the basis of IRN

LEGENDS & NOTES : Explained separately

ओएनजीसी ONGC	Offshore Design Section Engineering Services (ISO – 9001:2008)	INSPECTION REQUIREMENT TABLE	IRT No. ODS/ELE/IRT/13 Rev. No. 1 Discipline ELECTRICAL Inspection Category: B

Item: Sacrificial Anode (Cathodic Protection System)

Activity No	1. Inspection by ONGC / Certification Agency (CA)	2. Inspection by ONGC / Third Party Inspector (TPI)	3.Inspection by EPC / EPC's Inspection Agency (IA)	4. Inspection by Vendor/ Sub vendor	5. Certificates/compliance/Data/Information to be submitted by vendor for Review/ Approval	6. Stages of Inspection
						General & documents- For Review/Approval /Information
1	A	-	R	H	X	QA Plan/ Inspection and Test Plan (To include tests as per DNV 401B, FS 4001/ 4002) & FAT Procedure.
2	R	-	R	H	X	Reports of Test – Type test (As per DNV including Chemical composition tests), FAT.
3	R	-	R	H	X	Review of Material Test Certificates (MTC), conformance / compliance certificate, test reports etc for all major bought out components/ items as listed in QAP.
						Inspection & Testing- For Witness/ Random Witness
4	W	-	W	W	X	Visual inspection, Dimensional check, Weighing, Packaging, Workman ship,
						Acceptance Test as per applicable FS 4001/4002 including the following
5	W	-	W	W	X	Performance Tests (Potential and capacity)
6	W	-	W	W	X	Destructive tests as per FS 4001/4002 or nondestructive radiography. (At least one anode per delivery or at least 0.5 percent of the anodes shall be subjected to destructive testing)
7	W	-	W	W	X	Electrical continuity test between anode and connector (should be less than 0.005 ohm)
						Routine Test
8	W		W	W	X	As per DNV 401B
						IRN For issue by CA/TPI/Contractor IA
9	Is	-	R	H	X	Issue & Documentation at Vendor Place
						IMIR/GIIR at Yard/Offshore
10	W	W		H	X	Verification of items as per IRN
11	Is	R			X	IMIR/GIIR on the basis of IRN

LEGENDS & NOTES : Explained separately

ओएनजीसी ONGC	Offshore Design Section Engineering Services (ISO – 9001:2008)	INSPECTION REQUIREMENT TABLE	IRT No. ODS/ELE/IRT/14 Rev. No. 1 Discipline ELECTRICAL Inspection Category: B

Item: SOLAR ELECTRIC POWER SYSTEM (INCLUDING LEAD ACID BATTERY)

Activity No	1. Inspection by ONGC / Certification Agency (CA)	2. Inspection by ONGC / Third Party Inspector (TPI)	3.Inspection by EPC / EPC's Inspection Agency (IA)	4. Inspection by Vendor/ Sub vendor	5. Certificates/compliance/Data/Information to be submitted by vendor for Review/ Approval	6. Stages of Inspection involved
						General & documents- For Review/Approval /Information
1	A	-	R	H	X	QA Plan/ Inspection and Test Plan including FS-4007 A, IEC 61215 & FAT Procedure.
2	R	-	R	H	X	Reports of Tests – Type Tests as per FS 4007 A and IEC 61215 including Enclosure Class, Hazardous Area classification(as applicable), Type tests of battery as per FS 4007A, Capacity and load cycle test for battery.
3	R	-	R	H	X	Review of Material Test Certificates (as applicable). Internal test report, all test certificates/components certificates/Manufacturer reports from all major bought out components & accessories(as applicable)
						Inspection and Testing
4	W	-	W	W	X	Final Visual inspection, Dimensional check,Tag plate/Name plate, Workman ship,Earthing Point Check, Quality & quantity check,rating check, Accessories check(As applicable)
						Routine Tests
5	W	-	W	W	X	As per FS 4007 A and IEC 61215 for solar system IEEE standard for Battery.
						IRN For issue by CA/TPI/Contractor IA
6	Is		R	H	X	Issue & Documentation at Vendor Place
						IMIR/GIIR at Yard/Offshore
7	W	W		H	X	Verification of items as per IRN
8	Is	R		-	X	IMIR/GIIR on the basis of IRN

LEGENDS & NOTES : Explained separately

ओएनजीसी ONGC	Offshore Design Section Engineering Services (ISO – 9001:2008)	INSPECTION REQUIREMENT TABLE	IRT No. ODS/ELE/IRT/15 Rev. No. 1 Discipline ELECTRICAL Inspection Category: A

Item: Submarine Cable

Activity No	1. Inspection by ONGC / Certification Agency (CA)	2. Inspection by ONGC / Third Party Inspector (TPI)	3.Inspection by EPC / EPC's Inspection Agency (IA)	4. Inspection by Vendor/ Sub vendor	5. Certificates/compliance/Data/Information to be submitted by vendor for Review/ Approval	6. Stages of Inspection
						General & documents- For Review/Approval /Information
1	A	-	R	H	X	QA Plan/ Inspection and Test Plan (All tests as per FS 4020) & FAT Procedure.
2	R	-	R	H	X	Reports of Tests – Type Tests (as per As per IEC 60502, Tensile Test, Partial discharge test, Water ingress and hydraulic pressure test, High Voltage Test, Temperature stability test), FAT, Calibration of test equipment.
3	R	-	R	H	X	Review of Material Test Certificates (MTC), conformance / compliance certificate, test reports etc for all major bought out components/ items as listed in QAP.
						Inspection & Testing- For Witness/ Random Witness
4	W	-	W	W	X	Visual inspection, Dimensional check, Name plate, Workman ship,
5	W		W	W	X	Physical inspection of Straight through Joining Kit, Hanger clamps, Bull nose (Pulling stockings/ abandonment kit/ sealing caps), Cable repair kit
						Routine Test
6	W		W	W	X	As per IEC 60502/IEC 60840
						Acceptance Test
7	W	-	W	W	X	Tests recommended during manufacturing in FS 4020 Factory acceptance tests in FS 4020 Type Tests mentioned in FS 4020 Pre load out, Post load tests recommended by vendor.
						IRN For issue by CA/TPI/Contractor IA
8	Is	-	R	H	X	Issue & Documentation at Vendor Place
						IMIR/GIIR at Yard/Offshore
9	W	W		H	X	Verification of items as per IRN
10	Is	R			X	IMIR/GIIR on the basis of IRN

LEGENDS & NOTES : Explained separately

ओएनजीसी ONGC	Offshore Design Section Engineering Services (ISO – 9001:2008)	INSPECTION REQUIREMENT TABLE	IRT No. ODS/ELE/IRT/16 Rev. No. 1 Discipline ELECTRICAL Inspection Category: C

Item: SURFACE ELECTRICAL CABLES (FS 4011)

Activity No	1. Inspection by ONGC / Certification Agency (CA)	2. Inspection by ONGC / Third Party Inspector (TPI)	3.Inspection by EPC / EPC's Inspection Agency (IA)	4. Inspection by Vendor/ Sub vendor	5. Certificates/compliance/Data/Information to be submitted by vendor for Review/ Approval	Stages of Inspection
						General & documents- For Review/Approval /Information
1	A	-	R	H	X	QA Plan/ Inspection and Test Plan , LV cables as per IEC 60092-353 Tables 4 to 6 , HV cables as per IEC 60092-354 Tables 3 to 5, Fire resistant cables as per IEC 60092-353 – Table 7 & FAT Procedure.
2	R	-	R	H	X	Procedures - FAT Procedure, Reports of Tests – Type Tests, FAT, Calibration of test equipment.
3	R	-	R	H	X	Review of Material Test Certificates (MTC), conformance / compliance certificate, test reports etc for all major bought out components/ items as listed in QAP.
						Inspection & Testing- For Witness/ Random Witness
4	-	-	W	W	X	Visual inspection, Dimensional check, Name plate, Workman ship,
						Routine Test
5	-	-	W	W	X	Tests as per approved QA Plan/Inspection Test plan
						IRN For issue by CA/TPI/Contractor IA
6	-	-	Is	H	X	Issue & Documentation at Vendor Place
						IMIR/GIIR at Yard/Offshore
7	W	W		H	X	Verification of items along with test certificates as per IRN
8	Is	R		-	X	IMIR/GIIR on the basis of IRN

LEGENDS & NOTES : Explained separately

ओएनजीसी ONGC	Offshore Design Section Engineering Services (ISO – 9001:2008)	INSPECTION REQUIREMENT TABLE	IRT No. ODS/ELE/IRT/17 Rev. No. 1 Discipline ELECTRICAL Inspection Category: B

Item: SYNCHRONOUS ALTERNATOR (Turbine Generator / Diesel Generator)

Activity No	1. Inspection by ONGC / Certification Agency (CA)	2. Inspection by ONGC / Third Party Inspector (TPI)	3.Inspection by EPC / EPC's Inspection Agency (IA)	4. Inspection by Vendor/ Sub vendor	5. Certificates/compliance/Data/Information to be submitted by vendor for Review/ Approval	6. Stages of Inspection
						General
1	A	-	R	H	X	QA Plan/ Inspection and Test Plan as per IEC 60034 ,FS4040 for GTG ,FS 4030 for Emergency Generator & FAT Procedure.
2	R	-	R	H	X	Reports of Tests – Type Tests as per IEC 60034, certificates for hazardous area classification/ enclosure protection as applicable.
3	R	-	R	H	X	Review of Material Test Certificates (MTC), conformance / compliance certificate, test reports etc for all major bought out components/ items as listed in QAP.
						Inspection and Testing
4	W	-	W	W	X	Visual inspection, Dimensional check, Name plate, Workman ship,
						Routine Test
5	W		W	W	X	All tests as per IEC 60034
						Acceptance Tests
6	W		W	W	X	Tests mentioned at FS 4040 / FS 4030 as applicable.
						IRN For issue by CA/TPI/Contractor IA
7	Is	-	R	H	X	Issue & Documentation at Vendor Place
						IMIR/GIIR at Yard/Offshore
8	W	W		H	X	Verification of items as per IRN
9	Is	R		-	X	IMIR/GIIR on the basis of IRN

LEGENDS & NOTES : Explained separately

ओएनजीसी ONGC	**Offshore Design Section Engineering Services (ISO – 9001:2008)**	**INSPECTION REQUIREMENT TABLE**	**IRT No.** ODS/ELE/IRT/18 **Rev. No.** 1 **Discipline** ELECTRICAL **Inspection Category: B**

Item: UPS System (INCLUDING NiCd BATTERY)

Activity No	1. Inspection by ONGC / Certification Agency (CA)	2. Inspection by ONGC / Third Party Inspector (TPI)	3.Inspection by EPC / EPC's Inspection Agency (IA)	4. Inspection by Vendor/ Sub vendor	5. Certificates/compliance/Data/Information to be submitted by vendor for Review/ Approval	**Stages of Inspection**
						General & documents- For Review/Approval /Information
1	A		R	H	X	QA Plan/ Inspection and Test Plan (Include tests as per IEC 62040, IEEE and FS 4025) & FAT Procedure.
2	R		R	H	X	Reports of Tests – Type Tests, FAT, Capacity and load cycle test for battery
3	R		R	H	X	Review of Material Test Certificates (As applicable) for Major Bought out components, test certificate for enclosure class.
						Inspection & Testing- For Witness/ Random Witness
4	W	--	W	W	X	Visual and dimensional check, Model no / Type verification, Workmanship check, Name plate / Tagging check, Earthing point check, Cable entry, Panel display check, Terminals check, paint shade check, Qty check ,Certified Blind Plug, Accessories check etc. (As applicable).
						Acceptance Tests
5	W		W	W	X	To include all tests as per FS 4025.
						Routine Test
6	W	--	W	W	X	All tests as per IEC 62040 for UPS and IEEE for Battery.
						IRN For issue by CA/TPI/Contractor IA
7	Is		R	H	X	Issue & Documentation at Vendor Place
						IMIR/GIIR at Yard/Offshore
8	W	W		H	X	Verification of items as per IRN
9	Is	R			W	IMIR/GIIR on the basis of IRN

LEGENDS & NOTES : Explained separately

ओएनजीसी ONGC	Offshore Design Section Engineering Services (ISO – 9001:2008)	INSPECTION REQUIREMENT TABLE	IRT No. ODS/ELE/IRT/19 Rev. No. 1 Discipline ELECTRICAL Inspection Category: C

Item: NAVIGATIONAL AIDS SYSTEM

Activity No.	1. Inspection by ONGC / Certification Agency.(CA)	2. Inspection by ONGC / Third Party Inspection(TPI)	3.Inspection by EPC / EPC's Inspection Agency (IA)	4. Inspection by Vendor/ Sub Vendor	5. Certificates/compliance/Data/Information to be submitted by vendor for Review/ Approval	6.Stage of Inspection Involved
						General & documents- For Review/Approval /Information
1	A	-	R	H	X	QA Plan/ Inspection and Test Plan (All tests as per FS 4003A as applicable).
2	R	-	R	H	X	Reports of Tests – Type Tests (Specified Enclosure Class(as applicable), Hazardous Area Classification (as applicable). Range test certificate for Marine Lantern).
3	R	-	R	H	X	Review of Material Test Certificates (As applicable) for Major Bought out components, test certificate for enclosure class.
						General & documents- For Review/Approval /Information
4	-	-	W	W	X	Final Visual inspection, Dimensional check, Tag plate/Name plate, Workman ship, Earthing Point Check, Quality & quantity check, rating check, Accessories check(As applicable)
						Routine Test
5	-		W	W	X	Functional Test of complete system including Synchronization as per approved QAP/ITP
						IRN For issue by CA/TPI/Contractor IA
6	-		Is	H	X	Review of final documentation and issue of Release note
						IMIR/GIIR at Yard/Offshore
7	W	W	-	H	X	Verification of items along with all test reports as per IRN
8	Is	R		-	X	IMIR/GIIR on the basis of IRN

LEGENDS & NOTES: Explained separately

ओएनजीसी ONGC	Offshore Design Section Engineering Services (ISO – 9001:2008)	INSPECTION REQUIREMENT TABLE	IRT No. ODS/ELE/IRT/20 Rev. No. 1 Discipline ELECTRICAL Inspection Category: C

Item: ELECTRICAL HEAT TRACING SYSTEM

Activity No.	1. Inspection by ONGC / Certification Agency.(CA)	2. Inspection by ONGC / Third Party Inspection(TPI)	3.Inspection by EPC / EPC's Inspection Agency (IA)	4. Inspection by Vendor/ Sub Vendor	5. Certificates/compliance/Data/Information to be submitted by vendor for Review/ Approval	6.Stage of Inspection Involved	
							General & documents- For Review/Approval /Information
1	A	-	R	H	X		QA Plan/ Inspection and Test Plan (All tests as per FS 4016 and IEEE 515)
2	R	-	R	H	X		Reports of Tests – Type Tests, Hazardous area classification area certificates as applicable.
3	R	-	R	H	X		Review of Material Test Certificates (As applicable)
							General & documents- For Review/Approval /Information
4	-	-	W	W	X		Final Visual inspection, Dimensional check, Tag plate/Name plate, Workman ship, Quality & quantity check, rating check, Accessories check(As applicable)
							Routine Test
5	-		W	W	X		As per IEE515
							IRN For issue by CA/TPI/Contractor IA
6	-		Is	H	X		Review of final documentation and issue of Release note
							IMIR/GIIR at Yard/Offshore
7	W	W	-	H	X		Verification of items along with all test reports as per IRN
8	Is	R		H	X		IMIR/GIIR on the basis of IRN

LEGENDS & NOTES: Explained separately

ओएनजीसी ONGC	**Offshore Design Section Engineering Services (ISO – 9001:2008)**	**INSPECTION REQUIREMENT TABLE**	**IRT No.** ODS/ELE/IRT/21 **Rev. No.** 1 **Discipline** ELECTRICAL **Inspection Category: Bulk**

Item: (1) Fluorescent / Incandescent Class-"B" LTG Fixtures (FS 4028)
(2) Div.2 Aviation Marker Lighting Fixtures (FS 4006)
(3) Hazardous Area Lighting Fixtures (FS 4006)
(4) Multi Cable Transit (MCT)
(5) Cable Glands (FS4043)
(6) Explosion Proof Control Stations (FS 4012)
(7) Industrial Type Plug and Sockets (FS 4034)
(8) Welding Receptacles & Convenience Outlets (Flameproof) (FS 4034)
(9) FRP Cable Tray (FS4005)

Activity No.	1. Inspection by ONGC / Certification Agency.(CA)	2. Inspection by ONGC / Third Party Inspection(TPI)	3.Inspection by EPC / EPC's Inspection Agency (IA)	4. Inspection by Vendor/ Sub Vendor	5. Certificates/compliance/Data/Information to be submitted by vendor for Review/ Approval	6.Stage of Inspection Involved
						General & documents- For Review/Approval /Information
1	A	-	R	H	X	QA Plan/ Inspection and Test Plan (All tests as per referred FS as applicable)
2	R	-	R	H	X	Reports of Tests – Type Tests as per NEMA-FG-1 (Destruction load test, Deflection test), Fire retardant test (class 1 fire rating as per ASTM E84).
3	R	-	-	H	X	Review of Material Test Certificates (As applicable)
						General & documents- For Review/Approval /Information
4	-	-	RW	W	X	Final Visual inspection, Dimensional check, Tag plate/Name plate, Workman ship, Quality & quantity check.
						IRN For issue by CA/TPI/Contractor IA
5	-		Is	H	X	Review of final documentation and issue of Release note
						IMIR/GIIR at Yard/Offshore
6	W	W	-	H	X	Verification of items along with all test reports as per IRN
7	Is	R		H	X	IMIR/GIIR on the basis of IRN

LEGENDS & NOTES: Explained separately

ONGC	Offshore Design Section Engineering Services ISO – 9001:2008	LIST OF IRTs (INSPECTION REQUIREMENT TABLE) & APPROVAL	Date	22/12/2016
			Discipline	INSTRUMENTATION
			Page: 1 OF 2	

Sr.No.	Description of Item	IRT no.	Inspection Category	Rev. No.	Rev. Date
1.	Distributed Control System (DCS)	ODS/INST/IRT/001	B	1	22.12.2016
2.	Control Valve	ODS/INST/IRT/002	B	1	22.12.2016
3.	Safety Relief Valves	ODS/INST/IRT/003	B	1	22.12.2016
4.	Self-Actuated Pressure Control Valves	ODS/INST/IRT/004	B	1	22.12.2016
5.	Multi-Phase Flow Meter	ODS/INST/IRT/005	B	1	22.12.2016
6.	F&G Detection system	ODS/INST/IRT/006	B	1	22.12.2016
7.	Deluge Valve	ODS/INST/IRT/007	B	1	22.12.2016
8.	F&G Detectors	ODS/INST/IRT/008	B	1	22.12.2016
9.	Coriolis Flow Meter	ODS/INST/IRT/009A	B	1	22.12.2016
10.	Coriolis Flow Meter	ODS/INST/IRT/009B	C	1	22.12.2016
11.	Ultrasonic Flow Meter	ODS/INST/IRT/010A	B	1	22.12.2016
12.	Ultrasonic Flow Meter	ODS/INST/IRT/010B	C	1	22.12.2016
13.	Magnetic Flow Meter	ODS/INST/IRT/011A	B	1	22.12.2016
14.	Magnetic Flow Meter	ODS/INST/IRT/011B	C	1	22.12.2016
15.	Turbine Flow Meter	ODS/INST/IRT/012A	B	1	22.12.2016
16.	Turbine Flow Meter	ODS/INST/IRT/012B	C	1	22.12.2016
17.	DP Cone Meter	ODS/INST/IRT/013	C	1	22.12.2016
18.	Orifice Assembly & Restriction Orifice	ODS/INST/IRT/014	C	1	22.12.2016
19.	Electronic Transmitter	ODS/INST/IRT/015	C	1	22.12.2016
20.	Level Transmitter (Radar Type / Displacer Type)	ODS/INST/IRT/016	C	1	22.12.2016
21.	Pressure / DP Gauges	ODS/INST/IRT/017	C	1	22.12.2016
22.	Tempreature Gauge	ODS/INST/IRT/018	C	1	22.12.2016
23.	Temperature Switch	ODS/INST/IRT/019	C	1	22.12.2016
24.	Level Gauges	ODS/INST/IRT/020	C	1	22.12.2016
25.	Instrument Tubes and Instrument Fittings & Valves	ODS/INST/IRT/021	C	1	22.12.2016
26.	Manual Alarm Station / Sounder / Annuciator / Beacon / Strobe Light /Miscellaneous Items	ODS/INST/IRT/022	BULK	1	22.12.2016
27.	Field Panels / Junction Boxes	ODS/INST/IRT/023	BULK	1	22.12.2016
28.	MCT Blocks	ODS/INST/IRT/024	BULK	1	22.12.2016
29.	Manual ESD / FSD Station & Valves, Fusible Plugs	ODS/INST/IRT/025	C	1	22.12.2016
30.	CABLE(Electrical, Instrument, Communication and Earthing)	ODS/INST/IRT/026	C	1	22.12.2016
31.	Subsea Umbilical	ODS/INST/IRT/027	B	1	22.12.2016
32.	Senior Orifice Meter	ODS/INST/IRT/028	C	1	22.12.2016
33.	Portable Calibrator	ODS/INST/IRT/029	C	1	22.12.2016
34.	Flow Totalizer	ODS/INST/IRT/030	C	1	22.12.2016
35.	Pneumatic Pressure Indicating Controller	ODS/INST/IRT/031	C	1	22.12.2016
36.	Pneumatic Level Switch	ODS/INST/IRT/032	C	1	22.12.2016
37.	Shutdown Panel	ODS/INST/IRT/033	B	1	22.12.2016
38.	Pneumatic Pressure Switch	ODS/INST/IRT/034	C	1	22.12.2016
39.	Rotameter	ODS/INST/IRT/035	C	1	22.12.2016
40.	Pressure Switch (Elec.)	ODS/INST/IRT/036	C	1	22.12.2016
41.	Level Switch (Elec.)	ODS/INST/IRT/037	C	1	22.12.2016
42.	Flow Computer	ODS/INST/IRT/038	C	1	22.12.2016

R. Madhuri
22/12/2016

	Offshore Design Section Engineering Services ISO – 9001:2008	LIST OF IRTs (INSPECTION REQUIREMENT TABLE) & APPROVAL	Date	22/12/2016
			Discipline	INSTRUMENTATION
			Page: 2 OF 2	

43.	SSIV Actuator & HPU cum CP	ODS/INST/IRT/039	B	1	22.12.2016
44.	PLC	ODS/INST/IRT/040	B	1	22.12.2016
45.	Water Cut Meter	ODS/INST/IRT/041	C	1	22.12.2016
46.	Wet Gas Meter	ODS/INST/IRT/042	B	1	22.12.2016
47.	Flow Switch (Pneumatic/ Electrical)	ODS/INST/IRT/043	C	1	22.12.2016

Prepared / Revised By	Reviewed By	Approved By
	22/12/16	K. Madhu 22/12/2016.
MD, Dy.S.E(I)	ARD, DGM(E&T) Discipline Head	KM, GM(I) Group Head

ओएनजीसी ONGC	**Offshore Design Section Engineering Services (ISO – 9001:2008)**	**INSPECTION REQUIREMENT TABLE**	**IRT No.** ODS/INST/IRT/01 **Rev No** 1 **Discipline** Instrumentation

Item: DCS	**FS No.-C100**	**Inspection Category: B**

Activity No	1. Inspection by ONGC / Certification Agency (CA)	2. Inspection by ONGC / Third Party Inspector (TPI)	3.Inspection by EPC / EPC's Inspection Agency (IA)	4. Inspection by Vendor/ Sub vendor	5. Certificates/compliance/Data/Information to be submitted by vendor for Review/ Approval	6. Stages of Inspection
						General & documents- For Review/Approval /Information
1	A	--	R	H	X	Inspection and Test Plan
2	A	--	R	H	X	FAT & SAT Procedure.
3	R	--	R	H	X	Bill of material including Software / Hardware completeness.
4	R	--	R	H	X	Internal test reports of vendor's QA/QC and Pre FAT signed by Vendor QAD. Certificate from vendor QAD for 30 day burn in period.
5	R	--	R	H	X	Test certificates , Compliance Certificates , Manufacturer Reports
6	R	--	R	H	X	Certificate for specified area classification , certificate for conformal coating , certificate for Enclosure class etc.
7	R	--	R	H	X	Type test certificates for SIL as per company specification. (As Applicable)
8	R	--	R	H	X	Type test certificates for RFI & EMC etc. as per FS.
						Inspection & Testing- For Witness/ Random Witness
9	W	--	W	H	X	Final Visual, Dimensional, Cable entry checks, Tagging , Nameplate check, earthing system, paint shade, Check for Consoles, Spare capacity verification, Accessories check.
10	W	--	W	H	X	Bill of material verification including programming, Software, Hardware completeness.
11	W	--	W	H	X	Heat soak test at vendor's works
						"FAT (Factory Acceptance Tests) : Complete functional check by simulation of operational logic, Logic scheme check as per safe chart/causes & effect diagram by simulation of various I/O's, interlock & shutdown logic, check of visual, audible alarms
						Redundancy check, system diagnostic, CPU failure, CPU & communication loading, power supply failure, check for Console display, keyboard & printer operation, On-line card changeover check, SOE test, interface with Third party devices, (As applicable).
						System response, Scan time check, System configuration check, power supply variation check, Loop checking (100%) etc.
						Trends & Reports, MIS checks etc.
						Noise level measurement as per company specification.
						System I/O map display and Graphics Check
12	RW	--	RW	H	X	Painting / Protective coating -Final DFT & color code (if applicable) as per ONGC Spec. 2005
13	W	--	W	W	X	Undertake any other Tests as stated in the relevant FS of the Item and Confirm Compliance of the Item under Inspection to ONGCs FS.
						IRN For issue by CA/TPI/Contractor IA
14	Is	-	R	H	X	Issue & Documentation at Vendor Works
						IMIR/GIIR at Yard/Offshore
15	W	W		H	X	Verification of items as per IRN
16	R	R			X	IMIR/GIIR on the basis of IRN
17	W	W		H	X	SAT/Performance Test in field (offshore platform) by the vendor.

LEGENDS & NOTES: Explained separately

ओएनजीसी ONGC	**Offshore Design Section Engineering Services (ISO – 9001:2008)**	**INSPECTION REQUIREMENT TABLE**	**IRT No.** ODS/INST/IRT/02 **Rev No** 1 **Discipline** Instrumentation

Item: Control Valve and Accessories | **FS No.**-3700 | **Inspection Category: B**

Activity No	1. Inspection by ONGC / Certification Agency (CA)	2. Inspection by ONGC / Third Party Inspector (TPI)	3.Inspection by EPC / EPC's Inspection Agency (IA)	4. Inspection by Vendor/ Sub vendor	5. Certificates/compliance/Data/Information to be submitted by vendor for Review/ Approval	6. Stages of Inspection
						General & documents- For Review/Approval /Information
1	A	--	R	H	X	Inspection and Test Plan
2	A	--	R	H	X	Hydro test Procedure, Painting Procedure, Calibration Procedure etc. (As applicable).
3	R	--	R	H	X	Material test certificates, Compliance certificates for wetted parts (NACE for sour service)
4	R	--	R	H	X	NDT records (As applicable).
5	R	--	R	H	X	Report of 100% RT or 100% UT for all casting & Welding.
6	R	--	R	H	X	Factory test reports, Calibration test certificates for Valves, Manufacture certificate/Conformity certificate for major bought out item viz ; solenoid, limit switch, actuator, smart positioner, Air filter regulator (as applicable)
7	R	--	R	H	X	Type test certificate for Hazardous area classification (Test certificate / Conformity certificate) & Test certificate / Conformity certificate for enclosure class,(As Applicable), referring to accessories viz; solenoid, limit switch, positioner, AFR (As Applicable)
						Inspection & Testing- For Witness/ Random Witness
8	W	--	W	H	X	Hydro test for body & Seat leak test as per ASME B16.34 clause 7.1 & ASME/FCI 70.2
9	W	--	W	H	X	Final Visual, Dimensional (1pc/type/model/lot), Tagging, Nameplate check (as per ONGC Spec FS 3700, REV 4), Direction marking on valve, cable entry, Pneumatic process connection, Accessories check etc.
10	W	--	W	H	X	Functional check , Operation check, Calibration check (100% per type)
11	RW	--	RW	H	X	Painting & protective coating check (Final DFT) as per ONGC Spec 2005
12	W	--	W	W	X	Undertake any other Tests as stated in the relevant FS of the Item and Confirm Compliance of the Item under Inspection to ONGCs FS.
						IRN For issue by CA/TPI/Contractor IA
13	Is	-	R	H	X	Issue & Documentation at Vendor Place
						IMIR/GIIR at Yard/Offshore
14	W	W		H	X	Verification of items as per IRN
15	IS	R			X	IMIR/GIIR on the basis of IRN

LEGENDS & NOTES: Explained separately

ओएनजीसी ONGC	**Offshore Design Section Engineering Services (ISO – 9001:2008)**	**INSPECTION REQUIREMENT TABLE**	**IRT No.** ODS/INST/IRT/03 **Rev No** 1 **Discipline** Instrumentation

Item: Safety Relief Valves / Pressure Safety Valves	**FS No.**-3701	**Inspection Category:** B

Activity No	1. Inspection by ONGC / Certification Agency (CA)	2. Inspection by ONGC / Third Party Inspector (TPI)	3.Inspection by EPC / EPC's Inspection Agency (IA)	4. Inspection by Vendor/ Sub vendor	5. Certificates/compliance/Data/Information to be submitted by vendor for Review/ Approval	6. Stages of Inspection
						General & documents- For Review/Approval /Information
1	A	--	R	H	X	Inspection and Test Plan
2	A	--	R	H	X	Hydro test Procedure, Painting Procedure, Calibration Procedure, Leak Test Procedure, NDT Procedure etc. (As applicable).
3	R	--	R	H	X	Material test certificates, Compliance certificates for wetted parts (NACE for sour service)
4	R	--	R	H	X	NDT records (As applicable).
5	R	--	R	H	X	All casting & welding shall be 100% radiographed.
6	R	--	R	H	X	Factory test reports, Calibration test certificates & Manufacture certificate/Conformity certificate for valves (as applicable)
						Inspection & Testing- For Witness/ Random Witness
8	W	--	RW	H		Hydro test for body, Pop-up test at set pressure & Seat leak test as per ASMEB16.34 clause 7.1 & ASME/FCI 70.2
9	W	--	W	H	X	Final Visual, Dimensional(1pc/type/model/lot) as per API/ASME/ASTM std.
10	W	--	W	H	X	Tagging, Nameplate check (as per ONGC Spec FS 3701 REV 3), ASME Code stamping on valve, Accessories check etc.
11	W	--	W	H	X	Functional check , Operation check , Calibration check as per API 527(100% per type)
12	RW	--	RW	H	X	Painting & protective coating check (Final DFT) as per ONGC Spec 2005
13	W	--	W	W	X	Undertake any other Tests as stated in the relevant FS of the Item and Confirm Compliance of the Item under Inspection to ONGCs FS.
						IRN For issue by CA/TPI/Contractor IA
14	Is	-	R	H	X	Issue & Documentation at Vendor Works
						IMIR/GIIR at Yard/Offshore
15	W	W		H	X	Verification of items as per IRN
16	IS	R			X	IMIR/GIIR on the basis of IRN

LEGENDS & NOTES: Explained separately

ओएनजीसी ONGC	**Offshore Design Section Engineering Services (ISO – 9001:2008)**	**INSPECTION REQUIREMENT TABLE**	**IRT No.** ODS/INST/IRT/04 **Rev No** 1 **Discipline** Instrumentation

Item: Self actuated pressure control valve	**FS No.**-3702	**Inspection Category:** B

Activity No	1. Inspection by ONGC / Certification Agency (CA)	2. Inspection by ONGC / Third Party Inspector (TPI)	3.Inspection by EPC / EPC's Inspection Agency (IA)	4. Inspection by Vendor/ Sub vendor	5. Certificates/compliance/Data/Information to be submitted by vendor for Review/ Approval	6. Stages of Inspection
						General & documents- For Review/Approval /Information
1	A	--	R	H	X	Inspection and Test Plan
2	A	--	R	H	X	Hydro test Procedure, Painting Procedure, Calibration Procedure etc. (As applicable).
3	R	--	R	H	X	Material test certificates , Compliance certificates for wetted parts (NACE for sour service)
4	R	--	R	H	X	Casting & Welding shall be 100% RT or 100% UT for forged item.
5	R	--	R	H	X	NDT records (As applicable).
6	R	--	R	H	X	Factory test reports , Calibration test certificates & Manufacture certificate/Conformity certificate for valves (as applicable)
7	R	--	R	H	X	Type test certificate for Hazardous area classification (Test certificate / Conformity certificate) & Test certificate / Conformity certificate for enclosure class,(As Applicable)
						Inspection & Testing- For Witness/ Random Witness
8	W	--	W	H	X	Hydro test for body & Seat leak test
9	W	--	W	H	X	Final Visual, Dimensional (1pc/type/model/lot), Tagging, Nameplate check (as per ONGC Spec FS 3702) , Direction Marking on assembled valve, Accessories check etc.
10	W	--	W	H	X	Functional check , Operation check , Calibration check (100% per type)
11	RW	--	RW	H	X	Painting & protective coating check (Final DFT) as per ONGC Spec 2005
13	W	--	W	W	X	Undertake any other Tests as stated in the relevant FS of the Item and Confirm Compliance of the Item under Inspection to ONGCs FS.
						IRN For issue by CA/TPI/Contractor IA
14	Is	-	R	H	X	Issue & Documentation at Vendor Works
						IMIR/GIIR at Yard/Offshore
15	W	W		H	X	Verification of items as per IRN
16	IS	R			X	IMIR/GIIR on the basis of IRN

LEGENDS & NOTES: Explained separately

ओएनजीसी ONGC	**Offshore Design Section Engineering Services (ISO – 9001:2008)**	**INSPECTION REQUIREMENT TABLE**	**IRT No.** ODS/INST/IRT/05 **Rev No** 1 **Discipline** Instrumentation

Item: Multiphase Flow Meter (MPFM)	**FS No.**-3209	**Inspection Category:** B

Activity No

1. Inspection by ONGC / Certification Agency (CA)
2. Inspection by ONGC / Third Party Inspector (TPI)
3. Inspection by EPC / EPC's Inspection Agency (IA)
4. Inspection by Vendor/ Sub vendor
5. Certificates/compliance/Data/Information to be submitted by vendor for Review/ Approval
6. Stages of Inspection

						General & documents- For Review/Approval /Information
1	A	--	R	H	X	Inspection and Test Plan & FAT procedure
2	A	--	R	H	X	Hydro test Procedure, Functional test procedure(as applicable)
3	R	--	R	H	X	Material test certificates, Compliance certificates for wetted parts (NACE for sour service) as per ONGC Spec 2004A
4	R	--	R	H	X	NDT records (As applicable).
5	R	--	R	H	X	Type test certificate for Hazardous area classification (Test certificate / Conformity certificate) & Test certificate / Conformity certificate for enclosure class,(As Applicable)
6	R	--	R	H	X	Factory test reports, Calibration test certificates, Manufacture certificate/Conformity certificate for major bought out item.
						Inspection & Testing- For Witness/ Random Witness
7	RW	--	W	H	X	Hydro test/Leak test (as applicable)
8	RW	--	W	H	X	Final Visual, Dimensional(1pc/type/model) , Tagging , Nameplate check , Mounting type/Process/Process connection check , Display check ,Cable entry check ,Flow direction check ,Flange finish check, Accessories check etc.
9	RW	--	W	H	X	Functional check of meter assembly Including input signals, outputs, display check etc.) { As Applicable }
10	RW	--	W	H	X	Painting & protective coating check (Final DFT) as per ONGC Spec 2005
11	RW	--	W	H	X	Software package version & license verification (As applicable) (*Random witness 10%).
12	W	--	W	W	X	Undertake any other Tests as stated in the relevant FS of the Item and Confirm Compliance of the Item under Inspection to ONGCs FS. FAT at Vendor's place
						IRN For issue by CA/TPI/Contractor IA
13	Is	-	R	H	X	Issue & Documentation at Vendor Place
						IMIR/GIIR at Yard/Offshore
14	W	W		H	X	Verification of items as per IRN
15	IS	R			X	IMIR/GIIR on the basis of IRN

LEGENDS & NOTES: Explained separately

ओएनजीसी ONGC	**Offshore Design Section Engineering Services (ISO – 9001:2008)**	**INSPECTION REQUIREMENT TABLE**	**IRT No.** ODS/INST/IRT/06 **Rev No** 1 **Discipline** Instrumentation

Item: F&G Detection System	**FS No.**-3500	**Inspection Category:** B

Activity No	1. Inspection by ONGC / Certification Agency (CA)	2. Inspection by ONGC / Third Party Inspector (TPI)	3.Inspection by EPC / EPC's Inspection Agency (IA)	4. Inspection by Vendor/ Sub vendor	5. Certificates/compliance/Data/Information to be submitted by vendor for Review/ Approval	6. Stages of Inspection
						General & documents- For Review/Approval /Information
1	A	--	R	H	X	Inspection and Test Plan
2	A	--	R	H	X	FAT & SAT Procedure.
3	R	--	R	H	X	Bill of material including Software, Hardware completeness.
4	R	--	R	H	X	Internal test reports of vendor's QA/QC and Pre FAT signed by Vendor QAD. Certificate from vendor QAD for 30 day burn in period..
5	R	--	R	H	X	Test certificate , Compliance Certificate , Manufacturer Reports
6	R	--	R	H	X	Certificate for specified area classification,, certificate for conformal coating , certificate for Enclosure class.
7	R	--	R	H	X	Type test certificates for SIL as per company specification. (As Applicable)
8	R	--	R	H	X	Type test certificates for RFI & EMC etc. as per FS.
						Inspection & Testing- For Witness/ Random Witness
9	W	--	W	H	X	Final Visual, Dimensional, Cable entry checks, Tagging, Nameplate check, earthing system, paint shade, Check for Consoles, Spare capacity verification, Accessories check.
10	W	--	W	H	X	Bill of material verification including programming, Software / Hardware completeness.
11	W	--	W	H	X	"FAT (Factory Acceptance Tests) : Complete functional check by simulation of operational logic, Logic scheme check as per safe chart/causes & effect diagram by simulation of various I/O's, interlock & shutdown logic, check of visual, audible alarms
12	RW	--	RW	H	X	Painting / Protective coating -Final DFT & color code (if applicable) as per ONGC Spec. 2005
13	W	--	W	W	X	Undertake any other Tests as stated in the relevant FS of the Item and Confirm Compliance of the Item under Inspection to ONGCs FS.
						IRN For issue by CA/TPI/Contractor IA
15	Is	-	R	H	X	Issue & Documentation at Vendor Works
						IMIR/GIIR at Yard/Offshore
16	W	W		H	X	Verification of items as per IRN
17	R	R			X	IMIR/GIIR on the basis of IRN
18	W	W		H	X	SAT/Performance Test in field (offshore platform) by the vendor.

LEGENDS & NOTES: Explained separately

ओएनजीसी ONGC	**Offshore Design Section Engineering Services (ISO – 9001:2008)**	**INSPECTION REQUIREMENT TABLE**	**IRT No.** ODS/INST/IRT/07 **Rev No** 1 **Discipline** Instrumentation

Item: Deluge Valves	**FS No.**-3703	**Inspection Category: B**

Activity No	1. Inspection by ONGC / Certification Agency (CA)	2. Inspection by ONGC / Third Party Inspector (TPI)	3.Inspection by EPC / EPC's Inspection Agency (IA)	4. Inspection by Vendor/ Sub vendor	5. Certificates/compliance/Data/Information to be submitted by vendor for Review/ Approval	6. Stages of Inspection
						General & documents- For Review/Approval /Information
1	A	--	R	H	X	Inspection and Test Plan
2	A	--	R	H	X	Hydro test Procedure, Painting Procedure, Calibration Procedure etc. (As applicable).
3	R	--	R	H	X	Material test certificates, Compliance certificates for wetted parts ((NACE for sour service)
4	R	--	R	H	X	Casting & Welding shall be 100% RT or 100% UT for forged item.
5	R	--	R	H	X	NDT records (As applicable).
6	R	--	R	H	X	Underwriters Laboratory (UL) or FM certification (If Applicable)
7	R	--	R	H	X	Factory test reports, Calibration test certificates for Valves, Manufacture certificate/Conformity certificate for major brought out item(as applicable)
8	R	--	R	H	X	Type test certificate for Hazardous area classification(Test certificate / Conformity certificate)& Test certificate / Conformity certificate for enclosure class for brought item (As Applicable)
						Inspection & Testing- For Witness/ Random Witness
9	RW	--	W	H	X	Final Visual, Dimensional (1pc/type/model/lot), Tagging, Nameplate check (as per ONGC Spec FS 3703), Direction marking on valve, cable entry, Pneumatic process connection, Accessories check etc.
10	RW	--	W	H	X	Functional check, Operation check , Calibration check(10% per type)
11	RW	--	W	H	X	Hydro test for body & Seat leak test as per ASMEB16.34 clause 7.1 & ASME/FCI 70.2
12	RW	--	RW	H	X	Painting & protective coating check(Final DFT) as per ONGC Spec 2005
13	W	--	W	W	X	Undertake any other Tests as stated in the relevant FS of the Item and Confirm Compliance of the Item under Inspection to ONGCs FS.
						IRN For issue by CA/TPI/Contractor IA
14	Is	-	R	H	X	Issue & Documentation at Vendor Works
						IMIR/GIIR at Yard/Offshore
15	W	W		H	X	Verification of items as per IRN
16	IS	R			X	IMIR/GIIR on the basis of IRN

LEGENDS & NOTES: Explained separately

ओएनजीसी ONGC	**Offshore Design Section Engineering Services (ISO – 9001:2008)**	**INSPECTION REQUIREMENT TABLE**	**IRT No.** ODS/INST/IRT/08 **Rev No** 1 **Discipline** Instrumentation

Item: F & G Detectors	**FS No.**-3500	**Inspection Category: B**

Activity No	1. Inspection by ONGC / Certification Agency (CA)	2. Inspection by ONGC / Third Party Inspector (TPI)	3.Inspection by EPC / EPC's Inspection Agency (IA)	4. Inspection by Vendor/ Sub vendor	5. Certificates/compliance/Data/Information to be submitted by vendor for Review/ Approval	6. Stages of Inspection
						General & documents- For Review/Approval /Information
1	A	--	R	H	X	Inspection and Test Plan
2	R	--	R	H	X	FAT & SAT procedure.
3	R	--	R	H	X	Material test certificates / Compliance certificates (As applicable).
4	R	--	R	H	X	Factory test report/Calibration test certificate
5	R	--	R	H	X	Type test certificate for Hazardous area classification & Test certificate / Conformity certificate for enclosure class (As applicable).
						Inspection & Testing- For Witness/ Random Witness
6	RW	--	W	H	X	Final Visual, Dimensional, Model no,/ Type verification, Workmanship check, Name plate , Tagging check ,Mounting type check, Cable entry Check, Terminals check,, Qty. check ,Certified Blind Plug , Accessories check etc. (As applicable).
7	RW	--	RW	H	X	Functional , Operation check , Calibration check (10% per type)
8	W	--	W	W	X	Undertake any other Tests as stated in the relevant FS of the Item and Confirm Compliance of the Item under Inspection to ONGCs FS.
						IRN For issue by CA/TPI/Contractor IA
9	Is	-	R	H	X	Issue & Documentation at Vendor Works
						IMIR/GIIR at Yard/Offshore
10	W	W		H	X	Verification of items as per IRN along with all Inspection Report
11	R	R			X	IMIR/GIIR on the basis of IRN
12	W	W		H	X	SAT/Performance Test in field (offshore platform) by the vendor.

LEGENDS & NOTES: Explained separately

ओएनजीसी ONGC	**Offshore Design Section Engineering Services (ISO – 9001:2008)**	**INSPECTION REQUIREMENT TABLE**	**IRT No.** ODS/INST/IRT/09A **Rev No** 1 **Discipline** Instrumentation

Item: Coriolis Flow Meter	**FS No.**-3208	**Inspection Category: B** (For Custody Meter)

Activity No	1. Inspection by ONGC / Certification Agency (CA)	2. Inspection by ONGC / Third Party Inspector (TPI)	3.Inspection by EPC / EPC's Inspection Agency (IA)	4. Inspection by Vendor/ Sub vendor	5. Certificates/compliance/Data/Information to be submitted by vendor for Review/ Approval	6. Stages of Inspection
						General & documents- For Review/Approval /Information
1	A	--	R	H	X	Inspection and Test Plan & for custody transfer application only- FAT procedure
2	A	--	R	H	X	Hydro test Procedure, Painting Procedure, Calibration Procedure etc. (As applicable).
3	R	--	R	H	X	Hydro test report (as applicable)
4	R	--	R	H	X	Material test certificates, Compliance certificates for wetted parts (NACE for sour service) as per ONGC Spec 2004A
5	R	--	R	H	X	NDT records as per company specification. (As applicable).
6	R	--	R	H	X	Type test certificate for Hazardous area classification(Test certificate / Conformity certificate) & Test certificate / Conformity certificate for enclosure class (As Applicable)
7	R	--	R	H	X	Type test certificates for RFI, EMC etc.as per company specification.
						Inspection & Testing- For Witness/ Random Witness
8	RW	--	W	H	X	Final Visual, Dimensional , Tagging / Nameplate check ,Mounting type/Process connection check , Cable entry check , Flow direction check , Accessories check etc.
9	RW	--	W	H	X	Functional check, Operation check, Calibration check (as applicable)
	RW	--	RW	H	X	Painting & protective coating check (Final DFT) as per ONGC Spec 2005
10	W	--	W	W	X	Undertake any other Tests as stated in the relevant FS of the Item and Confirm Compliance of the Item under Inspection to ONGCs FS. FAT at vendor place
						IRN For issue by CA/TPI/Contractor IA
11	Is	-	R	H	X	Issue & Documentation at Vendor Works
						IMIR/GIIR at Yard/Offshore
12	W	W		H	X	Verification of items as per IRN
13	IS	R			X	IMIR/GIIR on the basis of IRN

LEGENDS & NOTES: Explained separately

ओएनजीसी ONGC	**Offshore Design Section Engineering Services (ISO – 9001:2008)**	**INSPECTION REQUIREMENT TABLE**	**IRT No.** ODS/INST/IRT/09B **Rev No** 1 **Discipline** Instrumentation

Item: Coriolis Flow Meter	**FS No.**-3208	**Inspection Category: C** (For other than Custody Meter)

Activity No	1. Inspection by ONGC / Certification Agency (CA)	2. Inspection by ONGC / Third Party Inspector (TPI)	3.Inspection by EPC / EPC's Inspection Agency (IA)	4. Inspection by Vendor/ Sub vendor	5. Certificates/compliance/Data/Information to be submitted by vendor for Review/ Approval	6. Stages of Inspection
						General & documents- For Review/Approval /Information
1	A	--	R	H	X	Inspection and Test Plan
2	A	--	R	H	X	Hydro test Procedure, Painting Procedure, Calibration Procedure etc. (As applicable).
3	R	--	R	H	X	Hydro test (as applicable)
4	R	--	R	H	X	Material test certificates, Compliance certificates for wetted parts (NACE for sour service) as per ONGC Spec 2004A
5	R	--	R	H	X	NDT records as per company specification. (As applicable).
6	R	--	R	H	X	Type test certificate for Hazardous area classification(Test certificate / Conformity certificate) & Test certificate / Conformity certificate for enclosure class (As Applicable)
7	R	--	R	H	X	Type test certificates for RFI, EMC etc.as per company specification.
						Inspection & Testing- For Witness/ Random Witness
8	--	--	W	H	X	Final Visual, Dimensional , Tagging / Nameplate check ,Mounting type/Process connection check , Cable entry check , Flow direction check , Accessories check etc.
9	--	--	W	H	X	Functional check, Operation check, Calibration check (as applicable)
	--	--	RW	H	X	Painting & protective coating check (Final DFT) as per ONGC Spec 2005
10	--	--	W	W	X	Undertake any other Tests as stated in the relevant FS of the Item and Confirm Compliance of the Item under Inspection to ONGCs FS.
						IRN For issue by CA/TPI/Contractor IA
11	--	-	Is	H	X	Issue & Documentation at Vendor Works
						IMIR/GIIR at Yard/Offshore
12	W	W		H	X	Verification of items as per IRN along with all Inspection Report
13	IS	R			X	IMIR/GIIR on the basis of IRN

LEGENDS & NOTES: Explained separately

ओएनजीसी ONGC	**Offshore Design Section Engineering Services (ISO – 9001:2008)**	**INSPECTION REQUIREMENT TABLE**	**IRT No.** ODS/INST/IRT/10A **Rev No** 1 **Discipline** Instrumentation

Item: Ultrasonic Flow Meter	**FS No.**-3212	**Inspection Category: B** (For Custody Meter)

Activity No	1. Inspection by ONGC / Certification Agency (CA)	2. Inspection by ONGC / Third Party Inspector (TPI)	3.Inspection by EPC / EPC's Inspection Agency (IA)	4. Inspection by Vendor/ Sub vendor	5. Certificates/compliance/Data/Information to be submitted by vendor for Review/ Approval	6. Stages of Inspection
						General & documents- For Review/Approval /Information
1	A	--	R	H	X	Inspection and Test Plan & for custody transfer application only- FAT procedure
2	A	--	R	H	X	Hydro test Procedure, Painting Procedure, and Calibration Procedure etc. (As applicable).
3	R	--	R	H	X	Material test certificates, Compliance certificates for wetted parts (NACE for sour service) as per ONGC Spec 2004A
4	R	--	R	H	X	Hydro test (as applicable)
5	R	--	R	H	X	NDT records (As applicable).
6	R	--	R	H	X	Type test certificate for Hazardous area classification(Test certificate / Conformity certificate)& Test certificate / Conformity certificate for enclosure class (As Applicable)
7	R	--	R	H	X	Type test certificates for RFI, EMC etc.as per company specification.
						Inspection & Testing- For Witness/ Random Witness
8	RW	--	W	H	X	Final Visual, Dimensional, Tagging, Nameplate check, Mounting type/Process connection check, Cable entry check, Flow direction check, Accessories check etc.
9	RW	--	W	H	X	Functional check, Operation check including self-diagnostics check.
10	RW	--	RW	H	X	Painting & protective coating check (Final DFT) as per ONGC Spec 2005
11	RW	--	RW	H	X	Wet & dry Calibration check from reputed lab like NEL or equivalent as per company specification.
12	W	--	W	W	X	Undertake any other Tests as stated in the relevant FS of the Item and Confirm Compliance of the Item under Inspection to ONGCs FS. FAT at Vendor place.
						IRN For issue by CA/TPI/Contractor IA
13	Is	-	R	H	X	Issue & Documentation at Vendor Works
						IMIR/GIIR at Yard/Offshore
14	W	W		H	X	Verification of items as per IRN
15	IS	R			X	IMIR/GIIR on the basis of IRN

LEGENDS & NOTES: Explained separately

ओएनजीसी ONGC	**Offshore Design Section Engineering Services (ISO – 9001:2008)**	**INSPECTION REQUIREMENT TABLE**	**IRT No.** ODS/INST/IRT/10B **Rev No** 1 **Discipline** Instrumentation

Item: Ultrasonic Flow Meter	**FS No.**-3212	**Inspection Category: C** (For other than Custody Meter)

Activity No	1. Inspection by ONGC / Certification Agency (CA)	2. Inspection by ONGC / Third Party Inspector (TPI)	3.Inspection by EPC / EPC's Inspection Agency (IA)	4. Inspection by Vendor/ Sub vendor	5. Certificates/compliance/Data/Information to be submitted by vendor for Review/ Approval	6. Stages of Inspection
						General & documents- For Review/Approval /Information
1	A	--	R	H	X	Inspection and Test Plan
2	A	--	R	H	X	Hydro test Procedure, Painting Procedure, and Calibration Procedure etc. (As applicable).
3	R	--	R	H	X	Material test certificates, Compliance certificates for wetted parts (NACE for sour service) as per ONGC Spec 2004A
4	R	--	R	H	X	Hydro test (as applicable)
5	R	--	R	H	X	NDT records (As applicable).
6	R	--	R	H	X	Type test certificate for Hazardous area classification(Test certificate / Conformity certificate)& Test certificate / Conformity certificate for enclosure class (As Applicable)
7	R	--	R	H	X	Type test certificates for RFI, EMC etc.as per company specification.
						Inspection & Testing- For Witness/ Random Witness
8	--	--	W	H	X	Final Visual, Dimensional, Tagging, Nameplate check, Mounting type/Process connection check, Cable entry check, Flow direction check, Accessories check etc.
9	--	--	W	H	X	Functional check, Operation check including self-diagnostics check.
10	--	--	RW	H	X	Painting & protective coating check (Final DFT) as per ONGC Spec 2005
11	--	--	RW	H	X	Wet & dry Calibration check from reputed lab like NEL or equivalent as per company specification.
12	--	--	W	W	X	Undertake any other Tests as stated in the relevant FS of the Item and Confirm Compliance of the Item under Inspection to ONGCs FS.
						IRN For issue by CA/TPI/Contractor IA
13	--	-	Is	H	X	Issue & Documentation at Vendor Works
						IMIR/GIIR at Yard/Offshore
14	W	W		H	X	Verification of items as per IRN along with all Inspection Report
15	IS	R			X	IMIR/GIIR on the basis of IRN

LEGENDS & NOTES: Explained separately

ओएनजीसी ONGC	**Offshore Design Section Engineering Services (ISO – 9001:2008)**	**INSPECTION REQUIREMENT TABLE**	**IRT No.** ODS/INST/IRT/11A **Rev No** 1 **Discipline** Instrumentation

Item: Magnetic flow meter				**FS No.**-3213		**Inspection Category: B** (For Custody Meter)
Activity No	1. Inspection by ONGC / Certification Agency (CA)	2. Inspection by ONGC / Third Party Inspector (TPI)	3.Inspection by EPC / EPC's Inspection Agency (IA)	4. Inspection by Vendor/ Sub vendor	5. Certificates/compliance/Data/Information to be submitted by vendor for Review/ Approval	6. Stages of Inspection
						General & documents- For Review/Approval /Information
1	A	--	R	H	X	Inspection and Test Plan & for custody transfer application only- FAT procedure
2	R	--	R	H	X	Material test certificates, Compliance certificates for wetted parts (NACE for sour service) as per ONGC Spec 2004A
3	R	--	R	H	X	NDT records as per company specification. (As applicable).
4	R	--	R	H	X	Hydro test (as applicable)
5	R	--	R	H	X	Type test certificates for the RFI,EMI certification etc. as per company specification (As Applicable)
6	R	--	R	H	X	Type test certificate for Hazardous area classification(Test certificate / Conformity certificate)& Test certificate / Conformity certificate for enclosure class (As Applicable)
						Inspection & Testing- For Witness/ Random Witness
7	RW	--	W	H	X	Final Visual, Dimensional, Tagging, Nameplate check, Mounting type/Process connection check, Cable entry check, Flow direction check , Accessories check etc.
8	RW	--	W	H	X	Functional check, Operation check / Calibration check of meter assembly (as applicable)
9	RW	--	RW	H	X	Painting & protective coating check (Final DFT) as per ONGC Spec 2005
10	W	--	W	W	X	Undertake any other Tests as stated in the relevant FS of the Item and Confirm Compliance of the Item under Inspection to ONGCs FS. FAT at vendor's place
						IRN For issue by CA/TPI/Contractor IA
11	Is	-	R	H	X	Issue & Documentation at Vendor Works
						IMIR/GIIR at Yard/Offshore
12	W	W		H	X	Verification of items as per IRN
13	IS	R			X	IMIR/GIIR on the basis of IRN

LEGENDS & NOTES: Explained separately

ओएनजीसी ONGC	**Offshore Design Section Engineering Services (ISO – 9001:2008)**	**INSPECTION REQUIREMENT TABLE**	**IRT No.** ODS/INST/IRT/11B **Rev No** 1 **Discipline** Instrumentation

Item: Magnetic flow meter	**FS No.**-3213	**Inspection Category: C** (For other than Custody Meter)

Activity No	1. Inspection by ONGC / Certification Agency (CA)	2. Inspection by ONGC / Third Party Inspector (TPI)	3.Inspection by EPC / EPC's Inspection Agency (IA)	4. Inspection by Vendor/ Sub vendor	5. Certificates/compliance/Data/Information to be submitted by vendor for Review/ Approval	6. Stages of Inspection
						General & documents- For Review/Approval /Information
1	A	--	R	H	X	Inspection and Test Plan.
2	R	--	R	H	X	Material test certificates, Compliance certificates for wetted parts (NACE for sour service) as per ONGC Spec 2004A
3	R	--	R	H	X	NDT records as per company specification. (As applicable).
4	R	--	R	H	X	Hydro test (as applicable)
5	R	--	R	H	X	Type test certificates for the RFI,EMI certification etc. as per company specification (As Applicable)
6	R	--	R	H	X	Type test certificate for Hazardous area classification(Test certificate / Conformity certificate)& Test certificate / Conformity certificate for enclosure class (As Applicable)
						Inspection & Testing- For Witness/ Random Witness
7	--	--	W	H	X	Final Visual, Dimensional, Tagging, Nameplate check, Mounting type/Process connection check, Cable entry check, Flow direction check , Accessories check etc.
8	--	--	W	H	X	Functional check, Operation check / Calibration check of meter assembly (as applicable)
9	--	--	RW	H	X	Painting & protective coating check (Final DFT) as per ONGC Spec 2005
10	--	--	W	W	X	Undertake any other Tests as stated in the relevant FS of the Item and Confirm Compliance of the Item under Inspection to ONGCs FS.
						IRN For issue by CA/TPI/Contractor IA
11	--	-	Is	H	X	Issue & Documentation at Vendor Works
						IMIR/GIIR at Yard/Offshore
12	W	W		H	X	Verification of items as per IRN along with all Inspection Report
13	IS	R			X	IMIR/GIIR on the basis of IRN

LEGENDS & NOTES: Explained separately

ओएनजीसी ONGC	**Offshore Design Section Engineering Services (ISO – 9001:2008)**	**INSPECTION REQUIREMENT TABLE**	**IRT No.** ODS/INST/IRT/12A **Rev No** 1 **Discipline** Instrumentation

Item: Turbine Flow Meter	**FS No.**-3207	**Inspection Category: B** (For Custody Meter)

Activity No	1. Inspection by ONGC / Certification Agency (CA)	2. Inspection by ONGC / Third Party Inspector (TPI)	3.Inspection by EPC / EPC's Inspection Agency (IA)	4. Inspection by Vendor/ Sub vendor	5. Certificates/compliance/Data/Information to be submitted by vendor for Review/ Approval	6. Stages of Inspection
						General & documents- For Review/Approval /Information
1	A	--	R	H	X	Inspection and Test Plan.
2	R	--	R	H	X	Material test certificates / Compliance certificates for wetted parts (NACE for sour service) as per ONGC Spec 2004A
3	R	--	R	H	X	NDT records as per company specification. (As applicable).
4	R	--	R	H	X	Hydro/Pressure test (as applicable)
5	R	--	R	H	X	Type test certificates for the RFI, EMI certification etc. as per company specification (As Applicable)
6	R	--	R	H	X	Type test certificate for Hazardous area classification(Test certificate / Conformity certificate)& Test certificate / Conformity certificate for enclosure class (As Applicable)
						Inspection & Testing- For Witness/ Random Witness
7	RW	--	W	H	X	Final Visual, Dimensional, Tagging, Nameplate check, Mounting type, Process connection check, Cable entry check, Flow direction check , Accessories check etc.
8	RW	--	W	H	X	Functional check, Operation check, Calibration check of meter assembly (as applicable)
9	RW	--	RW	H	X	Painting & protective coating check (Final DFT) as per ONGC Spec 2005
10	RW	--	RW	H	X	Painting & protective coating check (Final DFT) as per ONGC Spec 2005
11	RW	--	W	W	X	Undertake any other Tests as stated in the relevant FS of the Item and Confirm Compliance of the Item under Inspection to ONGCs FS.
						IRN For issue by CA/TPI/Contractor IA
12	Is	-	R	H	X	Issue & Documentation at Vendor Place
						IMIR/GIIR at Yard/Offshore
13	W	W		H	X	Verification of items as per IRN
14	IS	R			X	IMIR/GIIR on the basis of IRN

LEGENDS & NOTES: Explained separately

ओएनजीसी ONGC	**Offshore Design Section Engineering Services (ISO – 9001:2008)**	**INSPECTION REQUIREMENT TABLE**	**IRT No.** ODS/INST/IRT/12B **Rev No** 1 **Discipline** Instrumentation

Item: Turbine Flow Meter	**FS No.**-3207	**Inspection Category: C** (For other than Custody Meter)

Activity No	1. Inspection by ONGC / Certification Agency (CA)	2. Inspection by ONGC / Third Party Inspector (TPI)	3.Inspection by EPC / EPC's Inspection Agency (IA)	4. Inspection by Vendor/ Sub vendor	5. Certificates/compliance/Data/Information to be submitted by vendor for Review/ Approval	6. Stages of Inspection
						General & documents- For Review/Approval /Information
1	A	--	R	H	X	Inspection and Test Plan.
2	R	--	R	H	X	Material test certificates / Compliance certificates for wetted parts (NACE for sour service) as per ONGC Spec 2004A
3	R	--	R	H	X	NDT records as per company specification. (As applicable).
4	R	--	R	H	X	Hydro/Pressure test (as applicable)
5	R	--	R	H	X	Type test certificates for the RFI, EMI certification etc. as per company specification (As Applicable)
6	R	--	R	H	X	Type test certificate for Hazardous area classification(Test certificate / Conformity certificate)& Test certificate / Conformity certificate for enclosure class (As Applicable)
						Inspection & Testing- For Witness/ Random Witness
7	--	--	W	H	X	Final Visual, Dimensional, Tagging, Nameplate check, Mounting type, Process connection check, Cable entry check, Flow direction check , Accessories check etc.
8	--	--	W	H	X	Functional check, Operation check, Calibration check of meter assembly (as applicable)
9	--	--	RW	H	X	Painting & protective coating check (Final DFT) as per ONGC Spec 2005
10	--	--	RW	H	X	Painting & protective coating check (Final DFT) as per ONGC Spec 2005
11	--	--	W	W	X	Undertake any other Tests as stated in the relevant FS of the Item and Confirm Compliance of the Item under Inspection to ONGCs FS.
						IRN For issue by CA/TPI/Contractor IA
12	--	-	Is	H	X	Issue & Documentation at Vendor Place
						IMIR/GIIR at Yard/Offshore
13	W	W		H	X	Verification of items as per IRN along with all Inspection Report
14	IS	R			X	IMIR/GIIR on the basis of IRN

LEGENDS & NOTES: Explained separately

ओएनजीसी ONGC	**Offshore Design Section Engineering Services (ISO – 9001:2008)**	**INSPECTION REQUIREMENT TABLE**	**IRT No.** ODS/INST/IRT/13 **Rev No** 1 **Discipline** Instrumentation

Item: DP-Cone meter	**FS No.**-3214	**Inspection Category: C**

Activity No	1. Inspection by ONGC / Certification Agency (CA)	2. Inspection by ONGC / Third Party Inspector (TPI)	3.Inspection by EPC / EPC's Inspection Agency (IA)	4. Inspection by Vendor/ Sub vendor	5. Certificates/compliance/Data/Information to be submitted by vendor for Review/ Approval	6. Stages of Inspection
						General & documents- For Review/Approval /Information
1	A	--	R	H	X	Inspection and Test Plan.
2	R	--	R	H	X	Material test certificates / Compliance certificates for wetted parts (NACE for sour service) as per ONGC Spec 2004A
3	R	--	R	H	X	NDT records as per company specification. (As applicable).
4	R	--	R	H	X	Dye penetration Test for HP & LP Tapping/Socket Welding as ONGC Spec
5	R	--	R	H	X	Hydro/Pressure test (as applicable)
6	R	--	R	H	X	Type test certificates for the RFI, EMI certification etc. as per company specification (As Applicable)
7	R	--	R	H	X	Type test certificate for Hazardous area classification(Test certificate / Conformity certificate)& Test certificate / Conformity certificate for enclosure class (As Applicable)
8	R	--	RW	H	X	Calibration report from internationally accredited laboratory (like NEL,NIST,CEESI,NMI,TCC,SWRI or equivalent)
						Inspection & Testing- For Witness/ Random Witness
9	--	--	W	H	X	Final Visual, Dimensional, Tagging, Nameplate check, Mounting type, Process connection check, Cable entry check, Flow direction check, Accessories check etc.
10	--	--	W	H	X	Functional check , Operation check, Calibration check of meter assembly (as applicable)
11	--	--	RW	H	X	Painting & protective coating check (Final DFT) as per ONGC Spec 2005
12	--	--	W	W	X	Undertake any other Tests as stated in the relevant FS of the Item and Confirm Compliance of the Item under Inspection to ONGCs FS.
						IRN For issue by CA/TPI/Contractor IA
12	--	-	Is	H	X	Issue & Documentation at Vendor Works
						IMIR/GIIR at Yard/Offshore
13	W	W	-	H	X	Verification of items as per IRN along with all Inspection Report
14	IS	R	-	-	X	IMIR/GIIR on the basis of IRN

LEGENDS & NOTES: Explained separately

ओएनजीसी ONGC	**Offshore Design Section Engineering Services (ISO – 9001:2008)**	**INSPECTION REQUIREMENT TABLE**	**IRT No.** ODS/INST/IRT/14 **Rev No** 1 **Discipline** Instrumentation

Item: Orifice Plate Assembly and Restriction Orifice	**FS No.**-3203 & 3204	**Inspection Category: C**

Activity No	1. Inspection by ONGC / Certification Agency (CA)	2. Inspection by ONGC / Third Party Inspector (TPI)	3.Inspection by EPC / EPC's Inspection Agency (IA)	4. Inspection by Vendor/ Sub vendor	5. Certificates/compliance/Data/Information to be submitted by vendor for Review/ Approval	6. Stages of Inspection
						General & documents- For Review/Approval /Information
1	A	--	R	H	X	Inspection and Test Plan
2	A	--	R	H	X	Hydro test Procedure
3	R	--	R	H	X	Material test certificates, Compliance certificates for wetted parts (NACE for sour service) as per ONGC Spec 2004A
4	R	--	R	H	X	Factory test reports
5	R	--	R	H	X	NDT records as per company specification. (As applicable).
6	R	--	R	H	X	Hydro test (as applicable)
						Inspection & Testing- For Witness/ Random Witness
7	--	--	W	H	X	Final Visual, Dimensional(1pc/type/model) , Tagging, Nameplate check, Direction Marking check , Accessories check etc.
8	--	--	RW	H	X	Painting & protective coating check (Final DFT) as per ONGC Spec 2005
9	--	--	W	W	X	Undertake any other Tests as stated in the relevant FS of the Item and Confirm Compliance of the Item under Inspection to ONGCs FS.
						IRN For issue by CA/TPI/Contractor IA
10	--	-	Is	H	X	Issue & Documentation at Vendor Works
						IMIR/GIIR at Yard/Offshore
11	W	W	-	H	X	Verification of items as per IRN along with all Inspection Report
12	IS	R	-	-	X	IMIR/GIIR on the basis of IRN

LEGENDS & NOTES: Explained separately

ओएनजीसी ONGC	**Offshore Design Section Engineering Services (ISO – 9001:2008)**	**INSPECTION REQUIREMENT TABLE**	**IRT No.** ODS/INST/IRT/15 **Rev No** 1 **Discipline** Instrumentation

Item: Electronic Transmitter (PT,DPT,TT,FT & MVT)						**FS No.**-3403, 3302 & 3202 **Inspection Category: C**
Activity No	1. Inspection by ONGC / Certification Agency (CA)	2. Inspection by ONGC / Third Party Inspector (TPI)	3.Inspection by EPC / EPC's Inspection Agency (IA)	4. Inspection by Vendor/ Sub vendor	5. Certificates/compliance/Data/Information to be submitted by vendor for Review/ Approval	6. Stages of Inspection
						General & documents- For Review/Approval /Information
1	A	--	A	H	X	Inspection and Test Plan
2	R	--	R	H	X	Material test certificates, Compliance certificates for wetted parts (NACE for sour service)
3	R	--	R	H	X	NDT records as per company specification (as applicable).
4	R	--	R	H	X	Surface preparation and Protective coating (Visual & Final DFT check) as per ONGC Spec 2005 (As applicable)
5	R	--	R	H	X	Factory test reports, Calibration test Certificates
6	R	--	R	H	X	Type test certificate for Hazardous area classification(Test certificate / Conformity certificate), Test certificate / Conformity certificate for enclosure class, RFI & EMI, SIL2 Certification etc. as per ONGC Spec (As Applicable)
						Inspection & Testing- For Witness/ Random Witness
7	--	--	W	H	X	Final Visual, Dimensional(1pc/type/model/lot), Tagging, Nameplate check ,Mounting type, Process / Pneumatic connection check , Cable entry check, Display Check, Accessories check etc.
8	--	--	RW	H	X	Functional, Operational, Calibration check.
9	--	--	RW	H	X	Check with "HAND HELD COMMUNICATOR" in case of smart type transmitter (Random witnessed 10%)
10	--	--	RW	H	X	Over range test, Hydro test((10% Random Witnessed) (as applicable)
11	--	--	W	W	X	Undertake any other Tests as stated in the relevant FS of the Item and Confirm Compliance of the Item under Inspection to ONGCs FS.
						IRN For issue by CA/TPI/Contractor IA
11	--	-	Is	H	X	Issue & Documentation at Vendor Works
						IMIR/GIIR at Yard/Offshore
12	W	W	-	H	X	Verification of items as per IRN along with all Inspection Report
13	IS	R	-	-	X	IMIR/GIIR on the basis of IRN

LEGENDS & NOTES: Explained separately

ओएनजीसी ONGC	**Offshore Design Section Engineering Services (ISO – 9001:2008)**	**INSPECTION REQUIREMENT TABLE**	**IRT No.** ODS/INST/IRT/16 **Rev No** 1 **Discipline** Instrumentation

Item: Level Transmitter (Radar Type / Displacer Type)	**FS No.**-3103	**Inspection Category: C**

Activity No	1. Inspection by ONGC / Certification Agency (CA)	2. Inspection by ONGC / Third Party Inspector (TPI)	3.Inspection by EPC / EPC's Inspection Agency (IA)	4. Inspection by Vendor/ Sub vendor	5. Certificates/compliance/Data/Information to be submitted by vendor for Review/ Approval	6. Stages of Inspection
						General & documents- For Review/Approval /Information
1	A	--	A	H	X	Inspection and Test Plan
2	A	--	R	H	X	Hydro test procedure, Calibration /Functional Test procedure
3	R	--	R	H	X	Material test certificates, Compliance certificates for wetted parts (NACE for sour service)
4	R	--	R	H	X	NDT records (as applicable).
5	R	--	R	H	X	Surface preparation and Protective coating (Visual & Final DFT check) as per ONGC Spec 2005 (As applicable)
6	R	--	R	H	X	Factory test reports / Calibration test Certificates
7	R	--	R	H	X	Type test certificate for Hazardous area classification(Test certificate / Conformity certificate), Test certificate / Conformity certificate for enclosure class, RFI&EMI, SIL2 Certification etc. as per ONGC Spec (As Applicable)
						Inspection & Testing- For Witness/ Random Witness
8	--	--	RW	H	X	Hydro test(10% Random Witnessed) (as applicable)
9	--	--	W	H	X	Final Visual, Dimensional(1pc/type/model/lot), Tagging, Nameplate check , Mounting type, Process/Pneumatic connection check , Cable entry check, Display Check, C-C Distance as per data sheet , Accessories check etc.
10	--	--	RW	H	X	Functional, Operational , Calibration check .(10% Random Witnessed)
11	--	--	RW	H	X	Check with "HAND HELD COMMUNICATOR" in case of smart type transmitter (Random witnessed 10%)
12	--	--	W	W	X	Undertake any other Tests as stated in the relevant FS of the Item and Confirm Compliance of the Item under Inspection to ONGCs FS.
						IRN For issue by CA/TPI/Contractor IA
13	--	-	Is	H	X	Issue & Documentation at Vendor Works
						IMIR/GIIR at Yard/Offshore
14	W	W	-	H	X	Verification of items as per IRN along with all Inspection Report
15	IS	R	-	-	X	IMIR/GIIR on the basis of IRN

LEGENDS & NOTES: Explained separately

ओएनजीसी ONGC	**Offshore Design Section Engineering Services (ISO – 9001:2008)**	**INSPECTION REQUIREMENT TABLE**	**IRT No.** ODS/INST/IRT/17 **Rev No** 1 **Discipline** Instrumentation

Item: Pressure Gauge and Differential Pressure Gauge	**FS No.**-3401 & 3400	**Inspection Category: C**	

Activity No
1. Inspection by ONGC / Certification Agency (CA)
2. Inspection by ONGC / Third Party Inspector (TPI)
3.Inspection by EPC / EPC's Inspection Agency (IA)
4. Inspection by Vendor/ Sub vendor
5. Certificates/compliance/Data/Information to be submitted by vendor for Review/ Approval
6. Stages of Inspection

	1	2	3	4	5	6
						General & documents- For Review/Approval /Information
1	A	--	R	H	X	Inspection and Test Plan .
2	R	--	R	H	X	Material test certificates, Compliance certificates for wetted parts (NACE for sour service)
3	R	--	R	H	X	NDT records as per company specification (as applicable).
4	R	--	R	H	X	Test Certificates for Vibration test, Fatigue test & Endurance test etc. as per EN-837
5	R	--	R	H	X	Factory test reports, Calibration test Certificates
6	R	--	R	H	X	"Test certificate / Conformity certificate for enclosure class (As applicable).
						Inspection & Testing- For Witness/ Random Witness
7	--	--	RW	H	X	Final Visual, Dimensional(1pc/type/model/lot), Tagging, Nameplate check, Dial check, Mounting type / Process connection check, Glycerin check, Leakage check, Accessories check etc.
8	--	--	RW	H	X	Manifold leak lest(as applicable)
9	--	--	RW	H	X	Functional, Operational, Calibration check
10	--	--	RW	H	X	Over range test.
11	--	--	W	W	X	Undertake any other Tests as stated in the relevant FS of the Item and Confirm Compliance of the Item under Inspection to ONGCs FS.
						IRN For issue by CA/TPI/Contractor IA
12	--	-	Is	H	X	Issue & Documentation at Vendor Place
						IMIR/GIIR at Yard/Offshore
13	W	W	-	H	X	Verification of items as per IRN along with all Inspection Report
14	IS	R	-	-	X	IMIR/GIIR on the basis of IRN

LEGENDS & NOTES: Explained separately

ओएनजीसी ONGC	**Offshore Design Section Engineering Services (ISO – 9001:2008)**	**INSPECTION REQUIREMENT TABLE**	**IRT No.** ODS/INST/IRT/18 **Rev No** 1 **Discipline** Instrumentation

Item: Temperature Gauge And Thermowell	**FS No.**-3300	**Inspection Category: C**

Activity No	1. Inspection by ONGC / Certification Agency (CA)	2. Inspection by ONGC / Third Party Inspector (TPI)	3.Inspection by EPC / EPC's Inspection Agency (IA)	4. Inspection by Vendor/ Sub vendor	5. Certificates/compliance/Data/Information to be submitted by vendor for Review/ Approval	6. Stages of Inspection
						General & documents- For Review/Approval /Information
1	A	--	R	H	X	Inspection and Test Plan
2	R	--	R	H	X	Material test certificates, Compliance certificates for wetted parts (NACE for sour service)
3	R	--	R	H	X	NDT records as per company specification (as applicable).
4	R	--	R	H	X	Factory test reports, Calibration test Certificates
5	R	--	R	H	X	"Test certificate / Conformity certificate for enclosure class (As applicable).
						Inspection & Testing- For Witness/ Random Witness
6	--	--	RW	H	X	Final Visual, Dimensional(1pc/type/model/lot), Tagging, Nameplate check, Dial check, Mounting type / Process connection check, Glycerin check, Leakage check, Accessories check etc.
7	--	--	RW	H	X	Functional Operational / Calibration check
8	--	--	RW	H	X	Hydro test(as applicable)
9	--	--	RW	H	X	Bore concentricity test for Thermowell (as applicable)
10	--	--	W	W	X	Undertake any other Tests as stated in the relevant FS of the Item and Confirm Compliance of the Item under Inspection to ONGCs FS.
						IRN For issue by CA/TPI/Contractor IA
11	--	-	Is	H	X	Issue & Documentation at Vendor Works
						IMIR/GIIR at Yard/Offshore
12	W	W	-	H	X	Verification of items as per IRN along with all Inspection Report
13	IS	R	-	-	X	IMIR/GIIR on the basis of IRN

LEGENDS & NOTES: Explained separately

ओएनजीसी ONGC	**Offshore Design Section Engineering Services (ISO – 9001:2008)**	**INSPECTION REQUIREMENT TABLE**	**IRT No.** ODS/INST/IRT/19 **Rev No** 1 **Discipline** Instrumentation

Item: Temperature Switch						**FS No.**-3301	**Inspection Category: C**
Activity No	1. Inspection by ONGC / Certification Agency (CA)	2. Inspection by ONGC / Third Party Inspector (TPI)	3.Inspection by EPC / EPC's Inspection Agency (IA)	4. Inspection by Vendor/ Sub vendor	5. Certificates/compliance/Data/Information to be submitted by vendor for Review/ Approval	6. Stages of Inspection	
						General & documents- For Review/Approval /Information	
1	A	--	R	H	X	Inspection and Test Plan	
2	R	--	R	H	X	Type test certificates / conformity certificate (As applicable) for specified enclosure class & Hazardous Area Classification.	
3	R	--	R	H	X	Manufacturer's test certificates, NDT report, Hydro test report, Material Test Certificate (As per spec), Compliance Certificates for major bought out items (As applicable).	
						Inspection & Testing- For Witness/ Random Witness	
4	--	--	W	H	X	Final visual, dimensional (1 Pc Per Type/ Model), nameplate check including process connection, Cable entry, blind plugs, accessories check etc.	
5	--	--	RW	H	X	Functional, Calibration checks {As applicable} (Random witness 10%).	
6	--	--	RW	H	X	Insulation resistance check (*Random witness 10%) {As applicable}	
7	--	--	W	W	X	Undertake any other Tests as stated in the relevant FS of the Item and Confirm Compliance of the Item under Inspection to ONGCs FS.	
						IRN For issue by CA/TPI/Contractor IA	
8	--	-	Is	H	X	Issue & Documentation at Vendor Place	
						IMIR/GIIR at Yard/Offshore	
9	W	W	-	H	X	Verification of items as per IRN along with all Inspection Report	
10	IS	R	-	-	X	IMIR/GIIR on the basis of IRN	

LEGENDS & NOTES: Explained separately

ओएनजीसी ONGC	**Offshore Design Section Engineering Services (ISO – 9001:2008)**	**INSPECTION REQUIREMENT TABLE**	**IRT No.** ODS/INST/IRT/20 **Rev No** 1 **Discipline** Instrumentation

Item: Level Gauge						**FS No.**-3100	**Inspection Category: C**
Activity No	1. Inspection by ONGC / Certification Agency (CA)	2. Inspection by ONGC / Third Party Inspector (TPI)	3.Inspection by EPC / EPC's Inspection Agency (IA)	4. Inspection by Vendor/ Sub vendor	5. Certificates/compliance/Data/Information to be submitted by vendor for Review/ Approval	6. Stages of Inspection	
						General & documents- For Review/Approval /Information	
1	A	--	R	H	X	Inspection and Test Plan	
2	R	--	R	H	X	Material test certificates, Compliance certificates for wetted parts (NACE for sour service)	
3	R	--	R	H	X	NDT records (As applicable).	
4	R	--	R	H	X	Type test certificate for Hazardous area classification(Test certificate / Conformity certificate) & Test certificate / Conformity certificate for enclosure class for illuminator (As Applicable)	
						Inspection & Testing- For Witness/ Random Witness	
5	--	--	RW	H	X	Hydro test(as applicable)	
6	--	--	W	H	X	Final Visual, Dimensional (1pc/type/model/lot), Tagging, Nameplate check, Mounting type, Process connection check, Accessories check etc.	
7	--	--	W	H	X	Verify model, type no, Visible length	
8	--	--	RW	H	X	Check illuminator operation & Valve operation (If applicable)	
9	--	--	RW	H	X	Painting & protective coating check(Final DFT) as per ONGC Spec 2005	
10	--	--	W	W	X	Undertake any other Tests as stated in the relevant FS of the Item and Confirm Compliance of the Item under Inspection to ONGCs FS.	
						IRN For issue by CA/TPI/Contractor IA	
11	--	-	Is	H	X	Issue & Documentation at Vendor Works	
						IMIR/GIIR at Yard/Offshore	
12	W	W	-	H	X	Verification of items as per IRN along with all Inspection Report	
13	IS	R	-	-	X	IMIR/GIIR on the basis of IRN	

LEGENDS & NOTES: Explained separately

ओएनजीसी ONGC	**Offshore Design Section Engineering Services (ISO – 9001:2008)**	**INSPECTION REQUIREMENT TABLE**	**IRT No.** ODS/INST/IRT/21 **Rev No** 1 **Discipline** Instrumentation

Item: Instrument Tubes and Instrument Fittings & Valves	**FS No.**-3507	**Inspection Category: C**

Activity No	1. Inspection by ONGC / Certification Agency (CA)	2. Inspection by ONGC / Third Party Inspector (TPI)	3.Inspection by EPC / EPC's Inspection Agency (IA)	4. Inspection by Vendor/ Sub vendor	5. Certificates/compliance/Data/Information to be submitted by vendor for Review/ Approval	6. Stages of Inspection
						General & documents- For Review/Approval /Information
1	A	--	R	H	X	Inspection and Test Plan
2	R	--	R	H	X	Applicable NDT, Hydro Testing and Internal & External coating Procedures
3	R	--	R	H	X	Material test certificates, Traceability records including heat code and NDT records as per ONGC specification.
4	R	--	R	H	X	Factory, Internal test reports, Compliance certificates and Type test report as per ONGC Specification (As applicable).
						Inspection & Testing- For Witness/ Random Witness
5	--	--	W	H	X	Final Surface finish, visual, dimensional, marking check, quantity check, ratings check, heat no. verification etc.
6	--	--	RW	H	X	PMI Test for Alloy Steel (Random witness 10%)
7	--	--	RW	H	X	"Hydrostatic test for Instrument valves. (10%/type)
8	--	--	W	W	X	Undertake any other Tests as stated in the relevant FS of the Item and Confirm Compliance of the Item under Inspection to ONGCs FS.
						IRN For issue by CA/TPI/Contractor IA
9	--	-	Is	H	X	Issue & Documentation at Vendor Works
						IMIR/GIIR at Yard/Offshore
10	W	W	-	H	X	Verification of items as per IRN along with all Inspection Report
11	IS	R	-	-	X	IMIR/GIIR on the basis of IRN

LEGENDS & NOTES: Explained separately

ओएनजीसी ONGC	**Offshore Design Section Engineering Services (ISO – 9001:2008)**	**INSPECTION REQUIREMENT TABLE**	**IRT No.** ODS/INST/IRT/22 **Rev No** 1 **Discipline** Instrumentation

Item: Manual Alarm Station / Sounder / Annunciator / Beacon / Strobe Light	**FS No.**-3500	**Inspection Category: BULK**

Activity No	1. Inspection by ONGC / Certification Agency (CA)	2. Inspection by ONGC / Third Party Inspector (TPI)	3.Inspection by EPC / EPC's Inspection Agency (IA)	4. Inspection by Vendor/ Sub vendor	5. Certificates/compliance/Data/Information to be submitted by vendor for Review/ Approval	6. Stages of Inspection
						General & documents- For Review/Approval /Information
1	A	--	R	H	X	Inspection and Test Plan
2	R	--	R	H	X	Material test certificates, Compliance certificates (As applicable).
3	R	--	R	H	X	Factory test reports, Calibration test certificates, Compliance Certificates, Manufacturer Reports for major bought out components (As applicable).
4	R	--	R	H	X	"Type test certificate for Hazardous area classification & Test certificate / Conformity certificate for enclosure class (As applicable).
						Inspection & Testing- For Witness/ Random Witness
5	--	--	RW	H	X	Final Visual, Dimensional, Tagging, Nameplate check, Display Check, Cable entry check and Accessories check (As applicable).
6	--	--	RW	H	X	Functional & Operation check (As applicable).
7	--	--	RW	W	X	Undertake any other Tests as stated in the relevant FS of the Item and Confirm Compliance of the Item under Inspection to ONGCs FS.
						IRN For issue by CA/TPI/Contractor IA
8	--	-	IS	Is	X	Issue & Documentation at Vendor Works
						IMIR/GIIR at Yard/Offshore
9	W	W	-	H	X	Verification of items as per IRN along with all Inspection Report
10	IS	R	-	H	X	IMIR/GIIR on the basis of IRN

LEGENDS & NOTES: Explained separately

ओएनजीसी ONGC	**Offshore Design Section Engineering Services (ISO – 9001:2008)**	**INSPECTION REQUIREMENT TABLE**	**IRT No.** ODS/INST/IRT/23 **Rev No** 1 **Discipline** Instrumentation

Item: Field panel/Junction box						**FS No.-** 3507	**Inspection Category: BULK**
Activity No	1. Inspection by ONGC / Certification Agency (CA)	2. Inspection by ONGC / Third Party Inspector (TPI)	3.Inspection by EPC / EPC's Inspection Agency (IA)	4. Inspection by Vendor/ Sub vendor	5. Certificates/compliance/Data/Information to be submitted by vendor for Review/ Approval	6. Stages of Inspection	
						General & documents- For Review/Approval /Information	
1	A	--	R	H	X	Inspection and Test Plan.	
2	R	--	R	H	X	Material test certificates, Compliance certificates (As applicable).	
3	R	--	R	H	X	Internal Test Report, Test certificate, Compliance certificate, Manufacturer reports for major bought out components (As applicable).	
4	R	--	R	H	X	"Type test certificate for Hazardous area classification & Test certificate / Conformity certificate for enclosure class (As applicable).	
						Inspection & Testing- For Witness/ Random Witness	
5	--	--	RW	H	X	Final Visual, Dimensional, Model no, Type verification, Workmanship check, Name plate, Tagging check, Earthing point check, Cable entry, Terminals check ,Quantity check ,Certified Blind Plug ,Paint shade , Accessories check etc. (As applicable).	
6	--	--	RW	H	X	Protective coating (Visual & Final DFT check) as per ONGC Spec 2005	
7	--	--	RW	W	X	Undertake any other Tests as stated in the relevant FS of the Item and Confirm Compliance of the Item under Inspection to ONGCs FS.	
						IRN For issue by CA/TPI/Contractor IA	
8	--	--	IS	Is	X	Issue & Documentation at Vendor Works	
						IMIR/GIIR at Yard/Offshore	
9	W	W	-	H	X	Verification of items as per IRN along with all Inspection Report	
10	IS	R	-	H	X	IMIR/GIIR on the basis of IRN	

LEGENDS & NOTES: Explained separately

ओएनजीसी ONGC	**Offshore Design Section Engineering Services (ISO – 9001:2008)**	**INSPECTION REQUIREMENT TABLE**	**IRT No.** ODS/INST/IRT/24 **Rev No** 1 **Discipline** Instrumentation

Item: MCT Blocks						**FS No.-** 3507	**Inspection Category: Bulk**
Activity No	1. Inspection by ONGC / Certification Agency (CA)	2. Inspection by ONGC / Third Party Inspector (TPI)	3.Inspection by EPC / EPC's Inspection Agency (IA)	4. Inspection by Vendor/ Sub vendor	5. Certificates/compliance/Data/Information to be submitted by vendor for Review/ Approval	6. Stages of Inspection	
						General & documents- For Review/Approval /Information	
1	A	--	R	H	X	Inspection and Test Plan	
2	R	--	R	H	X	Material test certificates, Compliance certificates (As applicable).	
3	R	--	R	H	X	"Factory Test Reports, Type Test reports, Compliance certificates (As applicable). "	
						Inspection & Testing- For Witness/ Random Witness	
4	--	--	RW	H	X	Final Visual, Dimensional, Model no, Type verification, Markings check, Accessories check etc. (As applicable).	
5	--	--	RW	W	X	Undertake any other Tests as stated in the relevant FS of the Item and Confirm Compliance of the Item under Inspection to ONGCs FS.	
						IRN For issue by CA/TPI/Contractor IA	
6	--	--	IS	Is	X	Issue & Documentation at Vendor Works	
						IMIR/GIIR at Yard/Offshore	
7	W	W	-	H	X	Verification of items as per IRN along with all Inspection Report	
8	IS	R	-	H	X	IMIR/GIIR on the basis of IRN	

LEGENDS & NOTES: Explained separately

ओएनजीसी ONGC	**Offshore Design Section Engineering Services (ISO – 9001:2008)**	**INSPECTION REQUIREMENT TABLE**	**IRT No.** ODS/INST/IRT/25 **Rev No** 1 **Discipline** Instrumentation

Item: Manual ESD FSD Station & Valves, Fusible Plugs	**FS No.-** 3500	**Inspection Category: C**

Activity No	1. Inspection by ONGC / Certification Agency (CA)	2. Inspection by ONGC / Third Party Inspector (TPI)	3.Inspection by EPC / EPC's Inspection Agency (IA)	4. Inspection by Vendor/ Sub vendor	5. Certificates/compliance/Data/Information to be submitted by vendor for Review/ Approval	6. Stages of Inspection
						General & documents- For Review/Approval /Information
1	A	--	R	H	X	Inspection and Test Plan
2	A	--	R	H	X	Pressure test Procedure, Melt test procedure
3	R	--	R	H	X	Material test certificates, Traceability records and NDT records (As applicable).
4	R	--	R	H	X	In-house test reports (As applicable)
						Inspection & Testing- For Witness/ Random Witness
5	--	--	W	H	X	Final Visual, Dimension, Tagging, Nameplate check, Colour coding check, Temperature rating check, Accessories check etc.
6	--	--	RW	H	X	Verify manual valve operation (Random witness 10%).
7	--	--	RW	H	X	Pressure testing of ESD/ FSD valves (Random witness 10%).
8	--	--	RW	H	X	Melt Test for 1 no. Sample Pcs of Fusible Plugs/ Rating.
9	--	--	RW	H	X	Leak test for fusible plugs (Random witness 10%) (If applicable)
10	--	--	W	W	X	Undertake any other Tests as stated in the relevant FS of the Item and Confirm Compliance of the Item under Inspection to ONGCs FS.
						IRN For issue by CA/TPI/Contractor IA
11	--	-	Is	H	X	Issue & Documentation at Vendor Works
						IMIR/GIIR at Yard/Offshore
12	W	W	-	H	X	Verification of items as per IRN along with all Inspection Report
13	IS	R	-	-	X	IMIR/GIIR on the basis of IRN

LEGENDS & NOTES: Explained separately

ओएनजीसी ONGC	**Offshore Design Section Engineering Services (ISO – 9001:2008)**	**INSPECTION REQUIREMENT TABLE**	**IRT No.** ODS/INST/IRT/26 **Rev No** 1 **Discipline** Instrumentation

Item: CABLE(Electrical, Instrument, Communication and Earthing)						**FS No.-** 3508	**Inspection Category: C**
Activity No	1. Inspection by ONGC / Certification Agency (CA)	2. Inspection by ONGC / Third Party Inspector (TPI)	3.Inspection by EPC / EPC's Inspection Agency (IA)	4. Inspection by Vendor/ Sub vendor	5. Certificates/compliance/Data/Information to be submitted by vendor for Review/ Approval	6. Stages of Inspection	
						General & documents- For Review/Approval /Information	
1	A	--	R	H	X	Inspection and Test Plan	
2	R	--	R	H	X	Internal Test Report, Test certificate, Compliance certificate, Manufacturer reports for major bought out components (As applicable).	
3	R	--	R	H	X	Type test as per ONGC Spec, IEC, Relevant standard (As applicable).	
						Inspection & Testing- For Witness/ Random Witness	
5	--	--	W	H	X	Final Visual, Dimension, Tagging, Nameplate check, Colour coding check, Temperature rating check, Accessories check etc.	
6	--	--	W	H	X	Check final visual, cable type, lengths, size, sheath colour, cable marking check (voltage grade, size, cores), Drum marking check, core configuration, core colours, Outer sheath colour, Rip chord, screening checks, Twisted pair type etc. (As applicable)	
7	--	--	W	H	X	Verify sealing of both cable ends across drum flanges for mechanical & environmental damages	
8	--	--	RW*	H	X	Check for Individual & Overall screen for signal cable. (* Random Witness: 1 cable per type/lot) {As applicable }	
9	--	--	RW*	H	X	HV, IR check of cable (As applicable).	
10	--	--	W	W	X	Undertake any other Tests as stated in the relevant FS of the Item and Confirm Compliance of the Item under Inspection to ONGCs FS.	
						IRN For issue by CA/TPI/Contractor IA	
11	--	-	Is	H	X	Issue & Documentation at Vendor Works	
						IMIR/GIIR at Yard/Offshore	
12	W	W	-	H	X	Verification of items as per IRN along with all Inspection Report	
13	IS	R	-	-	X	IMIR/GIIR on the basis of IRN	

LEGENDS & NOTES: Explained separately

ओएनजीसी ONGC	**Offshore Design Section Engineering Services (ISO – 9001:2008)**	**INSPECTION REQUIREMENT TABLE**	**IRT No.** ODS/INST/IRT/27 **Rev No** 1 **Discipline** Instrumentation

Item: Sub Sea Umbilical						**FS No.-** 3510	**Inspection Category:** B
Activity No	1. Inspection by ONGC / Certification Agency (CA)	2. Inspection by ONGC / Third Party Inspector (TPI)	3.Inspection by EPC / EPC's Inspection Agency (IA)	4. Inspection by Vendor/ Sub vendor	5. Certificates/compliance/Data/Information to be submitted by vendor for Review/ Approval	6. Stages of Inspection	
						General & documents- For Review/Approval /Information	
1	A	--	R	H	X	Inspection and Test Plan	
2	A	--	R	H	X	Test Procedures - Testing (FAT& SAT), Installation, Laying. As per FS 3510	
3	R	--	W	H	X	Check Completeness of bought out items, Accessories viz, JB, mounting accessories as applicable per specs.	
4	R		R	H	X	Material Test certificates/Shop Test Reports/compliance certificates/manufacturer report for major brought out (as applicable)	
5	R		R	H	X	Certificates / conformity certificate (As applicable) for specified enclosure class & Hazardous Area Classification	
						Inspection & Testing- For Witness/ Random Witness	
6	W	--	W	H	X	Final visual, dimensional, marking check, colour check, accessories check, construction of cable	
7	W	--	W	H	X	Tensile characteristic test , cyclic bending test , test on electrical conductors including water bath, Insulation resistance test, pressure test, armour for supplied lot	
8	W	--	W	H	X	Testing as per API 17E & FS 3510 for supplied lot.	
9	W	--	W	W	X	Undertake any other Tests as stated in the relevant FS of the Item and Confirm Compliance of the Item under Inspection to ONGCs FS.	
						IRN For issue by CA/TPI/Contractor IA	
10	Is	-	R	H	X	Issue & Documentation at Vendor Works	
						IMIR/GIIR at Yard/Offshore	
11	W	W	-	H	X	Verification of items as per IRN	
12	R	R	-	-	X	IMIR/GIIR on the basis of IRN	
13	W	W		H	X	SAT/Performance Test in field (offshore platform) by the vendor.	

LEGENDS & NOTES: Explained separately

ओएनजीसी ONGC	**Offshore Design Section Engineering Services (ISO – 9001:2008)**	**INSPECTION REQUIREMENT TABLE**	**IRT No.** ODS/INST/IRT/28 **Rev No** 1 **Discipline** Instrumentation

Item: Senior Orifice Assembly	**FS No.**-3205	**Inspection Category: C**

Activity No	1. Inspection by ONGC / Certification Agency (CA)	2. Inspection by ONGC / Third Party Inspector (TPI)	3.Inspection by EPC / EPC's Inspection Agency (IA)	4. Inspection by Vendor/ Sub vendor	5. Certificates/compliance/Data/Information to be submitted by vendor for Review/ Approval	6. Stages of Inspection
						General & documents- For Review/Approval /Information
1	A	--	R	H	X	Inspection and Test Plan
2	R	--	R	H	X	Hydro test Procedure
3	R	--	R	H	X	Material test certificates, Compliance certificates for wetted parts (NACE for sour service) as per ONGC Spec 2004A
4	R	--	R	H	X	Factory test reports
5	R	--	R	H	X	NDT records as per company specification. (As applicable).
6	R	--	R	H	X	Hydro test (as applicable)
						Inspection & Testing- For Witness/ Random Witness
7	--	--	W	H	X	Final Visual, Dimensional(1pc/type/model) , Tagging, Nameplate check, Direction Marking check , Accessories check etc.
8	--	--	W	H	X	Check Senior Orifice Assembly & Its accessories for completeness & operability (Smooth Orifice changeover Operation)
9	--	--	RW	H	X	Painting & protective coating check (Final DFT) as per ONGC Spec 2005
10	--	--	W	W	X	Undertake any other Tests as stated in the relevant FS of the Item and Confirm Compliance of the Item under Inspection to ONGCs FS.
						IRN For issue by CA/TPI/Contractor IA
11	--	-	Is	H	X	Issue & Documentation at Vendor Works
						IMIR/GIIR at Yard/Offshore
12	W	W	-	H	X	Verification of items as per IRN along with all Inspection Report
13	IS	R	-	-	X	IMIR/GIIR on the basis of IRN

LEGENDS & NOTES: Explained separately

ओएनजीसी ONGC	**Offshore Design Section Engineering Services (ISO – 9001:2008)**	**INSPECTION REQUIREMENT TABLE**	**IRT No.** ODS/INST/IRT/29 **Rev No** 1 **Discipline** Instrumentation

Item: Portable Calibrator	**FS No.**-3605	**Inspection Category: C**

Activity No	1. Inspection by ONGC / Certification Agency (CA)	2. Inspection by ONGC / Third Party Inspector (TPI)	3.Inspection by EPC / EPC's Inspection Agency (IA)	4. Inspection by Vendor/ Sub vendor	5. Certificates/compliance/Data/Information to be submitted by vendor for Review/ Approval	6. Stages of Inspection
						General & documents- For Review/Approval /Information
1	A	--	R	H	X	Quality Plan
2	R	--	R	H	X	Internal Test Certificates / Test Reports
3	R	--	R	H	X	Traceability of calibration records to international standards
						Inspection & Testing- For Witness/ Random Witness
4	--	--	RW	H	X	Visual Tag , Model No. Name Plate check, range, accessories etc. as applicable
5	--	--	RW	H	X	Operational Check
6	--	--	W	W	X	Undertake any other Tests as stated in the relevant FS of the Item and Confirm Compliance of the Item under Inspection to ONGCs FS.
						IRN For issue by CA/TPI/Contractor IA
7	--	-	Is	H	X	Issue & Documentation at Vendor Works
						IMIR/GIIR at Yard/Offshore
8	W	W	-	H	X	Verification of items as per IRN along with all Inspection Report
9	IS	R	-	-	X	IMIR/GIIR on the basis of IRN

LEGENDS & NOTES: Explained separately

ओएनजीसी ONGC	**Offshore Design Section Engineering Services (ISO – 9001:2008)**	**INSPECTION REQUIREMENT TABLE**	**IRT No.** ODS/INST/IRT/30 **Rev No** 1 **Discipline** Instrumentation

Item: Electronic Flow Totalizer	**FS No.**-3201	**Inspection Category: C**

Activity No	1. Inspection by ONGC / Certification Agency (CA)	2. Inspection by ONGC / Third Party Inspector (TPI)	3.Inspection by EPC / EPC's Inspection Agency (IA)	4. Inspection by Vendor/ Sub vendor	5. Certificates/compliance/Data/Information to be submitted by vendor for Review/ Approval	6. Stages of Inspection
						General & documents- For Review/Approval /Information
1	A	--	R	H	X	Inspection Test Plan
2	R	--	R	H	X	Review of internal test / calibration reports.
3	R	--	R	H	X	Type test certificates, conformity certificate (As applicable) for specified enclosure class & Hazardous Area Classification.
						Inspection & Testing- For Witness/ Random Witness
4	--	--	W	H	X	Final visual, dimensional (1 Pc Per Type/ Model), nameplate check including process connection, cable entry, blind plugs, accessories check etc.
5	--	--	RW	H	X	Functional / Calibration check (*Random witness 10%).
6	--	--	W	W	X	Undertake any other Tests as stated in the relevant FS of the Item and Confirm Compliance of the Item under Inspection to ONGCs FS.
						IRN For issue by CA/TPI/Contractor IA
7	--	-	Is	H	X	Issue & Documentation at Vendor Works
						IMIR/GIIR at Yard/Offshore
8	W	W	-	H	X	Verification of items as per IRN along with all Inspection Report
9	IS	R	-	-	X	IMIR/GIIR on the basis of IRN

LEGENDS & NOTES: Explained separately

ओएनजीसी ONGC	**Offshore Design Section Engineering Services (ISO – 9001:2008)**	**INSPECTION REQUIREMENT TABLE**	**IRT No.** ODS/INST/IRT/31 **Rev No** 1 **Discipline** Instrumentation

Item: Pneumatic Pressure Indicating Controller	**FS No.**-3601	**Inspection Category: C**

Activity No	1. Inspection by ONGC / Certification Agency (CA)	2. Inspection by ONGC / Third Party Inspector (TPI)	3.Inspection by EPC / EPC's Inspection Agency (IA)	4. Inspection by Vendor/ Sub vendor	5. Certificates/compliance/Data/Information to be submitted by vendor for Review/ Approval	6. Stages of Inspection
						General & documents- For Review/Approval /Information
1	A	--	R	H	X	Inspection Test Plan
2	R	--	R	H	X	Review of internal test, calibration reports.
3	R	--	R	H	X	Type test certificates, conformity certificate (As applicable) for specified enclosure class & Hazardous Area Classification.
4	R	--	R	H	X	Manufacturer's test certificates/ Compliance Certificates for major bought out items etc. (As applicable).
						Inspection & Testing- For Witness/ Random Witness
5	--	--	RW	H	X	Final visual, dimensional (1 Pc Per Type/ Model), nameplate check, process connection, Pneumatic connections, switch operation checks, blind plugs, accessories check etc. (*Random witness 10%).
6	--	--	RW	H	X	Hydro test {As Applicable} (Random witness 10%).
7	--	--	RW	H	X	Functional, Calibration check {As applicable} (*Random witness 10%).
8	--	--	RW	H	X	Over range protection checks. {As applicable } (*Random witness 10%).
9	--	--	R	H	X	Review of internal test / calibration reports.
10	--	--	R	H	X	Type test certificates / confirmity certificate for specified enclosure class (If Applicable)
11	--	--	RW	H	X	Painting / Protective coating -Final DFT-color code (if applicable) as per ONGC spec. 2005 (*Random witness 10%). (As applicable)
12	--	--	W	W	X	Undertake any other Tests as stated in the relevant FS of the Item and Confirm Compliance of the Item under Inspection to ONGCs FS.
						IRN For issue by CA/TPI/Contractor IA
13	--	-	Is	H	X	Issue & Documentation at Vendor Works
						IMIR/GIIR at Yard/Offshore
14	W	W	-	H	X	Verification of items as per IRN along with all Inspection Report
15	IS	R	-	-	X	IMIR/GIIR on the basis of IRN

LEGENDS & NOTES: Explained separately

ओएनजीसी ONGC	**Offshore Design Section Engineering Services (ISO – 9001:2008)**	**INSPECTION REQUIREMENT TABLE**	**IRT No.** ODS/INST/IRT/32 **Rev No** 1 **Discipline** Instrumentation

Item: Pneumatic Level Switch	**FS No.**-3101	**Inspection Category: C**

Activity No	1. Inspection by ONGC / Certification Agency (CA)	2. Inspection by ONGC / Third Party Inspector (TPI)	3.Inspection by EPC / EPC's Inspection Agency (IA)	4. Inspection by Vendor/ Sub vendor	5. Certificates/compliance/Data/Information to be submitted by vendor for Review/ Approval	6. Stages of Inspection
						General & documents- For Review/Approval /Information
1	A	--	R	H	X	Inspection Test Plan
2	R	--	R	H	X	Review of internal test, calibration reports.
3	R	--	R	H	X	Type test certificates,/ confirmity certificate (As applicable) for specified enclosure class & Hazardous Area Classification.
4	R	--	R	H	X	Manufacturer's test certificates, NDT report, Hydro test report, Material Test Certificate (As per spec), Compliance Certificates for major bought out items (As applicable).
						Inspection & Testing- For Witness/ Random Witness
5	--	--	W	H	X	Final visual, dimensional (1 Pc Per Type/ Model), nameplate check including process connection, Cable entry, blind plugs, accessories check etc.
6	--	--	RW	H	X	Functional / Calibration check {As applicable} (*Random witness 10%).
7	--	--	RW	H	X	Insulation resistance check (*Random witness 10%) {As applicable}
8	--	--	W	H	X	Undertake any other Tests as stated in the relevant FS of the Item and Confirm Compliance of the Item under Inspection to ONGCs FS.
						IRN For issue by CA/TPI/Contractor IA
9	--	-	Is	H	X	Issue & Documentation at Vendor Place
						IMIR/GIIR at Yard/Offshore
11	W	W	-	H	X	Verification of items as per IRN along with all Inspection Report
12	IS	R	-	-	X	IMIR/GIIR on the basis of IRN

LEGENDS & NOTES: Explained separately

ओएनजीसी ONGC	**Offshore Design Section Engineering Services (ISO – 9001:2008)**	**INSPECTION REQUIREMENT TABLE**	**IRT No.** ODS/INST/IRT/33 **Rev No** 1 **Discipline** Instrumentation

Item: Well head Shutdown Panel & Standalone shutdown panel	**FS No.**-3501	**Inspection Category: B**

Activity No	1. Inspection by ONGC / Certification Agency (CA)	2. Inspection by ONGC / Third Party Inspector (TPI)	3.Inspection by EPC / EPC's Inspection Agency (IA)	4. Inspection by Vendor/ Sub vendor	5. Certificates/compliance/Data/Information to be submitted by vendor for Review/ Approval	6. Stages of Inspection
						General & documents- For Review/Approval /Information
1	A	--	R	H	X	Inspection Test Plan
2	A	--	R	H	X	Quality Plan, FAT & SAT Procedure as applicable
3	RW	--	W	H	X	Verify panel components as per BOM / DRWGS
4	R	--	R	H	X	Manufacturer's test certificates, Compliance Certificates for major bought out items viz, Pump, DPG,PG, Pneumatic Horn, solenoid valve, Switch, JB, cable glands, Tube & tube fittings, Panel etc.
5	R	--	R	H	X	Material Certificates (Inclusive of its material correlation chart / Index)
6	R	--	R	H	X	Type test certificates / confirmity certificate for specified enclosure class & Hazardous Area Classification for solenoid valve, pressure switch, JB, level switch, cable glands etc. (As Applicable)
						Inspection & Testing- For Witness/ Random Witness
7	RW	--	W	H	X	Visual, dimensional, workmanship, tagging / name plate check, cable entries, accessories check.
8	RW	--	W	H	X	Leak test of all tubing loops. (*Random witness minimum 10%).
9	RW	--	W	H	X	"FAT (Factory Acceptance Tests) : Complete functional check of panel by simulation of operational logic, verify C&E diagram, visual indications, audible alarm checks, Timer delay in between SSV & SSSV openings, various reset / trip interlocks, operations of Knobs in all WCM as per Test Procedure etc.
10	W	--	W	W	X	Undertake any other Tests as stated in the relevant FS of the Item and Confirm Compliance of the Item under Inspection to ONGCs FS.
						IRN For issue by CA/TPI/Contractor IA
11	Is	-	R	H	X	Issue & Documentation at Vendor Place
						IMIR/GIIR at Yard/Offshore
12	W	W	-	H	X	Verification of items as per IRN
13	R	R	-	-	X	IMIR/GIIR on the basis of IRN
14	W	W		H	X	SAT/Performance Test in field (offshore platform) by the vendor.

LEGENDS & NOTES: Explained separately

ओएनजीसी ONGC	**Offshore Design Section Engineering Services (ISO – 9001:2008)**	**INSPECTION REQUIREMENT TABLE**	**IRT No.** ODS/INST/IRT/34 **Rev No** 1 **Discipline** Instrumentation

Item: Pneumatic Pressure Switch	**FS No.**-3600	**Inspection Category: C**

Activity No	1. Inspection by ONGC / Certification Agency (CA)	2. Inspection by ONGC / Third Party Inspector (TPI)	3.Inspection by EPC / EPC's Inspection Agency (IA)	4. Inspection by Vendor/ Sub vendor	5. Certificates/compliance/Data/Information to be submitted by vendor for Review/ Approval	6. Stages of Inspection
						General & documents- For Review/Approval /Information
1	A	--	R	H	X	Inspection Test Plan
2	R	--	R	H	X	Type test certificates, confirmity certificate (As applicable) for specified enclosure class & Hazardous Area Classification.
3	R	--	R	H	X	Manufacturer's test certificates, Material Test Certificate, Compliance Certificates for major bought out items, NACE (MR-01-75) Report (for wetted parts (As applicable).
						Inspection & Testing- For Witness/ Random Witness
4	--	--	W	H	X	Final visual, dimensional (1 Pc Per Type/ Model), nameplate check including process connection, blind plugs, accessories check, spares, tag, type, cable entry, range etc.
5	--	--	RW	H	X	Functional, Calibration check, Accuracy, Reading scale / enclosure class, repeatability, over range protection {If applicable} (*Random witness 10%).
6	--	--	RW	H	X	Insulation resistance check (*Random witness 10%) {As applicable}
7	--	--	W	W	X	Undertake any other Tests as stated in the relevant FS of the Item and Confirm Compliance of the Item under Inspection to ONGCs FS.
						IRN For issue by CA/TPI/Contractor IA
8	--	-	Is	H	X	Issue & Documentation at Vendor Place
						IMIR/GIIR at Yard/Offshore
9	RW	W	-	H	X	Verification of items as per IRN along with all Inspection Report
10	IS	R	-	-	X	IMIR/GIIR on the basis of IRN

LEGENDS & NOTES: Explained separately

ओएनजीसी ONGC	Offshore Design Section Engineering Services (ISO – 9001:2008)	INSPECTION REQUIREMENT TABLE	IRT No. ODS/INST/IRT/35 Rev No 1 Discipline Instrumentation

Item: Rotameter	**FS No.**-3206	**Inspection Category: C**

Activity No	1. Inspection by ONGC / Certification Agency (CA)	2. Inspection by ONGC / Third Party Inspector (TPI)	3.Inspection by EPC / EPC's Inspection Agency (IA)	4. Inspection by Vendor/ Sub vendor	5. Certificates/compliance/Data/Information to be submitted by vendor for Review/ Approval	6. Stages of Inspection
						General & documents- For Review/Approval /Information
1	A	--	R	H	X	Inspection Test Plan
2	A	--	R	H	X	Hydro test Procedure, Functional Test Procedure
3	R	--	R	H	X	Material test certificates, Compliance certificates for wetted parts (NACE for sour service) as per ONGC Spec 2004A
4	R		R	H	X	Factory test reports
5	R		R	H	X	NDT records as per company specification. (As applicable).
6	R		R	H	X	Hydro test (as applicable)
7	R		R	H	X	Type Test Certificate for Hazardous Area Classification & Test certificate, Confirmity Certificate for enclosure class (As applicable)
						Inspection & Testing- For Witness/ Random Witness
8	--	--	W	H	X	Final Visual, Dimensional(1pc/type/model) , Tagging Nameplate check , Direction Marking check , Accessories check etc.
9	--	--	RW	H	X	Painting & protective coating check (Final DFT) as per ONGC Spec 2005,Rev 4
10	--	--	W	W	X	Undertake any other Tests as stated in the relevant FS of the Item and Confirm Compliance of the Item under Inspection to ONGCs FS.
						IRN For issue by CA/TPI/Contractor IA
11	--	-	Is	H	X	Issue & Documentation at Vendor Place
						IMIR/GIIR at Yard/Offshore
12	W	W	-	H	X	Verification of items as per IRN along with all Inspection Report
12	IS	R	-	-	X	IMIR/GIIR on the basis of IRN

LEGENDS & NOTES: Explained separately

ओएनजीसी ONGC	**Offshore Design Section Engineering Services (ISO – 9001:2008)**	**INSPECTION REQUIREMENT TABLE**	**IRT No.** ODS/INST/IRT/36 **Rev No** 1 **Discipline** Instrumentation

Item: Electrical Pressure Switch	**FS No.**-3402	**Inspection Category: C**

Activity No	1. Inspection by ONGC / Certification Agency (CA)	2. Inspection by ONGC / Third Party Inspector (TPI)	3.Inspection by EPC / EPC's Inspection Agency (IA)	4. Inspection by Vendor/ Sub vendor	5. Certificates/compliance/Data/Information to be submitted by vendor for Review/ Approval	6. Stages of Inspection
						General & documents- For Review/Approval /Information
1	A	--	R	H	X	Inspection Test Plan
2	R	--	R	H	X	Type test certificates, confirmity certificate (As applicable) for specified enclosure class & Hazardous Area Classification.
3	R	--	R	H	X	Manufacturer's test certificates, Material Test Certificate, Compliance Certificates for major bought out items, NACE (MR-01-75) Report (for wetted parts (As applicable).
						Inspection & Testing- For Witness/ Random Witness
4	--	--	W	H	X	Final visual, dimensional (1 Pc Per Type/ Model), nameplate check including process connection, blind plugs, accessories check, spares, tag, type, cable entry, range etc.
5	--	--	RW	H	X	Functional, Calibration check, Accuracy, Reading scale / enclosure class, repeatability, over range protection {If applicable} (*Random witness 10%).
6	--	--	RW	H	X	Insulation resistance check (*Random witness 10%) {As applicable}
7	--	--	W	W	X	Undertake any other Tests as stated in the relevant FS of the Item and Confirm Compliance of the Item under Inspection to ONGCs FS.
						IRN For issue by CA/TPI/Contractor IA
8	--	-	Is	H	X	Issue & Documentation at Vendor Place
						IMIR/GIIR at Yard/Offshore
9	W	W	-	H	X	Verification of items as per IRN along with all Inspection Report
10	IS	R	-	-	X	IMIR/GIIR on the basis of IRN

LEGENDS & NOTES: Explained separately

ओएनजीसी ONGC	**Offshore Design Section Engineering Services (ISO – 9001:2008)**	**INSPECTION REQUIREMENT TABLE**	**IRT No.** ODS/INST/IRT/37 **Rev No** 1 **Discipline** Instrumentation

Item: Electrical Level Switch	**FS No.**-3102	**Inspection Category: C**

Activity No	1. Inspection by ONGC / Certification Agency (CA)	2. Inspection by ONGC / Third Party Inspector (TPI)	3.Inspection by EPC / EPC's Inspection Agency (IA)	4. Inspection by Vendor/ Sub vendor	5. Certificates/compliance/Data/Information to be submitted by vendor for Review/ Approval	6. Stages of Inspection
						General & documents- For Review/Approval /Information
1	A	--	R	H	X	Inspection Test Plan
2	R	--	R	H	X	Type test certificates / confirmity certificate (As applicable) for specified enclosure class & Hazardous Area Classification.
3	R	--	R	H	X	Manufacturer's test certificates, NDT report/ Hydro test Certificate/Material Test Certificate, Compliance Certificates for major bought out items, and NACE (MR-01-75) Report (for wetted parts (As applicable)
						Inspection & Testing- For Witness/ Random Witness
4	--	--	W	H	X	Final visual, dimensional (1 Pc Per Type/ Model), nameplate check including process connection, blind plugs, accessories check, spares, tag, type, cable entry, range etc.
5	--	--	RW	H	X	Functional, Calibration check, Accuracy, Reading scale, enclosure class, repeatability, over range protection {If applicable} (Random witness 10%).
6	--	--	RW	H	X	Insulation resistance check (Random witness 10%) {As applicable}
7	--	--	W	W	X	Undertake any other Tests as stated in the relevant FS of the Item and Confirm Compliance of the Item under Inspection to ONGCs FS.
						IRN For issue by CA/TPI/Contractor IA
8	--	-	Is	H	X	Issue & Documentation at Vendor Place
						IMIR/GIIR at Yard/Offshore
9	W	W	-	H	X	Verification of items as per IRN along with all Inspection Report
10	IS	R	-	-	X	IMIR/GIIR on the basis of IRN

LEGENDS & NOTES: Explained separately

ओएनजीसी ONGC	**Offshore Design Section Engineering Services (ISO – 9001:2008)**	**INSPECTION REQUIREMENT TABLE**	**IRT No.** ODS/INST/IRT/38 **Rev No** 1 **Discipline** Instrumentation

Item: Flow Computer	**FS No.**-3211	**Inspection Category: C**

Activity No	1. Inspection by ONGC / Certification Agency (CA)	2. Inspection by ONGC / Third Party Inspector (TPI)	3.Inspection by EPC / EPC's Inspection Agency (IA)	4. Inspection by Vendor/ Sub vendor	5. Certificates/compliance/Data/Information to be submitted by vendor for Review/ Approval	6. Stages of Inspection
						General & documents- For Review/Approval /Information
1	A	--	R	H	X	Inspection Test Plan
2	R	--	R	H	X	Review of internal test, calibration reports.
3	R	--	R	H	X	Type test certificates, confirmity certificate (As applicable) for specified enclosure class & Hazardous Area Classification.
						Inspection & Testing- For Witness/ Random Witness
4	--	--	W	H	X	Final visual, dimensional (1 Pc Per Type/ Model), nameplate check including process connection, cable entry, blind plugs, accessories check etc.
5	--	--	RW	H	X	Functional, Calibration check (*Random witness 10%).
6	--	--	W	W	X	Undertake any other Tests as stated in the relevant FS of the Item and Confirm Compliance of the Item under Inspection to ONGCs FS.
						IRN For issue by CA/TPI/Contractor IA
7	--	-	Is	H	X	Issue & Documentation at Vendor Place
						IMIR/GIIR at Yard/Offshore
8	W	W	-	H	X	Verification of items as per IRN along with all Inspection Report
9	IS	R	-	-	X	IMIR/GIIR on the basis of IRN

LEGENDS & NOTES: Explained separately

ओएनजीसी ONGC	**Offshore Design Section Engineering Services (ISO – 9001:2008)**	**INSPECTION REQUIREMENT TABLE**	**IRT No.** ODS/INST/IRT/39 **Rev No** 1 **Discipline** Instrumentation

Item: SSIV Actuator and HPU	**FS No.**-3509 & 3506	**Inspection Category: B**

Activity No	1. Inspection by ONGC / Certification Agency (CA)	2. Inspection by ONGC / Third Party Inspector (TPI)	3.Inspection by EPC / EPC's Inspection Agency (IA)	4. Inspection by Vendor/ Sub vendor	5. Certificates/compliance/Data/Information to be submitted by vendor for Review/ Approval	6. Stages of Inspection
						General & documents- For Review/Approval /Information
1	A	--	R	H	X	Inspection Test Plan
2	A	--	R	H	X	Testing Procedure – FAT for individual components as SSIV, Actuator, HPU units & SAT for combined system/Hydro testing/Torque testing etc.
						SSIV Actuator
3	R	--	R	H	X	Material Test Certificate as per spec 3509 (Inclusive of its material correlation chart)
4	R	--	R	H	X	MPI or DPI shall be 100% as applicable for all Welds & machine surface of Casting or Forging as per ONGC FS 3509
5	R	--	R	H	X	Welding and NDE for cast & forged item as per ONGC FS 3509
6	R	--	R	H	X	Type test certificates, conformity certificate (As applicable) of specified enclosure class
7	R	--	R	H	X	Manufacturer's test certificates/ Compliance Certificates for major bought out items viz, Quick Connector, Tube & Fittings, Switches, Fastners etc. (As applicable).
						Inspection & Testing- For Witness/ Random Witness
8	W	--	W	W	X	Undertake any other Tests as stated in the relevant FS of the Item and Confirm Compliance of the Item under Inspection to ONGCs FS.
						SSIV Actuator
9	RW	--	RW	H	X	Actuator hydrostatic test as per ONGC FS 3509
10	R	--	RW	H	X	Torque test for actuator as per ONGC FS 3509, Model No, Serial No. and Type
11	R		W	H	X	Painting / Protective coating as per ONGC spec. FS 3509 clause 4.6
						Hydraulic Power Unit cum Control Panel (HPU)
12	R	--	W	H	X	Visual, dimensional, workmanship, tagging / name plate check, cable entries, accessories check, Display, ESD/FSD Signal, canopy / IP 55 for pneumatic
13	RW	--	W	H	X	Verify panel components as per BOM / DRWGS (*Random witness 10%). IP 65 or better
14	RW	--	W	H	X	Leak test of all tubing loops. (*Random witness 10%).
						IRN For issue by CA/TPI/Contractor IA
15	Is	-	R	H	X	Issue & Documentation at Vendor Place
						IMIR/GIIR at Yard/Offshore
16	RW	W	-	H	X	Verification of items as per IRN
17	R	R	-	-	X	IMIR/GIIR on the basis of IRN
18	W	W		H	X	SAT/Performance Test in field (offshore platform) by the vendor.

LEGENDS & NOTES: Explained separately

ओएनजीसी ONGC	Offshore Design Section Engineering Services (ISO – 9001:2008)	INSPECTION REQUIREMENT TABLE	IRT No. ODS/INST/IRT/40 Rev No 1 Discipline Instrumentation

Item: PLC	**FS No.-C101**	**Inspection Category: B**

Activity No	1. Inspection by ONGC / Certification Agency (CA)	2. Inspection by ONGC / Third Party Inspector (TPI)	3.Inspection by EPC / EPC's Inspection Agency (IA)	4. Inspection by Vendor/ Sub vendor	5. Certificates/compliance/Data/Information to be submitted by vendor for Review/ Approval	6. Stages of Inspection
						General & documents- For Review/Approval /Information
1	A	--	R	H	X	Inspection and Test Plan
2	A	--	R	H	X	FAT & SAT Procedure.
3	R	--	R	H	X	Bill of material including Software / Hardware completeness.
4	R	--	R	H	X	Internal test reports of vendor's QA/QC and Pre FAT signed by Vendor QAD. Certificate from vendor QAD for 30 day burn in period..
5	R	--	R	H	X	Test certificates , Compliance Certificates , Manufacturer Reports
6	R	--	R	H	X	Certificate for specified area classification , certificate for conformal coating , certificate for Enclosure class etc.
7	R	--	R	H	X	Type test certificates for SIL as per company specification. (As Applicable)
8	R	--	R	H	X	Type test certificates for RFI & EMC etc. as per FS.
						Inspection & Testing- For Witness/ Random Witness
9	W	--	W	H	X	Final Visual, Dimensional, Cable entry checks, Tagging , Nameplate check, earthling system, paint shade, Check for Consoles, Spare capacity verification, Accessories check.
10	W	--	W	H	X	Bill of material verification including programming, Software, Hardware completeness.
11	W	--	W	H	X	Heat soak test at vendor's works
						"FAT (Factory Acceptance Tests) : Complete functional check by simulation of operational logic, Logic scheme check as per safe chart/causes & effect diagram by simulation of various I/O's, interlock & shutdown logic, check of visual, audible alarms
						Redundancy check, system diagnostic, CPU failure, CPU & communication loading, power supply failure, check for Console display, keyboard & printer operation, On-line card changeover check, SOE test, interface with Third party devices, (As applicable).
						System response, Scan time check, System configuration check, power supply variation check, Loop checking (100%) etc.
						Trends & Reports, MIS checks etc.
						Noise level measurement as per company specification.
						System I/O map display and Graphics Check (As applicable)
12	RW	--	RW	H	X	Painting / Protective coating -Final DFT & color code (if applicable) as per ONGC Spec. 2005.
13	W	--	W	W	X	Undertake any other Tests as stated in the relevant FS of the Item and Confirm Compliance of the Item under Inspection to ONGCs FS.
						IRN For issue by CA/TPI/Contractor IA
12	Is	-	R	H	X	Issue & Documentation at Vendor Works
						IMIR/GIIR at Yard/Offshore
13	W	W		H	X	Verification of items as per IRN
14	R	R			X	IMIR/GIIR on the basis of IRN
15	W	W		H	X	SAT/Performance Test in field (offshore platform) by the vendor.

LEGENDS & NOTES: Explained separately

ओएनजीसी ONGC	**Offshore Design Section Engineering Services (ISO – 9001:2008)**	**INSPECTION REQUIREMENT TABLE**	**IRT No.** ODS/INST/IRT/41 **Rev No** 1 **Discipline** Instrumentation

Item: Water Cut Meter	**FS No.-**	**Inspection Category:** C

Activity No	1. Inspection by ONGC / Certification Agency (CA)	2. Inspection by ONGC / Third Party Inspector (TPI)	3.Inspection by EPC / EPC's Inspection Agency (IA)	4. Inspection by Vendor/ Sub vendor	5. Certificates/compliance/Data/Information to be submitted by vendor for Review/ Approval	6. Stages of Inspection
						General & documents- For Review/Approval /Information
1	A	--	R	H	X	Inspection and Test Plan
2	A	--	R	H	X	Hydro test Procedure, Functional test procedure(as applicable)
3	R	--	R	H	X	Material test certificates, Compliance certificates for wetted parts (NACE for sour service) as per ONGC Spec 2004A
4	R	--	R	H	X	NDT records (As applicable).
5	R	--	R	H	X	Type test certificate for Hazardous area classification(Test certificate / Conformity certificate)& Test certificate / Conformity certificate for enclosure class,(As Applicable)
6	R	--	R	H	X	Factory test reports, Calibration test certificates /Manufacture certificate/Conformity certificate for major bought out item.
						Inspection & Testing- For Witness/ Random Witness
7	--	--	W	H	X	Hydro test/Leak test (as applicable)
8	--	--	W	H	X	Final Visual, Dimensional(1pc/type/model) , Tagging, Nameplate check, Mounting type/Process/Process connection check , Display check ,Cable entry check ,Flow direction check ,Flange finish check, Accessories check etc.
9	--	--	W	H	X	Functional check of meter assembly (Including input signals, outputs, display check etc.) { As Applicable }
10	--	--	RW	H	X	Painting & protective coating check (Final DFT) as per ONGC Spec 2005,Rev 2
11	--	--	W	H	X	Software package version & license verification (As applicable) (*Random witness 10%).
12	--	--	W	W	X	Undertake any other Tests as stated in the relevant FS of the Item and Confirm Compliance of the Item under Inspection to ONGCs FS.
						IRN For issue by CA/TPI/Contractor IA
13	--	-	Is	H	X	Issue & Documentation at Vendor Place
						IMIR/GIIR at Yard/Offshore
14	W	W		H	X	Verification of items as per IRN along with all Inspection Report
15	IS	R			X	IMIR/GIIR on the basis of IRN

LEGENDS & NOTES: Explained separately

ओएनजीसी ONGC	**Offshore Design Section Engineering Services (ISO – 9001:2008)**	**INSPECTION REQUIREMENT TABLE**	**IRT No.** ODS/INST/IRT/42 **Rev No** 1 **Discipline** Instrumentation

Item: Wet Gas Meter with Flow Computer						**FS No.**-3215	**Inspection Category:** B
Activity No	1. Inspection by ONGC / Certification Agency (CA)	2. Inspection by ONGC / Third Party Inspector (TPI)	3.Inspection by EPC / EPC's Inspection Agency (IA)	4. Inspection by Vendor/ Sub vendor	5. Certificates/compliance/Data/Information to be submitted by vendor for Review/ Approval	6. Stages of Inspection	
						General & documents- For Review/Approval /Information	
1	A	--	A	H	X	Inspection and Test Plan	
2	A	--	R	H	X	Functional test procedure (as applicable), Painting Procedure, Hydro test Procedure, Calibration Procedure, FAT Procedure.	
3	R	--	R	H	X	Engineering Document: Check availability of approved Design Drawing, Data Sheets, Calculations, Clarifications, Applicable Standards/ Specifications. Vendor catalogues and any other relevant documents	
4	R	--	R	H	X	Material test certificates / Compliance certificates for wetted parts (NACE for sour service) as per ONGC Spec 2004A	
5	R	--	R	H	X	NDT records (As applicable).	
6	R	--	R	H	X	Type test certificate for Hazardous area classification(Test certificate, / Conformity certificate)& Test certificate / Conformity certificate for enclosure class, IP Certificate , Safe Exposure Limit Certificate, Inspection Report (As Applicable)	
7	R	--	R	H	X	Factory test reports, Calibration test certificates /Manufacture certificate/Conformity certificate for major bought out item.	
						Inspection & Testing- For Witness/ Random Witness	
8	RW	--	W	H	X	Hydro test/Leak test (as applicable)	
9	R	--	R	R	X	Assembly of all component, i.e. Pressure Transmitter, Temperature Transmitter, Differential Pressure Transmitter, Instrumentation related piping & tubing, Gamma Ray Sources & Detector , Flow Computer JB's wiring & Termination, earthing etc.	
10	W	--	W	R	X	FAT & Final Calibration: Verification of power supply check, serial communication Check, Interference with Flow Computer, Battery backup test as applicable, I/o Check, Display check, Diagnosis check, data logging check, alarm check, communication check. Factory calibration of wet gas flow meter with flow computer as per specified range and verification of accuracy	
11	W		W	R	X	Final Visual, Dimensional(1pc/type/model) , Tagging, Nameplate check , Mounting type/Process/Process connection check , Display check ,Cable entry check ,Flow direction check ,Flange finish check, Accessories check etc.	
12	RW	--	W	R	X	Functional check of meter assembly (Including input signals, outputs, display check etc.) { As Applicable }	
13	RW	--	W	R	X	Painting & protective coating check (Final DFT) as per ONGC Spec 2005,Rev 2	
14	RW	--	W	R	X	Software package version & license verification (As applicable) (*Random witness 10%).	
15	W	--	W	W	X	Undertake any other Tests as stated in the relevant FS of the Item and Confirm Compliance of the Item under Inspection to ONGCs FS.	
						IRN For issue by CA/TPI/Contractor IA	
17	Is	-	R	H	X	Issue & Documentation at Vendor Place	
						IMIR/GIIR at Yard/Offshore	
18	W	W		H	X	Verification of items as per IRN	
19	IS	R			X	IMIR/GIIR on the basis of IRN	

LEGENDS & NOTES: Explained separately

ओएनजीसी ONGC	Offshore Design Section Engineering Services (ISO – 9001:2008)	INSPECTION REQUIREMENT TABLE	IRT No. ODS/INST/IRT/43 Rev No 1 Discipline Instrumentation

Item: Flow Switch						FS No.-3200	Inspection Category: C
Activity No	1. Inspection by ONGC / Certification Agency (CA)	2. Inspection by ONGC / Third Party Inspector (TPI)	3.Inspection by EPC / EPC's Inspection Agency (IA)	4. Inspection by Vendor/ Sub vendor	5. Certificates/compliance/Data/Information to be submitted by vendor for Review/ Approval	6. Stages of Inspection	
						General & documents- For Review/Approval /Information	
1	A	--	R	H	X	Inspection and Test Plan	
2	R	--	R	H	X	Type test certificates, conformity certificate (As applicable) for specified enclosure class & Hazardous Area Classification.	
3	R	--	R	H	X	Manufacturer's test certificates, NDT report, Hydro test report, Material Test Certificate (As per spec), Compliance Certificates for major bought out items (As applicable).	
						Inspection & Testing- For Witness/ Random Witness	
4	--	--	W	H	X	Final visual, dimensional (1 Pc Per Type/ Model), nameplate check including process connection, Cable entry, blind plugs, accessories check etc.	
5	--	--	RW	H	X	Functional, Calibration check {As applicable} (Random witness 10%).	
6	--	--	RW	H	X	Insulation resistance check (*Random witness 10%) {As applicable}	
7	--	--	W	W	X	Undertake any other Tests as stated in the relevant FS of the Item and Confirm Compliance of the Item under Inspection to ONGCs FS.	
						IRN For issue by CA/TPI/Contractor IA	
8	-	-	Is	H	X	Issue & Documentation at Vendor Place	
						IMIR/GIIR at Yard/Offshore	
9	W	W	-	H	X	Verification of items as per IRN along with all Inspection Report	
10	IS	R	-	-	X	IMIR/GIIR on the basis of IRN	

LEGENDS & NOTES: Explained separately

ONGC	Offshore Design Section Engineering Services ISO – 9001:2008	LIST OF IRTs (INSPECTION REQUIREMENT TABLE) & APPROVAL	Date	18.11.2016
			Discipline	STRUCTURE
			Revision	1
			Page:	*1 OF 1*

Sr. no.	Item Description	IRT No.	Inspection Category	Rev. No.	Rev. Date
1	Steel material plate	ODS/STR/IRT/01	Bulk	01	18.11.2016
2	Steel material pipe	ODS/STR/IRT/02	Bulk	01	18.11.2016
3	Steel material - rolled section	ODS/STR/IRT/03	Bulk	01	18.11.2016
4	Aluminum Heli deck	ODS/STR/IRT/04	C	01	18.11.2016
5	Electro forged grating & treads from cellar deck & above (CS)	ODS/STR/IRT/05	Bulk	01	18.11.2016
6	Electro forged grating & treads below cellar deck (SS)	ODS/STR/IRT/06	Bulk	01	18.11.2016
7	CS Handrail from cellar Deck & above	ODS/STR/IRT/07	Bulk	01	18.11.2016
8	Stainless Steel Handrail below cellar Deck	ODS/STR/IRT/08	Bulk	01	18.11.2016
10	Rubber product - 1.Shock cell & Shear fender, 2. Rub-strips & 3. Rotating bumper ring	ODS/STR/IRT/09	B	01	18.11.2016
9	Rubber product - 1. Grout seal, 2. Diaphragm closure	ODS/STR/IRT/09A	C	01	18.11.2016
11	Architectural material (spec. 6011) - 14 numbers	ODS/STR/IRT/10	C	01	18.11.2016
12	Marine growth preventer (MGP)	ODS/STR/IRT/11	Bulk	01	18.11.2016
13	Marine Paints (Protective coating) for offshore structure	ODS/STR/IRT/12	Bulk	01	18.11.2016
14	Maintenance Marine Paint (Protective Coating)	ODS/STR/IRT/12A	Bulk	01	18.11.2016

Prepared / Revised By	Reviewed By	Approved By
G.Jana/M.R. Shete	M.R. Shete	R.K..Jain

ओएनजीसी ONGC	Offshore Design Section Engineering Services ISO – 9001:2008	INSPECTION REQUIREMENT TABLE		IRT No.	ODS/STR/IRT/01
				Rev. No.	1
				Discipline	STRUCTURE

ITEM : STEEL MATERIAL - PLATE | **INSPECTION CATEGORY :BULK**

Activity	1. Inspection by ONGC / Certification Agency.(CA)	2. Inspection by ONGC / Third Party Inspection(TPI)	3.Inspection by EPC / EPC's Inspection Agency (IA)	4. Inspection by Vendor/ Sub Vendor (MILL)	5. Certificates/compliance/Data/Information to be submitted by vendor for Review/ Approval	6.Stage of Inspection Involved
						General & documents- For Review/Approval /Information
1	A	-	-	H	X	Inspection & Test Plan.
2	R	-	-	R	X	Mill Test Certificate & Steel Material Manufacturing Process shall comply to Clause No. 1.1 & all relevant sub Clauses under Clause no. 1.1 of ONGC Spec 6001F.
						Inspection & Testing- For Witness/ Random Witness
3	-	-	RW one sample per Heat/cast	W	-	Plate mateial identification with respect to Mill test Certificate, marking on plate in compliance to ONGC Spec 6001F. Clause No. 1.1 & all relevant sub Clauses under Clause no. 1.1.
						IRN For issue by CA/TPI/Contractor IA/Vender QA
4	-	-	Is	H	X	Issue & Documentation
						IMIR/GIIR at Yard
5	W	W	-	H	X	Verification of items as per IRN at Yard: Plate mateial identification at Fabrication Yard with respect to Mill test Certificate, marking on plate in compliance to ONGC Spec 6001F. Clause No. 1.1 & all relevant sub Clauses under Clause no. 1.1.
6	Is	R	-	H	X	Issue & Documentation on the basis of IRN

LEGENDS & NOTES : Expalined seperatetely

FORMAT No.	Ref. PROCEDURE No.	ISSUE No.	REV. No.	REV. DATE:
ODS/SOF/004A	ODS/SOP/023	02	00	08.03.2016

ओएनजीसी ONGC	Offshore Design Section Engineering Services ISO – 9001:2008	INSPECTION REQUIREMENT TABLE		IRT No.	ODS/STR/IRT/02
				Rev. No.	1
				Discipline	STRUCTURE

ITEM : STEEL MATERIAL - PIPE — **INSPECTION CATEGORY :BULK**

Activity	1. Inspection by ONGC / Certification Agency.(CA)	2. Inspection by ONGC / Third Party Inspection(TPI)	3.Inspection by EPC / EPC's Inspection Agency (IA)	4. Inspection by Vendor/ Sub Vendor (MILL)	5. Certificates/compliance/Data/Information to be submitted by vendor for Review/ Approval	6.Stage of Inspection Involved
						General & documents- For Review/Approval /Information
1	A	-	-	H	X	Inspection & Test Plan.
2	R	-	-	R	X	PQR, WPS,NDT Reports, Inspection reports, Mill Test Certificate, Steel Material Manufacturing Process shall comply to Clause No. 1.1 & all relevant sub Clauses under Clause no. 1.1 & sub clauses of ONGC Spec 6001F.
						Pipe Rolling (as per API 2B or API 5L) in API Lisenced Mill & Inspection & Testing- For Witness/ Random Witness
3	-	-	RW one sample per Heat/Cast	W	H	Inspection of Steel Plate Material at Pipe rolling Mill with respect to Mill test Certificate and acceptance of material
4	-	-	-	W	H	Rolling of Plate for manufacturing single seam pipe and welding
5	-	-	-	W	H	Welding shall be carried out as per ONGC Spec 2009 with Inspection duly witness by Mill appointed CA / TPI.
6	-	-	RW	W	H	Dimention control Inspection as per ONGC Spec 6001F & Respective Code duly witness by Mill appointed CA / TPI.
7	-	-	-	W	H	Inspection of Steel Pipe with respect to marking on Pipe with Rolling Mill Inspection Report, Test Results and Steel Plate Material Mill Test Certificate, Dimention check in compliance to ONGC Spec 6001F. Clause No. 1.1 & all relevant sub Clauses under Clause no. 1.1.
						IRN For issue by CA/TPI/Contractor IA/Vender QA
8	-	-	Is	H	X	Issue & Documentation
						IMIR/GIIR at Yard
9	W	W	-	H	X	Verification of items as per IRN at Yard: Inspection of Steel Pipe with respect to marking on Pipe with Rolling Mill Inspection Report, Test Results and Steel Plate Material Mill Test Certificate, Dimention check in compliance to ONGC Spec 6001F. Clause No. 1.1 & all relevant sub Clauses under Clause no. 1.1.
10	Is	R	-	H	X	Issue & Documentation on the basis of IRN

LEGENDS & NOTES : Expalined seperatetely

FORMAT No.	Ref. PROCEDURE No.	ISSUE No.	REV. No.	REV. DATE:
ODS/SOF/004A	ODS/SOP/023	02	00	08.03.2016

ओएनजीसी ONGC	Offshore Design Section Engineering Services ISO – 9001:2008	INSPECTION REQUIREMENT TABLE		IRT No.	ODS/STR/IRT/03
				Rev. No.	1
				Discipline	STRUCTURE

ITEM : STEEL MATERIAL - ROLLED SECTION | **INSPECTION CATEGORY :BULK**

Activity	1. Inspection by ONGC / Certification Agency.(CA)	2. Inspection by ONGC / Third Party Inspection(TPI)	3.Inspection by EPC / EPC's Inspection Agency (IA)	4. Inspection by Vendor/ Sub Vendor (MILL)	5. Certificates/compliance/Data/Information to be submitted by vendor for Review/ Approval	6.Stage of Inspection Involved
						General & documents- For Review/Approval /Information
1	A	-	-	H	X	Inspection & Test Plan.
2	R	-	-	H	X	Steel Material Manufacturing Process shall comply to ONGC Spec 6001F. Clause No. 1.1 & all relevant sub Clauses under Clause no. 1.1. MILL TEST CERTIFICATE shall report with all required Test results as indicated under relevant Sub Clauses under Clause No. 1.1.
						Inspection & Testing- For Witness/ Random Witness
3	-	-	RW one sample per heat/cast	W	H	Inspection of Steel Rolled Section Material (Marking provided & colour code) at Fabrication Yard with respect to Mill test Certificate, dimension check shall be carried out as per ONGC Spec 6001F. Clause No. 1.1 & all relevant sub Clauses under Clause no. 1.1.
						IRN For issue by CA/TPI/Contractor IA/Vender QA
4	-	-	Is	H	X	Issue & Documentation
						IMIR/GIIR at Yard
5	W	W	-	H	X	Verification of items as per IRN at Yard: Inspection of Steel Rolled Section Material (Marking provided & colour code) at Fabrication Yard with respect to Mill test Certificate, dimension check shall be carried out as per ONGC Spec 6001F. Clause No. 1.1 & all relevant sub Clauses under Clause no. 1.1.
6	Is	R	-	H	X	Issue & Documentation on the basis of IRN

LEGENDS & NOTES : Expalined seperatetely

ओएनजीसी ONGC	Offshore Design Section Engineering Services ISO – 9001:2008	INSPECTION REQUIREMENT TABLE		IRT No.	ODS/STR/IRT/04
				Rev. No.	1
				Discipline	STRUCTURE

ITEM : Alluminium Helideck — **INSPECTION CATEGORY : C**

Activity	1. Inspection by ONGC / Certification Agency.(CA)	2. Inspection by ONGC / Third Party Inspection(TPI)	3.Inspection by EPC / EPC's Inspection Agency (IA)	4. Inspection by Vendor/ Sub Vendor (MILL)	5. Certificates/compliance/Data/Information to be submitted by vendor for Review/ Approval	6.Stage of Inspection Involved
						General & documents- For Review/Approval /Information
1	A	-		H	X	Inspection & Test Plan.
2	R	-	-	H	X	Structural Design Report of Aluminum Helideck,Helicopter landing net, Alluminium Material MILL TEST CERTIFICATE, NDT, welding Inspection reports shall be provided incompliance to ONGC Spec 6001F Clause No. 1.2.0 & all relevant sub Clauses under Clause no. 1.2.0 with Design certification.
						Inspection & Testing- For Witness/ Random Witness
3	-	-	W at yard	W	H	Inspection of HeliDeck along with Alluminium Material Mill Test Certificate, Helicopter landing net, Design Certification and all Welding & Dimension control Inspection Report. Refer Clause No. 1.2.0 & Sub clauses and Approved PS.
						IRN For issue by CA/TPI/Contractor IA/Vender QA
4	-	-	Is	H	X	Issue & Documentation
						IMIR/GIIR at Yard
5	W	W	-	H	X	Verification of items as per IRN at Yard: Inspection of HeliDeck at Fabrication Yard along with Alluminium Material Mill Test Certificate, Design Certification and all Welding & Dimension control Inspection Report. Refer Clause No. 1.2.0 & Sub clauses and Approved PS.
6	Is	R	-	H	X	Issue & Documentation on the basis of IRN

LEGENDS & NOTES : Expalined seperatetely

ओएनजीसी ONGC	Offshore Design Section Engineering Services ISO – 9001:2008	INSPECTION REQUIREMENT TABLE		IRT No.	ODS/STR/IRT/05
				Rev. No.	1
				Discipline	STRUCTURE

ITEM : ELECTRO FORGED GRATING & TREAD FROM CELLAR DECK & ABOVE (CS)

INSPECTION CATEGORY : BULK

Activity	1. Inspection by ONGC / Certification Agency.(CA)	2. Inspection by ONGC / Third Party Inspection(TPI)	3.Inspection by EPC / EPC's Inspection Agency (IA)	4. Inspection by Vendor/ Sub Vendor (MILL)	5. Certificates/compliance/Data/Information to be submitted by vendor for Review/ Approval	6.Stage of Inspection Involved
						General & documents- For Review/Approval /Information
1	A	-	W	H	X	Inspection & Test Plan & SAMPLE approval
2	R	-	R	H	X	Sample report & Procedure confirming to Grating manufactured by Electro-forged weld process. Steel sections (Mill Test Certificate) shall comply to ONGC clause no. 1.3.2.1 of Spec 6001F.
3	R	-	R	H	X	Test Report for Galvanization of Grating as per spec 2005.
4	R	-	R	H	X	**Coating the galvanized surface with coating system no. 5 of spec 2005.**
						Inspection & Testing- For Witness/ Random Witness
5	-	-	RW	H	X	Inspection of Electro forged Grating shall be carried out as per Clause no. 1.3.2.1 & sub clauses of Spec 6001F and Spec 2005.
						IRN For issue by CA/TPI/Contractor IA
6	-	-	Is	H	X	Issue & Documentation at Vendor Place (MILL)
						IMIR/GIIR at Yard
7	Rw	Rw		H	X	Verification of items as per IRN at Yard: Inspection of Electro forged Grating shall be carried out as per Clause no. 1.3.2.1 & sub clauses of Spec 6001F and Spec 2005.
8	Is	R		H	X	Issue & Documentation on the basis of IRN

LEGENDS & NOTES : Expalined seperatetely

FORMAT No.	Ref. PROCEDURE No.	ISSUE No.	REV. No.	REV. DATE:
ODS/SOF/004A	ODS/SOP/023	02	00	08.03.2016

ओएनजीसी ONGC	Offshore Design Section Engineering Services ISO – 9001:2008	INSPECTION REQUIREMENT TABLE		IRT No.	ODS/STR/IRT/06
				Rev. No.	1
				Discipline	STRUCTURE

ITEM : ELECTRO FORGED GRATING & TREADS BELOW CELLAR DECK (SS) — **INSPECTION CATEGORY :BULK**

Activity	1. Inspection by ONGC / Certification Agency.(CA)	2. Inspection by ONGC / Third Party Inspection(TPI)	3.Inspection by EPC / EPC's Inspection Agency (IA)	4. Inspection by Vendor/ Sub Vendor (MILL)	5. Certificates/compliance/Data/Information to be submitted by vendor for Review/ Approval	6.Stage of Inspection Involved
						General & documents- For Review/Approval /Information
1	A	-	W	H	X	Inspection & Test Plan & SAMPLE approval
2	R	-		H	X	Sample report & Procedure confirming to Grating manufactured by Electro-forged weld process. Steel sections (Mill Test Certificate) shall comply to ONGC clause no. 1.3.2.2 of Spec 6001F.
						Inspection & Testing- For Witness/ Random Witness
3	-	-	RW	W	H	Inspection of Electro forged Grating shall be carried out as per Clause no. 1.3.2.2 & sub clauses of Spec 6001F and Spec 2005.
						IRN For issue by CA/TPI/Contractor IA/Vender's QA
4	-	-	Is	H	X	Issue & Documentation at Vendor Place (MILL)
						IMIR/GIIR at Yard
5	Rw	Rw	-	H	X	Verification of items as per IRN at Yard: Inspection of Electro forged Grating shall be carried out as per Clause no. 1.3.2.2 & sub clauses of Spec 6001F and Spec 2005.
6	Is	R	-	H	X	Issue & Documentation on the basis of IRN

LEGENDS & NOTES : Expalined seperatetely

FORMAT No.	Ref. PROCEDURE No.	ISSUE No.	REV. No.	REV. DATE:
ODS/SOF/004A	ODS/SOP/023	02	00	08.03.2016

ओएनजीसी ONGC	Offshore Design Section Engineering Services ISO – 9001:2008	INSPECTION REQUIREMENT TABLE		IRT No.	ODS/STR/IRT/07
				Rev. No.	1
				Discipline	STRUCTURE
ITEM : Carbon steel Handrail from cellar Deck & above				INSPECTION CATEGORY : BULK	

Activity	1. Inspection by ONGC / Certification Agency.(CA)	2. Inspection by ONGC / Third Party Inspection(TPI)	3.Inspection by EPC / EPC's Inspection Agency (IA)	4. Inspection by Vendor/ Sub Vendor (MILL)	5. Certificates/compliance/Data/Information to be submitted by vendor for Review/ Approval	6.Stage of Inspection Involved
						General & documents- For Review/Approval /Information
1	A	-	W	H	X	Inspection & Test Plan & Sample approval.
2	R	-	R	H	X	Structural Design Report of C S Material MILL TEST CERTIFICATE, NDT, welding Inspection reports shall be provided incompliance to Clause no. 1.3.3 of ONGC Spec 6001F.
						Inspection & Testing- For Witness/ Random Witness
3	-	-	RW	H	X	Inspection of Handrail along with C S material Mill Test Certificate, Design Certification and all Welding & Dimension control Inspection Report. Refer Clause No. 1.3.3 of Spec. 6001F and Approved PS.
						IRN For issue by CA/TPI/Contractor IA
4	-	-	Is	H	X	Issue & Documentation at Vendor Place (HANDRAIL MANUFACTURING PLACE)
						IMIR/GIIR at Yard
5	Rw	Rw	-	H	X	Verification of items as per IRN at Yard: Inspection of Handrail at Fabrication Yard along with C S Material Mill Test Certificate, Design Certification and all Welding & Dimension control Inspection Report. Refer Clause No. 1.3.3 of Spec. 6001F and Approved PS.
6	Is	R	-	H	X	Issue & Documentation on the basis of IRN

LEGENDS & NOTES : Expalined seperatetely

FORMAT No.	Ref. PROCEDURE No.	ISSUE No.	REV. No.	REV. DATE:
ODS/SOF/004A	ODS/SOP/023	02	00	08.03.2016

ओएनजीसी ONGC	Offshore Design Section Engineering Services ISO – 9001:2008	INSPECTION REQUIREMENT TABLE		IRT No.	ODS/STR/IRT/08
				Rev. No.	1
				Discipline	STRUCTURE

ITEM : Stainless Steel Handrail below cellar Deck — **INSPECTION CATEGORY : BULK**

Activity	1. Inspection by ONGC / Certification Agency.(CA)	2. Inspection by ONGC / Third Party Inspection(TPI)	3.Inspection by EPC / EPC's Inspection Agency (IA)	4. Inspection by Vendor/ Sub Vendor (MILL)	5. Certificates/compliance/Data/Information to be submitted by vendor for Review/ Approval	6.Stage of Inspection Involved
						General & documents- For Review/Approval /Information
1	A	-	W	H	X	Inspection & Test Plan & Sample Approval.
2	R	-	R	H	X	Structural Design Report of Stainless Steel Handrail, Material Mill Test Certificate, Sample report & Procedure confirming to Grating manufactured by Electro-forged weld process in compliance to Clause no. 1.3.3 of ONGC Spec 6001F.
						Inspection & Testing- For Witness/ Random Witness
3	-	-	W	H	X	Inspection of Handrail along with Design Report, Stainless Steel Material Mill Test Certificate and all Welding & Dimension control Inspection Report. Refer Clause No. 1.3.3 of Spec. 6001F.
						IRN For issue by CA/TPI/Contractor IA
4	-	-	Is	H	X	Issue & Documentation at Vendor Place (HANDRAIL MANUFACTURING PLACE)
						IMIR/GIIR at Yard
5	Rw	Rw	-	H	X	Verification of items as per IRN at Yard: Inspection of Handrail at Fabrication Yard along with Design Report, Stainless Steel Material Mill Test Certificate and all Welding & Dimension control Inspection Report. Refer Clause No. 1.3.3 of Spec. 6001F.
6	Is	R	-	H	X	Issue & Documentation on the basis of IRN

LEGENDS & NOTES : Expalined seperatetely

FORMAT No.	Ref. PROCEDURE No.	ISSUE No.	REV. No.	REV. DATE:
ODS/SOF/004A	ODS/SOP/023	02	00	08.03.2016

ओएनजीसी ONGC	Offshore Design Section Engineering Services ISO – 9001:2008	INSPECTION REQUIREMENT TABLE		IRT No.	ODS/STR/IRT/09
				Rev. No.	1
				Discipline	STRUCTURE

ITEM : RUBBER PRODUCT - 1.Shock Cell & Shear Fender, 2. Rub-Strips & 3. Rotating Bumper Ring

INSPECTION CATEGORY : B

Activity	1. Inspection by ONGC / Certification Agency.(CA)	2. Inspection by ONGC / Third Party Inspection(TPI)	3.Inspection by EPC / EPC's Inspection Agency (IA)	4. Inspection by Vendor/ Sub Vendor (MILL)	5. Certificates/compliance/Data/Information to be submitted by vendor for Review/ Approval	6.Stage of Inspection Involved
						General & documents- For Review/Approval /Information
1	A	-	R	H	X	Inspection & Test Plan.
2	R	-	R	H	X	Rubber product Manufacturing Procedures shall comply to ASTM D2000 and ONGC Spec 6001F Clause No. 1.5.0 & all relevant sub Clauses. Tubulars for shock cell shall be as per API 2B/API 5L
						Inspection & Testing- For Witness/ Random Witness
3	W		W	H	X	Inspection of Rubber product shall comply to Clause no. 1.5.0 & sub clauses of spec, 6001F and as per recommendation of ASTM D2000. Adhesion test of neoprene with tubulars of shock cell.
						IRN For issue by CA/TPI/Contractor IA
4	Is	-	R	H	X	Issue & Documentation at Vendor Place (RUBBER PRODUCT MANUFACTURING PLACE)
						IMIR/GIIR at Yard
5	W	W	-	H	X	Verification of items as per IRN at Yard: Inspection of Rubber product shall be carried out with rubber product Test Certificate compling to Clause no. 1.5.0 & sub clauses of spec, 6001F and as per recommendation of ASTM D2000.
6	Is	R	-	H	X	Issue & Documentation on the basis of IRN

LEGENDS & NOTES : Expalined seperatetely

FORMAT No.	Ref. PROCEDURE No.	ISSUE No.	REV. No.	REV. DATE:
ODS/SOF/004A	ODS/SOP/023	02	00	08.03.2016

ओएनजीसी ONGC	Offshore Design Section Engineering Services ISO – 9001:2008	INSPECTION REQUIREMENT TABLE		IRT No.	ODS/STR/IRT/09A
				Rev. No.	1
				Discipline	STRUCTURE

ITEM : RUBBER PRODUCT - 1. Grout Seal, 2. Diaphragm Closure — **INSPECTION CATEGORY : C**

Activity	1. Inspection by ONGC / Certification Agency.(CA)	2. Inspection by ONGC / Third Party Inspection(TPI)	3.Inspection by EPC / EPC's Inspection Agency (IA)	4. Inspection by Vendor/ Sub Vendor (MILL)	5. Certificates/compliance/Data/Information to be submitted by vendor for Review/ Approval	6.Stage of Inspection Involved
						General & documents- For Review/Approval /Information
1	A	-	R	H	X	Inspection & Test Plan.
2	R	-	R	H	X	Rubber product Manufacturing Procedures shall comply to ASTM D2000 and ONGC Spec 6001F Clause No. 1.5.0 & all relevant sub Clauses.
						Inspection & Testing- For Witness/ Random Witness
3	-		W	H	X	Inspection of Rubber product shall comply to Clause no. 1.5.0 & sub clauses of spec, 6001F and as per recommendation of ASTM D2000.
						IRN For issue by CA/TPI/Contractor IA
4	-	-	Is	H	X	Issue & Documentation at Vendor Place (RUBBER PRODUCT MANUFACTURING PLACE)
						IMIR/GIIR at Yard
5	W	W	-	H	X	Verification of items as per IRN at Yard: Inspection of Rubber product shall be carried out with rubber product Test Certificate compling to Clause no. 1.5.0 & sub clauses of spec, 6001F and as per recommendation of ASTM D2000.
6	Is	R	-	H	X	Issue & Documentation on the basis of IRN

LEGENDS & NOTES : Expalined seperatetely

ओएनजीसी ONGC	Offshore Design Section Engineering Services ISO – 9001:2008	INSPECTION REQUIREMENT TABLE		IRT No.	ODS/STR/IRT/10
				Rev. No.	1
				Discipline	STRUCTURE

ITEM : ARCHITECTURAL MATERIAL (SPEC. 6011) - 14 Numbers as per List below — **INSPECTION CATEGORY : C**

Activity	1. Inspection by ONGC / Certification Agency.(CA)	2. Inspection by ONGC / Third Party Inspection(TPI)	3.Inspection by EPC / EPC's Inspection Agency (IA)	4. Inspection by Vendor/ Sub Vendor	5. Certificates/compliance/Data/Information to be submitted by vendor for Review/ Approval	6.Stage of Inspection Involved
						General & documents- For Review/Approval /Information
1	A	RW	W	H	X	Inspection & Test Plan. Verification of sample of material in the yard as per approved PS.
2	R	-	R	H	X	Manufacturing Procedures- Architectural Material Manufacturing shall comply to the Specification 6011 and Architectural Design Criteria Sec. 3.10. With Certification of Fire rating of respective Architectural Item.
						Inspection & Testing- For Witness/ Random Witness
3	-	-	RW	H	H	Inspection of Archictural Items at shall be carried out along with ManufactureTest Certificate, Certificate of Fire rating (as applicable) and all Welding & Dimension control Inspection Report. Refer Spec 6011, Architectural Design Criteria Sec 3.10 and Approved PS.
						IRN For issue by CA/TPI/Contractor IA
4	-	-	Is	H	X	Issue & Documentation at Vendor Place
						IMIR/GIIR at Yard
5	W	W	-	H	X	Verification of items as per IRN & Reports Inspection of Archictural Items at Fabrication Yard shall be carried out along with ManufactureTest Certificate, Certificate of Fire rating (as applicable) and all Welding & Dimension control Inspection Report. Refer Spec 6011, Architectural Design Criteria Sec 3.10 and Approved PS.
6	Is	R	-	H	X	Issue & Documentation on the basis of IRN

LIST OF ARCHITECTURAL MATERIAL

Sl No	ITEM DESCRIPTION		Sl No.	ITEM DESCRIPTION	
1	External Fire Proofing Wall H Rated		7	Ceramic Tiles	
2	External Fire Proofing Wall A Rated		8	Raised Access (False) Floor System	
3	Internal Fire Wall A Rated & B Rated		9	A - 60 Fire Rated Door	
4	Pe-Fabricated Toilet System		10	B-15 Fire Rated Door	
5	B-15 Suspended ceiling		11	A-60 Fire Rated Window	
6	Vinyl Sheets Flooring		12	A-0 Fire Rated Door	

LEGENDS & NOTES : Expalined seperatetely

FORMAT No.	Ref. PROCEDURE No.	ISSUE No.	REV. No.	REV. DATE:
ODS/SOF/004A	ODS/SOP/023	02	00	08.03.2016

ओएनजीसी ONGC	Offshore Design Section Engineering Services ISO – 9001:2008	INSPECTION REQUIREMENT TABLE		IRT No.	ODS/STR/IRT/11
				Rev. No.	1
				Discipline	STRUCTURE
ITEM : Marine Growth Preventor				INSPECTION CATEGORY : BULK	

Activity	1. Inspection by ONGC / Certification Agency.(CA)	2. Inspection by ONGC / Third Party Inspection(TPI)	3.Inspection by EPC / EPC's Inspection Agency (IA)	4. Inspection by Vendor/ Sub Vendor (MILL)	5. Certificates/compliance/Data/Information to be submitted by vendor for Review/ Approval	6.Stage of Inspection Involved
						General & documents- For Review/Approval /Information
1	A	-	R	H	X	Inspection & Test Plan.
2	R	-	R	H	X	Manufacturing Procedures as per ONGC Spec 6001F
						Inspection & Testing- For Witness/ Random Witness
3	-	-	W	H	X	Inspection & testing as per recommendation of ASTM D2000 & as per FS 6001F.
						IRN For issue by CA/TPI/Contractor IA
4	-	-	Is	H	X	Issue & Documentation at Vendor Place (PRODUCT MANUFACTURING PLACE)
						IMIR/GIIR at Yard
5	W	W	-	H	X	Verification of items as per IRN at Yard:
6	Is	R	-	H	X	Issue & Documentation on the basis of IRN

LEGENDS & NOTES : Expalined seperatetely

FORMAT No.	Ref. PROCEDURE No.	ISSUE No.	REV. No.	REV. DATE:
ODS/SOF/004A	ODS/SOP/023	02	00	08.03.2016

ओएनजीसी ONGC	Offshore Design Section Engineering Services ISO – 9001:2008	INSPECTION REQUIREMENT TABLE			IRT No.	ODS/STR/IRT/12
					Rev. No.	1
					Discipline	STRUCTURE
ITEM : MARINE PAINT (PROTECTIVE COATING)					INSPECTION CATEGORY :BULK	

Activity	1. Inspection by ONGC / Certification Agency.(CA)	2. Inspection by ONGC / Third Party Inspection(TPI)	3.Inspection by EPC / EPC's Inspection Agency (IA)	4. Inspection by Vendor/ Sub Vendor (Paint Manufactorer's Inspector)	5. Certificates/compliance/Data/Information to be submitted by vendor for Review/ Approval	6.Stage of Inspection Involved
						General & documents- For Review/Approval /Information
1	A	W at fabrication yard	W at fabrication yard	H	X	Inspection & Test Plan.Approval sample Coating panels
2	A		A	A	X	Paint application & Inspection Procedure: Contractor shall prepare Painting / Coating application & Inspection Procudure based on Spec 2005 and submit Company Approval.
						Inspection & testing
3				W	-	Inspection & testing shall be carried out based on Spec 2005
4				Rw	-	Inspection of salt content test
5				Rw	-	Inspection of wet coating thickness
6				Rw	-	Inspection of final coating thickness
7				Rw	-	Inspection of Coating holiday Test
						IRN For issue by CA/TPI/Contractor IA/Vender's QA
8	-	-	-	Is	X	Issue & Documentation at Vendor Place (MILL)
						IMIR/GIIR at Yard
9	Rw	Rw	-	H	X	Verification of items as per IRN at Yard, batch no. Expiry , condtion of packing , storage condition etc.
10	Is	R	-	H	X	Issue of IMIR/GIIR & Documentation on the basis of IRN

LEGENDS & NOTES : Expalined seperatetely

FORMAT No.	Ref. PROCEDURE No.	ISSUE No.	REV. No.	REV. DATE:
ODS/SOF/004A	ODS/SOP/023	02	00	08.03.2016

ओएनजीसी ONGC	Offshore Design Section Engineering Services ISO – 9001:2008	INSPECTION REQUIREMENT TABLE		IRT No.	ODS/STR/IRT/12A
				Rev. No.	2
				Discipline	STRUCTURE

ITEM : MAINTENANCE MARINE PAINT (PROTECTIVE COATING) — **INSPECTION CATEGORY :BULK**

Activity	1. Inspection by ONGC / Certification Agency.(CA)	2. Third Party Inspection(TPI)	3.Inspection by EPC / EPC's Inspection Agency (IA)	4. Inspection by Vendor/ Sub Vendor (Paint Manufactorer's Inspector)	5. Certificates/compliance/Data/Information to be submitted by vendor for Review/ Approval	6.Stage of Inspection Involved
						General & documents- For Review/Approval /Information
1	A & W at offshore		W at offshore platform	H	X	Inspection & Test Plan.Approval sample Coating panels including salt test
2	A		A	A	X	Paint application & Inspection Procedure: Contractor shall prepare Painting / Coating application & Inspection Procudure based on Spec 2005 and submit Company Approval.
						Inspection & testing
3				W	-	Inspection & testing shall be carried out based on Spec 2005
4				Rw	-	Inspection of salt content test
5				Rw	-	Inspection of wet coating thickness
6				Rw	-	Inspection of final coating thickness
7				Rw	-	Inspection of Coating holiday Test
						IRN For issue by CA/TPI/Contractor IA/Vender's QA
8	-	-	-	Is	X	Issue & Documentation at Vendor Place (MILL)
						IMIR/GIIR at Offshore
9	Rw		-	H	X	Verification of items as per IRN at Offshore, batch no. Expiry , condtion of packing , storage condition etc.
10	Is		-	H	X	Issue of IMIR/GIIR & Documentation on the basis of IRN

LEGENDS & NOTES : Expalined seperatetely

FORMAT No.	Ref. PROCEDURE No.	ISSUE No.	REV. No.	REV. DATE:
ODS/SOF/004A	ODS/SOP/023	02	00	08.03.2016

Note 1: The painting Inspector shall have minimum
" SSPC's (Steel Structure Painting Council) Certification Course on Paint Coating Inspection and Quality control Level 1"
OR
" NACE's Coating Inspector Certification (CIP) Level 1" .

Note 2: This procedure and qualification test has to be approved by Level 2 or 3 of SSPC Certificate Course or NACE (CIP)

	Offshore Design Section **Engineering Services** **ISO – 9001:2008**	**INSPECTION REQUIREMENT TABLE**	**IRT No.**	-
			Rev. No.	**0**
			Discipline	**PIPELINE**
			Page: *1 OF 1*	

INDEX

S. No	**ITEM**	**IRT NO.**	**INSP. CATEGORY**
1.	CARBON STEEL SEAMLESS LINE PIPES (SOUR SERVICE)	ODS/PIPELINE/IRT/01	A
2.	CARBON STEEL SEAMLESS LINE PIPES (NON-SOUR SERVICE)	ODS/PIPELINE/IRT/02	A
3.	LSAW LINE PIPES (SOUR SERVICE)	ODS/PIPELINE/IRT/03	A
4.	LSAW LINE PIPES (NON- SOUR SERVICE)	ODS/PIPELINE/IRT/04	A
5.	CRA CLAD LINE PIPES (SOUR SERVICE)	ODS/PIPELINE/IRT/05	A
6.	LONG RADIUS BENDS	ODS/PIPELINE/IRT/06	B
7.	CRA CLAD LONG RADIUS BENDS (SOUR SERVICE)	ODS/PIPELINE/IRT/07	B
8.	ANTI CORROSION COATING , CWC COATING , ANODE INSTALLATION & MONEL SHEATHING	ODS/PIPELINE/IRT/08	A
9.	INTERNAL ANTI-CORROSION COATING	ODS/PIPELINE/IRT/09	A
10.	INSULATION COATING	ODS/PIPELINE/IRT/10	A
11.	NICKEL COPPER ALLOY UNS N04400 (MONEL) PLATES AND ASSOCIATE ITEMS	ODS/PIPELINE/IRT/11	C
12.	FLEXIBLE PIPES	ODS/PIPELINE/IRT/12	A
13.	SUB-SEA BALL VALVE (SOUR SERVICE)	ODS/PIPELINE/IRT/13	B
14.	SUB-SEA BALL VALVE (NON-SOUR SERVICE)	ODS/PIPELINE/IRT/14	B
15.	SUB-SEA FLANGES (SOUR SERVICE)	ODS/PIPELINE/IRT/15	B
16.	SUB-SEA FLANGES (NON-SOUR SERVICE)	ODS/PIPELINE/IRT/16	B
17.	SUB-SEA FLOW TEE (SOUR SERVICE)	ODS/PIPELINE/IRT/17	B
18.	SUB-SEA FLOW TEE (NON-SOUR SERVICE)	ODS/PIPELINE/IRT/18	B
19.	SUB-SEA PIGGABLE WYE (SOUR SERVICE)	ODS/PIPELINE/IRT/19	A
20.	SUB-SEA PIGGABLE WYE (NON-SOUR SERVICE)	ODS/PIPELINE/IRT/20	A

	Offshore Design Section Engineering Services ISO – 9001:2008	INSPECTION REQUIREMENT TABLE	IRT No.	-
			Rev. No.	0
			Discipline	PIPELINE
			Page: *1 OF 1*	

INSPECTION REQUIREMENT TABLE

OIL AND NATURAL GAS CORPORATION LTD. INDIA

AVIN ASHOK EE(C)	R.P. PUROHIT CE(C&M)	ROHIT PANT DGM(M)	SANJAY NARAIN DGM(C&M)
RAJKAMAL GUPTA DGM(C&M)	BALMIKI SINGH DGM(C&M)	BRAHMPAL MALIK DGM(C&M)	K.P.VARGHESE DGM(C&M)
PREPARED BY			
A.K.MISHRA DGM (C&M)		D.R.KAMBLE GM (C&M)	
REVIEWED BY		APPROVED BY	
As per Index	18.04.2016	0	
TOTAL NO. of IRTs	DATE	REV.NO.	

	Offshore Design Section **Engineering Services** **ISO – 9001:2008**	**INSPECTION REQUIREMENT TABLE**	**IRT No.**	**ODS/PIPELINE/IRT/01**
			Rev. No.	**0**
			Discipline	**PIPELINE**
			Page: *1 OF 1*	

Item: CARBON STEEL SEAMLESS LINE PIPES (SOUR SERVICE)					**INSPECTION CATEGORY: A**
ONGC FUNCTIONAL SPEC: 2020B					
Activity No	1. Inspection by ONGC or ONGC Appointed Certification Agency (CA)				
		2. Inspection by LSTK contractor's inspection agency (TPI)			
			3. Inspection by Vendor/ Sub-vendor		
				4. Certificates/ Data to be submitted by Vendor	
					Stages of Inspection
					GENERAL & DOCUMENTS -FOR REVIEW /APPROVAL/INFORMATION
1	A	R	H	X	QUALITY PLAN
2	A	R	H	X	MANUFACTURING PROCEDURE SPECIFICATION
3	A	R	H	X	INSPECTION TESTING PLAN
4	R	R	H	X	TESTS / INSPECTION REPORTS BY VENDOR
5	R	R	H	X	STARTING MATERIAL TEST CERTIFICATES / COMPLIANCE CERTIFICATES
6	R	R	H	X	CALIBRATION CERTIFICATES / REPORTS OF TESTING EQUIPMENTS/NDT TECHNICIAN QUALIFICATION CERTIFICATES IN LINE WITH API 5L REQUIREMENT
7	R	H	H	X	FINAL DOCUMENTATION , MILL QUALIFICATION TEST REPORTS, FDPT, MILL PRODUCTION REPORTS
8	R	R	H	X	PIPE MANUFACTURING DATA BOOK AS PER CL. 10.1.3.2
					INSPECTION AND TESTING- FOR WITNESS/ RANDOM WITNESS
9	RW	W	H	X	STARTING MATERIAL IDENTIFICATION
10	RW	W	H	X	CALIBRATION OF EQUIPMENTS/ INSTRUMENTS
11	W	W	H	X	MILL QUALIFICATION TEST CERTIFICATION
12	RW	W	H	X	FIRST DAY PRODUCTION SAMPLING AND TESTING FOR MECHANICAL, CHEMICAL & CORROSION TESTS
13	RW	RW	H	X	INPROCESS PARAMETER CHECK, HEAT TREATMENT, STEEL MAKING PROCESS CHECK, BILLET HEAT NUMBER VERIFICATION
14	RW	W	H	X	PRODUCTION TEST SAMPLING AND TESTING FOR MECHANICAL, CHEMICAL, CORROSION & SUPPLEMENTARY TESTS
15	RW	W	H	X	PIPE END/ BEVEL & HYDROTESTING CHECK
16	RW	W	H	X	ALL DESTRUCTIVE AND NDT AS PER STANDARD & SUPPLEMENTARY REQUIREMENTS AS PER THE SPEC WITH ADDENDUM
17	RW	RW	H	X	PIPE END DEMAGNETISING
18	RW	W	H	X	FINAL DIMENSIONAL, VISUAL CHECK, WEIGHT CHECK, MARKING, DIE STAMPING AND BEVEL PROTECTORS ETC.
					IRN FOR ISSUE BY CA/TPI/CONTRACTOR IA
19	Is	R	-	-	ISSUE OF INSPECTION RELEASE NOTE AT VENDOR'S PLACE
					**** OTHER REQUIREMENT****
20	RW	RW	H	X	CHECK PREPARATION FOR SHIPMENT

The Activities listed above are not exhaustive. Inspection of other activities shall be carried out as per requirement of the FS.

Legend & Notes : Explained Separately.

	Offshore Design Section **Engineering Services** **ISO – 9001:2008**	**INSPECTION REQUIREMENT TABLE**	**IRT No.**	**ODS/PIPELINE/IRT/02**
			Rev. No.	**0**
			Discipline	**PIPELINE**
			Page: *1 OF 1*	

Item: CARBON STEEL SEAMLESS LINE PIPES (NON-SOUR SERVICE)					**INSPECTION CATEGORY: A**
ONGC FUNCTIONAL SPEC: 2020A					
Activity No	1. Inspection by ONGC or ONGC Appointed Certification Agency (CA)	2. Inspection by LSTK contractor's inspection agency (TPI)	3. Inspection by Vendor/ Sub-vendor	4. Certificates/ Data to be submitted by Vendor	Stages of Inspection
					GENERAL & DOCUMENTS -FOR REVIEW /APPROVAL/INFORMATION
1	A	R	H	X	QUALITY PLAN
2	A	R	H	X	MANUFACTURING PROCEDURE SPECIFICATION
3	A	R	H	X	INSPECTION TESTING PLAN
4	R	R	H	X	TESTS / INSPECTION REPORTS BY VENDOR
5	R	R	H	X	MATERIAL TEST CERTIFICATES / COMPLIANCE CERTIFICATES
6	R	R	H	X	CALIBRATION CERTIFICATES / REPORTS OF TESTING EQUIPMENTS/NDT TECHNICIAN QUALIFICATION CERTIFICATES
7	R	H	H	X	FINAL DOCUMENTATION, FDPT, MILL PRODUCTION REPORTS
8	R	R	H	X	PIPE MANUFACTURING DATA BOOK
					INSPECTION AND TESTING- FOR WITNESS/ RANDOM WITNESS
9	RW	W	H	X	MATERIAL IDENTIFICATION
10	RW	W	H	X	CALIBRATION OF EQUIPMENTS/ INSTRUMENTS
11	RW	W	H	X	FIRST DAY PRODUCTION SAMPLING AND TESTING FOR MECHANICAL & CHEMICAL TESTS
12	RW	RW	H	X	INPROCESS PARAMETER CHECK, HEAT TREATMENT, STEEL MAKING PROCESS CHECK, BILLET HEAT NUMBER VERIFICATION
13	RW	W	H	X	PRODUCTION TEST SAMPLING AND TESTING FOR MECHANICAL, CHEMICAL & SUPPLEMENTARY TESTS
14	RW	W	H	X	PIPE END/ BEVEL & HYDROTESTING CHECK
15	RW	W	H	X	ALL DESTRUCTIVE AND NDT AS PER STANDARD & SUPPLEMENTARY REQUIREMENTS AS PER SPEC.
16	RW	RW	H	X	PIPE END DEMAGNETISING
17	RW	W	H	X	FINAL DIMENSIONAL, VISUAL CHECK, WEIGHT CHECK, MARKING, DIE STAMPING AND BEVEL PROTECTORS ETC.
					IRN FOR ISSUE BY CA/TPI/CONTRACTOR IA
18	Is	R	-	-	ISSUE OF INSPECTION RELEASE NOTE AT VENDOR'S PLACE
					**** OTHER REQUIREMENT****
19	RW	RW	H	X	CHECK PREPARATION FOR SHIPMENT

The Activities listed above are not exhaustive. Inspection of other activities shall be carried out as per requirement of the FS.
Legend & Notes : Explained Separately.

	Offshore Design Section **Engineering Services** **ISO – 9001:2008**	**INSPECTION REQUIREMENT TABLE**	**IRT No.**	**ODS/PIPELINE/IRT/ 03**
			Rev. No.	**0**
			Discipline	**PIPELINE**
			Page: *1 OF 1*	

Item:	**LONGITUDINAL SEAM SUBMERGED ARC WELDED LINEPIPE FOR SUBMARINE PIPELINES (SOUR SERVICE)**				**INSPECTION CATEGORY: A**
ONGC FUNCTIONAL SPEC: 2020D					
Activity No	1. Inspection by ONGC or ONGC Appointed Certification Agency (CA)				
		2. Inspection by LSTK contractor's inspection agency (TPI)			
			3. Inspection by Vendor/ Sub-vendor		
				4. Certificates/ Data to be submitted by Vendor	
					Stages of Inspection
					GENERAL & DOCUMENTS -FOR REVIEW /APPROVAL/INFORMATION
1	A	R	H	X	QUALITY PLAN
2	A	R	H	X	MANUFACTURING PROCEDURE SPECIFICATION
3	A	R	H	X	INSPECTION TESTING PLAN
4	R	R	H	X	TESTS / INSPECTION REPORTS BY VENDOR
5	R	R	H	X	MATERIAL TEST CERTIFICATES / COMPLIANCE CERTIFICATES
6	R	R	H	X	CALIBRATION CERTIFICATES / REPORTS OF TESTING EQUIPMENTS/NDT TECHNICIAN QUALIFICATION CERTIFICATES
7	R	R	H	X	WPS/PQR AND WPQ'S
8	R	H	H	X	FINAL DOCUMENTATION , MILL QUALIFICATION TEST REPORTS, FDPT, MILL PRODUCTION REPORTS
9	R	R	H	X	PIPE MANUFACTURING DATA BOOK
					INSPECTION AND TESTING- FOR WITNESS/ RANDOM WITNESS
10	RW	W	H	X	MATERIAL IDENTIFICATION
11	RW	W	H	X	CALIBRATION OF EQUIPMENTS/ INSTRUMENTS
12	W	W	H	X	MILL QUALIFICATION TEST CERTIFICATION
13	RW	W	H	X	FIRST DAY PRODUCTION SAMPLING AND TESTING FOR MECHANICAL, CHEMICAL & CORROSION TESTS
14	RW	W	H	X	PRODUCTION TEST SAMPLING AND TESTING FOR MECHANICAL, CHEMICAL, CORROSION & SUPPLEMENTARY TESTS
15	RW	W	H	X	PIPE END/ BEVEL & HYDROTESTING CHECK
16	RW	W	H	X	ALL DESTRUCTIVE AND NDT AS PER STANDARD & SUPPLEMENTARY REQUIREMENTS AS PER SPEC WITH ADDENDUM
17	RW	RW	H	X	PIPE END DEMAGNETISING
18	RW	W	H	X	FINAL DIMENSIONAL, VISUAL CHECK, WEIGHT CHECK, MARKING, DIE STAMPING AND BEVEL PROTECTORS ETC.
					IRN FOR ISSUE BY CA/TPI/CONTRACTOR IA
19	Is	R	-	-	ISSUE OF INSPECTION RELEASE NOTE AT VENDOR'S PLACE
					**** OTHER REQUIREMENT****
20	RW	RW	H	X	CHECK PREPARATION FOR SHIPMENT

The Activities listed above are not exhaustive. Inspection of other activities shall be carried out as per requirement of the FS.

Legend & Notes : Explained Separately.

	Offshore Design Section **Engineering Services** **ISO – 9001:2008**	**INSPECTION REQUIREMENT TABLE**	**IRT No.**	**ODS/PIPELINE/IRT/04**
			Rev. No.	**0**
			Discipline	**PIPELINE**
			Page: *1 OF 1*	

Item:	**LONGITUDINAL SEAM SUBMERGED ARC WELDED LINEPIPE FOR SUBMARINE PIPELINES (NON-SOUR SERVICE)**				**INSPECTION CATEGORY: A**
ONGC FUNCTIONAL SPEC: 2020C					
Activity No	1. Inspection by ONGC or ONGC Appointed Certification Agency (CA)				
		2. Inspection by LSTK contractor's inspection agency (TPI)			
			3. Inspection by Vendor/ Sub-vendor		
				4. Certificates/ Data to be submitted by Vendor	
					Stages of Inspection
					GENERAL & DOCUMENTS -FOR REVIEW /APPROVAL/INFORMATION
1	A	R	H	X	QUALITY PLAN
2	A	R	H	X	MANUFACTURING PROCEDURE SPECIFICATION
3	A	R	H	X	INSPECTION TESTING PLAN
4	R	R	H	X	TESTS / INSPECTION REPORTS BY VENDOR
5	R	R	H	X	MATERIAL TEST CERTIFICATES / COMPLIANCE CERTIFICATES
6	R	R	H	X	CALIBRATION CERTIFICATES / REPORTS OF TESTING EQUIPMENTS/NDT TECHNICIAN QUALIFICATION CERTIFICATES
7	R	R	H	X	WPS/PQR AND WPQ'S
8	R	H	H	X	FINAL DOCUMENTATION , FDPT, MILL PRODUCTION REPORTS
9	R	R	H	X	PIPE MANUFACTURING DATA BOOK
					INSPECTION AND TESTING- FOR WITNESS/ RANDOM WITNESS
10	RW	W	H	X	MATERIAL IDENTIFICATION
11	RW	W	H	X	CALIBRATION OF EQUIPMENTS/ INSTRUMENTS
12	RW	W	H	X	FIRST DAY PRODUCTION SAMPLING AND TESTING FOR MECHANICAL & CHEMICAL TESTS
13	RW	W	H	X	PRODUCTION TEST SAMPLING AND TESTING FOR MECHANICAL, CHEMICAL & SUPPLEMENTARY TESTS
14	RW	W	H	X	PIPE END/ BEVEL & HYDROTESTING CHECK
15	RW	W	H	X	ALL DESTRUCTIVE AND NDT AS PER STANDARD & SUPPLEMENTARY REQUIREMENTS AS PER SPEC WITH ADDENDUM
16	RW	RW	H	X	PIPE END DEMAGNETISING
17	RW	W	H	X	FINAL DIMENSIONAL, VISUAL CHECK, WEIGHT CHECK, MARKING, DIE STAMPING AND BEVEL PROTECTORS ETC.
					IRN FOR ISSUE BY CA/TPI/CONTRACTOR IA
18	Is	R	-	-	ISSUE OF INSPECTION RELEASE NOTE AT VENDOR'S PLACE
					**** OTHER REQUIREMENT****
19	RW	RW	H	X	CHECK PREPARATION FOR SHIPMENT

The Activities listed above are not exhaustive. Inspection of other activities shall be carried out as per requirement of the FS.

Legend & Notes : Explained Separately.

	Offshore Design Section Engineering Services ISO – 9001:2008	**INSPECTION REQUIREMENT TABLE**	**IRT No.**	**ODS/PIPELINE/IRT/05**
			Rev. No.	**0**
			Discipline	**PIPELINE**
			Page: *1 OF 1*	

Item: CRA CLAD LINEPIPES (SOUR SERVICE)					**INSPECTION CATEGORY: A**
ONGC FUNCTIONAL SPEC: 2020F & 2020D					
Activity No	1. Inspection by ONGC or ONGC Appointed Certification Agency (CA)	2. Inspection by LSTK contractor's inspection agency (TPI)	3. Inspection by Vendor/ Sub-vendor	4. Certificates/ Data to be submitted by Vendor	Stages of Inspection
					GENERAL & DOCUMENTS -FOR REVIEW /APPROVAL/INFORMATION
1	A	R	H	X	INSPECTION AND TEST PLAN
2	A	R	H	X	SUBMISSION OF MANUFACTURING PROCEDURE SPECIFICATION (MPS)
3	R	R	H	X	SUBMISSION OF CRA CLADDING PROCESS, HEAT TREATMENT
4	R	R	H	X	UT FOR BOND INTEGRITY AND LAMINATION CHECK AND OTHER NDT PROCEDURES (FOR PLATES AND FINISHED PIPES), WELDING IN LINE WITH ONGC SPEC.2020 F AND ACCEPTANCE CRITERIA
5	R	R	H	X	SUBMISSION OF NDT TECHNICIAN CERTIFICATES/ QUALIFICATION RECORDS
6	R	W	H	X	WPS/PQR AND WPQS
7	R	R	H	X	VERIFICATION OF HEAT TREATMENT RECORDS/CHARTS (AS APPLICABLE)
8	R	R	H	X	CRA CLAD MANUFACTURING DATA BOOK, MANUFACTURER'S TEST CERTIFICATES IN COMPLIANCE TO THE ONGC SPECIFICATIONS AND NACE MR 01 75/ ISO 15156 FOR CRA CLAD NACE LINE PIPES.
					INSPECTION AND TESTING- FOR WITNESS/ RANDOM WITNESS
9	RW	W	H	X	IDENTIFICATION OF CRA CLAD PLATES / RAW MATERIAL AND VERIFICATION OF TRACEABILITY RECORDS
10	RW	W	H	X	CHEMICAL ANALYSIS, CORROSION TEST AND MECHANICAL TESTS INLINE WITH ONGC'S SPECIFICATION 2020F,2020D (FOR BASE MATERIAL)AND APPLICABLE STANDARDS
11	RW	W	H	X	NDE (RT/UT/MPI/DPT – AS PER ONGC SPEC)
12	RW	W	H	X	VISUAL, DIMENSIONAL, WALL THICKNESS, OVALITY AND STRAIGHTNESS CHECK, BEVEL CHECK AND HARD STAMPING
13	RW	W	H	X	HYDROSTATIC PRESSURE TEST
14	RW	RW	H	X	MARKING , HARD STAMPING ON PIPE BEVEL, MATERIAL FOR IDENTIFICATION/ TRACEABILITY
					IRN FOR ISSUE BY CA/TPI/CONTRACTOR IA
15	Is	R	-	-	ISSUE OF INSPECTION RELEASE NOTE AT VENDOR'S PLACE
					**** OTHER REQUIREMENT****
16	RW	RW	H	X	CHECK PREPARATION FOR SHIPMENT

The Activities listed above are not exhaustive. Inspection of other activities shall be carried out as per requirement of the FS.
Legend & Notes : Explained Separately.

	Offshore Design Section **Engineering Services** **ISO – 9001:2008**	**INSPECTION REQUIREMENT TABLE**	**IRT No.**	**ODS/PIPELINE/IRT/06**
			Rev. No.	**0**
			Discipline	**PIPELINE**
			Page: *1 OF 1*	

Item: LONG RADIUS BENDS					**INSPECTION CATEGORY: B**
ONGC FUNCTIONAL SPEC: 2018					
Activity No	1. Inspection by ONGC or ONGC Appointed Certification Agency (CA)	2. Inspection by LSTK contractor's inspection agency (TPI)	3. Inspection by Vendor/ Sub-vendor	4. Certificates/ Data to be submitted by Vendor	Stages of Inspection
					GENERAL & DOCUMENTS -FOR REVIEW /APPROVAL/INFORMATION
1	A	R	H	X	INSPECTION AND TEST PLAN
2	A	R	H	X	INSPECTION TESTING AND MANUFACTURING PROCEDURE
3	R	R	H	X	TESTS / INSPECTION REPORTS BY VENDOR
4	R	R	H	X	PIPE LONG RADIUS BENDS VENDOR DOSSIER, MATERIAL TEST CERTIFICATES / COMPLIANCE CERTIFICATES
5	R	R	H	X	CALIBRATION CERTIFICATES/ REPORTS OF TESTING EQUIPMENTS
6	R	H	H	X	FINAL DOCUMENTATION
					INSPECTION AND TESTING- FOR WITNESS/ RANDOM WITNESS
7	RW	W	H	X	MATERIAL IDENTIFICATION AND VERIFICATION OF TRACEABILITY RECORDS
8	W	W	H	X	MANUFACTURING PROCEDURE QUALIFICATION TEST ALONG WITH MECHANICAL,CHEMICAL AND CORROSION TESTING
9	W	W	H	X	FINAL VISUAL AND DIMENSIONAL & TOLERANCE CHECK,BEND ANGLE,BEND RADIUS,OVALITY,WALL THICKNESS,OFF-PLANE, BEVEL CHECK AND ALL OTHER TESTS AS PER SPEC 2018 REV0
10	W	W	H	X	RUNNING OF GAUGING PIG CHECK
11	W	W	H	X	NDE REQUIREMENT (RT/UT/MPI/DPT-AS AS PER ONGC SPEC)
12	W	W	H	X	HYDROSTATIC PRESSURE TEST
13	W	H	H	X	VERIFICATION OF MARKING
					IRN FOR ISSUE BY CA/TPI/CONTRACTOR IA
14	Is	R	-	-	ISSUE OF INSPECTION RELEASE NOTE AT VENDOR'S PLACE
					**** OTHER REQUIREMENT****
15	RW	RW	H	X	CHECK PREPARATION FOR SHIPMENT

The Activities listed above are not exhaustive. Inspection of other activities shall be carried out as per requirement of the FS.
Legend & Notes : Explained Separately.

	Offshore Design Section **Engineering Services** **ISO – 9001:2008**	**INSPECTION REQUIREMENT TABLE**	**IRT No.**	**ODS/PIPELINE/IRT/07**
			Rev. No.	**0**
			Discipline	**PIPELINE**
			Page: *1 OF 1*	

Item: CRA CLAD LONG RADIUS BENDS (SOUR SERVICE)					**INSPECTION CATEGORY: B**
ONGC FUNCTIONAL SPEC: 2018 A					
Activity No	1. Inspection by ONGC or ONGC Appointed Certification Agency (CA)				
		2. Inspection by LSTK contractor's inspection agency (TPI)			
			3. Inspection by Vendor/ Sub-vendor		
				4. Certificates/ Data to be submitted by Vendor	
					Stages of Inspection
					GENERAL & DOCUMENTS -FOR REVIEW /APPROVAL/INFORMATION
1	A	R	H	X	INSPECTION AND TEST PLAN
2	A	R	H	X	SUBMISSION OF PROCEDURE FOR HEAT TREATMENT (IF REQUIRED), UT FOR BOND INTEGRITY CHECK PROCEDURES IN LINE WITH ONGC SPEC
3	A	R	H	X	SUBMISSION OF CRA CLAD BENDS MANUFACTURING PROCEDURE.
4	R	R	H	X	SUBMISSION OF NDT TECHNICIANS CERTIFICATES/ QUALIFICATION PROCEDURES
5	R	R	H	X	MANUFACTURER'S TEST CERTIFICATES IN COMPLIANCE TO APPLICABLE ONGC SPECIFICATION AND NACE MR 01 75/ ISO 15156 FOR NACE LINE PIPES.
6	R	R	H	X	CRA CLAD BEND MANUFACTURING DATA BOOK
7	R	H	H	X	FINAL DOCUMENTATION
					INSPECTION AND TESTING- FOR WITNESS/ RANDOM WITNESS
8	RW	W	H	X	MATERIAL IDENTIFICATION AND VERIFICATION OF TRACEABILITY RECORDS
9	W	W	H	X	MANUFACTURING PROCEDURE QUALIFICATION TEST ALONG WITH MECHANICAL,CHEMICAL AND CORROSION TESTING
10	RW	W	H	X	FINAL VISUAL AND DIMENSIONAL & TOLERANCE CHECK,BEND ANGLE,BEND RADIUS,OVALITY,WALL THICKNESS,OFF-PLANE AND ALL OTHER TESTS AS PER SPEC 2018A REV0
11	W	W	H	X	RUNNING OF GAUGING PIG CHECK
12	W	W	H	X	NDE REQUIREMENTS (RT/UT/MPI/DPT – AS PER ONGC SPEC)
13	W	W	H	X	HYDROSTATIC PRESSURE TEST
14	R	H	H	X	VERIFICATION OF MARKING
					IRN FOR ISSUE BY CA/TPI/CONTRACTOR IA
15	Is	R	-	-	ISSUE OF INSPECTION RELEASE NOTE AT VENDOR'S PLACE
					**** OTHER REQUIREMENT****
16	RW	RW	H	X	CHECK PREPARATION FOR SHIPMENT

The Activities listed above are not exhaustive. Inspection of other activities shall be carried out as per requirement of the FS.
Legend & Notes : Explained Separately.

	Offshore Design Section **Engineering Services** **ISO – 9001:2008**	**INSPECTION REQUIREMENT TABLE**	**IRT No.**	**ODS/PIPELINE/IRT/08**
			Rev. No.	**0**
			Discipline	**PIPELINE**
			Page: *1 OF 3*	

Item: ANTI-CORROSION COATING (3 LAYER POLYPROPYLENE), CONCRETE WEIGHT COATING, AND ANODE INSTALLATION	**INSPECTION CATEGORY: A**
ONGC FUNCTIONAL SPEC: 2012A, 2013, 4002 AND 2015	

Activity No	1. Inspection by ONGC or ONGC Appointed Certification Agency (CA)	2. Inspection by ONGC Appointed Third Party Inspection Agency (TPI)	3. Inspection by Contractor or Contractor appointed Third Party Inspection Agency	4. Inspection by Vendor / Sub Vendor	5. Certificate / Data to be submitted by Vendor for Review / Approval	STAGES OF INSPECTION
GENERAL & DOCUMENTS -FOR REVIEW /APPROVAL/INFORMATION						
1.	A	R	R	H	X	INSPECTION AND TEST PLAN (COVERING ALL STAGES OF RAW MATERIALS)
2.	A	R	R	H	X	PRE-QUALIFICATION TEST PROCEDURE OF ANTI-CORROSION COATING, CONCRETE WEIGHT COATING & ANODE INSTALLATION
3.	R	R	R	H	X	VENDOR DOSSIER FOR AS INSTALLED INCLUDING TEST CERTIFICATES OF ANTI CORROSION COATING, CONCRETE COATING, ANODE INSTALLATION & MONEL SHEATHING
4.	R	R	H	H	X	FINAL DOCUMENTATION
INSPECTION AND TESTING- FOR WITNESS/ RANDOM WITNESS						
BARE LINE PIPE, LONG RADIUS BENDS, SUBSEA BALL VALVES, FLANGES &ALL OTHER PIPELINE ITEMS. RECEIPT AT YARD						
5.	RW	RW	RW	H	X	VISUAL INSPECTION OF PIPES, LR BENDS, SUBSEA BALL VALVES, FLANGES& ALL OTHER PIPELINE ITEMS ETC. AT YARD, VERIFICATION WITH PIPE TALLY SHEETS ALONG WITH TRANSFER OF PIPE IDENTIFICATION NOS. AND ISSUE OF IMIR/GIIR
ANODE INSTALLATION						
5.	RW	RW	RW	H	X	VISUAL INSPECTION OF ANODE.
6.	RW	RW	RW	H	X	INSTALLATION & THERMITE WELDING.
7.	RW	RW	RW	H	X	VISUAL INSPECTION OF ANODE SHARP WELDS.
8.	RW	RW	RW	H	X	MPI AN ANODE SHARP WELD.
9.	RW	RW	RW	H	X	ELECTRICAL CONTINUITY CHECK.
10.	RW	RW	RW	H	X	COAL-TAR FILL-UP IN JOINT GAPS.
ANTI-CORROSION COATING						
11.	RW	RW	RW	H	X	RAW MATERIAL IDENTIFICATION AND REVIEW OF MANUFACTURER'S TEST CERTIFICATES AS PER PROJECT SPECIFICATION ONGC SPEC 2012A
12.	RW	RW	RW	H	X	SAMPLE TESTING OF PROCURED FBE POWDER, PP & ADHESIVE.
13.	RW	RW	RW	H	X	PROCEDURE QUALIFICATION TESTING FOR 3LPP CORROSION COATING AS PER PROCEDURE AS PER APPENDIX 1 OF SPEC.2012.
14.	RW	RW	RW	H	X	CHECK SURFACE CONDITION BEFORE BLASTING, PREHEATING.
15.	RW	RW	RW	H	X	CLEANLINESS OF BLAST CLEANED SURFACE
16.	RW	RW	RW	H	X	SURFACE PROFILE CHECK.

Offshore Design Section Engineering Services ISO – 9001:2008	INSPECTION REQUIREMENT TABLE	IRT No.	ODS/PIPELINE/IRT/08
		Rev. No.	0
		Discipline	PIPELINE
		Page: *2 OF 3*	

Activity No	1. Inspection by ONGC or ONGC Appointed Certification Agency (CA)	2. Inspection by ONGC Appointed Third Party Inspection Agency (TPI)	3. Inspection by Contractor or Contractor appointed Third Party Inspection Agency	4. Inspection by Vendor / Sub Vendor	5. Certificate / Data to be submitted by Vendor for Review / Approval	STAGES OF INSPECTION
17.	RW	RW	RW	H	X	PHOSPHORIC ACID PRE-TREATMENT.
18.	RW	RW	RW	H	X	CHOLORIDE CONTENT CHECK.
19.	RW	RW	RW	H	X	CHECK PIPE SURFACE TEMPERATURE & COATING APPLICATION TEMPERATURE.
20.	RW	RW	RW	H	X	ANTI-CORROSION COATING.
21.	RW	RW	RW	H	X	VISUAL CHECK.
22.	RW	RW	RW	H	X	COATING THICKNESS CHECK.
23.	RW	W	W	H	X	HOLIDAY TESTING.
24.	W	W	W	H	X	ADHESION TESTING
25.	RW	RW	W	H	X	PENETRATION INDENTATION TEST.
26.	RW	RW	W	H	X	IMPACT TEST.
27.	RW	RW	RW	H	X	CATHODIC DISBONDING CHECK.
28.	RW	RW	RW	H	X	AIR ENTRAPMENT (POROSITY) ASSESSMENT.
29.	RW	RW	RW	H	X	DEGREE OF CURE
30.	W	W	W	H	X	DESTRUCTIVE TESTS.
31.	W	W	W	H	X	REPAIRS IF ANY.
32.	RW	RW	W	H	X	HANDLING & STORAGE OF PIPES.
33.	RW	RW	W	H	X	MARKING AND TRACEABILITY CHECK.
						CONCRETE COATING
34.	W	W	W	H	X	PROCEDURE QUALIFICATION FOR CONCRETE MIX AND APPLICATION AS PER PROJECT SPECIFICATION ONGC SPEC 2013
35.	RW	RW	RW	H	X	CHECK FOR GRADING AND PURITY OF SAND AND AGGREGATE, CHECK FOR PURITY OF WATER.
36.	RW	RW	RW	H	X	CHECK FOR REINFORCEMENT STEEL.
37.	RW	RW	RW	H	X	HOLIDAY DETECTION/MEGGERING TEST
38.	RW	RW	RW	H	X	CALIBRATION FOR WEIGHING EQUIPMENT.
39.	RW	RW	W	H	X	VISUAL, DIMENSIONAL & TOLERENCE CHECK.
40.	RW	RW	W	H	X	-SATURATED WEIGHT TEST -STRENGTH(IN 7 DAYS, 28 DAYS) AND DENSITY TEST -WATER ABSORPTION TEST
41.	W	W	W	H	X	SHEAR TEST (PUSH OFF TEST).
42.	RW	RW	RW	H	X	MEASUREMENT & LOGGING OF EACH PIPE CONCRETE COATING.
43.	RW	RW	RW	H	X	WET & DRY WEIGHING OF COATED PIPE.

	Offshore Design Section **Engineering Services** **ISO – 9001:2008**	**INSPECTION REQUIREMENT TABLE**	**IRT No.** ODS/PIPELINE/IRT/08 **Rev. No.** 0 **Discipline** PIPELINE **Page:** *3 OF 3*

Activity No	1. Inspection by ONGC or ONGC Appointed Certification Agency (CA)	2. Inspection by ONGC Appointed Third Party Inspection Agency (TPI)	3. Inspection by Contractor or Contractor appointed Third Party Inspection Agency	4. Inspection by Vendor / Sub Vendor	5. Certificate / Data to be submitted by Vendor for Review / Approval	STAGES OF INSPECTION
FABRICATION AND INSTALLATION OF NICKEL – COPPER ALLOY UNS N04400 (MONEL) PLATES AND ASSOCIATE ITEMS						
44.	A	R	R	H	X	INSPECTION AND TEST PLAN
45.	RW	W	W	H	X	MATERIAL IDENTIFICATION & MATERIAL TEST CERTIFICATES AND TRACEABILITY RECORDS AS PER CLAUSE 8.13 OF ONGC SPEC 2015 REV 1
46.	A	R	W	H	X	WPS/PQR/WPQ
47.	W	W	W	H	X	VISUAL, DIMENSIONAL CHECK , FABRICATION AND WELDING
48.	RW	RW	W	H	X	NDT
49	W	W	W	H	X	LEAK TEST
FINAL						
50.	RW	RW	RW	H	X	REPAIRS, MARKING AS PER PROJECT SPECIFICATION.
51.	RW	RW	RW	H	X	VERIFY CUT BACK OF CWC & 3LPP COATING.
52.	RW	RW	RW	H	X	CHECK FOR BEVEL END PROTECTIONS AND INTERNAL & END CLEANING.
53.	RW	RW	RW	H	X	REVIEW OF DETAILED CORELATION CHART, TALLY SHEETS AT VENDOR PLACE.
IRN FOR ISSUE BY CA/TPI/CONTRACTOR IA						
54.	Is	R	R	-		ISSUE OF INSPECTION RELEASE NOTE AT VENDOR'S PLACE

The Activities listed above are not exhaustive. Inspection of other activities shall be carried out as per requirement of the FS.

Legend & Notes : Explained Separately.

	Offshore Design Section **Engineering Services** **ISO – 9001:2008**	**INSPECTION REQUIREMENT TABLE**	**IRT No.**	**ODS/PIPELINE/IRT/09**
			Rev. No.	**0**
			Discipline	**PIPELINE**
			Page: *1 OF 1*	

Item: INTERNAL ANTI-CORROSION COATING	**Inspection Category: A**
ONGC FUNCTIONAL SPEC: TBA	

Activity No	1. Inspection by ONGC or ONGC Appointed Certification Agency (CA)	2. Inspection by ONGC Appointed Third Party Inspection Agency (TPI)	3. Inspection by Contractor or Contractor appointed Third Party Inspection Agency	4. Inspection by Vendor / Sub Vendor	5. Certificate / Data to be submitted by Vendor for Review / Approval	STAGES OF INSPECTION
						GENERAL & DOCUMENTS -FOR REVIEW /APPROVAL / INFORMATION
1.	A	R	R	H	X	INSPECTION AND TEST PLAN
2.	A	R	R	H	X	INSPECTION TESTING AND APPLICATION PROCEDURE
3.	R	R	R	H	X	TESTS / INSPECTION REPORTS BY VENDOR
4.	R	R	R	H	X	MATERIAL TEST CERTIFICATES / COMPLIANCE CERTIFICATES
5.	R	R	R	H	X	CALIBRATION CERTIFICATES / REPORTS OF TESTING EQUIPMENTS
						INSPECTION AND TESTING- FOR WITNESS/ RANDOM WITNESS
						BARE LINE PIPE RECEIPT AT YARD
6.	RW	RW	RW	H	X	VISUAL INSPECTION OF PIPES, LR BENDS, ALL OTHER PIPELINE ITEMS ETC. AT YARD, VERIFICATION WITH PIPE TALLY SHEETS ALONG WITH TRANSFER OF PIPE IDENTIFICATION NOS. AND ISSUE OF IMIR/GIIR
7.	RW	RW	W	H	X	RAW MATERIAL IDENTIFICATION AND REVIEW OF MANUFACTURER TEST CERTIFICATES
8.	RW	RW	W	H	X	SAMPLE TESTING OF RAW MATERIAL
9.	RW	RW	RW	H	X	INTERNAL SURFACE INSPECTION , CLEANING , SURFACE ANCHOR PROFILE AS PER SPECIFICATION
10.	W	W	W	H	X	PRE QUALIFICATION TESTING- SAMPLING, TESTING & INSPECTION AS PER SPECIFICATION REQUIREMENT
11.	RW	RW	W	H	X	PRODUCTION SAMPLING, TESTING & INSPECTION AS PER SPECIFICATION REQUIREMENT
12.	RW	W	W	H	X	MATERIAL CONTROL RECORDS AND REPAIR OF INTERNAL COATING AS PER APPROVED PROCEDURE AND PROJECT SPECIFIC REQUIREMENT
13.	RW	RW	W	H	X	MARKING, QUALITY ASSURANCE AND DOCUMENT REVIEW
						IRN FOR ISSUE BY CA/TPI/CONTRACTOR IA
14.	Is	R	R	-	-	ISSUE OF INSPECTION RELEASE NOTE AT VENDOR'S PLACE
**** OTHER REQUIREMENT****						
15.	RW	RW	W	H	X	CHECK PREPARATION FOR SHIPMENT

The Activities listed above are not exhaustive. Inspection of other activities shall be carried out as per requirement of the FS.
Legend & Notes : Explained Separately.

	Offshore Design Section **Engineering Services** **ISO – 9001:2008**	**INSPECTION REQUIREMENT TABLE**	**IRT No.**	**ODS/PIPELINE/IRT/10**
			Rev. No.	**0**
			Discipline	**PIPELINE**
			Page: *1 OF 1*	

Item: INSULATION COATING	**Inspection Category: A**
ONGC FUNCTIONAL SPEC: TBA	

Activity No	1. Inspection by ONGC or ONGC Appointed Certification Agency (CA)	2. Inspection by ONGC Appointed Third Party Inspection Agency (TPI)	3. Inspection by Contractor or Contractor appointed Third Party Inspection Agency	4. Inspection by Vendor / Sub Vendor	5. Certificate / Data to be submitted by Vendor for Review / Approval	STAGES OF INSPECTION
						GENERAL & DOCUMENTS - FOR REVIEW /APPROVAL/ INFORMATION
1.	A	R	R	H	X	INSPECTION AND TEST PLAN
2.	A	R	R	H	X	INSPECTION TESTING AND MANUFACTURING PROCEDURE
3.	R	R	R	H	X	TESTS / INSPECTION REPORTS BY VENDOR
4.	R	R	R	H	X	MATERIAL TEST CERTIFICATES / COMPLIANCE CERTIFICATES
5.	R	R	R	H	X	CALIBRATION CERTIFICATES / REPORTS OF TESTING EQUIPMENTS
						INSPECTION AND TESTING- FOR WITNESS/ RANDOM WITNESS
6.	RW	RW	W	H	X	RAW MATERIAL IDENTIFICATION
7.	RW	RW	W	H	X	INSPECTION OF INCOMING ANTI-CORROSION COATED PIPES- VISUAL INSPECTION & HOLIDAY DETECTION
8.	RW	RW	W	H	X	PRE QUALIFICATION TESTING, SAMPLING, TESTING & INSPECTION AS PER SPECIFICATION REQUIREMENT
9.	RW	RW	W	H	X	PRODUCTION SAMPLING, TESTING & INSPECTION AS PER SPECIFICATION REQUIREMENT
10.	RW	RW	W	H	X	MATERIAL CONTROL RECORDS AND REPAIR OF INSULATION COATING AS PER APPROVED PROCEDURE AND PROJECT SPECIFIC REQUIREMENT
11.	RW	RW	W	H	X	MARKING, QUALITY ASSURANCE AND DOCUMENT REVIEW
						IRN FOR ISSUE BY CA/TPI/CONTRACTOR IA
12.	Is	R	R	-	-	ISSUE OF INSPECTION RELEASE NOTE AT VENDOR'S PLACE
**** OTHER REQUIREMENT****						
13.	RW	RW	W	H	X	CHECK PREPARATION FOR SHIPMENT

The Activities listed above are not exhaustive. Inspection of other activities shall be carried out as per requirement of the FS.
Legend & Notes : Explained Separately.

	Offshore Design Section **Engineering Services** **ISO – 9001:2008**	**INSPECTION REQUIREMENT TABLE**	**IRT No.**	**ODS/PIPELINE/IRT/11**
			Rev. No.	**0**
			Discipline	**PIPELINE**
			Page: *1 OF 1*	

Item: NICKEL – COPPER ALLOY UNS N04400 (MONEL) PLATES AND ASSOCIATE ITEMS	**INSPECTION CATEGORY: C**
ONGC FUNCTIONAL SPEC: 2015	

Activity No	1. Inspection by ONGC or ONGC Appointed Certification Agency (CA)	2. Inspection by ONGC Appointed Third Party Inspection Agency (TPI)	3. Inspection by Contractor or Contractor appointed Third Party Inspection Agency	4. Inspection by Vendor / Sub Vendor	5. Certificate / Data to be submitted by Vendor for Review / Approval	STAGES OF INSPECTION
						GENERAL & DOCUMENTS - FOR REVIEW /APPROVAL /INFORMATION
1.	A	-	R	H	X	INSPECTION AND TEST PLAN
2.	R	-	R	H	X	MATERIAL IDENTIFICATION & MATERIAL TEST CERTIFICATES AND TRACEABILITY RECORDS AS PER ONGC SPEC 2015.
						INSPECTION AND TESTING- FOR WITNESS/ RANDOM WITNESS
3.	-	-	W	H	X	NDT
4.	-	-	W	H	X	FINAL VISUAL AND DIMENSIONAL CHECK
5.	-	-	R	H	X	FINAL DOCUMENTATION REVIEW
						IRN FOR ISSUE BY CA/TPI/CONTRACTOR IA
6.	-	-	Is	-	-	ISSUE OF INSPECTION RELEASE NOTE AT VENDOR'S WORKS
7.	R	R	-	-	-	VERIFICATION OF INSPECTION RELEASE NOTE AT YARD
						**** OTHER REQUIREMENT****
8.	-	R	-	H	X	CHECK PREPARATION FOR SHIPMENT

The Activities listed above are not exhaustive. Inspection of other activities shall be carried out as per requirement of the FS.

Legend & Notes : Explained Separately.

	Offshore Design Section **Engineering Services** **ISO – 9001:2008**	**INSPECTION REQUIREMENT TABLE**	**IRT No.**	**ODS/PIPELINE/IRT/12**
			Rev. No.	**0**
			Discipline	**PIPELINE**
			Page: *1 OF 1*	

Item: FLEXIBLE PIPES					**INSPECTION CATEGORY: A**
ONGC FUNCTIONAL SPEC: 2020E					
Activity No	1. Inspection by ONGC or ONGC Appointed Certification Agency (CA)				
		2. Inspection by LSTK contractor's inspection agency (TPI)			
			3. Inspection by Vendor/ Sub-vendor		
				4. Certificates/ Data to be submitted by Vendor	
					Stages of Inspection
					GENERAL & DOCUMENTS - FOR REVIEW /APPROVAL /INFORMATION
1	A	R	H	X	INSPECTION AND TEST PLAN
2	A	R	H	X	INSPECTION TESTING AND MANUFACTURING PROCEDURE, FAT PROCEDURE
3	R	R	H	X	TESTS / INSPECTION REPORTS BY VENDOR
4	R	R	H	X	MATERIAL TEST CERTIFICATES / COMPLIANCE CERTIFICATES / TYPE APPROVAL CERTIFICATE
5	R	R	H	X	CALIBRATION CERTIFICATES / REPORTS OF TESTING EQUIPMENTS
6	R	R	H	X	AS BUILT DOSSIER, PIPE MANUFACTURING DATA BOOK
7	R	H	H	X	FINAL DOCUMENTATION REVIEW, PRODUCTION REPORTS
					INSPECTION AND TESTING- FOR WITNESS/ RANDOM WITNESS
8	RW	W	H	X	MATERIAL IDENTIFICATION
9	RW	RW	H	X	INPROCESS INSPECTION
10	RW	W	H	X	SAMPLING FOR TESTING
11	RW	W	H	X	CHECK HYDROSTATIC TEST
12	RW	W	H	X	PIPE END FITTING CHECK
13	W	W	H	X	FAT
14	RW	W	H	X	FINAL DIMENSIONAL, VISUAL CHECK, TAGGING/ NAME PLATE CHECK, ACCESSORIES CHECK
					IRN FOR ISSUE BY CA/TPI/CONTRACTOR IA
15	Is	R	-	-	ISSUE OF INSPECTION RELEASE NOTE AT VENDOR'S PLACE
					**** OTHER REQUIREMENT****
16	RW	RW	H	X	CHECK PREPARATION FOR SHIPMENT

The Activities listed above are not exhaustive. Inspection of other activities shall be carried out as per requirement of the FS.

Legend & Notes: Explained separately.

Offshore Design Section Engineering Services ISO – 9001:2008	INSPECTION REQUIREMENT TABLE	IRT No.	ODS/PIPELINE/IRT/13
		Rev. No.	0
		Discipline	PIPELINE
		Page: *1 OF 1*	

Item: SUBSEA BALL VALVE (SOUR SERVICE)					INSPECTION CATEGORY: B
ONGC FUNCTIONAL SPEC: 2025B					
Activity No	1. Inspection by ONGC or ONGC Appointed Certification Agency (CA)	2. Inspection by LSTK contractor's inspection agency (TPI)	3. Inspection by Vendor/ Sub-vendor	4. Certificates/ Data to be submitted by Vendor	Stages of Inspection
					GENERAL & DOCUMENTS -FOR REVIEW /APPROVAL/INFORMATION
1	A	R	H	X	QUALITY PLAN
2	A	R	H	X	INSPECTION AND TESTING PROCEDURE
3	R	R	H	X	WPS AND WELDER QUALIFICATION AS PER ONGC SPEC 2009F.
4	R	R	H	X	MATERIAL TEST AND CORROSION TESTS CERTIFICATES AS PER ONGC SPEC 2025B (INCLUSIVE OF ITS MATERIAL CORRELATION CHART)
5	R	R	H	X	CERTIFICATE REGARDING MAXIMUM BENDING MOMENT PERMISSIBLE FOR VALVE
6	R	R	H	X	MATERIAL TEST AND CORROSION TESTS CERTIFICATES FOR PUP PIECE AS PER ONGC SPEC 2020B / 2020D
7	R	R	H	X	MATERIAL TEST AND CORROSION TESTS CERTIFICATES FOR FLANGES AND FITTINGS AS PER ONGC SPEC 2024B
8	R	R	H	X	MPI OR DPI SHALL BE 100% AS APPLICABLE FOR WELDS & MACHINE SURFACE OF CASTING OR FORGING AS PER ONGC SPEC 2025B
9	R	R	H	X	DIMENSIONAL CHECK REPORTS, VENDOR AS BUILT DOSSIER CONTAINING DRAWINGS, DATA SHEETS, CALCULATIONS, OPERATIONAL MANUAL, VALVE MANUFACTURING DATA BOOK
10	A	H	H	X	FINAL DOCUMENTATION REVIEW
					INSPECTION AND TESTING- FOR WITNESS/ RANDOM WITNESS
11	RW	W	H	X	RADIOGRAPHY TEST FOR CASTING (100% RT FILM REVIEW FOR ALL VALVES BY CA), ULTRASONIC AND OTHER NDE REQUIREMENTS
12	RW	W	H	X	MECHANICAL, CHEMICAL, CORROSION, ELECTRICAL & CATHODIC PROTECTION CONTINUITY, CAVITY RELIEF AND ALL OTHER TESTS IN COMPLIANCE WITH ONGC SPEC 2025B.
13	W	H	H	X	VALVE HYDROSTATIC AND PNEUMATIC TESTING IN COMPLIANCE WITH REQUIREMENTS OF API 6DSS AND ONGC SPEC 2025B.
14	W	H	H	X	HYPERBARIC PRESSURE TEST(QUALIFICATION TESTING)
15	W	H	H	X	FUNCTIONAL TEST IN COMPLIANCE WITH ONGC SPEC 2025B.
16	W	W	H	X	FINAL VISUAL AND DIMENSIONAL CHECK
17	RW	W	H	X	SURFACE PREPARATION, ANTI COROSION AND ANTI FOULING PAINTING AS PER DATA SHEET AS PER ONGC SPEC 2005
					IRN FOR ISSUE BY CA/TPI/CONTRACTOR IA
18	Is	R	-	-	ISSUE OF INSPECTION RELEASE NOTE AT VENDOR'S PLACE
					**** OTHER REQUIREMENT****
19	RW	RW	H	X	CHECK PREPARATION FOR SHIPMENT
20	W	W	-	-	SITE ACCEPTANCE TEST AT OFFSHORE

The Activities listed above are not exhaustive. Inspection of other activities shall be carried out as per requirement of the FS.
Legend & Notes: Explained Separately.

	Offshore Design Section **Engineering Services** **ISO – 9001:2008**	**INSPECTION REQUIREMENT TABLE**	**IRT No.**	**ODS/PIPELINE/IRT/14**
			Rev. No.	**0**
			Discipline	**PIPELINE**
			Page: *1 OF 1*	

Item:	**SUBSEA BALL VALVE (NON-SOUR SERVICE)**				**INSPECTION CATEGORY: B**
ONGC FUNCTIONAL SPEC: 2025A					
Activity No	1. Inspection by ONGC or ONGC Appointed Certification Agency (CA)				
		2. Inspection by LSTK contractor's inspection agency (TPI)			
			3. Inspection by Vendor/ Sub-vendor		
				4. Certificates/ Data to be submitted by Vendor	
					Stages of Inspection
					GENERAL & DOCUMENTS -FOR REVIEW /APPROVAL/INFORMATION
1	A	R	H	X	QUALITY PLAN
2	A	R	H	X	INSPECTION AND TESTING PROCEDURE
3	R	R	H	X	WPS AND WELDER QUALIFICATION AS PER ONGC SPEC 2009F.
4	R	R	H	X	MATERIAL TEST AND CORROSION TESTS CERTIFICATES AS PER ONGC SPEC 2025A (INCLUSIVE OF ITS MATERIAL CORRELATION CHART)
5	R	R	H	X	CERTIFICATE REGARDING MAXIMUM BENDING MOMENT PERMISSIBLE FOR VALVE
6	R	R	H	X	MATERIAL TEST AND CORROSION TESTS CERTIFICATES FOR PUP PIECE AS PER ONGC SPEC 2020A / 2020C
7	R	R	H	X	MATERIAL TEST AND CORROSION TESTS CERTIFICATES FOR FLANGES AND FITTINGS AS PER ONGC SPEC 2024A
8	R	R	H	X	MPI OR DPI SHALL BE 100% AS APPLICABLE FOR WELDS & MACHINE SURFACE OF CASTING OR FORGING AS PER ONGC SPEC 2025A
9	R	R	H	X	DIMENSIONAL CHECK REPORTS, VENDOR AS BUILT DOSSIER CONTAINING DRAWINGS, DATA SHEETS, CALCULATIONS, OPERATIONAL MANUAL, VALVE MANUFACTURING DATA BOOK
10	A	H	H	X	FINAL DOCUMENTATION REVIEW
					INSPECTION AND TESTING- FOR WITNESS/ RANDOM WITNESS
11	RW	W	H	X	RADIOGRAPHY TEST FOR CASTING (100% RT FILM REVIEW FOR ALL VALVES BY CA), ULTRASONIC AND OTHER NDE REQUIREMENTS
12	RW	W	H	X	MECHANICAL, CHEMICAL, CORROSION, ELECTRICAL & CATHODIC PROTECTION CONTINUITY, CAVITY RELIEF AND ALL OTHER TESTS IN COMPLIANCE WITH ONGC SPEC 2025B.
13	W	H	H	X	VALVE HYDROSTATIC AND PNEUMATIC TESTING IN COMPLIANCE WITH REQUIREMENTS OF API 6DSS AND ONGC SPEC 2025B.
14	W	H	H	X	HYPERBARIC PRESSURE TEST(QUALIFICATION TESTING)
15	W	H	H	X	FUNCTIONAL TEST IN COMPLIANCE WITH ONGC SPEC 2025A.
16	W	W	H	X	FINAL VISUAL AND DIMENSIONAL CHECK
17	RW	W	H	X	SURFACE PREPARATION, ANTI COROSION AND ANTI FOULING PAINTING AS PER DATA SHEET
					IRN FOR ISSUE BY CA/TPI/CONTRACTOR IA
18	Is	R	-	-	ISSUE OF INSPECTION RELEASE NOTE AT VENDOR'S PLACE
					**** OTHER REQUIREMENT****
20	RW	RW	H	X	CHECK PREPARATION FOR SHIPMENT
21	W	W	-	-	SITE ACCEPTANCE TEST AT OFFSHORE

The Activities listed above are not exhaustive. Inspection of other activities shall be carried out as per requirement of the FS.

Legend & Notes : Explained Separately.

	Offshore Design Section **Engineering Services** **ISO – 9001:2008**	**INSPECTION REQUIREMENT TABLE**	**IRT No.**	**ODS/PIPELINE/IRT/15**
			Rev. No.	**0**
			Discipline	**PIPELINE**
			Page: *1 OF 1*	

Item: SUBSEA FLANGES (SOUR SERVICE)					**INSPECTION CATEGORY: B**
ONGC SPEC: 2024 B					
Activity No	1. Inspection by ONGC or ONGC Appointed Certification Agency (CA)				
		2. Inspection by LSTK contractor's inspection agency (TPI)			
			3. Inspection by Vendor/ Sub-vendor		
				4. Certificates/ Data to be submitted by Vendor	
					Stages of Inspection
					GENERAL & DOCUMENTS -FOR REVIEW /APPROVAL /INFORMATION
1	A	R	H	X	QUALITY PLAN
2	A	R	H	X	INSPECTION AND TESTING PROCEDURE
3	R	R	H	X	MATERIAL TEST AND CORROSION TESTS CERTIFICATES AS PER ONGC SPEC 2024B REV 0
4	R	R	H	X	DIMENSIONAL CHECK REPORTS, VENDOR AS BUILT DOSSIER CONTAINING DRAWINGS, DATA SHEETS & CALCULATIONS
5	R	W	H	X	SURFACE PREPARATION AND PROTECTIVE COATING AS PER ONGC SPEC 2005
6	R	H	H	X	FINAL DOCUMENTATION REVIEW
					INSPECTION AND TESTING- FOR WITNESS/ RANDOM WITNESS
7	RW	W	H	X	MATERIAL IDENTIFICATION
8	RW	W	H	X	NDE REQUIREMENTS
9	RW	W	H	X	MECHANICAL, CHEMICAL, CORROSION, AND ALL OTHER TESTS IN COMPLIANCE WITH ONGC SPEC 2024B REV 0.
10	W	W	H	X	FINAL VISUAL AND DIMENSIONAL CHECK
					IRN FOR ISSUE BY CA/TPI/CONTRACTOR IA
11	Is	R	-	-	ISSUE OF INSPECTION RELEASE NOTE AT VENDOR'S PLACE
					**** OTHER REQUIREMENT****
12	RW	W	H	X	CHECK PREPARATION FOR SHIPMENT

The Activities listed above are not exhaustive. Inspection of other activities shall be carried out as per requirement of the FS.

Legend & Notes : Explained Separately.

	Offshore Design Section **Engineering Services** **ISO – 9001:2008**	**INSPECTION REQUIREMENT TABLE**	**IRT No.**	**ODS/PIPELINE/IRT/16**
			Rev. No.	**0**
			Discipline	**PIPELINE**
			Page: *1 OF 1*	

ITEM: SUBSEA FLANGES (NON-SOUR SERVICE)					**INSPECTION CATEGORY: B**
ONGC FUNCTIONAL SPEC: 2024 A					
Activity No	1. Inspection by ONGC or ONGC Appointed Certification Agency (CA)				
		2. Inspection by LSTK contractor's inspection agency (TPI)			
			3. Inspection by Vendor/ Sub-vendor		
				4. Certificates/ Data to be submitted by Vendor	
					Stages of Inspection
					GENERAL & DOCUMENTS -FOR REVIEW /APPROVAL /INFORMATION
1	A	R	H	X	QUALITY PLAN
2	A	R	H	X	INSPECTION AND TESTING PROCEDURE
3	R	R	H	X	MATERIAL TEST CERTIFICATES AS PER ONGC SPEC 2024A
4	R	R	H	X	DIMENSIONAL CHECK REPORTS, VENDOR AS BUILT DOSSIER CONTAINING DRAWINGS, DATA SHEETS & CALCULATIONS
5	R	W	H	X	SURFACE PREPARATION AND PROTECTIVE COATING AS PER ONGC SPEC 2005
6	A	H	H	X	FINAL DOCUMENTATION REVIEW
					INSPECTION AND TESTING- FOR WITNESS/ RANDOM WITNESS
7	RW	W	H	X	MATERIAL IDENTIFICATION
8	RW	W	H	X	NDE REQUIREMENTS
9	RW	W	H	X	MECHANICAL, CHEMICAL AND ALL OTHER TESTS IN COMPLIANCE WITH ONGC SPEC 2024A REV 0.
10	W	W	H	X	FINAL VISUAL AND DIMENSIONAL CHECK
					IRN FOR ISSUE BY CA/TPI/CONTRACTOR IA
11	Is	R	-	-	ISSUE OF INSPECTION RELEASE NOTE AT VENDOR'S PLACE
					**** OTHER REQUIREMENT****
12	RW	W	H	X	CHECK PREPARATION FOR SHIPMENT

The Activities listed above are not exhaustive. Inspection of other activities shall be carried out as per requirement of the FS.

Legend & Notes : Explained Separately.

	Offshore Design Section **Engineering Services** **ISO – 9001:2008**	**INSPECTION REQUIREMENT TABLE**	**IRT No.**	**ODS/Pipeline/IRT/17**
			Rev. No.	**0**
			Discipline	**PIPELINE**
			Page: *1 OF 1*	

ITEM: SUBSEA FLOW TEE (SOUR SERVICE)					**INSPECTION CATEGORY: B**
ONGC FUNCTIONAL SPEC: 2028 B					
Activity No	1. Inspection by ONGC or ONGC Appointed Certification Agency (CA)				
		2. Inspection by LSTK contractor's inspection agency (TPI)			
			3. Inspection by Vendor/ Sub-vendor		
				4. Certificates/ Data to be submitted by Vendor	
					Stages of Inspection
					GENERAL & DOCUMENTS - FOR REVIEW /APPROVAL /INFORMATION
1	A	R	H	X	QUALITY PLAN
2	A	R	H	X	INSPECTION, TESTING AND MANUFACTURING PROCEDURE, WPS, PQR & WELDER QUALIFICATION
3	R	R	H	X	TESTS / INSPECTION REPORTS BY VENDOR
4	R	R	H	X	MECHANICAL, CHEMICAL & CORROSION TEST CERTIFICATES / COMPLIANCE CERTIFICATE FOR TEE AND PIPE
5	R	R	H	X	CALIBRATION CERTIFICATES / REPORTS OF TEST EQUIPMENTS, NDT TECHNICIAN QUALIFICATION CERTIFICATE
6	A	H	H	X	FINAL DOCUMENTATION REVIEW
					INSPECTION AND TESTING- FOR WITNESS/ RANDOM WITNESS
7	RW	RW	H	X	MATERIAL IDENTIFICATION
8	RW	W	H	X	MECHANICAL, CHEMICAL & CORROSION TESTING AS PER ONGC SPEC NO. 2028B.
9	W	W	H	X	HYDROTESTING
10	W	W	H	X	VISUAL, NDT & DIMENSIONAL CHECK & WEIGHT CHECK, MARKING, SR CHART. 100% RT FILM REVIEW BY TPIA (IN CASE OF RADIOGRAPHY)
11	RW	W	H	X	SURFACE PREPERATION & COATING AS PER 2005
					IRN FOR ISSUE BY CA/TPI/CONTRACTOR IA
12	Is	R	-	-	ISSUE OF INSPECTION RELEASE NOTE AT VENDOR'S PLACE
					**** OTHER REQUIREMENT****
13	RW	RW	H	X	CHECK PREPARATION FOR SHIPMENT (INCLUDING BEVEL PROTECTOR)

The Activities listed above are not exhaustive. Inspection of other activities shall be carried out as per requirement of the FS.
Legend & Notes : Explained Separately .

	Offshore Design Section **Engineering Services** **ISO – 9001:2008**	**INSPECTION REQUIREMENT TABLE**	**IRT No.**	**ODS/PIPELINE/IRT/18**
			Rev. No.	**0**
			Discipline	**PIPELINE**
			Page: *1 OF 1*	

ITEM: SUBSEA FLOW TEE (NON-SOUR SERVICE)					**INSPECTION CATEGORY: B**
ONGC FUNCTIONAL SPEC: 2028 A					
Activity No	1. Inspection by ONGC or ONGC Appointed Certification Agency (CA)	2. Inspection by LSTK contractor's inspection agency (TPI)	3. Inspection by Vendor/ Sub-vendor	4. Certificates/ Data to be submitted by Vendor	Stages of Inspection
					GENERAL & DOCUMENTS - FOR REVIEW /APPROVAL / INFORMATION
1	A	R	H	X	QUALITY PLAN
2	A	R	H	X	INSPECTION, TESTING AND MANUFACTURING PROCEDURE, WPS, PQR & WELDER QUALIFICATION
3	R	R	H	X	TESTS / INSPECTION REPORTS BY VENDOR
4	R	R	H	X	MECHANICAL AND CHEMICAL TEST CERTIFICATES / COMPLIANCE CERTIFICATE FOR TEE AND PIPE
5	R	R	H	X	CALIBRATION CERTIFICATES / REPORTS OF TEST EQUIPMENTS, NDT TECHNICIAN QUALIFICATION CERTIFICATE
6	A	H	H	X	FINAL DOCUMENTATION REVIEW
					INSPECTION AND TESTING- FOR WITNESS/ RANDOM WITNESS
7	RW	RW	H	X	MATERIAL IDENTIFICATION
8	RW	W	H	X	MECHANICAL AND CHEMICAL TESTING AS PER ONGC SPEC NO. 2028A.
9	W	W	H	X	HYDROTESTING
10	W	W	H	X	VISUAL, NDT & DIMENSIONAL CHECK & WEIGHT CHECK, MARKING, SR CHART. 100% RT FILM REVIEW BY TPIA (IN CASE OF RADIOGRAPHY)
11	RW	W	H	X	SURFACE PREPERATION & COATING AS PER 2005
					IRN FOR ISSUE BY CA/TPI/CONTRACTOR IA
12	Is	R	-	-	ISSUE OF INSPECTION RELEASE NOTE AT VENDOR'S PLACE
					**** OTHER REQUIREMENT****
13	RW	RW	H	X	CHECK PREPARATION FOR SHIPMENT (INCLUDING BEVEL PROTECTOR)

The Activities listed above are not exhaustive. Inspection of other activities shall be carried out as per requirement of the FS

Legend & Notes : Explained Separately.

	Offshore Design Section **Engineering Services** **ISO – 9001:2008**	**INSPECTION REQUIREMENT TABLE**	**IRT No.**	**ODS/PIPELINE/IRT/19**
			Rev. No.	**0**
			Discipline	**PIPELINE**
			Page: *1 OF 2*	

ITEM: SUBSEA PIGGABLE WYE (SOUR SERVICE)					**INSPECTION CATEGORY: A**
ONGC FUNCTIONAL SPEC: 2030 B					
Activity No	1. Inspection by ONGC or ONGC Appointed Certification Agency (CA)				
		2. Inspection by LSTK contractor's inspection agency (TPI)			
			3. Inspection by Vendor/ Sub-vendor		
				4. Certificates/ Data to be submitted by Vendor	
					Stages of Inspection
					GENERAL & DOCUMENTS - FOR REVIEW /APPROVAL / INFORMATION
1	A	R	H	X	QUALITY PLAN
2	A	R	H	X	INSPECTION, TESTING AND MANUFACTURING PROCEDURE
3	A	R	H	X	WPS, PQR & WELDER QUALIFICATION AS PER ONGC SPEC 2009F
4	R	R	H	X	TESTS / INSPECTION REPORTS BY VENDOR
5	RW	W	H	X	MTC FOR PUP PIECE AND FLANGES TO BE SUBMITTED AS PER ONGC SPEC 2020B / 2020D AND 2024B RESPECTIVELY
6	R	R	H	X	VENDOR DOSSIER CONTAINING MATERIAL TEST CERTIFICATES (FROM STARTING MATERIAL INGOTS, FORGING, HEAT TREATMENT OF FORGING) INCLUDING MECHANICAL, CHEMICAL & CORROSION TESTING COMPLIANCE CERTIFICATE, PRODUCT ANALYSIS, FEM ANALYSIS, AS BUILT DRAWINGS AS PER ONGC SPEC 2030B
7	R	R	H	X	CALIBRATION CERTIFICATES / REPORTS OF TEST EQUIPMENTS, NDT TECHNICIAN QUALIFICATION CERTIFICATE
8	R	R	H	X	SURFACE PREPARATION AND PROTECTIVE COATING PROCEDURE
	A	H	H	X	FINAL DOCUMENTATION REVIEW
9					**INSPECTION AND TESTING- FOR WITNESS/ RANDOM WITNESS**
10	W	W	H	X	MATRIAL IDENTIFICATION (FORGED MATERIAL)
11	W	W	H	X	SAMPLING AND MECHANICAL, CHEMICAL & CORROSION TESTING AS PER ONGC SPEC 2030B. (LAB CHECK TEST REPORT TO BE SUBMITTED FOR REVIEW)
12	RW	W	H	X	STRESS RELIEVING AS PER ONGC SPEC 2030B (ORIGINAL CHART TO BE SUBMITTED FOR REVIEW)
13	RW	W	H	X	WYE BODY HEAT TREATMENT
14	W	W	H	X	HYDROTESTING AS PER ONGC SPEC 2030B READ WITH DATA SHEET
15	W	H	H	X	NON DESTRUCTIVE TESTING (UT & MPI) AS PER ONGC SPEC 2030B (100% RT FILM REVIEW BY TPI FOR GIRTH WELD)
16	RW	W	H	X	POST WELD HEAT TREATMENT AS PER ONGC SPEC 2030B (ORIGINAL CHART TO BE SUBMITTED FOR REVIEW)
17	W	H	H	X	FUNCTIONAL TEST FOR PIGGABILITY AS PER ONGC SPEC 2030B

	Offshore Design Section **Engineering Services** **ISO – 9001:2008**	**INSPECTION REQUIREMENT TABLE**	**IRT No.**	**ODS/PIPELINE/IRT/19**
			Rev. No.	**0**
			Discipline	**PIPELINE**
			Page: *2 OF 2*	

Activity No	1. Inspection by ONGC or ONGC Appointed Certification Agency (CA)	2. Inspection by LSTK contractor's inspection agency (TPI)	3. Inspection by Vendor/ Sub-vendor	4. Certificates/ Data to be submitted by Vendor	Stages of Inspection
18	W	W	H	X	VISUAL AND DIMENSIONAL CHECK, WEIGHT CHECK
19	W	W	H	X	MARKING, SURFACE PREPARATION AND PROTECTIVE COATING AS PER DATA SHEET
					IRN FOR ISSUE BY CA/TPI/CONTRACTOR IA
20	Is	R	-	-	ISSUE OF INSPECTION RELEASE NOTE AT VENDOR'S PLACE
					**** OTHER REQUIREMENT****
21	RW	W	H	X	CHECK PREPARATION FOR SHIPMENT

The Activities listed above are not exhaustive. Inspection of other activities shall be carried out as per requirement of the FS.

Legend & Notes : Explained Separately.

	Offshore Design Section **Engineering Services** **ISO – 9001:2008**	**INSPECTION REQUIREMENT TABLE**	**IRT No.**	**ODS/PIPELINE/IRT/20**
			Rev. No.	**0**
			Discipline	**PIPELINE**
			Page: *1 OF 2*	

ITEM: SUBSEA PIGGABLE WYE (NON-SOUR SERVICE)					**INSPECTION CATEGORY: A**
ONGC FUNCTIONAL SPEC: 2030 A					
Activity No	1. Inspection by ONGC or ONGC Appointed Certification Agency (CA)				
		2. Inspection by LSTK contractor's inspection agency (TPI)			
			3. Inspection by Vendor/ Sub-vendor		
				4. Certificates/ Data to be submitted by Vendor	
					Stages of Inspection
					GENERAL & DOCUMENTS - FOR REVIEW /APPROVAL / INFORMATION
1	A	R	H	X	QUALITY PLAN
2	A	R	H	X	INSPECTION, TESTING AND MANUFACTURING PROCEDURE
3	A	R	H	X	WPS, PQR & WELDER QUALIFICATION AS PER ONGC SPEC 2009F
4	R	R	H	X	TESTS / INSPECTION REPORTS BY VENDOR
5	RW	W	H	X	MTC FOR PUP PIECE AND FLANGES TO BE SUBMITTED AS PER ONGC SPEC 2020A / 2020C AND 2024A RESPECTIVELY
6	R	R	H	X	VENDOR DOSSIER CONTAINING MATERIAL TEST CERTIFICATES (FROM STARTING MATERIAL INGOTS, FORGING, HEAT TREATMENT OF FORGING) INCLUDING MECHANICAL, CHEMICAL TESTING COMPLIANCE CERTIFICATE, PRODUCT ANALYSIS, FEM ANALYSIS, AS BUILT DRAWINGS AS PER ONGC SPEC 2030A
7	R	R	H	X	CALIBRATION CERTIFICATES / REPORTS OF TEST EQUIPMENTS, NDT TECHNICIAN QUALIFICATION CERTIFICATE
8	R	R	H	X	SURFACE PREPARATION AND PROTECTIVE COATING PROCEDURE
	A	H	H	X	FINAL DOCUMENTATION REVIEW
9					**INSPECTION AND TESTING- FOR WITNESS/ RANDOM WITNESS**
10	W	W	H	X	MATRIAL IDENTIFICATION (FORGED MATERIAL)
11	W	W	H	X	SAMPLING AND MECHANICAL, CHEMICAL TESTING AS PER ONGC SPEC 2030A REV 0. (LAB CHECK TEST REPORT TO BE SUBMITTED FOR REVIEW)
12	RW	W	H	X	STRESS RELIEVING AS PER ONGC SPEC 2030A (ORIGINAL CHART TO BE SUBMITTED FOR REVIEW)
13	RW	W	H	X	WYE BODY HEAT TREATMENT
14	W	W	H	X	HYDROTESTING AS PER ONGC SPEC 2030A READ WITH DATA SHEET
15	W	H	H	X	NON DESTRUCTIVE TESTING (UT & MPI) AS PER ONGC SPEC 2030A (100% RT FILM REVIEW BY TPI FOR GIRTH WELD)
16	RW	W	H	X	POST WELD HEAT TREATMENT AS PER ONGC SPEC 2030A (ORIGINAL CHART TO BE SUBMITTED FOR REVIEW)

	Offshore Design Section **Engineering Services** **ISO – 9001:2008**	**INSPECTION REQUIREMENT TABLE**	**IRT No.**	**ODS/PIPELINE/IRT/20**
			Rev. No.	**0**
			Discipline	**PIPELINE**
			Page: *2 OF 2*	

Activity No	1. Inspection by ONGC or ONGC Appointed Certification Agency (CA)	2. Inspection by LSTK contractor's inspection agency (TPI)	3. Inspection by Vendor/ Sub-vendor	4. Certificates/ Data to be submitted by Vendor	Stages of Inspection
17	W	H	H	X	FUNCTIONAL TEST FOR PIGGABILITY AS PER ONGC SPEC 2030A
18	W	W	H	X	VISUAL AND DIMENSIONAL CHECK, WEIGHT CHECK
19	W	W	H	X	MARKING, SURFACE PREPARATION AND PROTECTIVE COATING AS PER DATA SHEET
20	A	H	H	X	FINAL DOCUMENTATION REVIEW AND ISSUE OF INSPECTION RELEASE NOTE
					IRN FOR ISSUE BY CA/TPI/CONTRACTOR IA
21	Is	R	-	-	ISSUE OF INSPECTION RELEASE NOTE AT VENDOR'S PLACE
					**** OTHER REQUIREMENT****
22	RW	W	H	X	CHECK PREPARATION FOR SHIPMENT

The Activities listed above are not exhaustive. Inspection of other activities shall be carried out as per requirement of the FS.

Legend & Notes : Explained Separately.

ONGC	Offshore Design Section Engineering Services ISO – 9001:2008	LIST OF IRTs (INSPECTION REQUIREMENT TABLE) & APPROVAL	Date	20.04.2016
			Discipline	Mechanical
			Page: *1 OF 4*	

Sl. No.	Item Description	IRT No.	Inspection Category	Rev. No.	Rev. Date
1	DECK Crane (PEDESTAL)	ODS/MECH/IRT/01	A	0	08/03/2016
2	Air/HC Gas Driven Reciprocating Pump	ODS/MECH/IRT/02	B	0	08/03/2016
3	CODED VESSELS	ODS/MECH/IRT/03	A	0	08/03/2016
4	Instrument and Utility Gas System	ODS/MECH/IRT/04	B	0	08/03/2016
5	Material Handling Equipment (Chain Pulley Block)	ODS/MECH/IRT/5	B	0	08/03/2016
6	Shell & Tube Heat Exchanger	ODS/MECH/IRT/6	A	0	08/03/2016
7	Primary & Secondary FG Skid	ODS/MECH/IRT/08	A	0	08/03/2016
8	HVAC System	ODS/MECH/IRT/09	A	0	08/03/2016
9	Sewage Treatment Package	ODS/MECH/IRT/10	B	0	08/03/2016
10	Utility Water Pump (Submergible)	ODS/MECH/IRT/11	A	0	08/03/2016
11	Rotary Gear Pump	ODS/MECH/IRT/12	B	0	08/03/2016
12	Fire Water Pump	ODS/MECH/IRT/13	A	0	08/03/2016
13	AIR DRYER	ODS/MECH/IRT/14-B	B	0	08/03/2016
14	Instrument and Utility Air System	MR/ODS/IRT/14	A	0	08/03/2016
15	Starting Air Compressor Package	ODS/MECH/IRT/14A	A	0	08/03/2016
16	Sea Water Lift Pump	ODS/MECH/IRT/15	A	0	08/03/2016

Prepared / Revised By	Reviewed By	Approved By

ONGC	Offshore Design Section Engineering Services ISO – 9001:2008	LIST OF IRTs (INSPECTION REQUIREMENT TABLE) & APPROVAL	Date	20.04.2016
			Discipline	Mechanical
			Page: *2 OF 4*	

Sl. No.	Item Description	IRT No.	Inspection Category	Rev. No.	Rev. Date
17	PRODUCED WATER CONDITIONING SYSTEM	ODS/MECH/IRT/16	A	0	08/03/2016
18	Emergency Generator	ODS/MECH/IRT/17	A	0	08/03/2016
19	Chlorinator	ODS/MECH/IRT/18	B	0	08/03/2016
20	Sea Water Fine Filters skids	ODS/MECH/IRT/19	B	0	08/03/2016
21	De Oxygenation System	ODS/MECH/IRT/20	A	0	08/03/2016
22	Centrifugal Pump (MIP & MOL)	ODS/MECH/IRT/21	A	0	08/03/2016
23	SUMP CASSION WITH BLOW CASE	ODS/MECH/IRT/22	B	0	08/03/2016
24	CHEMICAL STORAGE & INJECTION SYSTEM	ODS/MEC/IRT/23	B	0	08/03/2016
25	Centrifugal Pump (Sump Pump)	ODS/MECH/IRT/24	B	0	08/03/2016
26	Positive Displacement Pump-Controlled Volume (Motor Driven)	ODS/MECH/IRT/25	B	0	08/03/2016
27	Reciprocating Plunger Pump	ODS/MECH/IRT/27	A	0	08/03/2016
28	Item : Vacuum Pump	ODS/MECH/IRT/28	B	0	08/03/2016
29	Motor Driven Process Gas Compressor	ODS/MECH/IRT/29-M	A	0	08/03/2016
30	Turbine Driven Process Gas Compressor	ODS/MECH/IRT/29	A	0	08/03/2016
31	Gas Turbine Generator	ODS/MECH/IRT/30	A	0	08/03/2016
32	DG Set (Portable)	ODS/MECH/IRT/31	B	0	08/03/2016

Prepared / Revised By	Reviewed By	Approved By

	Offshore Design Section Engineering Services ISO – 9001:2008	LIST OF IRTs (INSPECTION REQUIREMENT TABLE) & APPROVAL	Date	20.04.2016
			Discipline	Mechanical
			Page: *3 OF 4*	

Sl. No.	Item Description	IRT No.	Inspection Category	Rev. No.	Rev. Date
33	CO2 Snuffing System	ODS/MECH/IRT/32	B	0	08/03/2016
34	Air Cooled Heat Exchanger	ODS/MECH/IRT/33	A	0	08/03/2016
35	WASTE HEAT RECOVERY UNIT	ODS/MECH/IRT/34	A	0	08/03/2016
36	Nitrogen Generator Package	ODS/MECH/IRT/36	A	0	08/03/2016
37	Water Maker System	ODS/MECH/IRT/38	B	0	08/03/2016
38	GDU System	ODS/MECH/IRT/40	A	0	08/03/2016
39	Gas Sweetening & Regeneration Package	ODS/MECH/IRT/41	A	0	08/03/2016
40	HP & LP Flare Tip	ODS/MECH/IRT/42	B	0	08/03/2016
41	Travelling Bridge Crane / Electric Hoist	ODS/MECH/IRT/43	B	0	08/03/2016
42	Jet Fuel System & ATF Pump	ODS/MECH/IRT/44	A	0	08/03/2016
43	Diesel Centrifuge	ODS/MECH/IRT/45	B	0	08/03/2016
44	Monorail (Electric) Hoist	ODS/MECH/IRT/46	B	0	08/03/2016
45	FILTERS	ODS/MECH/IRT/47	A	0	08/03/2016
46	Air/Natural Gas Operated Double Diaphram Pump	ODS/MECH/IRT/48	B	0	08/03/2016
47	LP Gas Compressor Package/Screw Gas compressor	ODS/MECH/IRT/49	A	0	08/03/2016
48	Hot Oil Pump	ODS/MECH/IRT/50	A	0	08/03/2016

Prepared / Revised By	Reviewed By	Approved By

	Offshore Design Section Engineering Services ISO – 9001:2008	LIST OF IRTs (INSPECTION REQUIREMENT TABLE) & APPROVAL	Date	20.04.2016
			Discipline	Mechanical
			Page: *4 OF 4*	

Sl. No.	Item Description	IRT No.	Inspection Category	Rev. No.	Rev. Date
49	Reciprocating Gas Compressor Package/Fuel Gas compressor	ODS/MECH/IRT/51	A	0	08/03/2016
50	Centrifugal Pumps (Pot Water, Cooling Water, etc.)	ODS/MECH/IRT/52	B	0	08/03/2016
51	DCP Skid	ODS/MECH/IRT/Safety 01	B	0	08/03/2016
52	Fire Fghting Equipment	ODS/MECH/IRT/Safety 02	C	0	08/03/2016
53	Life Saving Equipment	ODS/MECH/IRT/Safety 03	B	0	08/03/2016
54	Breathing Air Compressor Package	ODS/MECH/IRT/Safety 04	B	0	08/03/2016
55	SURVIVAL CRAFT	ODS/MECH/IRT/ Safety 08	B	0	08/03/2016
56	ITEM : Clean Agent System	ODS/MECH/IRT/Safety 09	B	0	08/03/2016
57	H2S Capsule/ Safe Shelter	ODS/MECH/IRT/Safety 10	B	0	08/03/2016

Prepared / Revised By	Reviewed By	Approved By

	Offshore Design Section Engineering Services (ISO – 9001:2008)	INSPECTION REQUIREMENT TABLE	IRT No.	ODS/MECH/IRT/01
			Rev No	0
			Discipline	Mechanical

Item: DECK Crane (PEDESTAL)	Inspection Category : A

ACTIVITY No	1. Inspection by ONGC / Certification Agency CA.	2. Inspection by ONGC / Third Party Inspection Agency (TPI)	3. Inspection by EPC / EPC's Inspection Agency (IA)	4. Inspection by Vendor/ Sub vendor	5. Certificates/compliance/Data/Information to be submitted by vendor for Review/ Approval	6. STAGES OF INSPECTION INVOLVED.
1	I	--	H	H	---	**Pre-Inspection Meeting (as required)**
2	A	---	A	H	X	Approval of Inspection and test plan (ITP) of vendor
3	A	-	R	H	X	FAT & SAT Procedure
						Skid / Base Frame / Boom
4	A	---	R	H	X	WPS, PQR & WPQ (as applicable) as per ONGC Spec.
5	RW	---	RW	H	X	Weld inspection and NDT (As per approved Procedures and ITP)
6	W	---	W	W	X	Final Visual and dimensional check
						Engine Performance and Functional Test
7	W	---	W	W	X	Fuel Consumption and Governing test as per data sheet
8	W	---	W	W	X	Brake Horsepower Testing (---Kw-----rpm) at 10% overload test for One hour as per spec.
9	W	---	W	W	X	Noise level Test (Engine with Crane)
10	W	---	W	W	X	Vibration Test
11	W	---	W	W	X	Engine Functional Test-Full load test for four hour as per spec.
12	W	---	W	W	X	Engine instrumentation Checks as per spec.
						Inspection of BOI's (Bought Out Items)
13	RW	---	RW	W	X	Controls, Indicators, Alarms and Instrumentation in operator's cabin as per the specification and data sheet
14	RW	---	RW	W	X	Installation and testing of all safety / protective devices like Boom stop, Hoist travel stop, Limit switches, Warning lights etc.
15	RW	---	RW	W	X	Installation of all access platforms, Ladders, gratings, safety insulation of hot exhaust pipes, Acoustic housing etc.
16	RW	---	RW	W	X	Wire rope and Sling inspection for kinking ,cut, broken or crushing of strands etc. including SWL(Safe Working Load)
17	W	---	W	H	X	Wire rope braking strength test as per spec.
						Deck Crane Performance and functional Tests as per spec.

18	W	---	W	W	X	Engine starting - Pneumatic and Hydraulic.
19	W	---	W	W	X	360 degree rotation @ full load at specified RPM.
20	W	---	W	W	X	Full functional test (i.e. hoisting-anti two block test, luffing, slewing and swinging speed test, wire rope reaving (high and low speed on Rope drum etc.)
21	W	---	W	W	X	Static load test and over load test at 1.33 times safe working load, followed by NDE of critical components for damage check.
22	W	---	W	W	X	Dynamic Running test
23	W	---	W	W	X	Control Panel Running Test, Control panel functional test.
24	W	---	R	W	X	Heave Compensation test (if stated in data sheet)- Motion Compensator.
25	RW	---	W	H	X	Main and Auxiliary Hook assembly-Proof Load Testing and double SWL.
26	W	---	RW	W	X	Strain gauge Test (API-2C) if applicable
27	R		R	R	X	Calibration Report of Load Sensor from approved / recognized Laboratory
						Type Test Certification
28	R	---	R	R	X	Area Classification and IP certification of all instrumentation items and panels by recognized Third party Lab
29	R	---	R	R	X	Engine type approval record from EEMUA if applicable.
						Surface preparation & Painting / Coating
30	RW	---	RW	W	X	Surface preparation
31	RW	---	RW	W	X	Painting / coating inspection as per ONGC spec.
						Other requirements
32	R	---	R	R	X	Review of final documentation to comply with specification requirements(MDR-Mfg. Data Records)
33	W	---	W	W	X	Final Packing inspection for completeness during / after packing -tagging, preservation, including spares.
34	R	---	R	R	X	Wire rope Test Documentation, Covering break test as per API-9A as applicable.
35	R	-	R	R	X	Pendent Test certificates
						DECK CRANE ASSEMBLY & FINAL TESTING
36	W	---	W	W		Main hoist and Aux. Hoist & speed test at various Radii as per load chart
37	W	---	W	W		Speed Test for Main and Aux Hoist & Swing
38	W	---	W	W		Functional & Overload Testing
39	R	---	R	H		Inspection Record Book
40	Is	---	R	H		Issue of Release Note
						IMIR/GIIR at Yard/Offshore
41	W	W	-		X	Verification of items as per IRN
42	W	W			X	IMIR/GIIR on the basis of IRN
43	W	W		H	X	SAT/Performance Test of Package in field (offshore platform) by the vendor.

***Refer Applicable Electrical IRT for Electrical Equipments/Items.**				
EGENDS & NOTES : Explained Separately				
FORMAT No.	Ref. PROCEDURE No.	ISSUE No.	REV. No.	REV. DATE:
ODS/SOF/004A	ODS/SOP/023	01	00	08.03.2016

ओएनजीसी ONGC	**Offshore Design Section Engineering Services (ISO – 9001:2008)**					**INSPECTION REQUIREMENT TABLE**	**IRT No.** ODS/MECH/IRT/02 **Rev No.** 0 **Discipline** Mechanical
Item : Air/HC Gas Driven Reciprocating Pump						Inspection Category : "B"	
Activity No.	**1. Inspection by ONGC / Certification Agency (CA)**						
		2. Inspection by ONGC / Third Party Inspection (TPI)					
			3. Inspection by Contractor / Contractor's Inspection Agency (IA)				
				4. Inspection by Vendor/ Sub Vendor			
					5. Certificates/compliance/Data/Information to be submitted by vendor for Review/ Approval		
						6. Stage of Inspection Involved	
						General & documents- For Review/Approval /Information	
1	-	-	W	H	-	Pre-inspection Meeting/Expiditing	
2	A	-	R	H	X	QA Plan/ Inspection & Test Plan	
3	R	-	R	H	X	Material Test Certificates, Corrosion Test Reports, Hazardous Area Classification and IP Certificates for E&I Items, Statutory Body Certificates (as applicable), Instrument caibration,Test Certificates of Bought out Items ((Pump Seal System, Pulsation Dampener, valves and other miscellanious items), Test Records and Compliance to other PS Requirements	
4	R	-	R	H	X	NDT Procedures, Heat Treatment Procedure, Surface Preparation and Protective Coating Procedure, WPS & PQR (As applicable)	
5	A	-	R	H	X	FAT Procedure & Hydrostatic Test Procedure	
						Inspection & Testing- For Witness/ Random Witness	
6	RW		W	H	X	Hydrostatic Testing	
7	W	-	W	H	X	Run Test, Performance Test on complete unit package (includung Pressure Relief Valve Check),NPSH Test, Noise Test , Vibration Test as applicable	
8	RW	-	W	H	X	Final Visual, Dimensional Check of Individual Components, Control panel functional test & Logic tests for the equipment package during FAT. Instruments as per approved Instrument data sheets.	
9	R	-	R	H	X	Test Result correlation for Speed, Viscosity & Specific Gravity Conditions (as applicable)	
10	RW	-	RW	H	X	Protective Coating (Final DFT and Visual Check)	
11	RW	-	RW	H	X	Final skid inspection including visual, dimensional check, completeness after packing (including spares), name plate varification, tagging, preservation and preparation for shipping	
12	Is	-	R	H	X	Final Documentation Review and Issue of Inspection Release Note	
						IMIR/GIIR at Yard/Offshore	

13	W	W	-		X	Verification of items as per IRN
14	W	W			X	IMIR/GIIR on the basis of IRN
***Refer Applicable Electrical IRT for Electrical Equipments/Items**						
LEGENDS & NOTES : Explained Separately						

FORMAT No.	Ref. PROCEDURE No.	ISSUE No.	REV. No.	REV. DATE:
ODS/SOF/004A	ODS/SOP/023	01	00	08.03.2016

ओएनजीसी ONGC	Offshore Design Section Engineering Services (ISO – 9001:2008)					INSPECTION REQUIREMENT TABLE	IRT No.	ODS/MECH/IRT/03/Codded Vessel
							Rev No.	0
							Discipline	Mechanical
ITEM : CODED VESSELS							INSPECTION CATEGORY.: 'A	
Activity	1. Inspection by ONGC / Certification Agency.(CA)							
		2. Inspection by ONGC / Third Party Inspection (TPI)						
			3.Inspection by EPC / EPC Inspection Agency (IA)					
				4. Inspection by Vendor/ Sub Vendor				
					5. Certificates/compliance/Data/Information to be submitted by vendor for Review/ Approval			
						6. Stage of Inspection Involved		
						General & documents- For Review/Approval /Information		
1	A	-	A	H	X	Inspection & Test plan		
2	A	-	R	H	X	NDT Procedures, Heat treatment procedure, Surface Preparation and protective coating procedure, Hydrotest procedure, Pneumatic test procedure, Pickling and Passivation procedure, Cladding procedure, WPS-PQR,WPQT		
3	R	-	R	H	X	Material test certificates and traceability records as applicable.		
		-			X	**Inspection & Testing- For Witness/ Random Witness**		
4	RW	-	W	H	X	Raw material identification. (Pressure parts)		
5	RW	-	R	H	X	Raw material identification. (Non pressure parts)		
5	RW	-	RW	H	X	Stage Inspection like fit up, welding & NDT etc. (As applicable)		
6	R	-	R	H	X	PWHT records & charts as applicable.		
7	RW	-	RW	H	X	NDE requirements (RT/UT/MPI/DPT - as applicable).(*100% Review of RT films)		
8	W	-	W	H	X	Surface visual (internal & external) inspection, dimension check and mechanical clearance.		
9	W	-	W	H	X	Final visual and dimensional inspection.		
10	RW	-	W	H	X	Hydrostatic pressure test.		
11	RW	-	R	H	X	Pneumatic test of R.F Pads (as applicable).		
12	RW	-	R	H	X	Pickling and Passivation of Corrosion resistant alloy.		
13	RW	-	RW	H	X	Surface preparation and protective coating (final DFT check and visual) as applicable.		
14	RW	-	RW	H	X	Inspection of lining on internal surface if applicable.		
15	RW	-	RW	H	X	Inspection of internals (fabrication of internals, fitment and alignment check), if any		
16	W	-	W	H	X	ASME code stamping along with applicable data reports (MDR).		
17	Is	-	R	H	X	Final documentation review and issue of inspection release note		

						IMIR/GIIR at Yard/Offshore
18	W	W	-		X	Verification of items as per IRN
19	W	W			X	IMIR/GIIR on the basis of IRN
***Refer Applicable Electrical IRT for Electrical Equipments/Items.**						
LEGENDS & NOTES : Explained Separately						

FORMAT No.	Ref. PROCEDURE No.	ISSUE No.	REV. No.	REV. DATE:
ODS/SOF/004A	ODS/SOP/023	01	00	08.03.2016

ओएनजीसी ONGC	Offshore Design Section Engineering Services (ISO – 9001:2008)			INSPECTION REQUIREMENT TABLE		IRT No.	ODS/MECH/IRT/04
						Rev No	0
						Discipline	Mechanical
Item : Instrument and Utility Gas System						Inspection Category : "B"	
Activity No.	1. Inspection by ONGC / Certification Agency (CA)						
		2. Inspection by ONGC / Third Party Inspection Agency (TPI)					
			3. Inspection by EPC / EPC's Inspection Agency (IA)				
				4. Inspection by Vendor/ Sub Vendor			
					5. Certificates/compliance/Data/Information to be submitted by vendor for Review/ Approval.		
						6. Stage of Inspection Involved	
						General & documents- For Review/Approval /Information	
1	A	-	R	H	X	Inspection and Test Plan	
2	A	-	R	H	X	FAT & SAT Procedure	
3	A	-	R	H	X	WPS, PQR and Repair Procedure (As applicable)	
4	R	-	R	H	X	Material Identification, Review of Material Test Certificates & Traceability Records. Additional Testing as per ONGC Specification, If any	
5	R	-	R	H	X	Statutory Body Certificates for Hazardous Area classification and Environmental Protection for Instrumentation Items	
						Pressure Vessel's, Associated Gas Cooler, Utility Gas Heater, Knock Out Drum, Double Pipe Heat Exchanger, Instrument Gas Receiver, Utility Gas Filter Separator, H2S & CO2 Absorber and all Interconnecting Piping). All requirements of ASME Inspector (as applicable) shall be met	
6	R	-	R	H	X	Material Identification and MTC Review for Major Components	
7	R	-	R	H	X	NDT (As applicable) (100% Review of RT Films by IA) and Heat Treatment Chart Review	
8	W	-	W	H	X	Hydrostatic Test / Pneumatic Test (As applicable)	
9	W	-	W	H	X	Final Visual & Dimensional Check and Mechanical Clearance	
						All Instrumentation Items	
10	R	-	R	H	X	Manufacturer's TC / Certificate of Conformity Review (As applicable) Calibration certificates for instruments. Instruments as per approved Instrument data sheets. Certificate of Conformity for IP/ NEMA Enclosure Class for Transmitters, Switches, Junction Boxes etc., (As applicable).	
11	R	-	R	H	X	Functional / Routine / Type / Calibration Test report for Gauges, Indicators, Flow, Instrument Transmitters etc. (As applicable) Control panel functional test report & Logic tests report for the equipment package during FAT	
						Structural Skid	
12	R	-	R	H	X	Review of MTCs for Major Structural Items	

13	RW	-	RW	H	X	Final Visual and Dimensional Inspection
						Inspection & Testing- For Witness/ Random Witness **Complete Skid assembly including Piping**
14	W	-	W	H	X	Verify / Check All Components as per P&ID
15	W	-	W	H	X	Check All Connecting Piping as per P&ID
16	W	-	W	H	X	Final Visual and Dimensional Check of Complete Assembly
17	W	-	W	H	X	Factory Acceptance Test (FAT)
18	RW	-	RW	H	X	Protective Coating (Final DFT and Visual Check)
19	Is	-	R	H	X	Final Documentation Review and Issue of Inspection Release Note
						IMIR/GIIR at Yard/Offshore
20	W	W	-	H	X	Verification of items as per IRN
21	W	W			X	IMIR/GIIR on the basis of IRN
22	W	W		H	X	SAT/Performance Test of Package in field (offshore platform) by the vendor

***Refer Applicable Electrical IRT for Electrical Equipments/Items.**

LEGENDS & NOTES : Explained Separately

FORMAT No.	Ref. PROCEDURE No.	ISSUE No.	REV. No.	REV. DATE:
ODS/SOF/004A	ODS/SOP/023	01	00	08.03.2016

ओएनजीसी ONGC	Offshore Design Section Engineering Services (ISO – 9001:2008)	INSPECTION REQUIREMENT TABLE	IRT No.	ODS/MECH/IRT/5
			Rev No.	0
			Discipline	Mechanical

ITEM : **Material Handling Equipment (chain Pulley Block)**	**Inspection Category : "B"**

Activity No.						
	1. Inspection by ONGC / Certification Agency (CA)					
		2. Inspection by ONGC / Third Party Inspection Agency (TPI)				
			3. Inspection by EPC Inspection Agency			
				4. Inspection by Vendor / Sub Vendor		
					5. Certificates/compliance/Data/Information to be submitted by vendor for Review/ Approval	
						6. Stage of Inspection Involved
						General & documents- For Review/Approval /Information
1	**A**	-	R	H	X	Inspection and Test Plan
2	**R**	-	R	H	X	Material Identification, Material Test Certificates and Traceability Records
3	**R**	-	R	H	X	Certificates of Type Tests and Examination as per BS 3243 & IS 3832
		-			X	**Inspection & Testing- For Witness/ Random Witness**
4	**RW**		**W**	**H**	**X**	**Load Testing as per Code and Specification**
5	**RW**	-	**RW**	H	X	NDT (As applicable)
6	**RW**	-	**RW**	H	X	Protective Coating (Final DFT & Visual Check) **as per ONGC Specification 2005**
7	**RW**	-	RW	H	X	Final Visual, Dimensional, Assembly Check
8	**Is**	-	R	H	X	Final Documentation Review and Issue of Inspection Release Note
						IMIR/GIIR at Yard/Offshore
9	W	W	-		X	Verification of items as per IRN
10	W	W			X	IMIR/GIIR on the basis of IRN

LEGENDS & NOTES : Explained Separately

FORMAT No.	Ref. PROCEDURE No.	ISSUE No.	REV. No.	REV. DATE:
ODS/SOF/004A	ODS/SOP/023	01	00	08.03.2016

ओएनजीसी ONGC	Offshore Design Section Engineering Services (ISO – 9001:2008)					INSPECTION REQUIREMENT TABLE	IRT No: ODS/MECH/IRT/6 Rev No.: 0 Discipline: Mechanical
Item : Shell & Tube Heat Exchanger						Inspection Category : "A"	
Activity No.	1. Inspection by ONGC / Certification Agency (CA)						
		2. Inspection by ONGC / Third Party Inspection Agency (TPI)					
			3. Inspection by EPC / EPC's Inspection Agency (IA)				
				4. Inspection by Vendor/ Sub Vendor			
					5. Certificates/compliance/Data/Information to be submitted by vendor for Review/ Approve		
						6. Stage of Inspection Involved	
						General & documents- For Review/Approval /Information	
1	A	-	R	H	X	Inspection and Test Plan	
2	A	-	R	H	X	Hydro Test Procedure, Pneumatic Test Procedure, FAT Procedure (As applicable)	
3	A	-	R	H	X	NDT Procedures, Heat Treatment Procedure, Surface Preparation and Protective Coating Procedure, Welding Procedure (As applicable)	
4	A	-	R	H	X	WPS / PQR/WPQ for heat exchanger	
5	R	-	R	H	X	Material Identification, Review of MTCs and Traceability Records (For Pressure Parts & Non Pressure Parts)	
						Inspection & Testing	
6	W	-	W	H	X	Mock-Up Test (Tube to Tube Sheet Joint)	
7	W	-	R	H	X	Non Destructive Testing (As applicable)	
8	W	-	W	H	X	Pickling and Passivation, as applicable	
9	W	-	W	H	X	Pneumatic Test, Hydro Static Test (As applicable)	
10	RW	-	W	H	X	Protective Coating (Final DFT and Visual Check)	
11	W	-	W	W	X	Tube bundle insertion	
12	RW	-	RW*	H	X	Inspection of Tube to Tube Sheet Joint (*100% DPT of Tube to Tube Sheet Joint, As applicable), Root and Final Pass DPT. Air Test (As applicable)	
13	R	-	R/W	H	X	Review of PWHT Charts and Hardness (As applicable)	
14	W		W	H	X	Heat Exchanger internal inspection before box up for cleanliness and completeness.	
15	W	-	W	H	X	Partition Plate Check after Welding	
16	W		R/W	W	X	Lifting arrangement like eye / trunion and DP test of lifting device attachment welds	
17	W		W	W	X	Halide test after Tube Expansion (if specified)	
18	W	-	W	H	X	Flushing and Drying of Tubes	

19	W	-	W	W	X	Final visual and Dimensional inspection
20	W		W	R	X	Code stamping (ASME or others as specified in project specification)
21	RW		RW	W	X	Surface preparation after grit blasting
22	R/W		R/W	W	X	Painting / coating inspection as per ONGC spec 2005
23	R		R	R	X	Certification by Authorized Inspector (if applicable)
24	Is	-	R	H	X	Final Documentation Review and Issue of Inspection Release Note
25	W		W	W	X	Final packing inspection for completeness during / after packing - tagging, preservation, packing.
						IMIR/GIIR at Yard/Offshore
13	W	W	-		X	Verification of items as per IRN
14	W	W			X	IMIR/GIIR on the basis of IRN

LEGENDS & NOTES : Explained Separately

FORMAT No.	Ref. PROCEDURE No.	ISSUE No.	REV. No.	REV. DATE:
ODS/SOF/004A	ODS/SOP/023	01	00	08.03.2016

ओएनजीसी ONGC	**Offshore Design Section Engineering Services (ISO – 9001:2008)**	**INSPECTION REQUIREMENT TABLE**	**IRT No** ODS/MECH/IRT/08
			Rev No 0
			Discipline Mechanical

Item : Primary & Secondary FG Skid				Inspection Category : "A"		
Activity No.	**1. Inspection by ONGC / Certification Agency (CA)**					
		2. Inspection by ONGC / Third Party Inspection (TPI)				
			3. Inspection by EPC / EPC Inspection Agency (IA)			
				4. Inspection by Vendor/ Sub Vendor		
					5. Certificates/compliance/Data/Information to be submitted by vendor for Review/ Approval	
						6. Stage of Inspection Involved
						General & documents- For Review/Approval /Information
1	A	-	R	H	x	Inspection and Test Plan
2	A	-	R	H	x	Hydrostatic Test Procedure, FAT Procedure (As applicable)
3	A	-	R	H	x	NDT Procedures, Heat Treatment Procedure, Surface Preparation and Protective Coating Procedure, Welding Procedure (As applicable)
4	R	-	R	H	x	Material Test Certificates, Corrosion Test / Additional Test Reports, Hazardous Area Classification and IP Certificates for E&I Items, Test Certificates for Bought Out Items, Test Records and Compliance to other PS Requirements (As applicable)
						Pressure Vessels
5	RW	-	RW	H	x	Raw Material Identification and MTC Review and Traceability Records
6	R	-	R	H	x	WPS,PQR,NDE and Painting Procedures
7	RW	-	RW	H	x	NDE Requirements (As applicable) (*100% RT Films Review by LIA) and PWHT Chart Review
8	W	-	W	H	x	Visual Inspection of Internal and External Surfaces and Dimensional Check
9	W	-	W	H	x	Hydrostatic Pressure Test (As applicable)
10	W	-	W	H	x	Pneumatic Test of RF Pads (As applicable)
11	R	-	R	H	x	Pickling and Passivation of Corrosion Resistance Alloy (CRA), as applicable
12	R	-	R	H	x	ASME Code Stamping along with Applicable Data Reports
13	RW	-	RW	H	x	Protective Coating (Final DFT and Visual Check)
14	Is	-	Is	H	x	Documentation Review and Issue of Inspection Release Note
						Structural Skid
15	R	-	R	H	x	Review of MTC's for All Structural Items
16	A	-	R	H	x	WPS & PQR
17	RW	-	RW	H	x	NDT, as applicable (*100% RT Film Review by LIA)
18	W	-	RW	H	x	Final Visual and Dimensional Check

						Instrumentation (Including Valves) Items
19	R	-	R	H	x	Material Test Certificates
20	R	-	R	H	x	NDE Requirements (As applicable)
21	W	-	W	H	x	Final Visual, Dimensional, Workmanship, Name Plate, Painting Inspection. Control panel functional test & Logic tests for the equipment package during FAT
22	RW	-	RW	H	x	Hydrostatic Testing, Seat-Leakage Test, Pneumatic Test (As applicable)
23	RW	-	RW	H	x	Functional, Calibration Checks for Instrumentation Items along with Accessories Calibration certificates for instruments, Certificate of Conformity for IP/ NEMA Enclosure Class for Transmitters, Switches, Junction Boxes etc., (As applicable). Instruments as per approved Instrument data sheets.
24	R	-	R	H	x	Test Report Review of Pressure Relief Valves, Enclosure-Degree of Protection Test Certificate
25	R	-	R	H	x	Hardness, Micro Test for Sour Service (As applicable)
26	RW	-	W	H	x	Safety Interlock Simulation Checks
						Piping
27	R	-	RW	H	x	Hydrostatic Test for Body and Seat of Valves, Pneumatic Test for Seat of Valves
28	R	-	RW	H	x	Hydrostatic Test for All Piping Spools
29	R	-	R	H	x	NDT, as applicable (*100% Review for RT Films by LIA)
30	R	-	R	H	x	Review of MTC's / Test Reports of All Piping Items
						Complete Skid Assembly
31	W	-	W	H	x	Verify / Check All Components as per P&ID
32	W	-	W	H	x	Check All Connecting Piping as per P&ID
33	W	-	W	H	x	Final Visual and Dimensional Check of Complete Assembly
34	RW	-	RW	H	x	Protective Coating (Final DFT and Visual Check)
35	Is	-	R	H	x	Final Documentation Review and Issue of Inspection Release Note
						IMIR/GIIR at Yard/Offshore
36	W	W	-		X	Verification of items as per IRN
37	W	W			X	IMIR/GIIR on the basis of IRN

***Refer Applicable Electrical IRT for Electrical Equipments/Items**

LEGENDS & NOTES : Explained Separately

FORMAT No.	Ref. PROCEDURE No.	ISSUE No.	REV. No.	REV. DATE:
ODS/SOF/004A	ODS/SOP/023	01	00	08.03.2016

ओएनजीसी ONGC	Offshore Design Section Engineering Services (ISO – 9001:2008)					INSPECTION REQUIREMENT TABLE	IRT No.	ODS/MECH/IRT/09
							Rev No	0
							Discipline	Mechanical
ITEM : HVAC System							Inspection Category : "A"	
Activity No.	1. Inspection by ONGC / Certification Agency (CA)							
		2. Inspection by ONGC / Third Party Inspection Agency (TPI)						
			3. Inspection by LTHE / LTHE's Inspection Agency (IA)					
				4. Inspection by Vendor / Sub Vendor				
					5. Certificates/compliance/Data/Information to be submitted by vendor for Review/ Approval			
						6. Stage of Inspection Involved		
1	A	-	R	H	X	Inspection and Test Plan		
2	A	-	R	H	X	FAT & SAT Procedure of complete Unit HVAC		
						HVAC Control Panel / Field Control Devices		
3	RW	-	RW	H	X	Visual, Dimensional, Name Plate, Cable Entry, Wiring, Earthing Check		
4	RW	-	RW	H	X	Wiring Check as per AFC Schematic Drawings		
5	RW	-	W	H	X	IR Test before and after HV Test		
6	RW	-	W	H	X	Operation check of PLC Control Logic by Simulating Actual Operating Conditions, as applicable including Redundancy Check and Functional Check Control panel functional test & Logic tests for the equipment package during FAT.		
7	R	-	R	H	X	Test Reports / Certificates for Major Components		
8	R	-	R	H	X	Certificate for Specified Enclosure Class of Panel. Certificate of Conformity for IP/ NEMA Enclosure Class for Transmitters, Switches, Junction Boxes etc., (As applicable). Calibration certificates for instruments, Instruments as per approved Instrument data sheets.		
9	RW	-	RW	H	X	Protective Coating check		
10	R	-	H	H	X	Documentation Review and Issue of Inspection Release Note		
						Chillers / Air Handling Unit / Exhaust Fan		
11	W	-	W	H	X	Final Visual & Dimensional check for Skid Assembly		
12	W	-	W	H	X	Mechanical Run Test for Chiller & AHU		
13	W	-	W	H	X	Leak / Pressure Test for Chiller (Condenser & Evaporator)		
14	R	-	R	H	X	Dynamic Balancing Records of Fan Blowers		
15	RW	-	RW	H	X	Air Filter Test		
16	R/W	-	R/W	H	X	Material Identification and Test Certificates Review		
17	RW	-	RW	H	X	Protective Coating Check		

18	Is	-	R	H	X	Documentation Review and Issue of Inspection Release Note
						Chilled Water Pump
19	RW	-	W	H	X	Visual Check of Major Components
20	RW	-	W	H	X	Hydrostatic Testing of Pump Casing
21	RW	-	W	H	X	Dynamic Balancing of Rotor
22	W	-	W	H	X	Performance Test at Rated RPM
23	RW	-	RW	H	X	NDT of Pump Components (As applicable)
24	R	-	R	H	X	Manufacturer's Test Certificates for Major Pump Components
25	R	-	R	H	X	Routine & Type Test Certificates for Motor
26	Is	-	Is	H	X	Documentation Review and Issue of Inspection Release Note
						Fire / Motorized Control / Back Draft / Pressure Relief Dampers, Duct Heaters
27	R	-	W	H	X	Final Visual & Dimensional Check
28	R	-	R	H	X	Material Identification & Test Certificates
29	Is	-	R	H	X	Documentation Review and Issue of Inspection Release Note
						Louvers / Diffusers / Grilles / Sound Attenuator / Disc Valves / Coalescer Filters / Dosing Pot / Expansion Tanks / Humidifiers / Pipes / Duct Insulation / Fosters / Canvas / Tapes
30	R	-	R	H	X	Material Identification & Test Certificates
31	W	-	W	H	X	Final Visual & Dimensional Check
32	R	-	R	H	X	Certificates for Specified Hazardous Area Class (As applicable)
33	Is	-	Is	H	X	Documentation Review and Issue of Inspection Release Note
						HVAC System (Complete)
34	Rw	-	W	H	X	Final Visual, Dimensional, Finishing of Complete HVAC System
35	W	-	W	H	X	FAT / SAT for the HVAC System
36	Is	-	Is	H	X	Final Documentation Review and Issue of Inspection Release Note
						IMIR/GIIR at Yard/Offshore
37	W	W	-		X	Verification of items as per IRN
38	W	W			X	IMIR/GIIR on the basis of IRN
39	W	W		H	X	SAT/Performance Test of Package in field (offshore platform) by the vendor

***Refer Applicable Electrical IRT for Electrical Equipments/Items.**

LEGENDS & NOTES : Explained Separately

FORMAT No.	Ref. PROCEDURE No.	ISSUE No.	REV. No.	REV. DATE:
ODS/SOF/004A	ODS/SOP/023	01	00	08.03.2016

ओएनजीसी ONGC	**Offshore Design Section Engineering Services (ISO – 9001:2008)**			**INSPECTION REQUIREMENT TABLE**			**IRT No**	ODS/MECH/IRT/10
							Rev No.	0
							Discipline	Mechanical
ITEM : Sewage Treatment Package						Inspection Category : "B"		
Activity No.	**1. Inspection by ONGC / Certification Agency (CA)**							
		2. Inspection by ONGC / Third Party Inspection (TPI)						
			3. Inspection by EPC / EPC Inspection Agency (IA)					
				4. Inspection by Vendor / Sub Vendor				
					5. Certificates/compliance/Data/Information to be submitted by vendor for Review/ Approval			
						6. Stage of Inspection Involved		
						General & documents- For Review/Approval /Information		
1	A	-	R	H	x	Inspection and Test Plan & FAT Procedure		
2	R	-	R	H	x	Material Identification, Material Test Certificates and Traceability Records		
3	A	-	R	H	x	WPS, PQR		
7	R	-	R	H	x	Test Certificates for Components, viz. Moulded Case Circuit Breaker (MCCB), Contactors etc.		
9	R	-	R	H	x	Type Test Reports for Enclosure Protection and Hazardous Area Classification		
						Inspection & Testing- For Witness/ Random Witness		
6	RW	-	RW	H	x	Check of Accessories and Spares		
	R/RW	-	RW	H	x	NDT Reports		
5	RW	-	W	H	x	Hydrostatic Testing / Water Fill Test (As applicable)		
8	RW	-	W	H	x	Check Functional, Simulation & Calibration Test for Instrumentation & Control Panels. Calibration certificates for instruments, Certificate of Conformity for IP/ NEMA Enclosure Class for Transmitters, Switches, Junction Boxes etc., (As applicable). Instruments as per approved Instrument data sheets. Control panel functional test & Logic tests for the equipment package during FAT		
10	W	-	W	H	x	Final Visual & Dimensional Check		
11	W	-	W	H	x	Final Performance Test for Whole Unit in Assembled Condition		
12	Rw	-	Rw	H	x	Protective Coating (Final DFT and Visual Check)		
13	Is	-	R	H	x	Final Documentation Review and Issue of Inspection Release Note		
						IMIR/GIIR at Yard/Offshore		
14	W	W	-		X	Verification of items as per IRN		
15	W	W			X	IMIR/GIIR on the basis of IRN		
***Refer Applicable Electrical IRT for Electrical Equipments/Items**								

LEGENDS & NOTES : Explained Separately				
FORMAT No.	Ref. PROCEDURE No.	ISSUE No.	REV. No.	REV. DATE:
ODS/SOF/004A	ODS/SOP/023	01	00	08.03.2016

ओएनजीसी ONGC	Offshore Design Section Engineering Services (ISO – 9001:2008)		INSPECTION REQUIREMENT TABLE			IRT No.	ODS/MECH/IRT/11
						Rev No.	0
						Discipline	Mechanical
Item : Utility Water Pump (Submergible)						Inspection Category : "A"	
Activity No.	1. Inspection by ONGC / Certification Agency (CA)						
		2. Inspection by ONGC / Third Party Inspection (TPI)					
			3. Inspection by Contractor / Contractor's Inspection Agency (IA)				
				4. Inspection by Vendor/ Sub Vendor			
					5.Certificates/compliance/Data/Information to be submitted by vendor for Review/ Approval		
						6. Stage of Inspection Involved	
						General & documents- For Review/Approval /Information	
1	-	-	W	H	-	Pre-inspection Meeting/Expediting	
2	A	-	R	H	X	QA Plan/ Inspection & Test Plan	
3	A	-	R	H	X	Tests/FAT Procedure including Hydrostatic & Pneumatic Test Procedure	
4	R	-	R	H	X	Material Test Certificates, Corrosion Test Reports, Hazardous Area Classification and IP Certificates for E&I Items, Test Certificates of Bought out Items, Test Records and Compliance to other PS Requirements	
5	R	-	R	H	X	NDT Procedures, Heat Treatment Procedure, Surface Preparation and Protective Coating Procedure, WPS & PQR (As applicable)	
6	A		R	H	X	FAT Procedure & Hydrostatic Test Procedure	
						Inspection & Testing-	
7	W		W	H	X	Stage Inspection eg. Fit Up, Wel, Hydrotest Etc. (as Applicable)	
						Pump	
8	R	-	R	H	X	Material Identification, MTC Review & Records of Pump Casing, Impeller, Shaft	
9	W	-	W	H	X	Rotor Static/ Dynamic Balancing	
10	W	-	W	H	X	Hydrostatic Test of Casing Discharge Header & Column Pipes	
11	R/RW	-	R/RW	H	X	NDT as applicable	
12	W	-	W	H	X	Mechanical Run Test	
13	W	-	W	H	X	Performance Test at Shut off, at Minimum Flow Rate, at Rated Flow and at 125% Capacity, NPSH Test (as applicable)	
14	W	-	W	H	X	Final Visual, Dimensional Check of Individual Components	
15	W		W			Strip Down test for checking any abnormal rubbing or wear	
						Instrumentation and Control	
16	W	-	W	H	X	Final Visual, Dimensional Check	

17	R	-	R	H	X	Material Test Certificate, Records, Type Test Reports, Calibration certificates for instruments, Certificate of Conformity for IP/ NEMA Enclosure Class for Transmitters, Switches, Junction Boxes etc., (As applicable). Instruments as per approved Instrument data sheets.
18	RW	-	RW	H	X	Check Individual Components, Calibration Check, Functional Check and Operational Check. Control panel functional test & Logic tests for the equipment package during FAT
						Complete Skid Assembly (Column pipe, Pump etc)
19	R	-	R	H	X	Check/verify of items/equipment, review all applicable documents i.e. material test certificates, conformance/compliance certificates, test reports etc. for major brought out components/items
20	R/RW		R/RW	H	X	NDE (RT, UT, MPI, DPI) Report /test as applicable
21	R		R	H	X	Heat treatment report as applicable
22	R	-	R	H	X	Hyrotest report as applicable
24	RW	-	RW	H	X	Protective Coating (Final DFT and Visual Check)
24	W	-	W	H	X	Preservation, Packing and preparation for shipping
25	Is	-	R	H	X	Final Documentation Review and Issue of Inspection Release Note
						IMIR/GIIR at Yard/Offshore
26	W	W			X	Verification of items as per IRN
27	W	W	-		X	IMIR/GIIR on the basis of IRN

***Refer Applicable Electrical IRT for Electrical Equipments/Items**

LEGENDS & NOTES : Explained Separately

FORMAT No.	Ref. PROCEDURE No.	ISSUE No.	REV. No.	REV. DATE:
ODS/SOF/004A	ODS/SOP/023	01	00	08.03.2016

ओएनजीसी ONGC	Offshore Design Section Engineering Services (ISO – 9001:2008)			INSPECTION REQUIREMENT TABLE		IRT No	ODS/MECH/IRT/12
						Rev N0.	0
						Discipline	Mechanical
Item : Rotary Gear Pump					Inspection Category : "B"		
Activity No.	1. Inspection by ONGC / Certification Agency (CA)						
		2. Inspection by ONGC / Third Party Inspection (TPI)					
			3. Inspection by Contractor / Contractor's Inspection Agency (IA)				
				4. Inspection by Vendor/ Sub Vendor			
					5. Certificates/compliance/Data/Information to be submitted by vendor for Review/ Approval		
						6. Stage of Inspection Involved	
						General & documents- For Review/Approval /Information	
1	-	-	W	H	-	Pre-inspection Meeting/Expediting	
2	A	-	R	H	X	QA Plan/ Inspection & Test Plan	
3	R	-	R	H	X	Material Test Certificates, Corrosion Test Reports, Hazardous Area Classification and IP Certificates for E&I Items, Statutory Body Certificates (as applicable), Instrument caibration,Test Certificates of Bought out Items , Test Records and Compliance to other PS Requirements	
4	R	-	R	H	X	NDT Procedures, Heat Treatment Procedure, Surface Preparation and Protective Coating Procedure, WPS & PQR (As applicable)	
5	A	-	R	H	X	FAT Procedure & Hydrostatic Test Procedure	
						Inspection & Testing- For Witness/ Random Witness	
6	W	-	W	H	X	Run Test, Performance Test on complete unit package (including Pressure Relief Valve Check), NPSH Test, Noise Test , Vibration Test as applicable	
7	W	-	W	H	X	Final Visual, Dimensional Check of Individual Components	
8	R	-	R	H	X	Test Result Report for correlation for Speed, Viscosity & Specific Gravity Conditions (as applicable)	
9	RW	-	RW	H	X	Protective Coating (Final DFT and Visual Check)	
10	W	-	W	H	X	Final inspection including visual, dimensional check, completeness after packing (including spares), name plate varification, tagging, preservation and preparation for shipping	
11	Is	-	R	H	X	Final Documentation Review and Issue of Inspection Release Note	
						IMIR/GIIR at Yard/Offshore	
12	W	W	-		X	Verification of items as per IRN	
13	W	W			X	IMIR/GIIR on the basis of IRN	

***Refer Applicable Electrical IRT for Electrical Equipments/Items**				
LEGENDS & NOTES : Explained Separately				
FORMAT No.	Ref. PROCEDURE No.	ISSUE No.	REV. No.	REV. DATE:
ODS/SOF/004A	ODS/SOP/023	01	00	08.03.2016

ओएनजीसी ONGC	Offshore Design Section Engineering Services (ISO – 9001:2008)	INSPECTION REQUIREMENT TABLE			IRT No.	ODS/MECH/IRT/13
					Rev No	0
					Discipline	Mechanical

Item : Fire Water Pump					Inspection Category : "A"	
Activity No.	1. Inspection by ONGC / Certification Agency (CA)					
		2. Inspection by ONGC / Third Party Inspection Agency (TPI)				
			3. Inspection by Contractor / Contractor's Inspection Agency (IA)			
				4. Inspection by Vendor/ Sub Vendor		
					5.Certificates/compliance/Data/Information to be submitted by vendor for Review/ Approval	
						6. Stage of Inspection Involved
						General & documents- For Review/Approval /Information
	-	-	W	H	-	Pre-inspection Meeting/Expediting
1	A	-	R	H	X	QA Plan/ Inspection & Test Plan
2	A	-	R	H	X	FAT & SAT Procedure, Hydrostatic & Pneumatic Test Procedure
3	R	-	R	H	X	Material Test Certificates, Corrosion Test Reports, Hazardous Area Classification and IP Certificates for E&I Items, Test Certificates of Bought out Items, Test Records and Compliance to other PS Requirements
4	R	-	R	H	X	NDT Procedures, Heat Treatment Procedure, Surface Preparation and Protective Coating Procedure, WPS & PQR (As applicable)
						Vertical Turbine Pump
5	R	-	R	H	X	Material Identification, MTC Review & Records of Pump Casing, Impeller, Shaft
6	R	-	R	H	X	Impeller Dynamic Balancing Report
7	RW	-	W	H	X	Hydrostatic Test of Casing Discharge Header & Column Pipes
8	R/RW	-	R/RW	H	X	NDT Report/test as Applicable
9	W	-	W	H	X	Mechanical Run Test
10	W	-	W	H	X	NPSH Test as applicable
11	W	-	W	H	X	Noise & Vibration Test
12	W	-	W	H	X	Performance Test at Shut off, at Minimum Flow Rate, at Rated Flow and at 125% Capacity
13	W	-	W	H	X	Strip Down Test for Bowl Assembly
14	W	-	W	H	X	Final Visual, Dimensional Check of Individual Components
						Skid Structure
15	R	-	R	H		Material Test Certificate and identification & Records
16	R	-	R	H		Verification of availability of WPS, PQR, WQR (as applicable) and NDT Reports

17	RW	-	RW	H		Protective coating as per Specification
						Diesel / Day Tank
18	R	-	R	H	X	Material Identification, Material Test Certificates & Records
19	R	-	R	H	X	Verification of availability of WPS, PQR, WQR (as applicable) and NDT
20	RW	-	RW	H	X	Protective coating as per Specification
21	W	-	W	H	X	Final Visual and Dimensional Check
22	RW	-	RW	H	X	Leak Test by Water Filling
						Diesel Engine
23	W	-	W	H	X	Visual, Dimensional & Alignment Check
24	RW	-	RW	H	X	Hydrostatic Test for all Components - Cooling Water, Jacket, Cylinder Block, Radiator, etc.
25	W	-	W	H	X	Performance Test
26	W		W	H	X	Load Test , 10% overload test for 1 hour
27	W	-	W	H	X	Check for Emergency Shut Down
28	W	-	W	H	X	Noise & Vibration Level Check
						Gear Drive
29	R	-	R	H	X	Material Test Certificate & Records
30	W	-	W	H	X	Check Final Visual, Dimensional Assembly
31	W	-	W	H	X	Hardness Check, Contact Test
32	W	-	W	H	X	Full Load & Full Speed Test
						Instrumentation and Control
33	W	-	W	H	X	Final Visual, Dimensional Check.
34	R	-	R	H	X	Material Test Certificate, Records, Type Test Reports, Certificate of Conformity for IP/ NEMA Enclosure Class for Transmitters, Switches, Junction Boxes etc., (As applicable).
35	R/RW	-	R/RW	H	X	Check Individual Components, Calibration Check, Functional Check and Operational Check, Calibration certificates for instruments. Instruments as per approved Instrument data sheets
36	W	-	W	H	X	Engine Mounting and Alignment Check
						Complete Skid Assembly (Pump, Gear Drive, Engine)
37	W	-	W	H	X	Mechanical Run Test & Factory Acceptance Test (String Test), Control panel functional test & Logic tests for the equipment package during FAT.
38	W	-	W	H	X	Noise & Vibration Tests
39	RW	-	RW	H	X	Protective Coating (Final DFT and Visual Check)
40	W	-	W	H	X	Preservation, Packing and preparation for shipping
41	Is	-	R	H	X	Final Documentation Review and Issue of Inspection Release Note

IMIR/GIIR at Yard/Offshore						
42	W	W	-		X	Verification of items as per IRN
43	W	W			X	IMIR/GIIR on the basis of IRN
44	W	W		H	X	SAT/Performance Test of Package in field (offshore platform) by the vendor.
***Refer Applicable Electrical IRT for Electrical Equipments/Items.**						
LEGENDS & NOTES : Explained Separately						

FORMAT No.	Ref. PROCEDURE No.	ISSUE No.	REV. No.	REV. DATE:
ODS/SOF/004A	ODS/SOP/023	01	00	08.03.2016

ओएनजीसी ONGC	**Offshore Design Section Engineering Services (ISO – 9001:2008)**	**INSPECTION REQUIREMENT TABLE**	**IRT No** MR/ODS/IRT/14 **Rev No.** 0 **Discipline** Mechanical

Item : Instrument and Utility Air System | **Inspection Category : "A"**

Activity No.	1. Inspection by ONGC / Certification Agency (CA)	2. Inspection by ONGC / Third Party Inspection Agency (TPI)	3. Inspection by EPC's Inspection Agency (IA)	4. Inspection by Vendor/ Sub Vendor	5. Certificates/compliance/Data/Information to be submitted by vendor for Review/ Approval	6. Stage of Inspection Involved
1	A	-	R	H	X	Inspection and Test Plan
2	A	-	R	H	X	FAT & SAT Procedure
3	A	-	R	H	X	WPS, PQR and Repair Procedure (As applicable) & NDT Proc.
4	R	-	R	H	X	Material Identification, Review of Material Test Certificates & Traceability Records. Additional Testing as per ONGC Specification, If any
5	R	-	R	H	X	Statutory Body Certificates for Hazardous Area classification and Environmental Protection for Instrumentation Items
						Screw Compressor
6	R	-	R	H	X	Material Identification and MTC Review for Major Compressor Components
7	W	-	W	H	X	Hydrostatic Test (As applicable)
8	W	-	W	H	X	Performance Test of the Compressor including Load Test as per Approved Procedure
9	W	-	W	H	X	Noise and Vibration Level Check
10	RW	-	RW	H	X	Protective Coating Inspection (Final DFT and Visual Check)
						Pressure Vessels (Inter stage Receivers, Coolers, Air Pre/After Filters, Air Dryer)
11	R	-	R	H	X	Material Identification for Pressure Parts and Review of Test Certificates
12	R	-	R	H	X	NDT (As applicable) (*100% Review of RT Films by LIA) and Heat Treatment Chart Review
13	W	-	W	H	X	Final Visual & Dimensional Check and Mechanical Clearance
14	W	-	W	H	X	Hydro Test / Pneumatic Test (As applicable)
15	RW	-	RW	H	X	Protective Coating (Final DFT and Visual Check)
						Fabrication of Spools (Connecting Piping)
16	R	-	R	H	X	Material Identification, Review of Material Test Certificates and Records
17	R	-	R	H	X	NDT (As applicable) (*100% Review of RT Films by LIA)

18	RW	-	RW	H	X	Final Dimensional Inspection and Mechanical Clearance
19	RW	-	RW	H	X	Hydrostatic Test
20	RW	-	Rw	H	X	Protective Coating (Final DFT and Visual Check)
						All Instrumentation Items
21	R	-	R	H	X	Manufacturer's TC / Certificate of Conformity Review (As applicable). Calibration certificates for instruments. Instruments as per approved Instrument data sheets. Certificate of Conformity for IP/ NEMA Enclosure Class for Transmitters, Switches, Junction Boxes etc., (As applicable).
24	RW	-	RW	H	X	Functional / Routine / Type / Calibration Test for Gauges, Indicators, Flow, Instrument Transmitters etc. (As applicable) Control panel functional test & Logic tests for the equipment package during FAT
						Structural Skid
25	R	-	R	H	X	Review of MTCs for Major Structural Items
26	RW	-	RW	H	X	Final Visual and Dimensional Inspection
						Complete Skid Assembly
27	W	-	W	H	X	Verify / Check All Components as per P&ID
28	W	-	W	H	X	Check All Connecting Piping as per P&ID
29	W	-	W	H	X	Final Visual and Dimensional Check of Complete Assembly
30	Rw	-	RW	H	X	Protective Coating (Final DFT and Visual Check)
31	Is	-	R	H	X	Final Documentation Review and Issue of Inspection Release Note
						IMIR/GIIR at Yard/Offshore
32	W	W	-		X	Verification of items as per IRN
33	W	W			X	IMIR/GIIR on the basis of IRN
31	Is	-	R	H	X	SAT/Performance Test of Package in field (offshore platform) by the vendor

***Refer Applicable Electrical IRT for Electrical Equipments/Items**

LEGENDS & NOTES : Explained Separately

FORMAT No.	Ref. PROCEDURE No.	ISSUE No.	REV. No.	REV. DATE:
ODS/SOF/004A	ODS/SOP/023	01	00	08.03.2016

ओएनजीसी ONGC	Offshore Design Section Engineering Services (ISO – 9001:2008)				INSPECTION REQUIREMENT TABLE		IRT No.	ODS/MECH/IRT/14A
							Rev No	0
							Discipline	Mechanical
ITEM : Starting Air Compressor Package						Inspection Category : "A"		
Activity No.	1. Inspection by ONGC / Certification Agency (CA)							
		2. Inspection by ONGC / Third Party Inspection Agency (TPI)						
			3..Inspection by EPC / EPC's Inspection Agency (IA)					
				4. Inspection by Vendor/ Sub Vendor				
					5. Certificates/compliance/Data/Information to be submitted by vendor for Review/ Approve			
						Stage of Inspection Involved		
						General & documents- For Review/Approval /Information		
1	A	-	R	H	X	Inspection and Test Plan		
2	A	-	R	H	X	FAT /& SAT Procedure		
3	A	-	R	H	X	WPS, PQR and Repair Procedure (As applicable) & NDT Proc		
4	R	-	R	H	X	Material Identification, Material Test Certificates / Check Test for Chemical, Mechanical and Corrosion Test as per approved PS and NACE MR-0175		
5	R	-	R	H	X	Statutory Body Certificates for Hazardous Area Classification and Environmental Protection for Electrical / Instrumentation Items		
						Reciprocating Compressor		
6	R	-	R	H	X	Manufacturer's Test Certificates for Major Compressor Components listed in ITP		
7	RW	-	RW	H	X	Material Identification for Compressor Components as listed in ITP		
8	R	-	W	H	X	Water Cooler Hydrostatic Test		
9	W	-	W	H	X	Performance Test of the Compressor		
10	W	-	W	H	X	Noise and Vibration Level Check		
11	RW	-	RW	H	X	Protective Coating Inspection (Final DFT and Visual Check)		
12	Is	-	R	H	X	Final Documentation Review & Issue of Inspection Release Note		
						Diesel / Day Tank (As applicable)		
13	R		R	H	X	Material Identification, Material Test Certificates and Records		
14	W	-	W	H	X	Final Visual and Dimensional Check		
15	W	-	W	H	X	Leak Test by Water Filling		
						Diesel Engine		
16	R	-	R	H	X	Manufacturer's Test Certificates / Operational Test Certificate		
17	W	-	W	H	X	Final Visual and Dimensional Check		

						All Instrumentation Items
18	R	-	R	H	X	Manufacturer's TC / Certificate of Conformity Review (As applicable) Calibration certificates for instruments. Certificate of Conformity for IP/ NEMA Enclosure Class for Transmitters, Switches, Junction Boxes etc., (As applicable).
19	RW	-	RW	H	X	Functional / Routine / Type / Calibration Test for Gauges, Indicators, Flow, Instrument Transmitters etc. (As applicable) Control panel functional test & Logic tests for the equipment package during FAT
						Structural Skid
20	R	-	R	H	X	Review of MTCs for Major Structural Items
21	W	-	W	H	X	Final Visual and Dimensional Inspection
						Complete Skid Assembly
22	W	-	W	H	X	Verify / Check all Components as per P&ID
23	W	-	W	H	X	Check all Connecting Piping as per P&ID
24	W	-	W	H	X	Final Visual and Dimensional Check of the Complete Assembly
25	RW	-	RW	H	X	Protective Coating (Final DFT and Visual Check)
26	Is	-	R	H	X	Final Documentation Review & Issue of Inspection Release Note (IRN)
						IMIR/GIIR at Yard/Offshore
27	W	W	-		X	Verification of items as per IRN
28	W	W			X	IMIR/GIIR on the basis of IRN
29	W	W		H	X	SAT/Performance Test of Package in field (offshore platform) by the vendor.

***Refer Applicable Electrical IRT for Electrical Equipments/Items.**

LEGENDS & NOTES : Explained Separately

FORMAT No.	Ref. PROCEDURE No.	ISSUE No.	REV. No.	REV. DATE:
ODS/SOF/004A	ODS/SOP/023	01	00	08.03.2016

ओएनजीसी ONGC	Offshore Design Section Engineering Services (ISO – 9001:2008)	INSPECTION REQUIREMENT TABLE	IRT No. ODS/MECH/IRT/14-B Rev No. 0 Discipline Mechanical

Item: AIR DRYER | **Inspection Category : B**

ACTIVITY No	1. Inspection by ONGC /Certification Agency CA.	2. Inspection by ONGC/Third Party Inspection (TPI)	3. Inspection by EPC/ EPC Inspection Agency (IA)	4. Inspection by Vendor	5. Certificates/compliance/Data/Information to be submitted by vendor for Review/ Approval.	6. STAGES OF INSPECTION INVOLVED.
1	I	--	H	H	----	**Pre-Inspection Meeting (as required)**
2	A	--	R	H	X	Approval of QA Plan / Inspection and test plan (ITP) of vendor
3	A	-	R	H	X	FAT Procedure of complete Unit
						Before start of Fabrication
4	A		R	H	X	Welding book and NDT scheme
5	A	--	R	H	X	Weldling , PQR,WPS
						Vessel/Filters/Absorbers/Moisture seperators ect
6	R	--	R	W	X	Raw Material Identification and Marking checks (MTC)
7	R	--	R	W	X	Weld Joint fit up inspection
8	W	--	W	W	X	Visual and Dimensional Inspection
9	R	--	R	R	X	Post Weld Heat treatment charts/ records (as applicable)
10	R	--	R	R	X	NDE (RT, UT, MPI, DPT), PMI and Hardness of weld joints as per spec.
11	R	--	R	W	X	Pneumatic test of RF Pads (if applicable)
12	W	--	W	H	X	Hydro Test and drying of vessel
13	W	--	W	R	X	Code Stamping (ASME or others as specified in PS)
						Structural Steel fabrication
14	R	--	R	W		Welding Book
15	W		W	W		Visual and Dimension
						Piping
16	R	-	R	H	X	WPS and PQR for welding and NDT as per ONGC spec. (wherever applicable/ required)
17	RW	--	RW	W	X	Weld Visual inspection and Dimensional checks
18	W	--	W	W	X	Pipe Spool Hydro Test
19	R	--	R	W		NDT of Weld as per Spec.
20	RW	--	RW	W	X	Hydro test
						Instrumentation Items

21	R	--	R	R	X	Rating and Area classification of all components as per the Data Sheet
22	W	--	W	W	X	Functional Test of control/Instrumentation items. Calibration certificates for instruments. Instruments as per approved Instrument data sheets. Certificate of Conformity for IP/ NEMA Enclosure Class for Transmitters, Switches, Junction Boxes etc., (As applicable). Control panel functional test & Logic tests for the equipment package during FAT
						SKID Assembly
23	W	----	W	W	X	Check against Approved P&ID
24	W	----	W	W	X	Visual and Dimension Inspection
25	W	----	W	W	X	Functional test
						Surface preparation & Painting / Coating and Insulation
26	R	----	R	W	X	Surface preparation of vessel and structure after Blasting
27	RW	----	RW	W	X	Painting / coating inspection as per ONGC spec.
28	W	----	W	H	X	Vessel internal inspection before Box-up for cleanliness and completeness
29	W	----	W	W	X	Insulation (As Applicable) as per ONGC spec.
						Other requirements
30	R	----	R	R	X	Review of final documentation to comply with specification requirements
31	R	----	R	W		Review MTC and Testing reports of Bought out items
32	R	----	R	W	X	Final Package Inspection for completeness during / After packaging-tagging, preservation, packing including spares
33	R	----	R	R	X	Certification of vessel by Authorised inspector
34	Is	----	R	H	X	Release Note
						IMIR/GIIR at Yard/Offshore
35	W	W	-		X	Verification of items as per IRN
36	W	W			X	IMIR/GIIR on the basis of IRN

***Refer Applicable Electrical IRT for Electrical Equipments/Items.**

LEGENDS & NOTES : Explained Separately

FORMAT No.	Ref. PROCEDURE No.	ISSUE No.	REV. No.	REV. DATE:
ODS/SOF/004A	ODS/SOP/023	01	00	08.03.2016

ओएनजीसी ONGC	Offshore Design Section Engineering Services (ISO – 9001:2008)			INSPECTION REQUIREMENT TABLE		IRT No	ODS/MECH/IRT/15
						Rev No.	0
						discipline	Mechanical
Item : **Sea Water Lift Pump**						**Inspection Category : "A"**	
Activity No.	**1. Inspection by ONGC / Certification Agency (CA)**						
		2. Inspection by ONGC / Third Party Inspection (TPI)					
			3. Inspection by Contractor / Contractor's Inspection Agency (IA)				
				4. Inspection by Vendor/ Sub Vendor			
					5. Certificates/compliance/Data/Information to be submitted by vendor for Review/ Approval		
						6. Stage of Inspection Involved	
						General	
1	W	-	W	H	-	Pre-inspection Meeting/Expediting	
2	A	-	R	H	X	QA Plan/ Inspection & Test Plan	
3	A	-	R	H	X	FAT Procedure, Hydrostatic & Pneumatic Test Procedure	
4	R	-	R	H	X	Material Test Certificates, Corrosion Test Reports, Hazardous Area Classification and IP Certificates for E&I Items, Test Certificates of Bought out Items, Test Records and Compliance to other PS Requirements	
5	R	-	R	H	X	NDT Procedures, Heat Treatment Procedure, Surface Preparation and Protective Coating Procedure, WPS & PQR (As applicable)	
6	W		W	H		Stage inspection e.g. Fit Up, Weld, Hydro test etc. (as applicable)	
						Pump	
7	R/W	-	R/W	H	X	Material Identification, MTC Review & Records of Pump Casing, Impeller, Shaft	
8	W	-	W	H	X	Impeller Dynamic Balancing	
9	W	-	W	H	X	Hydrostatic Test of Casing Discharge Header & Column Pipes	
10	R	-	R	H	X	NDT as Applicable	
11	W	-	W	H	X	Mechanical Run Test	
12	W	-	W	H	X	Performance Test at Shut off, at Minimum Flow Rate, at Rated Flow and at 125% Capacity, NPSH Test (One identical Pump), Noise & Vibration Test	
13	W	-	W	H	X	Strip Down Test for Bowl Assembly	
14	W	-	W	H	X	Final Visual, Dimensional Check of Individual Components	
						Instrumentation and Control	
15	RW	-	RW	H	X	Final Visual, Dimensional Check, Calibration certificates for instruments., Certificate of Conformity for IP/ NEMA Enclosure Class for Transmitters, Switches, Junction Boxes etc., (As applicable). Instruments as per approved Instrument data sheets.	
16	RW	-	RW	H	X	Material Test Certificate, Records, Type Test Reports, Control panel functional test & Logic tests for the equipment package during FAT	

17	RW	-	RW	H	X	Check Individual Components, Calibration Check, Functional Check and Operational Check
18	W		W	H	X	Mounting and Alignment Check
						Complete Skid Assembly (with Column pipe, Pump etc.
19	R	-	R	H	X	Check/verify of items/equipment, review all applicable documents i.e. material test certificates, conformance/compliance certificates, test reports etc. for major brought out components/items
20	R		R	H	X	NDE (RT, UT, MPI, DPI) as applicable
21	R		R	H	X	Heat treatment report as applicable
22	RW	-	RW	H	X	Hydro test as applicable
23	RW	-	RW	H	X	Painting verification and inspection
24	W	-	W	H	X	Factory Acceptance Test (String Test)
25	W	-	W	H	X	Noise & Vibration Tests
26	RW	-	RW	H	X	Protective Coating (Final DFT and Visual Check)
27	RW	-	W	H	X	Preservation, Packing and preparation for shipping
28	Is	-	R	H	X	Final Documentation Review and Issue of Inspection Release Note
IMIR/GIIR at Yard/Offshore						
29	W	W	-		X	Verification of items as per IRN
30	W	W			X	IMIR/GIIR on the basis of IRN
***Refer Applicable Electrical IRT for Electrical Equipments/Items**						
LEGENDS & NOTES : Explained Separately						

FORMAT No.	Ref. PROCEDURE No.	ISSUE No.	REV. No.	REV. DATE:
ODS/SOF/004A	ODS/SOP/023	01	00	08.03.2016

ओएनजीसी ONGC	Offshore Design Section Engineering Services (ISO – 9001:2008)			INSPECTION REQUIREMENT TABLE			IRT No.	ODS/MECH/IRT/16
							Rev. No.	0
							Discipline	Mechanical
ITEM : PRODUCED WATER CONDITIONING SYSTEM							INSPECTION CATEGORY.: 'A'	
Activity	1. Inspection by ONGC / Certification Agency.(CA)							
		2. Inspection by ONGC / Third Party Inspection Agency (TPI)						
			3.Inspection by EPC Inspection Agency/EPC's Inspection Agency (IA)					
				4. Inspection by Vendor/ Sub Vendor				
					5. Certificates/compliance/Data/Information to be submitted by vendor for Review/ Approval			
						6. Stage of Inspection Involved		
						General		
1	A	-	A	H	X	Inspection & Test plan		
2	A	-	R	H	X	WPS/PQR, WPQR, Heat Treatment, Hydrostatic, Surface Preparation, NDT & FAT Procedure (As applicable)		
3	R	-	R	H	X	Material certification of Major / Wetted / Pressure parts confirming to Code EN 10204 3.1 / ONGC Spec./ NACE MR-01-75 requirement. (as applicable)		
A. HYDROCYCLONE & DEGASSING DRUM								
4	W	-	W	H	X	Check visual and dimensional of component.		
5	W	-	W	H	X	Stage wise Inspection like (Fit up , weld visual)		
6	W	-	W	H	X	NDE requirements (RT/UT/MPI/DPT) (100% Review of RT film if applicable)		
7	R	-	R	H	X	Review of PWHT chart (if applicable)		
8	W	-	W	H	X	Inspection of lining as per specification requirement (If applicable)		
9	W	-	W	H	X	Dimensional check and mechanical clearance		
10	W	-	W	H	X	Check vessel internals (As applicable)		
11	W	-	W	H	X	Hydrostatic Test		
12	W	-	W	H	X	Pneumatic test of R.F Pads (As applicable).		
13	W	-	W	H	X	Check final visual & Dimensional of vessel, internals etc. (As applicable)		
14	W	-	W	H	X	Verification of ASME Code stamping (As applicable)		
15	RW	-	RW	H	X	Surface preparation and protective coating as per ONGC spec 2005 Rev 4		
16	Is	-	R	H	X	Issue of inspection release note and Final documentation		
B. CHEMICAL STORAGE TANK								
17	W	-	W	H	X	NDE requirements (RT/UT/MPI/DPT) (100% Review of RT film if applicable)		
18	RW	-	RW	H	X	Hydrostatic Testing		
19	W	-	W	H	X	Final Visual, dimensional inspection and mechanical clearance		
C. SPOOLS (CONNECTING PIPING) , FLOTATION CELL RECYCLE & CHEMICAL INJECTION PUMPS								
20	R	-	R	H	X	NDE requirements (RT/UT/MPI/DPT) (100% Review of RT film if applicable)		

21	RW	-	RW	H	X	Hydrostatic Testing
22	RW	-	RW	H	X	Run test/Performance test/Alignment test records as applicable for pumps. Instruments as per approved Instrument data sheets.
23	W	-	W	H	X	Final Visual, dimensional inspection and mechanical clearance
D. INSTRUMENTATION						
24	RW	-	RW	H	X	Functional / Routine / Type / Range / Calibration test for Gauges, Indicators, Transmitters and other instruments
25	R	-	R	H	X	Statutory body certificates for Hazardous Area classification and Environmental protection for Instrumentation Items as applicable/approved PS
D.STRUCTURAL SKID						
26	R	-	R	H	X	Material certification of Major components.
27	R	-	R	H	X	NDT as applicable
28	W	-	W	H	X	Check final Visual & Dimensional
E. ASSEMBLED SKID						
29	W	-	W	H	X	Factory Acceptance Testing : Verify / Check all components as per Approved Drawing, Data Sheet & P&ID
30	W	-	W	H	X	Check final Visual & Dimensions of complete assembly. Control panel functional test & Logic tests for the equipment package during FAT.
31	RW	-	RW	H	X	Surface preparation and protective coating as per ONGC spec 2005 Rev 4 (Final DFT)
32	Is	-	R	H	X	Inspection release note
IMR/GIIR at Yard/Offshore						
33	W	W	-		X	Verification of items as per IRN
34	W	W			X	IMIR/GIIR on the basis of IRN
***Refer Applicable Electrical IRT for Electrical Equipments/Items**.						
LEGENDS & NOTES : Explained Separately						

FORMAT No.	Ref. PROCEDURE No.	ISSUE No.	REV. No.	REV. DATE:
ODS/SOF/004A	ODS/SOP/023	01	00	08.03.2016

ओएनजीसी ONGC	**Offshore Design Section Engineering Services (ISO – 9001:2008)**					**INSPECTION REQUIREMENT TABLE**	**IRT No.**	**ODS/MECH/IRT/17**
							Rev No	**0**
							Discipline	**Mechanical**
Item : **Emergency Generator**							Inspection Category : "A"	
Activity No.	**1. Inspection by ONGC / Certification Agency (CA)**							
		2. Inspection by ONGC / Third Party Inspection Agency (TPI)						
			3. Inspection by EPC Inspection Agency (IA)					
				4. Inspection by Vendor / Sub Vendor				
					5.Certificates/compliance/Data/Information to be submitted by vendor for Review/ Approval			
					6. Stage of Inspection Involved			
						General		
1	A	-	R	H	X	Inspection and Test Plan		
2	A	-	R	H	X	FAT Procedure of complete Unit		
3	R	-	R	H	X	Material Identification, Material Test Certificates and Records		
4	A	-	R	H	X	Hydro Test Procedure, Pneumatic Test Procedure (As applicable)		
5	R	-	R	H	X	NDT Procedures, Heat Treatment Procedure, Surface Preparation and Protective Coating Procedure, Welding Procedure, String Test Procedure (As applicable)		
6	R	-	R	H	X	Statutory Body Certificates for Hazardous Area Classification and Environmental Protection for Instrumentation Items		
						Inspection & Testing		
						Diesel Engine		
7	R	-	R	H	X	Material Test Certificates for Major Components		
8	W	-	W	H	X	Performance Test of Diesel Engine including all safety features and overload test.		
						Instruments / Controls and Control Panels		
9	R	-	R	H	X	Review of Certificates for Transmitters		
10	RW	-	RW	H	X	Calibration / Functional Tests		
11	RW	-	Rw	H	X	Final Visual and Dimensional Check of Control Panels		
12	R	-	R	H	X	Review of Certificates for Enclosure Protection and Transmitters		
13	RW	-	RW	H	X	HV & IR Tests		
14	W	-	W	H	X	Functional Tests		
15	RW	-	RW	H	X	Continuity Check		
16	RW	-	RW	H	X	Operational Simulation		

17	W	-	W	H	X	Safety Shutdown Systems checking
						Diesel Day Tank and Skid
18	R	-	R	H	X	Material Identification
19	A	-	R	H	X	WPS, PQR
20	A	-	R	H	X	NDE Requirements
21	W	-	W	H	X	Leak Test of Diesel Day Tank
22	W	-	W	H	X	Final Visual and Dimensional Inspection
						Diesel Engine Coupled with Generator
23	W	-	W	H	X	Check Final, Visual, Dimensional, Alignment and Assembly
24	W	-	W	H	X	Crankshaft Alignment Check
25	W	-	W	H	X	String Test and Performance Test
26	W	-	W	H	X	Simulation of Control / Shutdown
27	W	-	W	H	X	Noise and Vibration level Check
28	W	-	Rw	H	X	Test for Engine Starting
29	RW	-	Rw	H	X	Protective Coating (Final DFT and Visual Check)
30	W	-	W	H	X	Check for Engine Generator Safety and Shutdown Devices
31	W	-	W	H	X	Simulation and Functional Test for Local Control Panel, Remote Control Panel
32	W	-	W	H	X	Final Assembly Inspection of Starting and Fuel Oil System during FAT
33	RW	-	Rw	H	X	Check for Accessories, Spares and Various Loose Items
34	Is	-	R	H	X	Final Documentation Review and Issue of Inspection Release Note
MIR/GIIR at Yard/Offshore						
35	W	W	-		X	Verification of items as per IRN
36	W	W			X	IMIR/GIIR on the basis of IRN
***Refer Applicable Electrical IRT for Electrical Equipments/Items.**						
LEGENDS & NOTES : Explained Separately						

FORMAT No.	Ref. PROCEDURE No.	ISSUE No.	REV. No.	REV. DATE:
ODS/SOF/004A	ODS/SOP/023	01	00	08.03.2016

ओएनजीसी ONGC	**Offshore Design Section Engineering Services (ISO – 9001:2008)**	**INSPECTION REQUIREMENT TABLE**	**IRT No.** ODS/MECH/IRT/18
			Rev No 0
			Discipline Mechanical

Item : Chlorinator System / Hypo chloride Generator	Inspection Category : "B"

Activity No.	1. Inspection by ONGC / Certification Agency (CA)	2. Inspection by ONGC / Third Party Inspection Agency (TPI)	3. Inspection by EPC's Inspection Agency (IA)	4. Inspection by Vendor/ Sub Vendor	5. Certificates/compliance/Data/Information to be submitted by vendor for Review/ Approval	6. Stage of Inspection Involved
						General
1	A	-	R	H	X	Inspection and Test Plan
2	A	-	R	H	X	FAT Procedure, SAT Procedure, Manufacturing Procedure, Performance and Mechanical Run Test Procedure
3	A	-	R	H	X	WPS/PQR & Repair Procedure, Heat Treatment, Surface Preparation and Protective Coating Procedure
4	R	-	R	H	X	Material Test Certificates, Corrosion Test / Additional Test Reports as per ONGC Specification, Hazardous Area Classification and IP Certificates for E&I Items, Test Certificates of Bought Out Items, Test Records
						Storage Supply Tanks, Filters, Blowers
5	W	-	W	H	X	Material Identification for Tank Parts Viz. Plates, Pipes, Flanges, Fittings, Dish Ends, Filter Elements, UV Sterilizer Fasteners etc. as applicable & Review of TCs
6	R/W	-	R/W	H	X	Stage Inspection Viz. Shell/Dish Set Up, Root/Back Chip D.P. Nozzle Set Up, Dimensional Check / DP Check Of Dish Ends, Tube Sheet Inspection, Piping Assembly (As applicable)
7	R	-	R	H	X	NDT, Heat Treatment Chart (As applicable)
8	RW	-	RW	H	X	Hydrostatic / Pneumatic Test (As applicable)
9	W	-	W	H	X	Final Visual and Dimensional Inspection
10	W	-	W	H	X	Testing of Blower
11	RW	-	RW	H	X	Protective Coating
						Pump
12	R	-	R	H	X	Material Test Certificates of Major Components
13	R	-	R	H	X	Hydrostatic Test REPORT of Casing
14	W	-	W	H	X	Mechanical Run Test and Performance Test of Pumps
						Connecting Piping

15	RW	-	RW	H	X	Raw Material Identification, Material Test Certificates & Records
16	R	-	R	H	X	NDE Requirements (As applicable)
17	W	-	W	H	X	Visual and Dimensional Inspection
18	W	-	W	H	X	Hydrostatic Testing
						All Instrumentation Items
19	R	-	R	H	X	Material TC & Calibration Reports for all E&I Items (As applicable)
20	RW	-	RW	H	X	Electrolytic Cell Routine Test, Pressure Test and Type Test. Certificate of Conformity for IP/ NEMA Enclosure Class for Transmitters, Switches, Junction Boxes etc., (As applicable). Control panel functional test & Logic tests for the equipment package during FAT. Instruments as per approved Instrument data sheets.
						Structural Skid
21	R	-	R	H	X	MTCs for all Structural Items
22	R	-	R	H	X	WPS & PQR
23	R	-	R	H	X	NDT, Heat Treatment Chart (As applicable)
24	W	-	W	H	X	Final Visual and Dimensional Inspection
						Complete Skid Assembly
25	W	-	W	H	X	Verify / Check all Components as per P&ID
26	W	-	W	H	X	Check all Connecting Piping as per P&ID
27	W	-	W	H	X	Final Visual and Dimensional Check of Complete Assembly
28	W	-	W	H	X	Functional Test of Complete Unit (FAT)
29	RW	-	Rw	H	X	Protective Coating (Final DFT and Visual Check)
30	Is	-	R	H	X	Documents Review and Issue of Inspection Release Note
						IMIR/GIIR at Yard/Offshore
31	W	W	-		X	Verification of items as per IRN
32	W	W			X	IMIR/GIIR on the basis of IRN
30	W	W		H	X	SAT/Performance Test of Package in field (offshore platform) by the vendor.

***Refer Applicable Electrical IRT for Electrical Equipments/Items**

LEGENDS & NOTES : Explained Separately

FORMAT No.	Ref. PROCEDURE No.	ISSUE No.	REV. No.	REV. DATE:
ODS/SOF/004A	ODS/SOP/023	01	00	08.03.2015

ओएनजीसी ONGC	**Offshore Design Section Engineering Services (ISO – 9001:2008)**	**INSPECTION REQUIREMENT TABLE**	**IRT No.**	ODS/MECH/IRT/19	
			Rev. No.	0	
			Discipline	Mechanical	

Item: Sea Water Fine Filters skids				Inspection Category : B		
Activity No.	**1. Inspection by ONGC /Certification Agency CA.**					
		2. Inspection by ONGC/Third Party Inspection Agency (TPI)				
			3. Inspection by EPC / EPC Inspection Agency (IA)			
				4. Inspection by Vendor / Sub vendor		
					5. Certificates/compliance/Data/Information to be submitted by vendor for Review/ Approval	
						6. STAGES OF INSPECTION INVOLVED.
1	A	-	R	H	X	QA Plane / Inspection & Test Plan (ITP)
2	R	-	R	H	X	Review of welding documents like WPS, PQR, welders qualification records and NDT personal qualification record (If welding is applicable)
						Pressure Vessels (Pulsation Dampers)- Seawater fine filter, Backwash Basket Strainer- All requirement of ASME Inspector (as applicable) shall be met.
3	RW	-	RW	H	X	Check/verify of items/equipment & review of documents i.e. material test certificates (MTC), conformance certificates as listed in the QAP.
4	W	-	W	H	X	ASME Code Stamping along with Applicable Data Reports (MDR)
						Backwash Air Blower
5	RW	-	RW	H	X	Check/verify of items/equipment & review of documents i.e. material test certificates (MTC), conformance certificates as listed in the QAP.
						Piping GRE
7	RW	-	RW	H	X	Raw Material identification/review of documents i.e. material test certificates (MTC), heat no. for traceability as listed in the QAP.
8	RW	-	RW	H	X	Stage inspection i.e. fit up, dimensional check, bonding etc.
9	W	-	W	H	X	Visual examination and dimensional check
10	RW	-	W	H	X	Hydrostatic test (as applicable)
						Structural
11	RW	-	RW	H	X	NDT (RT,UT,MT,PT), 100% review of RT films by TPI & at random by CA
12	RW	-	RW	H	X	Check/verify of items/equipment & review of documents i.e. material test certificates (MTC), conformance certificates, heat no. for traceability as listed in the QAP.
13	RW	-	RW	H	X	Stage inspection i.e. fit up, welding etc. (as applicable)
14	W	-	W	H	X	Visual inspection and dimensional check
15	RW	-	RW	H	X	Protective coating (as applicable)

						Instrumentation
16	RW	-	RW	H	X	Check/verify of items/equipment & review of documents i.e. material test certificates (MTC), conformance/compliance certificates, calibration report/certificates as listed in the QAP.
						Skid Package Assembly
17	W	-	W	H	X	Check/verify the correctness of piping line, equipment installation. Instrument & package assembly as per P&ID.
18	R	-	W	H	X	Leak test of piping (as applicable)
19	RW	-	W	H	X	Calibration certificates for instruments, Certificate of Conformity for IP/ NEMA Enclosure Class for Transmitters, Switches, Junction Boxes etc., (As applicable). Instruments as per approved Instrument data sheets.
20	W	-	W	H	X	Functional test of all instrument i.e. junction boxes, actuated valve etc.
21	R	-	R	H	X	Review of final document/manufacture's data reports
22	W	-	W	H	X	Final package inspection for completeness after packaging tagging, name plates, preservation, packing including spare.
23	Is	-	R	H	X	Issue of Inspection Release Note
IMIR/GIIR at Yard/Offshore						
24	W	W	-		X	Verification of items as per IRN
25	W	W			X	IMIR/GIIR on the basis of IRN
***Refer Applicable Electrical IRT for Electrical Equipments/Items**						
LEGENDS & NOTES : Explained Separately						

FORMAT No.	Ref. PROCEDURE No.	ISSUE No.	Rev No.	REV. DATE:
ODS/SOF/004A	ODS/SOP/023	01	0	08.03.2016

ओएनजीसी ONGC	Offshore Design Section Engineering Services (ISO – 9001:2008)	INSPECTION REQUIREMENT TABLE			IRT No.	ODS/MECH/IRT/20
					Rev No.	0
					Discipline	Mechanical
ITEM : De Oxygenation System					INSPECTION CATEGORY: A	

Activity	1. Inspection by ONGC / Certification Agency.(CA)	2. Inspection by ONGC / Third Party Inspection Agency (TPI)	3.Inspection by EPC/ EPC's Inspection Agency (IA)	4. Inspection by Vendor/ Sub Vendor	5. Certificates/compliance/Data/Information to be submitted by vendor for Review/ Approval	6.Stages of Inspection Involved	
General							
1	A	-	R	H	X		Inspection & Test Plan.
2	A	-	R	H	X		FAT & SAT Procedure of complete Unit
3	A	-	R	H	X		WPS / PQR / WPQ & Repair procedure (as applicable),NDT procedures, Hydrostatic/pneumatic test procedures(as applicable),Performance/Functional test procedure(if applicable) & Painting Procedure.
DO Tower(Deaerator), Swirl Separator & all Interconnecting Piping							
4	RW	-	RW	H	X		Material traceability & correlation for pressure parts Viz. Plates, Pipes, Flanges, Fittings, Dish ends, Filter elements, Vessel internals, Fasteners etc. & review of test certificates.
5	RW	-	RW	H	X		Fit-up, Welding, NDT & Heat treatment reports Review(as applicable).
6	W	-	W	H	X		Hydrostatic Test.
7	W	-	W	H	X		Check for Internal Lining/Coating (If & as applicable).
Ejectors							
8	RW	-	RW	H	X		Material traceability & correlation for pressure parts with Manufacturer's Test Certificates.
9	RW	-	RW	H	X		Fit-up, Welding, NDT & Heat treatment reports Review(As & if applicable).
10	RW	-	W	H	X		Hydrostatic & Functional test.
11	W	-	W	H	X		Final Visual & Dimensional check as per Model Number.
Vacuum Pump							
12	R	-	R	H	X		Material traceability & correlation with Manufacturer's Test Certificates for Major Pump Components.
13	RW	-	RW	H	X		NDT (As applicable) & Hydrostatic Test for Pump Casing.
14	W	-	W	H	X		Performance & Mechanical Run Test including Noise Level & Vibration/Balancing Check (As & if applicable)
15	W	-	W	H	X		Final Visual & Dimensional check as per Model Number.
Instrumentation Items							

16	R/W	-	R/W	H	X	Manufacturer's TC / Certificate of Conformity (as applicable), Functional / Routine / Type / Calibration test for Gauges, Valves etc. (as applicable). Control panel functional test & Logic tests for the equipment package during FAT. Instruments as per approved Instrument data sheets.
17	R	-	R	H	X	Certificates for hazardous Area Classification & Enclosure Class for Instrumentation items as per approved PS (as applicable).
Skid Fabrication						
18	R	-	R	H	X	Review of MTC's for Major Structural items.
19	W	-	W	H	X	Fit-up, Welding, NDT (As & if applicable).
20	W	-	W	H	X	Final Visual & Dimensional check.
Final Complete Skid Assembly Check						
21	W	-	W	H	X	Verify / Check all components as per P&ID, Mechanical clearance, Hydrostatic/Pneumatic test, Final Dimensional & Visual check. (As per ONGC Spec. 5103 Rev.1 & Approved P.S).
22	RW	-	Rw	H	X	Pre-Commissioning as per vendor's check list.
23	RW	-	Rw	H	X	Surface preparation & protective coating (Visual & Final paint DFT check as per 2005 spec.).
24	Is	-	R	H	X	Final documentation review & Issue of Inspection Release Note.
IMIR/GIIR at Yard/Offshore						
25	W	W	-		X	Verification of items as per IRN
26	W	W			X	IMIR/GIIR on the basis of IRN
27	W	W		H	X	SAT/Offshore Pre-commissioning, Commissioning &Testing at offshore.
LEGENDS & NOTE: Explained Separately						

FORMAT No.	Ref. PROCEDURE No.	ISSUE No.	REV. No.	REV. DATE:
ODS/SOF/004A	ODS/SOP/023	01	00	08.03.2016

ओएनजीसी ONGC	**Offshore Design Section Engineering Services (ISO – 9001:2008)**					**INSPECTION REQUIREMENT TABLE**	**IRT No** ODS/MECH/IRT/21
							Rev No. 0
							Discipline Mechanical
Item : **Centrifugal Pump (MIP & MOL)**							**Inspection Category : "A"**
Activity No.	**1. Inspection by ONGC / Certification Agency (CA)**						
		2. Inspection by ONGC / Third Party Inspection (TPI)					
			3. Inspection by Contractor / Contractor's Inspection Agency (IA)				
				4. Inspection by Vendor/ Sub Vendor			
					5.Certificates/compliance/Data/Information to be submitted by vendor for Review/ Approval		
						6.Stage of Inspection Involved	
						General	
1	-	-	W	H	-	Pre-inspection Meeting/Expediting	
2	A	-	R	H	X	QA Plan/ Inspection & Test Plan	
3	R	-	R	H	X	Material Test Certificates, Corrosion Test Reports, Hazardous Area Classification and IP Certificates for E&I Items, Instrument calibration, Test Certificates of Bought out Items, Test Records and Compliance to other PS Requirements	
4	R	-	R	H	X	NDT Procedures, Heat Treatment Procedure, Surface Preparation and Protective Coating Procedure, WPS & PQR (As applicable)	
5	R	-	R	H	X	Statutory Body Certificates for Hazardous Area Classification and Environmental Protection for Instrumentation Items (As applicable	
6	A	-	R	H	X	Tests/FAT & SAT Procedure including Hydrostatic Test Procedure	
7	W	-	W	H		Stage inspection e.g. Fit up, weld, hydrotest (as applicable)	
						Pump	
8	R	-	R	H	X	Material Identification, MTC Review & Records of Pump Casing, Impeller, Shaft	
9	RW	-	Rw	H	X	Dynamic Balancing of rotor assembly	
10	R/W	-	W	H	X	Hydrostatic Test of Casing Discharge Header & Column Pipes	
11	R	-	R	H	X	NDT REPORT as applicable	
12	W	-	W	H	X	Mechanical Seal and its component checking	
13	W	-	W	H	X	Mechanical Run Test	
14	W		W	H	X	Check/Verify the completeness components Case wear ring, Impeller wear ring etc.	
15	W	-	W	H	X	Performance Test (at Shut off, at Minimum Flow Rate, at Rated Flow and at 125% Capacity) on complete unit package, Endurance test for 4 hours, NPSH Test (one identical pump), Noise Test , Vibration Test	
16	W	-	W	H	X	Final Visual, Dimensional Check of Individual Components	

17	R	-	R	H	X	Test Result report correlation for Speed, Viscosity & Specific Gravity Conditions (as applicable)
18	W	-	W	H	X	Strip Down test for checking any abnormal rubbing or wear
						Instrumentation and Control
19	W	-	W	H	X	Final Visual, Dimensional Check
20	R	-	R	H	X	Material Test Certificate, Records, Type Test Reports
21	RW	-	RW	H	X	Check Individual Components, Calibration Check, Functional Check and Operational Check
						Complete Skid Assembly (Pump, coupling, etc)
22	R	-	R	H	X	Check/verify of items/equipment, review all applicable documents i.e. material test certificates, conformance/compliance certificates, test reports etc. for major brought out components/items
23	RW	-	RW	H	X	NDE (RT, UT, MPI, DPI) as applicable
24	R	-	R	H	X	Heat treatment as applicable
25	RW	-	RW	H	X	Protective Coating (Final DFT and Visual Check), Control panel functional test & Logic tests for the equipment package during FAT. Instruments as per approved Instrument data sheets.
26	W	-	W	H	X	Final inspection including visual, dimensional check, completeness after packing (including spares), name plate verification, tagging, preservation and preparation for shipping
27	Is	-	R	H	X	Final Documentation Review and Issue of Inspection Release Note
IMIR/GIIR at Yard/Offshore						
28	W	W	-		X	Verification of items as per IRN
29	W	W			X	IMIR/GIIR on the basis of IRN
29	W	W		H	X	SAT/Performance Test of Package in field (offshore platform) by the vendor.
***Refer Applicable Electrical IRT for Electrical Equipments/Items**						
LEGENDS & NOTES : Explained Separately						

FORMAT No.	Ref. PROCEDURE No.	ISSUE No.	REV. No.	REV. DATE:
ODS/SOF/004A	ODS/SOP/023	1	0	08.03.2016

ओएनजीसी ONGC	Offshore Design Section Engineering Services (ISO – 9001:2008)			INSPECTION REQUIREMENT TABLE		IRT No.	ODS/MECH/IRT/22
						Rev. No.	0
						Discipline	Mechanical
Item: SUMP CASSION WITH BLOW CASE						**Inspection Category : B**	
Activity No.	**1. Inspection by ONGC / Certification Agency (CA).**						
		2. Inspection by ONGC/Third Party Inspection Agency (TPI)					
			3. Inspection by EPC / EPC Inspection Agency (IA)				
				4. Inspection by Vendor /Sub vendor			
					5. Certificates/compliance/Data/Information to be submitted by vendor for Review/ Approval.		
						6. STAGES OF INSPECTION INVOLVED.	
						For Blow Case	
1	I	-	H	H	----	Pre-Inspection Meeting(If required)	
2	A	-	R	H	X	Approval QAP plan/Inspection and test plan(ITP) from vendor	
3	A	-	R	H	X	WPS , PQR approval & NDT Proc	
4	R	-	R	H	X	Welder Qualification	
5	R/W	-	R/W	H	X	Material receiving Inspection	
6	R/W	-	R/W	H	X	Raw Material identification & marking checks for critical/ pressure component only.	
7	R/W	-	R/W	H	X	Low stress punch mark transfer, verification, traceability	
8	R/W	-	R/W	H	X	Weld joint fit-up inspection	
9	R/W	-	R/W	H	X	Weld visual inspection before PWHT	
10	R	-	R	H	X	Post weld Heat treatment charts / record (as applicable)	
11	R/W	-	R/W	H	X	NDT (RT,UT,MPI,DPT), PMI and Hardness of weld joint (100% review of RT films by TPI & at random by CA)	
12	W	-	W	H	X	Dimensional Inspection, Nozzle orientation and level check (As per spec.)	
13	W	-	W	H	X	Pneumatic test of RF test	
14	W	-	W	H	X	ASME Code Stamping along with Applicable Data Reports (MDR)	
15	W	-	W	H	X	Hydro test and drying of vessel	
16	R	-	R	H	X	Certification of vessel by Authorized inspector(if applicable)	
						Surface Preparation and Painting / coating	
17	R	-	R	H	X	Surface preparation report of vessel after Blasting	
18	RW	-	RW	H	X	Painting/ coating inspection as per ONGC spec.	
						For Sump Caisson	

19	I	-	H	H	X	Pre-Inspection Meeting
20	A	-	R	H	X	Approval QAP plan/Inspection and test plan(ITP) from vendor
21	A	-	R	H	X	WPS & PQR approval & NDT
22	R	-	R	H	X	Welder Qualification
23	R	-	R	H	X	Material receiving Inspection
24	R	-	R	H	X	Raw Material identification & marking checks for critical/ pressure component only.
25	W	-	W	H	X	Low stress punch mark transfer, verification, traceability
26	W	-	W	H	X	Weld joint fit-up inspection
27	R	-	R/W	H	X	Weld visual inspection before PWHT
28	R	-	R	H	X	Post weld Heat treatment charts / record (as applicable)
29	R/W	-	R/W	H	X	NDE(RT,UT,MPI,DPT), PMI and Hardness of weld joint (100% review of RT films by TPI & at random by CA)
30	R/W	-	W	H	X	Dimensional Inspection, Nozzle orientation and level check (As per spec.)
31	W	-	W	H	X	Internal assembly(Inspection of internal, if any)
						Piping for Sump Cassion
32	A	-	R	H	X	WPS & PQR for welding & NDT Proc
33	R/W	-	R/W	H	X	NDT as per ONGC spec.
34	R	-	R/W	H	X	Weld visual inspection and Final dimensional check
35	W	-	W	H	X	Leak testing of SS Tubing
						Piping for Blow Case
36	A	-	A	H	X	WPS & PQR for welding& NDT Proc
37	R/W	-	R/W	H	X	NDT as per ONGC spec.
38	R/W	-	R/W	H	X	Weld visual inspection and Final dimensional check
39	W	-	W	H	X	Hydro test of pipe spool connected to blow case.
						Surface Preparation and Painting / coating
40	R/W	-	R/W	H	X	Surface preparation of vessel after Blasting
41	RW	-	R/W	H	X	Stage wise painting/ coating inspection as per ONGC spec.
						Others requirements
42	R/W	-	R/W	H	X	Review of final documentation to comply with specification requirements (MDR). Calibration certificates for instruments Certificate of Conformity for IP/ NEMA Enclosure Class for Transmitters, Switches, Junction Boxes etc., (As applicable). Instruments as per approved Instrument data sheets. Control panel functional test & Logic tests for the equipment package during FAT

43	W	-	W	H	X	Final Package inspection for completeness during/ after packing - tagging, preservation, packing including spare.
44	Is	-	R	H	X	Issue of Inspection Release Note
IMIR/GIIR at Yard/Offshore						
45	W	W	-		X	Verification of items as per IRN
46	W	W			X	IMIR/GIIR on the basis of IRN
***Refer Applicable Electrical IRT for Electrical Equipments/Items**						
LEGENDS & NOTES : Explained Separately						

FORMAT No.	Ref. PROCEDURE No.	ISSUE No.	REV. No.	REV. DATE:
ODS/SOF/004A	ODS/SOP/023	1	0	08.03.2016

ओएनजीसी ONGC	Offshore Design Section Engineering Services (ISO – 9001:2008)			INSPECTION REQUIREMENT TABLE		IRT No.	ODS/MEC/IRT/23
						Rev. No.	0
						Discipline	Mechanical
ITEM : CHEMICAL STORAGE AND INJECTION SYSTEM						INSPECTION CATEGORY: B	
Activity	1. Inspection by ONGC / Certification Agency.(CA)						
		2. Inspection by ONGC / Third Party Inspection Agency (TPI)					
			3.Inspection by EPC / EPC Inspection Agency (IA)				
				4. Inspection by Vendor/ Sub Vendor			
					5.Certificates/compliance/Data/Information to be submitted by vendor for Review/ Approval		
						6. Stage of Inspection Involved	
						General	
1	A	-	R	H	X	Inspection and test plan	
2	A	-	R	H	X	Submission of applicable welding, NDT, Heat treatment procedures and Qualification records.	
						Pumps	
3	R	-	R	H	X	Manufacturer's test certificates /Compliances for pump components.	
4	W	-	W	H	X	Hydrostatic Test & Performance/Run Test, NPSH Test of pump as per ONGC specification/code.	
5	W	-	W	H	X	Vibration & Noise test as per ONGC Specification	
6	R/W		W	H	X	Linearity and Repeatability @ 100%, 75%, 50%, 25%, and 10% of rated flow (As applicable)	
						Tank (Atmospheric Pressure)Storage	
7	RW	-	RW	H	x	Raw material identification. (Major parts)	
8	RW	-	W	H	x	Raw material identification. (Misc. parts)	
9	RW	-	RW	H	x	Stage Inspection like fit up, welding & NDT etc. (As applicable)	
10	RW	-	RW	H	x	NDE requirements (RT/UT/MPI/DPT - as applicable).(*100% Review of RT films)	
11	W	-	W	H	x	Surface visual (internal & external) inspection, dimension check and mechanical clearance.	
12	RW	-	W	H	x	Leak test	
13	W	-	W	H	x	Pneumatic test of R.F. Pads (As applicable)	
14	W	-	W	H	x	Final visual and dimensional inspection.	
15	RW	-	RW	H	x	Surface preparation and protective coating (final DFT check and visual) as applicable.	
16	RW	-	RW	H	x	Inspection of lining on internal surface if applicable.	

17	RW	-	RW	H	x	Inspection of internals (fabrication of internals, fitment and alignment check), if any
						Connecting piping
18	R	-	R	H	X	Material test certificates and records(EN 10204 3.1 type and ONGC spec 2004A)
19	R	-	R	H	X	WPS/PQR for welding as per 2009F.
20	R	-	R	H	X	NDT (as applicable).
21	RW	-	RW	H	X	Hydrostatic testing.
						Structural
22	R	-	R	H	X	Material test certificates and records.
23	A	-	R	H	X	WPS/PQR for welding as per AWS D1.1 & Spec .2009F.
24	W	-	W	H	X	Check for final visual and dimensional inspection
						Instrumentation Items
25	R	-	R	H	X	Manufacture's TC /Certificate of conformity review (As applicable)
26	R	-	R	H	X	Hazardous area classification/enclosure class certification for E&I items.
27	RW	-	RW	H	X	Functional /Routine/Type/Range/Calibration Test for gauges, Indicators, Flow & Instrument Transmitters, etc. (As applicable). Instruments as per approved Instrument data sheets.
						Complete skid assembly
28	RW	-	W	H	X	Verify/check all components (Piping, equipment and instrumentation systems/assemblies as per drawing/P&ID.
29	W	-	W	H	X	Check final visual dimensions of complete skid assembly
30	Rw	-	W	H	X	System integrity check for complete skid
31	Rw	-	W	H	X	Surface preparation and painting inspection (Final DFT) as per ONGC spec.
32	W	-	W	H	X	Factory acceptance test
33	Is	-	R	H	X	Issue of inspection release note
IMIR/GIIR at Yard/Offshore						
34	W	W	-		X	Verification of items as per IRN
35	W	W			X	IMIR/GIIR on the basis of IRN
***Refer Applicable Electrical IRT for Electrical Equipments/Items**						
LEGENDS & NOTES: Explained Separately						

FORMAT No.	Ref. PROCEDURE No.	ISSUE No.	REV. No.	REV. DATE:
ODS/SOF/004A	ODS/SOP/023	01	00	08.03.2016

ओएनजीसी ONGC	**Offshore Design Section Engineering Services (ISO – 9001:2008)**	**INSPECTION REQUIREMENT TABLE**	**IRT No.** ODS/MECH/IRT/24
			Rev. No. 0
			Discipline Mechanical

Item : Centrifugal Pump (Sump Pump) | Inspection Category : "B"

Activity No.	1. Inspection by ONGC / Certification Agency (CA)	2. Inspection by ONGC / Third Party Inspection Agency (TPI)	3. Inspection by EPC / EPC's Inspection Agency (IA)	4. Inspection by Vendor / Sub Vendor	5. Certificates/compliance/Data/Information to be submitted by vendor for Review/ Approval	6. Stage of Inspection Involved
1	A	-	R	H	X	Inspection and Test Plan
2	A	-	R	H	X	FAT Procedure of complete Unit
3	R	-	R	H	X	Manufacturer's Test Certificates for Pressure Containing Parts and for Major Pump Components
4	R	-	R	H	X	WPS, WPQ & PQR (As applicable)
5	R	-	R	H	X	NDT Procedure of Pump Components & Piping as required in specs.
6	R	-	R	H	X	Statutory Body Certificates for Hazardous Area Classification and Environmental Protection for Instrumentation Items (As applicable)
7	R	-	R	H	X	Calibration Records and Certificates for Pressure Gauges and other Instruments
						Pump
8	W	-	W	H	X	Hardness Check on Shaft & Impeller, Wear Rings
9	RW	-	W	H	X	Visual Inspection and NDT of Nozzle Weld, Butt Weld or Fillet Weld on Pressure Containing Parts, Shafting etc. as per applicable ONGC Spec.
10	RW	-	Rw	H	X	Visual Check of Major Components before Assembly and Pump Running Clearances
11	W	-	W	H	X	Hydrostatic Test for Pump Casing
12	W	-	W	H	X	Dynamic Balancing of Rotor
13	RW	-	Rw	H	X	Dimensional Check of Assembled Pump Package as per Approved Drawing/ Datasheet
14	W	-	W	H	X	Mechanical Seal and its Component Checking
15	W	-	W	H	X	NPSH, Performance Test & Performance Curve Approval
16	W	-	W	H	X	Mechanical Run Test at rated RPM
17	RW	-	W	H	X	Noise and Vibration Check as per specification
18	R	-	R	H	X	Test Result Correlation for Speed, Viscosity & Specific Gravity Conditions (As applicable)

						Instrumentation Items
19	R	-	R	H	X	Material TC Review, Hydrostatic Testing, Functional Test for Instrument (As applicable)
20	RW	-	RW	H	X	Functional / Routine / Type / Range / Calibration Test for Gauges, Indicators, Transmitters and other Instruments, Calibration certificates for instruments., Certificate of Conformity for IP/ NEMA Enclosure Class for Transmitters, Switches, Junction Boxes etc., (As applicable). Instruments as per approved Instrument data sheets. Control panel functional test & Logic tests for the equipment package during FAT
						Skid Assembly
21	W	-	W	H	X	Final Inspection of Pump Skid including all Piping and Assembly and All Items on the Skid
22	RW	-	RW	H	X	Protective Coating (Final DFT & Visual Check)
23	Is	-	R	H	X	Final Documentation Review and Issue of Inspection Release Note
IMIR/GIIR at Yard/Offshore						
24	W	W	-		X	Verification of items as per IRN
25	W	W			X	IMIR/GIIR on the basis of IRN
***Refer Applicable Electrical IRT for Electrical Equipments/Items**						
LEGENDS & NOTES : Explained Separately						

FORMAT No.	Ref. PROCEDURE No.	ISSUE No.	REV. No.	REV. DATE:
ODS/SOF/004A	ODS/SOP/023	01	00	08.03.2016

ओएनजीसी ONGC	**Offshore Design Section Engineering Services (ISO – 9001:2008)**			**INSPECTION REQUIREMENT TABLE**	**IRT No.**	ODS/MECH/IRT/25
					Rev No	0
					Discipline	Mechanical

Item : Positive Displacement Pump-Controlled Volume (Electric Motor Driven)	Inspection Category : "B"

Activity No.	**1. Inspection by ONGC / Certification Agency (CA)**	**2. Inspection by ONGC / Third Party Inspection (TPI)**	**3. Inspection by Contractor / Contractor's Inspection Agency (IA)**	**4. Inspection by Vendor/ Sub Vendor**	**5.Certificates/compliance/Data/Information to be submitted by vendor for Review/ Approval**	**6. Stage of Inspection Involved**
1	-	-	W	H	-	Pre-inspection Meeting/Expediting
2	A	-	R	H	X	QA Plan/ Inspection & Test Plan
3	R	-	R	H	X	Material Test Certificates, Corrosion Test Reports, Hazardous Area Classification and IP Certificates for E&I Items, Statutory Body Certificates (as applicable), Instrument caibration,Test Certificates of Bought out Items ((Pump Seal System, Pulsation Dampener, valves and other miscellaneous items), Test Records and Compliance to other PS Requirements
4	R	-	R	H	X	NDT Procedures, Heat Treatment Procedure, Surface Preparation and Protective Coating Procedure, WPS & PQR (As applicable)
5	A	-	R	H	X	FAT Procedure & Hydrostatic Test Procedure
6	W	-	W	H	X	Run Test, Performance Test on complete unit package (including Pressure Relief Valve Check), NPSH Test, Noise Test, Vibration Test as applicable Control panel functional test & Logic tests for the equipment package during FAT. Instruments as per approved Instrument data sheets.
7	R	-	W	H	X	Final Visual, Dimensional Check of Individual Components
8	R	-	R	H	X	Test Result correlation for Speed, Viscosity & Specific Gravity Conditions (as applicable)
9	R	-	R	H	X	Protective Coating (Final DFT and Visual Check)
10	R	-	Rw	H	X	Final inspection including visual, dimensional check, completeness after packing (including spares), name plate verification, tagging, preservation and preparation for shipping
11	Is	-	R	H	X	Final Documentation Review and Issue of Inspection Release Note
						IMIR/GIIR at Yard/Offshore
12	W	W	-		X	Verification of items as per IRN
13	W	W			X	IMIR/GIIR on the basis of IRN

***Refer Applicable Electrical IRT for Electrical Equipments/Items**

LEGENDS & NOTES : Explained Separately				
FORMAT No.	Ref. PROCEDURE No.	ISSUE No.	REV. No.	REV. DATE:
ODS/SOF/004A	ODS/SOP/023	01	00	08.03.2016

ओएनजीसी ONGC	**Offshore Design Section Engineering Services (ISO – 9001:2008)**	**INSPECTION REQUIREMENT TABLE**	**IRT No.** ODS/MECH/IRT/27
			Rev No 0
			Discipline Mechanical

Item : Reciprocating Plunger Pump	Inspection Category : "A"

Activity No.	1. Inspection by ONGC / Certification Agency (CA)	2. Inspection by ONGC / Third Party Inspection (TPI)	3. Inspection by Contractor / Contractor's Inspection Agency (IA)	4. Inspection by Vendor/ Sub Vendor	5. Certificates/compliance/Data/Information to be submitted by vendor for Review/ Approval	6. Stage of Inspection Involved
						General
1	-	-	W	H	-	Pre-inspection Meeting/Expediting
2	A	-	R	H	X	QA Plan/ Inspection & Test Plan
3	R	-	R	H	X	Material Test Certificates, Corrosion Test Reports, Hazardous Area Classification and IP Certificates for E&I Items, Statutory Body Certificates (as applicable), Instrument calibration Test Certificates of Bought out Items, Test Records and Compliance to other PS Requirements
4	R	-	R	H	X	NDT Procedures, Heat Treatment Procedure, Surface Preparation and Protective Coating Procedure, WPS & PQR (As applicable)
5	A	-	R	H	X	Tests/FAT Procedure including Hydrostatic Test Procedure
6	W	-	W	H		Stage inspection e.g Fit up, weld, hydrotest (as applicable)
						Pump
7	RW	-	RW	H	X	Material Identification, Material Test Certificates (MTC) Review & Records of Pump Components
8	RW	-	RW	H	X	Hardness Check on Plunger, Wear Rings, wetted parts.
9	RW	-	RW	H	X	NDT and PWHT as applicable
10	W	-	W	H	X	Mechanical Run Test
11	W	-	W	H	X	Performance Test on complete unit package, NPSH Test (one identical pump) , Noise Test , Vibration Test etc. as per specification
12	W		W	H	X	Final Visual, Dimensional Check of Individual Components
13	R	-	R	H	X	Test Result correlation for Speed, Viscosity & Specific Gravity Conditions (as applicable)

14	W	-	W	H	X	Strip Down test for checking any abnormal rubbing or wear
						Instrumentation and Control
15	W	-	W	H	X	Final Visual, Dimensional Check, Control panel functional test & Logic tests for the equipment package during FAT
16	R	-	R	H	X	Material Test Certificate, Records, Type Test Reports, Calibration certificates for instruments, Certificate of Conformity for IP/ NEMA Enclosure Class for Transmitters, Switches, Junction Boxes etc., (As applicable). Instruments as per approved Instrument data sheets
17	W	-	W	H	X	Check Individual Components, Calibration Check, Functional Check and Operational Check
						Complete Skid Assembly
18	R	-	R	H	X	Check/verify of items/equipment, review all applicable documents i.e. material test certificates, conformance/compliance certificates, test reports etc. for major brought out components/items (Pump Seal System, Stuffing Box, Pulsation Dampener, valves and other miscellaneous items)
19	R	-	R	H	X	NDE (RT, UT, MPI, DPI) as applicable
20	R	-	R	H	X	Heat treatment as applicable
21	RW	-	Rw	H	X	Protective Coating (Final DFT and Visual Check)
22	RW	-	RW	H	X	Final inspection including visual, dimensional check, completeness after packing (including spares), name plate verification, tagging, preservation and preparation for shipping
23	Is	-	R	H	X	Final Documentation Review and Issue of Inspection Release Note
IMIR/GIIR at Yard/Offshore						
24	W	W	-		X	Verification of items as per IRN
25	W	W			X	IMIR/GIIR on the basis of IRN
***Refer Applicable Electrical IRT for Electrical Equipments/Items**						
LEGENDS & NOTES : Explained Separately						

FORMAT No.	Ref. PROCEDURE No.	ISSUE No.	REV. No.	REV. DATE:
ODS/SOF/004A	ODS/SOP/023	01	00	08.03.2016

ओएनजीसी ONGC	**Offshore Design Section Engineering Services (ISO – 9001:2008)**					**INSPECTION REQUIREMENT TABLE**	**IRT No.** ODS/MECH/IRT/28 **Rev No.** 0 **Discipline** Mechanical
Item : Vacuum Pump							Inspection Category : "B"
Activity No.	**1. Inspection by ONGC / Certification Agency (CA)**						
		2. Inspection by ONGC / Third Party Inspection (TPI)					
			3. Inspection by Contractor / Contractor's Inspection Agency (IA)				
				4. Inspection by Vendor/ Sub Vendor			
					5.Certificates/compliance/Data/Information to be submitted by vendor for Review/ Approval		
						6. Stage of Inspection Involved	
						General	
1	-	-	W	H	-	Pre-inspection Meeting/Expediting	
2	A	-	R	H	X	QA Plan/ Inspection & Test Plan	
3	R	-	R	H	X	Material Test Certificates, Corrosion Test Reports, Hazardous Area Classification and IP Certificates for E&I Items, Statutory Body Certificates (as applicable), Instrument calibration, Test Certificates of Bought out Items, Test Records and Compliance to other PS Requirements	
4	R	-	R	H	X	NDT Procedures, Heat Treatment Procedure, Surface Preparation and Protective Coating Procedure, WPS & PQR (As applicable)	
5	A	-	R	H	X	FAT Procedure & Hydrostatic Test Procedure	
						Pump	
6	R	-	R	H	X	Material Identification, MTC Review & Records of Pump Casing, Impeller, Shaft	
7	W	-	W	H	X	Dynamic Balancing of rotor assembly	
8	W	-	W	H	X	Hydrostatic Test of Casing, Discharge Header	
9	R	-	R	H	X	NDT as applicable	
10	W	-	W	H	X	Mechanical Seal and its component checking	
11	W	-	W	H	X	Mechanical Run Test	
12	W		W	H	X	Check/Verify the completeness components Case wear ring, Impeller wear ring etc.	
13	W	-	W	H	X	Performance Test on complete unit package, Endurance test for 4 hours, Noise Test , Vibration Test	
14	W	-	W	H	X	Final Visual, Dimensional Check of Individual Components	
15	R	-	R	H	X	Test Result correlation for Speed, Viscosity & Specific Gravity Conditions (as applicable)	

16	W	-	W	H	X	Strip Down test for checking any abnormal rubbing or wear
						Instrumentation and Control
17	RW	-	RW	H	X	Final Visual, Dimensional Check, Calibration certificates for instruments., Certificate of Conformity for IP/ NEMA Enclosure Class for Transmitters, Switches, Junction Boxes etc., (As applicable). Instruments as per approved Instrument data sheets.
18	R	-	R	H	X	Material Test Certificate, Records, Type Test Reports. Control panel functional test & Logic tests for the equipment package during FAT
19	W	-	W	H	X	Check Individual Components, Calibration Check, Functional Check and Operational Check
						Complete Skid Assembly
20	R	-	R	H	X	Check/verify of items/equipment, review all applicable documents i.e. material test certificates, conformance/compliance certificates, test reports etc. for major brought out components/items
21	R	-	R	H	X	NDE (RT, UT, MPI, DPI) as applicable
22	R	-	R	H	X	Heat treatment as applicable
23	RW	-	Rw	H	X	Protective Coating (Final DFT and Visual Check)
24	RW	-	Rw	H	X	Final inspection including visual, dimensional check, completeness after packing (including spares), name plate verification, tagging, preservation and preparation for shipping
25	Is	-	W	H	X	Final Documentation Review and Issue of Inspection Release Note
IMIR/GIIR at Yard/Offshore						
26	W	W	-		X	Verification of items as per IRN
27	W	W			X	IMIR/GIIR on the basis of IRN
***Refer Applicable Electrical IRT for Electrical Equipments/Items**						
LEGENDS & NOTES : Explained Separately						

FORMAT No.	Ref. PROCEDURE No.	ISSUE No.	REV. No.	REV. DATE:
ODS/SOF/004A	ODS/SOP/023	01	00	08.03.2016

ओएनजीसी ONGC	**Offshore Design Section Engineering Services (ISO – 9001:2008)**	**INSPECTION REQUIREMENT TABLE**	**IRT No.** ODS/MECH/IRT/29-M
			Rev No. 0
			Discipline Mechanical

ITEM :Motor Driven Process Gas Compressor Package	Inspection Category : "A"

Activity No.	1. Inspection by ONGC / Certification Agency (CA)	2. Inspection by ONGC / Third Party Inspection (TPI)	3. Inspection by EPC / EPC Inspection Agency (IA)	4. Inspection by Vendor/ Sub Vendor	5. Certificates/compliance/Data/Information to be submitted by vendor for Review/ Approval	6. Stage of Inspection Involved
						Compressor
1	A	-	R	H	x	Inspection and Test Plan with Test Procedure for Complete Compressor Package
2	A	-	R	H	X	FAT & SAT Procedure of complete Unit-Compressor Package
3	R	-	R	H	x	Material Test Certificates / Compliance for Major Compressor Components viz Casing, Impellers, Shaft Bearings, Bearing Housing Piping, etc.
4	Rw	-	Rw	H	x	NDT of Compressor Components viz Casing, Impellers, Shaft, etc. Including Piping, as applicable at Manufacturer's Work
5	R	-	R	H	x	WPS / PQR & Repair Procedure for Piping Casing, Impeller Shaft
6	W	-	W	H	x	System Leak Test
7	W	-	W	H	x	Hydro Static Test for Pressure retaining Parts of Compressor (Witness for Casing, Random Witness for Piping)
8	W	-	W	H	x	Over Speed Test on Impellers Including Dimensional Check and DP Test after Over Speed Test
9	R	-	W	H	x	Dynamic Balancing of Each Impeller / Rotor and Rotor Assembly
10	W	-	W	H	x	Mechanical Run Out of Rotor Assembly
11	W	-	W	H	x	Dry Gas Seal Rig Test at Seal's Manufacturer's Works
12	W	-	W	H	x	Shop Test - Mechanical Run Test for Compressor as per relevant Equipment Code as per Approved Shop Test Procedure at Manufacturer's works
`13	W	-	W	H	x	Performance Test (Factory Acceptance Test) of Complete Compressor (Including Field Bump Test for Compressor), at Manufacturer's Work according to approved Shop Test Procedure
14	W	-	W	H	x	Strip Down Test after Satisfactory Mechanical Run Test (Only Bearing Inspection)
14	W	-	W	H	x	Gas Leakage Test (Static Seal Test)

16	W	-	W	H	x	Final Inspection of the Complete Assembled Compressor Including Visual and Dimensional Check and Completeness Check of All Items as per Approved P&IDs and GADs
17	R	-	R	H	x	Manufacturer's Test Certificates / Compliance and Calibration Certificates for Bought Out Items like Bearing, Valves, Probes and Other Instruments etc.
18	R	-	R	H	x	Type Test report and Certificate from Statutory Bodies (As applicable)
19	W	-	W	H	x	Instrument Check as per P&ID, Calibration certificates for instruments. Certificate of Conformity for IP/ NEMA Enclosure Class for Transmitters, Switches, Junction Boxes etc., (As applicable). Instruments as per approved Instrument data sheets. Control panel functional test & Logic tests for the equipment package during FAT
20	W	-	W	H	x	Vibration and Noise Test
21	Rw	-	Rw	H	x	Protective Coating & Insulation (Final DFT and Visual Check)
22	Is	-	R	H	x	Documentation Review and Issue of Inspection Release Note for Compressor Package
						Complete Skid Assembly (Compressor + Motor +VSD) at YARD/OFFSHORE
24	W	W	W	H	x	Inspection of Main Coupling
25	W	W	W	H	x	String Test at Yard for Complete Compressor Train as per approved Test Procedure
26	R	R	R	H	x	String Test Documentation review
27	W	W	-		X	Verification of items as per IRN
28	W	W			X	IMIR/GIIR on the basis of IRN
29	W	W	-	H	x	Offshore Performance Test/SAT for Complete Compressor Train as per approved Procedure

***Refer Applicable Electrical IRT for Electrical Equipments/Items**

LEGENDS & NOTES : Explained Separately

FORMAT No.	Ref. PROCEDURE No.	ISSUE No.	REV. No.	REV. DATE:
ODS/SOF/004A	ODS/SOP/023	01	00	08.03.2016

ओएनजीसी ONGC	Offshore Design Section Engineering Services (ISO – 9001:2008)	INSPECTION REQUIREMENT TABLE	IRT No. ODS/MECH/IRT/29 Rev No. 0 Discipline Mechanical

ITEM : Process Gas Compressor Package	Inspection Category : "A"

Activity No.	1. Inspection by ONGC / Certification Agency (CA)	2. Inspection by ONGC / Third Party Inspection (TPI)	3. Inspection by EPC / EPC Inspection Agency (IA)	4. Inspection by Vendor/ Sub Vendor	5. Certificates/compliance/Data/Information to be submitted by vendor for Review/ Approval	6. Stage of Inspection Involved
						Turbine
1	A	-	R	H	x	Inspection and Test Plan
2	A	-	R	H	x	Manufacturing Procedure, FAT & SAT Procedure, Performance & Mechanical Run Test Procedure, String Test Procedure
3	R	-	R	H	x	Material Test Certificates / Compliance for Major Turbine Components, viz Casing, Rotors, Shaft, Couplings, Bearings, Bearing Housing, Piping etc. by Turbine Manufacturer
4	Rw	-	Rw	H	x	NDT, as applicable for Turbine Components viz Casing, Shaft, Blades, Casing etc. Including Piping
5	R	-	R	H	x	WPS / PQR & Repair Procedure for Piping, Casing, Impeller, Shaft
6	W	-	W	H	x	Hydrostatic Test for Pressure retaining Parts of Turbine (As applicable)
7	W	-	W	H	x	Dynamic Balancing of Each Rotor & Coupling
8	W	-	W	H	x	Mechanical Run Out and Electrical Run Out Check
9	W	-	W	H	x	Visual and Dimensional Inspection of Base Frame and Enclosure
10	W	-	W	H	x	Shop Test - Mechanical Run Test for Gas Turbine as per Relevant Equipment Code and Specification according to Approved Shop Test Procedure at Manufacturer's Works
11	W	-	W	H	x	Performance Test (Factory Acceptance Test) of Complete Turbine as per Code Requirements at Manufacturer's Work according to Approved Shop Test Procedure
12	W	-	W	H	x	System Leak Test
13	W	-	W	H	x	Final Inspection of the Complete Assembled Turbine Including Visual and Dimensional Check and Completeness Check of All Items as per Approved P&IDs and GADs
14	W	-	W	H	x	Final Inspection of Complete Lube Oil System Including Visual and Dimensional Checks of All Major Items (Performance)
15	R	-	R	H	x	Manufacturer's Test Certificates / Compliance and Calibration Certificates for Bought Out Items like Valves, Probes and Other Instruments, etc.
16	R	_	R	H	X	Calibration certificates for instruments., Certificate of Conformity for IP/ NEMA Enclosure Class for Transmitters, Switches, Junction Boxes etc., (As applicable). Instruments as per approved Instrument data sheets. Control panel functional test & Logic tests for the PGC during FAT
17	R	-	R	H	x	Review of Functional Test Certificates of Battery and Battery Charger, PLC (Programmable Logic Controller) & Other Instruments
18	R	-	W	H	x	Inspection and Testing of UCP (Unit Control Panel), LCP (Local Control Panel)

19	R	-	W	H	x	Vibration & Noise Test
20	R	-	R	H	x	Oil Cleanliness Check
21	Rw	-	Rw	H	x	Protective Coating & Insulation (Final DFT and Visual Check)
22	R	-	R	H	x	WPS / PQR & Repair Procedure for Casing, Base Plate etc. (As applicable)
23	R	-	R	H	x	Over Speed Test
24	R	-	R	H	x	Type Test and Certificate from Statutory Bodies (As applicable)
25	H	-	H	H	x	Documentation Review and Issue of Inspection Release Note for Turbine
26	R	R	-	-	x	Verification of Inspection Release Note of Turbine at Yard
						Compressor
27	A	-	R	H	x	Inspection and Test Plan with Test Procedure for Complete Compressor Package
28	R	-	R	H	x	Material Test Certificates / Compliance for Major Compressor Components viz Casing, Impellers, Shaft Bearings, Bearing Housing Piping, etc.
29	Rw	-	Rw	H	x	NDT of Compressor Components viz Casing, Impellers, Shaft, etc. Including Piping, as applicable at Manufacturer's Work
30	R	-	R	H	x	WPS / PQR & Repair Procedure for Piping ,Casing,, Impeller, Shaft
31	W	-	W	H	x	System Leak Test
32	W	-	W	H	x	Hydro Static Test for Pressure retaining Parts of Compressor (Witness for Casing, Random Witness for Piping)
33	W	-	W	H	x	Over Speed Test on Impellers Including Dimensional Check and DP Test after Over Speed Test
34	W	-	W	H	x	Dynamic Balancing of Each Impeller / Rotor and Rotor Assembly
35	W	-	W	H	x	Mechanical Run Out Check of Rotor Assembly
36	W	-	W	H	x	Dry Gas Seal Rig Test at Seal's Manufacturer's Works
37	W	-	W	H	x	Shop Test - Mechanical Run Test for Compressor as per relevant Equipment Code as per Approved Shop Test Procedure at Manufacturer's works
38	W	-	W	H	x	Performance Test (Factory Acceptance Test) of Complete Compressor (Including Field Bump Test for Compressor), at Manufacturer's Work according to approved Shop Test Procedure
39	W	-	W	H	x	Strip Down Test after Satisfactory Mechanical Run Test (Only Bearing Inspection)
40	W	-	W	H	x	Gas Leakage Test (Static Seal Test)
41	W	-	W	H	x	Final Inspection of the Complete Assembled Compressor Including Visual and Dimensional Check and Completeness Check of All Items as per Approved P&IDs and GADs
42	W	_	W	H	X	Calibration certificates for instruments., Certificate of Conformity for IP/ NEMA Enclosure Class for Transmitters, Switches, Junction Boxes etc., (As applicable). Instruments as per approved Instrument data sheets. Control panel functional test & Logic tests for the PGC during FAT
43	R	-	R	H	x	Manufacturer's Test Certificates / Compliance and Calibration Certificates for Bought Out Items like Bearing, Valves, Probes and Other Instruments etc.
44	W	-	W	H	x	Instrument Check as per P&ID
45	W	-	W	H	x	Vibration and Noise Test
46	Rw	-	Rw	H	x	Protective Coating & Insulation (Final DFT and Visual Check)
47	Is	-	R	H	x	Documentation Review and Issue of Inspection Release Note for Compressor Package

						Complete Skid Assembly (Compressor + Turbine) at Yard/Offshore
48	W	W	W	H	x	Inspection of Main Coupling
49	W	W	W	H	x	String Test at Yard for Complete Turbine and Compressor Train as per approved Test Procedure
50	R	R	R	H	x	String Test Documentation review
51	W	W	-	H	x	Offshore Performance Test /SAT for Complete Turbine / Compressor Train as per approved Procedure
52	W	W	-	H	X	Verification of items as per IRN
53	W	W			X	IMIR/GIIR on the basis of IRN
54	W	W		H	X	SAT/Performance Test of Package in field (offshore platform) by the vendor.

***Refer Applicable Electrical IRT for Electrical Equipments/Items**

LEGENDS & NOTES : Explained Separately

FORMAT No.	Ref. PROCEDURE No.	ISSUE No.	REV. No.	REV. DATE:
ODS/SOF/004A	ODS/SOP/023	01	00	08.03.2016

ओएनजीसी ONGC	Offshore Design Section Engineering Services (ISO – 9001:2008)			INSPECTION REQUIREMENT TABLE			IRT No	ODS/MECH/IRT/30
							Rev No	0
							Discipline	Mechanical
ITEM : Gas Turbine Generator							Inspection Category : "A"	
Activity No.	1. Inspection by ONGC / Certification Agency (CA)							
		2. Inspection by ONGC / Third Party Inspection Agency (TPI)						
			3. Inspection by EPC / EPC's Inspection Agency (IA)					
				4. Inspection by Vendor / Sub Vendor				
					5. Certificates/compliance/Data/Information to be submitted by vendor for Review/ Approval			
						6. Stage of Inspection Involved		
						General		
1	A	-	R	H	X	Inspection and Test Plan		
2	A	-	R	H	X	Manufacturing Procedure, FAT & SAT Procedure, Performance & Mechanical Run Test Procedure, String Test Procedure		
3	R	-	R	H	X	Material Identification, Manufacturer's Test Certificates / Compliance & Calibration Certificates for Bought out Items like Bearings, Valves, Probes and other Instruments etc.		
4	R	-	R	H	X	Statutory Body Certificates for Hazardous Area Classification & Environmental Protection for Instrumentation Items		
5	R	-	R	H	X	NDT Procedure, WPS/PQR		
						Inspection & Testing		
						Gas Turbine		
6	R	-	R	H	X	Material Test Certificates for Major Turbine Components		
7	R	-	R	H	X	NDT, as applicable for Turbine Components viz Casing Shaft, Blades, Casing etc. Including Piping		
8	W	-	W	H	X	Hydrostatic Test for Pressure Retaining Parts of Turbine, Wherever applicable		
9	W	-	W	H	X	Dynamic Balancing of Each Rotor & Couplings		
10	Rw	-	W	H	X	Mechanical Run out Check		
11	Rw	-	W	H	X	Over Speed Test		
12	R	-	W	H	X	Visual and Dimensional Inspection of Base Frame and Enclosure		
13	R	-	W	H	X	System Leak Test		
14	W	-	W	H	X	Final Inspection of Complete Lube Oil System Including Visual and Dimensional Checks of All Major Items (Performance)		
15	W	-	W	H	X	Oil Cleanliness Check		
16	RW	-	Rw	H	X	Protective Coating & Insulation (Final DFT and Visual Check)		

17	W	-	W	H	X	Shop Test - Mechanical Run Test for Gas Turbine and Gear Box at Manufacturer's Works
18	W	-	W	H	X	Performance Test (Factory Acceptance Test) of Complete Turbine
19	W	-	W	H	X	Vibration and Noise Test
20	W	-	W	H	X	Inspection and Testing of UCP (Unit Control Panel), LCP (Local Control Panel)
21	W	-	W	H	X	Final Inspection of the Complete assembled Turbine Including Visual and Dimensional Check and Completeness Check of All Items as per approved P&IDs and GADs
22	R		R	H	X	Manufacturing 's test certificates/ compliance and calibration certificates for bought out items like bearing, valves, probes and other instruments etc.
23	Is		R		X	Review of documents and issue of RN for Turbine
						Auxiliary Drives / Accessories - F&G System etc.
24	W	-	W	H	X	Visual and Dimensional Inspection & Tag Plate Check
25	RW	-	Rw	H	X	Panel Wiring and Instrument Check as per Drawing
26	RW	-	Rw	H	X	Functional and Calibration Check
27	RW	-	Rw	H	X	Protective Coating (Final DFT and Visual Check)
28	R		R	W	X	Manufacturing’s test certificates/ compliance and calibration certificates for bought out items like bearing, valves, probes and other instruments etc.
29	Is	-	R	H	X	Documentation Review and Issue of Inspection Release Note for Complete Package
						Complete Assembly (Turbine + Generator) at Yard
30	W	W	W	H	X	Combined String Test
31	W	W	W	H	X	Vibration and Noise Level Test
32	W	W	-		X	Verification of items as per IRN
33	W	W			X	IMIR/GIIR on the basis of IRN
33	W	W			X	SAT/Performance Test of Package in field (offshore platform) by the vendor.

***Refer Applicable Electrical IRT for Electrical Equipments/Items**

LEGENDS & NOTES : Explained Separately

FORMAT No.	Ref. PROCEDURE No.	ISSUE No.	REV. No.	REV. DATE:
ODS/SOF/004A	ODS/SOP/023	01	00	08.03.2016

ओएनजीसी ONGC	Offshore Design Section Engineering Services (ISO – 9001:2008)					INSPECTION REQUIREMENT TABLE	IRT No.	ODS/MECH/IRT/31
							Rev No	0
							Discipline	Mechanical
ITEM : DG Set (Portable)							INSPECTION CATEGORY : "B"	
Activity	1. Inspection by ONGC / Certification Agency (CA).							
		2. Inspection by ONGC / Third Party Inspection Agency (TPI).						
			3. Inspection by EPC Inspection Agency.					
				4. Inspection by Vendor / Sub Vendor.				
					5.Certificates/compliance/Data/Information to be submitted by vendor for Review/ Approval			
						6. Stages of Inspection Involved		
1	A	-	A	H	X	Inspection and Test Plan.		
2	A	-	R	H	X	FAT Procedure of complete Unit		
3	**A**	-	R	H	X	Performance / Functional Test Procedure		
4	**R**	-	R	H	X	WPS/PQR/WPQ/NDT procedures, Hydrostatic/pneumatic test procedures & Painting Procedure		
Inspection & Testing								
Diesel Engine								
5	R	-	R	H	X	Material Test Certificates / compliance for major components.		
6	R	-	R	H	X	Check shop assembly inspection records. Instruments as per approved Instrument data sheets.		
7	W	-	W	H	X	Functional Test/Performance test (as per approved data sheets / drawings, applicable code & standard). As per ONGC spec 5502 F.		
Instrumentation								
8	W	-	W	H	X	Manufacturer's TC / Certificate of conformity / calibration test (as applicable) for instruments, valves, Jb'setc.		
9	W	-	W	H	X	Records of control panel for functional / operational & shutdown logic. Control panel functional test & Logic tests for the equipment package during FAT.		
10	R	-	R	H	X	Type test certificate / conformity certificate for specified enclosure class & Hazardous Area Classification		
Diesel Day Tank & Skid								
11	**R**	-	R	H	X	Material Traceability & Review Manufacturer's Test Certificates		
12	R	-	R	H	X	Fit-up, Welding & NDT (As applicable)		
13	W	-	W	H	X	Leak testing of Diesel Tank		

14	R	-	R	H	X	NACE Confirmation as per latest MR0175 /ISO 1516 (As Applicable)
Final Complete Skid Assembly Check						
15	W	-	W	H	X	Functional/Performance Test including noise level and vibration check
16	RW	-	RW	H	X	Surface preparation & protective Coating (Visual & final DFT check as per spec 2005)
17	W	-	W	H	X	Final Visual ,dimensions , Marking check & stamping as per model number
18	Is	-	R	H	X	Final documentation (MDR) review and issue of Inspection Release Note
IMIR/GIIR at Yard/Offshore						
19	W	W	-		X	Verification of items as per IRN
20	W	W			X	IMIR/GIIR on the basis of IRN
***Refer Applicable Electrical IRT for Electrical Equipments/Items.**						
LEGENDS & NOTES : Explained Separately						

FORMAT No.	Ref. PROCEDURE No.	ISSUE No.	REV. No.	REV. DATE:
ODS/SOF/004A	ODS/SOP/023	01	00	08.03.2016

ओएनजीसी ONGC	Offshore Design Section Engineering Services (ISO – 9001:2008)					INSPECTION REQUIREMENT TABLE	IRT No.	ODS/MECH/IRT/32
							Rev No.	0
							Discipline	Mechanical
ITEM : CO2 Snuffing System							INSPECTION CATEGORY.: 'B'	
Activity	1. Inspection by ONGC / Certification Agency.(CA)							
		2. Inspection by ONGC / Third Party Inspection Agency (TPI)						
			3. .Inspection by EPC / EPC's Inspection Agency (IA)					
				4. Inspection by Vendor/ Sub Vendor				
					5.Certificates/compliance/Data/Information to be submitted by vendor for Review/ Approval			
						6. Stage of Inspection Involved		
General								
1	A	-	R	H	X	Quality Control Plan.		
2	A	-	R	H	X	FAT Procedure of complete Unit		
3	R	-	R	H	X	Review of material test certificates/compliance certificate for all major Bought Items like Valves, Pressure Gauges, Fire/Heat Detection/Sensing Device, Weighing Scale, Pressure Switches, and Actuators.		
4	R	-	R	H	X	Statutory body certificates for Hazardous area classification and Environmental protection for electrical/Instrumentation items (as applicable).		
5	R	-	R	H	X	Review of NDT Procedures, Painting and WPS, PQR and WPQT.		
Testing & Inspection								
CO_2/N_2 cylinders								
6	W	-	W	H	X	Hydro & Pneumatic test of cylinders (as applicable)		
7	R	-	W	H	X	Check final visual & dimensions of cylinders		
8	RW	-	RW	H	X	Surface preparation and protective coating as per ONGC spec 2005		
9	R	-	R	H	X	Verify certification of cylinders.		
Control Panel								
10	W	-	W	H	X	Visual/dimensional check, functional check. Control panel functional test & Logic tests for the equipment package during FAT		
11	R	-	R	H	X	Verify test certificates, certificates for specified enclosure class. Certificate of Conformity for IP/ NEMA Enclosure Class for Transmitters, Switches, Junction Boxes etc., (As applicable). Calibration certificates for instruments		
Skid structure fabrication and assembly								
12	W	-	W	H	X	Check visual and dimensional of skid structure assembly.		

13	RW	-	RW	H	X	Surface preparation and protective coating as per ONGC spec 2005
Cylinder cabinet						
14	W	-	W	H	X	Check visual & dimensional
Final Inspection						
15	W	-	W	H	X	Check interconnecting piping and component as per ONGC spec 2004A.
16	W	-	W	H	X	Check Visual and dimensional of whole skid assembly
17	RW	-	RW	H	X	Surface preparation and protective coating (Final DFT)as per ONGC spec 2005
18	W	-	W	H	X	Performance Test
Final Documentation						
19	R	-	R	H	X	Final Documentation shall include manufacturer TC's for all bought out items, raw material and stage inspection report as per the approved ITP.
20	Is	-	R	H	X	Inspection release Note
IMIR/GIIR at Yard/Offshore						
21	W	W	-		X	Verification of items as per IRN
22	W	W			X	IMIR/GIIR on the basis of IRN
LEGENDS & NOTES : Explained Separately						

FORMAT No.	Ref. PROCEDURE No.	ISSUE No.	REV. No.	REV. DATE:
ODS/SOF/004A	ODS/SOP/023	01	00	08.03.2016

ओएनजीसी ONGC	Offshore Design Section Engineering Services (ISO – 9001:2008)					INSPECTION REQUIREMENT TABLE	IRT No	ODS/MECH/IRT/33
							Rev No.	0
							Discipline	Mechanical
Item : Air Cooled Heat Exchanger							Inspection Category : "A"	
Activity No.	1. Inspection by ONGC / Certification Agency (CA)							
		2. Inspection by ONGC / Third Party Inspection Agency (TPI)						
			3. Inspection by EPC / EPC's Inspection Agency (IA)					
				4. Inspection by Vendor/ Sub Vendor				
					5. Certificates/compliance/Data/Information to be submitted by vendor for Review/ Approve			
						6. Stage of Inspection Involved		
						General		
1	A	-	R	H	X	Inspection and Test Plan		
2	A	-	R	H	X	Hydro Test Procedure, Pneumatic Test Procedure, FAT Procedure (As applicable)		
3	A	-	R	H	X	NDT Procedures, Heat Treatment Procedure, Surface Preparation and Protective Coating Procedure, Welding Procedure (As applicable)		
4	R	-	R	H	X	Material Test Certificates, Corrosion Test / Additional Test Reports as per ONGC Specification, Hazardous Area Classification and IP Certificates for E&I Items, Test Certificates of Bought Out Items, Test Records and Compliance to other PS Requirements. Calibration certificates for instruments, like vibration switch / probes. Certificate of Conformity for IP/ NEMA Enclosure Class for Transmitters, Switches, Junction Boxes etc., (As applicable)		
5	A	-	R	H	X	WPS / PQR/WPQ for heat exchanger		
6	R	-	R	H	X	Material Identification, Review of MTCs and Traceability Records (For Pressure Parts & Non Pressure Parts)		
						Inspection & Testing		
7	W	-	W	H	X	Mock-Up Test (Tube to Tube Sheet Joint)		
8	W	-	W	H	X	Visual and Dimension Inspection		
9	W	-	W	H	X	Performance Curves for Fans and Louvers / Mechanical Run Test		
10	R	-	R	H	X	Non Destructive Testing (As applicable)		
11	W	-	W	H	X	Vibration and Noise Level Test (As applicable)		
12	R	-	R	H	X	Pickling and Passivation of Corrosion Resistance Alloy (CRA), as applicable		
13	W	-	W	H	X	Pneumatic Test, Hydro Static Test (As applicable)		
14	RW	-	Rw	H	X	Protective Coating (Final DFT and Visual Check)		
15	Rw	-	Rw	H	X	Tube Sheet Inspection after Drilling		
16	W	-	W	H	X	Tubes Inspection after Finning		

17	W	-	W	H	X	Mechanical Bond Test between Fin and Tube
18	RW	-	RW	H	X	Inspection of Tube to Tube Sheet Joint (*100% DPT of Tube to Tube Sheet Joint, As applicable), Root and Final Pass DPT. Air Test (As applicable)
19	R	-	R	H	X	Review of PWHT Charts and Hardness (As applicable)
20	W	-	W	H	X	Partition Plate Check after Welding
21	W	-	W	H	X	Flushing and Drying of Tubes
22	W	-	W	H	X	Fan, Gear Boxes, Vibration Switch, etc. as per Approved Data Sheets, Drawings, PS)
23	R	-	R	H	X	Area Classification Certificates
24	W	-	W	H	X	Complete Assembly Mechanical Run Test
25	Is	-	W	H	X	Final Documentation Review and Issue of Inspection Release Note
IMIR/GIIR at Yard/Offshore						
26	W	W	-		X	Verification of items as per IRN
27	W	W			X	IMIR/GIIR on the basis of IRN
***Refer Applicable Electrical IRT for Electrical Equipments/Items**						
LEGENDS & NOTES : Explained Separately						

FORMAT No.	Ref. PROCEDURE No.	ISSUE No.	REV. No.	REV. DATE:
ODS/SOF/004A	ODS/SOP/023	01	00	08.03.2016

ओएनजीसी ONGC	Offshore Design Section Engineering Services (ISO – 9001:2008)	INSPECTION REQUIREMENT TABLE	IRT No.	ODS/MECH/IRT/34
			Rev No.	0
			Discipline	Mechanical

Item: WASTE HEAT RECOVERY UNIT (WHRU)	Inspection Category : A

ACTIVITY No	1. Inspection by ONGC / Certification Agency CA.	2. Inspection by ONGC/Third Party Inspection(TPI)	3. Inspection by EPC Inspection Agency	4. Inspection by Vendor	5. Certificates/compliance/Data/Information to be submitted by vendor for Review/ Approval.	6. STAGES OF INSPECTION INVOLVED
1	I	-	W	W	----	**Pre-Inspection Meeting (as required)**
2	A	-	R	H	X	FAT & SAT Procedure of complete Unit
3	A	-	R	H	X	Approval of QA Plan / Inspection and test plan (ITP) of vendor
						Heat Exchangers/Piping
						Before start of Fabrication
3	A	-	H	H	X	WPS and PQR Approval
4	A	-	H	H	X	Welder Qualification Records, NDT Procedure, Hydrotest procedure, Refractory lining & Dry out procedure, Painting procedure
						During Fabrication
5	W	-	W	W	X	Raw Material Identification and Marking checks for critical / pressure components only
6	RW	-	R/W	W	X	Weld joint fit-up inspection
7	RW	-	R/W	W	X	Weld visual inspection before PWHT
8	RW	-	R/W	W	X	NDE (RT, UT, MPI, DPT), PMI and Hardness - Materials & weld joints as per spec.(as applicable)
9	R	-	R	W	X	Heat treatment reports (i.e. Tube U Bend etc. as applicable)
10	R	-	R	W	X	Post Weld Heat Treatment Charts / Records for the Weld Joint (As Applicable)
11	R/W	-	W	H	X	Hydro / Pneumatic test of all pressure parts (Tubes, Channel / Head, Tube to Tube Sheet Joints etc.
12	W	-	W	W	X	Visual and Dimensional Inspection, tube length, tube diameter, gauge, flattening measurement of tube at U-bend area, Nozzles / tapping, and orientation, removal of burrs and spatters, installations of trims etc.
13	R	-	R	R	X	Code Stamping (ASME or others as specified in PS)
						Skid / Base Frame
14	W	-	W	W	X	Check final visual and dimensional

15	R/W	-	W	W	X	Check connection of all piping spools (casing connections) for drains and vents etc.
						Ducts and Diverter Valves
16	R/W	-	W	W	X	Ducts Pneumatic Testing - Leakage Rate Check
17	R/W	-	W	W	X	Leakage test from duct isolation valve / diverter valve seats at design temperature after thermal heating- (Max 1% of flow allowed)
18	W	-	W	W	X	Normal control and operation of ducts louvers / valves through pneumatic and electrical actuation
19	W	-	W	W	X	Fire safe position check of all valves
20	W	-	W	W	X	Duct material and joining details
21	W	-	W	W	X	Tube bundle assembly : Vacuum tightness test, Halide test after tube expanding
		-				**Control Panels**
22	W	-	W	W	X	Visual inspection for wiring and item layout, cable entry location, gland sizing, number of entries, indication lamps, switches and push buttons etc.
23	W	-	W	H	X	Function test as per schematic diagram and interface and performance test (through simulation of signals) Control panel functional test & Logic tests for the equipment package during FAT.
24	R	-	R	R	X	**Type Test report -** Certified by recognized/reputed Third Party
25	W	-	W	R	X	Fire rating - Insulation material (If supplied by WHRU vendor)
26	R	-	R	R	X	Hazardous area classification, intrinsic safety and IP rating certification for all instrument items. Calibration certificates for instruments. Certificate of Conformity for IP/ NEMA Enclosure Class for Transmitters, Switches, Junction Boxes etc., (As applicable). Instruments as per approved Instrument data sheets
27	RW	-	R/W	W	X	**Noise Test, Vibration Test of Complete assembled unit-** Exhaust of Turbine gases from WHRU
						Surface preparation & Painting / Coating
28	RW	-	RW	W	X	Surface preparation of vessel and structure after Blasting
29	RW	-	R/W	W	X	Painting / coating/ Insulation inspection as per ONGC spec.
30	W	-	W	H	X	Vessel internal inspection before Box-up for cleanliness and completeness
31	W	-	W	H	X	Refractory and Insulation (As Applicable)
						Other requirements
32	W	-	W	W	X	Final Visual & Dimensional Inspection, P & ID Verification
33	R/W	-	W	H	X	Performance / Functional Test of Package
34	R	-	R	R	X	Review of final documentation to comply with specification requirements
35	W	-	W	W	X	Final Package Inspection for completeness during / After packaging-tagging, preservation

36	R	-	R	R	X	Certification of vessel by Authorised inspector (if required)	
37	Is	-	R	H	X	Release Note of complete unit	
							IMIR/GIIR at Yard/Offshore
38	W	W	-	H	X	Verification of items as per IRN	
39	W	W			X	IMIR/GIIR on the basis of IRN	
40	W	W		H	X	SAT/Performance Test of Package in field (offshore platform) by the vendor	
***Refer Applicable Electrical IRT for Electrical Equipments/Items.**							
LEGENDS & NOTES : Explained Separately							

FORMAT No.	Ref. PROCEDURE No.	ISSUE No.	REV. No.	REV. DATE:
ODS/SOF/004A	ODS/SOP/023	01	00	08.03.2016

ओएनजीसी ONGC	Offshore Design Section Engineering Services (ISO – 9001:2008)			INSPECTION REQUIREMENT TABLE		IRT No.	ODS/MECH/IRT/36
						Rev No	0
						Discipline	Mechanical
Item : Nitrogen Generator Package					Inspection Category : "A"		
Activity No.	1. Inspection by ONGC / Certification Agency (CA)						
		2. Inspection by ONGC / Third Party Inspection Agency (TPI)					
			3. Inspection by EPC / EPC's Inspection Agency (IA)				
				4. Inspection by Vendor/ Sub Vendor			
					5.. Certificates/compliance/Data/Information to be submitted by vendor for Review/ Approval		
						6. Stage of Inspection Involved	
1	A	-	R	H	X	Inspection and Test Plan	
2	A	-	R	H	X	Hydrostatic Test, Performance Test, Mechanical Run Test, FAT & SAT Procedure (As applicable)	
3	R	-	R	H	X	**Welder Qualification Records (WPQR)**	
4	A	-	R	H	X	**WPS AND PQR Approval**	
						Compressor Positive Displacement	
5	R	-	R	H	X	Manufacturer's Test Certificates for Major Compressor Components	
6	R	-	R	H	X	NDT of Compressor Components, viz. Piston Rods/Cylinders, Pistons, Liners etc. (As applicable)	
7	W	-	W	H	X	Hydrostatic Test for pressure parts of compressor, component casing wherever applicable	
8	R	-	R	H	X	Static Balancing report of Flywheel	
9	W	-	W	H	X	Surface Finish Check of Piston Rods, Cylinders, Liners, Including Hardness Check (As applicable)	
10	W	-	W	H	X	Mechanical Run Test of Compressor , Drivers and Gear Units including Integral Auxiliary System Package, as per Approved Procedure (as applicable)	
11	W	-	W	H	X	Performance Test of Compressor as per **API / Manufacturer std** Approved Procedure	
12	W	-	W	H	X	Protective Coating Inspection (Final DFT and Visual Check)	
						Pressure Vessels (Interstage Receivers, Air Dryer, Coolers, Air Pre/After Filters, Pressure Swing Absorption System)	
13	R	-	R	H	X	WPS/PQR & Repair Procedure (As applicable)	
14	R	-	R	H	X	Material Identification for Pressure Parts Viz. Plates, Pipes, Flanges, Fittings, Dish Ends, Filter Elements, Heater, Fasteners etc. & Review of Test Certificates	
15	R	-	R	H	X	Weld Visual and NDT, Heat Treatment Chart (As applicable)	
16	W	-	W	H	X	Hydrostatic Test for Pressure Containing Parts (As applicable)	

17	W	-	W	H	X	Pneumatic Test for RF Pads (As applicable)	
18	R	-	R	H	X	ASME Code Stamping (As applicable)	
19	W	-	W	H	X	Ensure name plate with tag no. etc. fixed and verification of as built dossier	
20	W	-	W	H	X	Final Visual and Dimensional Check	
21	RW	-	RW	H	X	Protective Coating (As applicable)	
					X	**Connecting Piping**	
22	R	-	R	H	X	Raw Material Identification and Material Test Certificates & Records	
23	R	-	R	H	X	NDE Requirements (As applicable)	
24	W	-	W	H	X	Final Visual and Dimensional Check	
25	W	-	W	H	X	Hydrostatic Testing	
						All Instrumentation Items	
26	R	-	R	H	X	Certificate of Conformity for Specified IP / NEMA enclosure class of Panel	
27	W	-	W	H	X	Functional Test of Panels as per ONGC Specification. Instruments as per approved Instrument data sheets.	
28	R	-	R	H	X	Calibration / Functional / Manufacturers Test Certificate for Gauges, Transmitters etc. (As applicable)	
29	R	-	R	H	X	Certificate of Conformity for IP / NEMA Enclosure Class for Transmitters etc. (As applicable)	
30	R	-	R	H	X	Statutory Body Certificates for Hazardous class for all Items (As applicable)	
						All Valves and Other Instrumentation Items	
31	R	-	R	H	X	Raw Material Identification, Material Test Certificates & Records	
32	R	-	R	H	X	NDE Requirements (As applicable)	
33	RW	-	Rw	H	X	Final Visual and Dimensional Inspection	
						Structural Skid	
34	R	-	R	H	X	Material Identification, MTCs for All Structural Items	
35	W	-	R	H	X	WPS & PQR	
36	R	-	R	H	X	NDT Requirements (As applicable)	
37	W	-	W	H	X	Final Visual and Dimensional Check	
						Surface preparation & Painting / Coating and Insulation	
38	W	-	W	W	X	Surface preparation of vessel and structure after Blasting	
39	RW	-	W	W	X	Painting / coating inspection as per ONGC spec.	
40	W	-	W	H	X	Vessel internal inspection before Box-up for cleanliness and completeness	
41	W	-	W	W	X	Insulation (As Applicable) as per ONGC spec.	
						Complete Skid Assembly	

42	W	-	W	H	X	Verify / Check All Components including Piping as per P&ID	
43	W	-	W	H	X	Check Final Visual and Dimensions of Complete Assembly. Control panel functional test & Logic tests for the equipment package during FAT.	
44	W	-	W	H	X	Performance Test Including Functional Test of Instrumentation & Control	
45	RW	-	Rw	H	X	Protective Coating Inspection (Final DFT and Visual Check)	
46	Is	-	R	H	X	Final Documentation Review and Issue of Inspection Release Note	
IMIR/GIIR at Yard/Offshore							
47	W	W	-		X	Verification of items as per IRN	
48	W	W			X	IMIR/GIIR on the basis of IRN	
40	W	W		H	X	SAT/Performance Test of Package in field (offshore platform) by the vendor	
***Refer Applicable Electrical IRT for Electrical Equipments/Items.**							
LEGENDS & NOTES : Explained Separately							

FORMAT No.	Ref. PROCEDURE No.	ISSUE No.	REV. No.	REV. DATE:
ODS/SOF/004A	ODS/SOP/023	01	00	08.03.2016

ओएनजीसी ONGC	**Offshore Design Section Engineering Services (ISO – 9001:2008)**	**INSPECTION REQUIREMENT TABLE**	**IRT No.** ODS/MECH/IRT/38
			Rev No. 0
			Discipline Mechanical

ITEM : Water Maker System	**Inspection Category : "B"**

Activity No.	1. Inspection by ONGC / Certification Agency (CA)	2. Inspection by ONGC / Third Party Inspection Agency (TPI)	3. Inspection by EPC/EPC's Inspection Agency (IA)	4. Inspection by Vendor / Sub Vendor	5. Certificates/compliance/Data/Information to be submitted by vendor for Review/ Approval	Stage of Inspection Involved
						General
1	A	-	R	H	X	Inspection and Test Plan
2	A	-	R	H	X	Welding Procedures, NDT Procedures, Hydrostatic Test Procedures, Surface Preparation & Protective Coating, Heat Treatment and FAT, SAT & Commissioning Procedures
3	R	-	R	H	X	Material Identification & Correlation with MTC/ Compliance Certificate
4	R	-	R	H	X	List / Index of Documents of Manufacturing Record Book (MRB)
						Evaporator Assembly , Heat Exchangers
5	R	-	R	H	X	Material Identification & Correlation with MTC for Pressure Parts & Non-Pressure Parts
6	R	-	R	H	X	WPS & PQR
7	W	-	W	H	X	Long Seam & Circ Seam Set Up for Shell & Fit-Up with Dish Ends, Check for Nozzle Orientation and Fit-Up
8	R	-	R	H	X	Tube to Tube Sheet Joint - Mock-Up Procedure Qualification report
9	W	-	W	H	X	Visual, Check for Tubes Expansion, NDT on Tube to Tube Sheet Weld Joints (As applicable) and RT films review
10	R	-	R	H	X	Heat Treatment Charts & Hardness Check on Welds (As applicable), Check for Dimensions of Tube Sheet Before & After Drilling and Dimensional & Hardness Check of Dish Ends (Heads)
11	W	-	W	H	X	Check for Leak Test on Tube Sheet with Tube Bundle
12	W	-	W	H	X	Check Final Assembly with Headers / Channel Covers
13	W	-	W	H	X	Pneumatic Test for RF Pads
14	W	-	W	H	X	Hydrostatic Test of Shell Side & Tube Bundle Side
15	RW	-	Rw	H	X	Protective Coating (Final DFT & Visual Check)
16	W	-	W	H	X	Marking/ Tagging & ASME Code Stamping with Certification

						RO Membrane skid with Cleaning system
17	R	-	R	H	X	Material Identifications against manufacturer's test certificates of RO membrane(as per WHO standards),all major components of motor drive pump, motor, tank, piping, valves, instrumentation, hoses etc. in compliance with ONGC spec., Approved Data Sheets, Drawings and applicable Piping Material Specification
18	R'W	-	RW	H	X	Fit-Up, Visual & NDT Checks, As applicable
19	W	-	W	H	X	Final Visual & Dimensional Check as per Approved Drawings
20	W	-	W	H	X	Verify / Check all components as per P&ID / Drawings
21	W	-	W	H	X	Check all connecting Piping as per P&ID / Drawings
						Instrumentation Items
22	R/W	-	R/W	H	X	Material TC Review, Functional Test for Instrument Items (As applicable)
23	R	-	R	H	X	Test Reports & Calibration Records for all Instruments. Calibration certificates for instruments, Certificate of Conformity for IP/ NEMA Enclosure Class for Transmitters, Switches, Junction Boxes etc., (As applicable). Instruments as per approved Instrument data sheets.
24	R	-	R	H	X	Manufacturers Inspection / Test Reports
25	R	-	R	H	X	NACE Certificate for Sour Service
26	R	-	R	H	X	NDE Requirements (*100% Review for RT Films by LIA) (As applicable)
27	R	-	R	H	X	Certificate for Degree of Protection for Equipment Enclosure
28	RW	-	RW	H	X	Functional / Routine / Type / Range / Calibration Test for Gauges, Indicators, Transmitters and other Instruments
						Piping & Structural Skid
29	R	-	R	H	X	Raw Materials Test Certificates for Major Sections, All Piping Items
30	R	-	R	H	X	WPS, PQR
31	R	-	R	H	X	NDT Checks, as applicable for Structures
32	RW	-	Rw	H	X	Hydrostatic & Pneumatic Test Reports for all Valves
33	RW	-	Rw	H	X	Flushing & Hydrostatic Test of Piping Loops & Spools (As applicable)
34	RW	-	Rw	H	X	Final Visual & Dimensional Check
						Complete Skid Assembly
35	W	-	W	H	X	System Integrity Test for the Complete Metering System at Vendor Works
36	W	-	W	H	X	FAT-System Functional Test / Simulation Test and Verification of Metering Skid, Metering Panel as per Approved PS / Data Sheet. 4 Hour Performance Test Including Functional Test of Instrumentation & Control Control panel functional test & Logic tests for the equipment package during FAT
37	W	-	W	H	X	Verify / Check all Components as per P&ID
38	W	-	W	H	X	Check all Connecting Piping as per P&ID

39	W	-	W	H	X	Final Visual & Dimensional Check of Complete Assembly
40	RW	-	Rw	H	X	Protective Coating (Final DFT & Visual Check)
41	Is	-	R	H	X	Final Documentation Review and Issue of Inspection Release Note
IMIR/GIIR at Yard/Offshore						
42	W	W	-		X	Verification of items as per IRN
43	W	W			X	IMIR/GIIR on the basis of IRN
44	W	W		H	X	SAT/Performance Test of Package in field (offshore platform) by the vendor
***Refer Applicable Electrical IRT for Electrical Equipments/Items**						
LEGENDS & NOTES : Explained Separately						

FORMAT No.	Ref. PROCEDURE No.	ISSUE No.	REV. No.	REV. DATE:
ODS/SOF/004A	ODS/SOP/023	01	00	08.03.2016

ओएनजीसी ONGC	Offshore Design Section Engineering Services (ISO – 9001:2008)			INSPECTION REQUIREMENT TABLE		IRT No.	ODS/MECH/IRT/40
						Rev No.	0
						Discipline	Mechanical
ITEM : GDU System						INSPECTION CATEGORY : 'A'	
Activity	1. Inspection by ONGC / Certification Agency.(CA)						
		2. Inspection by ONGC / Third Party Inspection (TPI)					
			3.Inspection by EPC / EPC Inspection Agency (IA)				
				4. Inspection by Vendor/ Sub Vendor			
					5. Certificates/compliance/Data/Information to be submitted by vendor for Review/ Approval		
						6. Stage of Inspection Involved	
1	A	-	R	H		Quality Control Plan.	
2	A	-	A	H		Submission of WPS/PQR/WPQ and Procedures for NDT, Heat Treatment, Cladding, Surface Preparation & Paint Coating including NDT Operators qualification records.	
3	A	-	A	H		Submission of FAT & SAT Procedures.	
4	R	-	R	H		Statutory body certificates for Hazardous Area classification and Environmental protection for Instrumentation Items as applicable/approved PS	
5	R	-	R	H		Material Test Certificates / Confirmations for Chemical, Physical, Corrosion properties as per applicable Specifications / NACE as per approved PS and ONGC functional Specs.	
6	RW	-	RW	H		Material identification and Correlation of all pressure parts including Internals as per approved Drawing, PS and Data sheets.	
						INLET SCRUBBER , GLYCOL CONTACTOR , GLYCOL FLASH DRUM , GLYCOL SURGE DRUM , STILL COLUMN , STRIPPING COLUMN , CARTRIDGE FILTERS , ACTIVATED CARBON FILTER , SUPPLY GAS SCRUBBER		
7	RW	-	RW	H		Long Seam & Cir Seam set up for shell & fit up with dish ends	
8	RW	-	RW	H		Fit up & Orientation of Nozzles	
9	RW	-	RW	H		NDT Check Viz RT/UT/MT/PT as applicable per data sheet & specs.	
10	R	-	R	H		Post Weld Heat treatment Charts as applicable & Hardness check on weld if applicable.	
11	Rw	-	Rw	H		Check Final Visual & Dimensional	
12	Rw	-	Rw	H		Check Internals	
13	Rw	-	Rw	H		Pneumatic Test for RF Pads	
14	W	-	W	H		Hydro Static test	
15	RW	-	RW	H		Surface Preparation & Protective Coating as per Contract Specification	
16	W	-	W	H		Marking & Tagging	
17	W		W	H		ASME "U" Code stamping & certification as applicable	
18	W	-	W	H		Internal Surface Preparation & Coating / Lining As Applicable.	
						LEAN GLYCOL EXCHANGERS	
19	RW	-	Rw	H		Long Seam & Cir Seam set up for shell & fit up with dish ends	
20	W	-	W	H		Tube to Tube Sheet Mock Up Test if applicable	

21	RW	-	Rw	H		NDE for Welds as applicable.
22	RW	-	Rw	H		Heat Treatment Charts & Hardness check on welds if applicable.
23	Rw	-	W	H		Check orientation of Nozzles
24	RW	-	Rw	H		Check for dimension of Tube Sheet before & after Drilling.
25	W	-	W	H		Dimensional & Hardness check of Dish Ends (Heads).
26	W	-	W	H		Check for Leak Test on tube sheet with tube bundle.
27	W	-	W	H		Check final Assembly with headers/ channel covers.
28	W	-	W	H		Pneumatic Test for RF Pads
29	W	-	W	H		Hydro Static test of Shell side & Tube bundle side.
30	RW	-	RW	H		Surface Preparation & Protective Coating as per Contract Specification
31	W	-	W	H		Check of Insulation if applicable.
32	W	-	W	H		Check Marking/Tagging & ASME Code Stamping with Certification as applicable per Datasheets.
						GLYCOL PUMPS
33	W	-	W	H		Hydrostatic Test for Pump casing
34	W	-	W	H		Performance Test.
35	W	-	W	H		Noise & Vibration Level Check.
36	W	-	W	H		NPSH Test, If Required.
37	W	-	W	H		Dynamic balancing of shaft and rotor.
38	RW	-	Rw	H		NDE Requirements.
39	Rw	-	Rw	H		Visual & Dimensional Check.
40	RW	-	RW	H		Surface Preparation & Protective Coating as per Contract Specification
41	R	-	R	H		Check of Final Submission of Drawings & Documents of Inspection Records, Test Certificates.
						STRUCTURAL SKID
42	R	-	R	H		Raw Materials Test Certificates for Major Sections
43	R	-	R	H		NDT checks as per applicable for structures
44	W	-	W	H		Final Visual & Dimensional Check.
						PIPING
45	R	-	R	H		Materials Test Certificates / Reports for all Piping Items.
46	R	-	R	H		Hydro & Pneumatic Test Reports for all Valves.
47	W	-	W	H		Flushing & Hydro test of Piping loops & spools as applicable
						INSTRUMENTATION
48	R	-	R	H		Manufacturers Inspection / Test Reports
49	R	-	R	H		Calibration certificates for instruments, Certificate of Conformity for IP/ NEMA Enclosure Class for Transmitters, Switches, Junction Boxes etc., (As applicable). Instruments as per approved Instrument data sheets.
50	R	-	R	H		Relief Valve Tests.
51	R	-	R	H		Certificates for Specified Enclosure class / Area classification as per Spes Datasheets.
52	R	-	R	H		Test Reports & calibration records for all instruments.
						FINAL ASSEMBLY
53	W	-	W	H		Verify / Check all components, insulation, colour coding,flow direction marking etc.as per P&ID.
54	W	-	W	H		Check Final Visual & Dimensional

55	RW	-	RW	H		Check for Protective Coating as per Contract Specification (Final DFT) , Asthetic View for workmanship.
56	W	-	W	H		FAT-System functional test as per approved PS / Data sheet. Including Functional Test of Instrumentation & Control & Hard Stamping on material for Identification at site/offshore.
57	Is	-	R	H		Reviewing of Final Documentation/Dossier.
IMIR/GIIR at Yard/Offshore						
58	W	W	-		X	Verification of items as per IRN
59	W	W			X	IMIR/GIIR on the basis of IRN
40	W	W		H	X	SAT/Performance Test of Package in field (offshore platform) by the vendor
***Refer Applicable Electrical IRT for Electrical Equipments/Items**						
LEGENDS & NOTES : Explained Separately						

FORMAT No.	Ref. PROCEDURE No.	ISSUE No.	REV. No.	REV. DATE:
ODS/SOF/004A	ODS/SOP/023	01	00	08.03.2016

ओएनजीसी ONGC	**Offshore Design Section Engineering Services (ISO – 9001:2008)**	**INSPECTION REQUIREMENT TABLE**	**IRT No.**	ODS/MECH/IRT/41
			Rev No.	0
			Discipline	Mechanical

ITEM : Gas Sweetening & Regeneration Package | INSPECTION CATEGORY : 'A'

Activity	1. Inspection by ONGC / Certification Agency.(CA)	2. Inspection by ONGC / Third Party Inspection Agency (TPI)	3.Inspection by EPC / EPC Inspection Agency (IA)	4. Inspection by Vendor/ Sub Vendor	5. Certificates/compliance/Data/Information to be submitted by vendor for Review/ Approval	6. Stage of Inspection Involved
1	A	-	R	H	X	Quality Control Plan
2	A	-	A	H	X	Submission of WPS/PQR/WPQ and Procedures for NDT, Heat Treatment, Cladding, Surface Preparation & Paint Coating including NDT Operators qualification records.
3	A	-	A	H	X	Submission of FAT & SAT Procedures.
4	R	-	R	H	X	Statutory body certificates for Hazardous Area classification and Environmental protection for Instrumentation Items as applicable/approved PS
5	R	-	R	H	X	Material Test Certificates / Confirmations for Chemical, Physical, Corrosion properties as per applicable Specifications / NACE as per approved PS and ONGC functional Specs.
6	RW	-	RW	H	X	Material identification and Correlation of all pressure parts including Internals as per approved Drag/PS and Data sheets.
						AMINE ABSORBER, FLASH DRUM,SCRUBBER,FILTERS, REACTIVATOR,ACCUMULATORS, KNOCK OUT DRUMS
7	RW	-	RW	H	X	Long Seam/Cirseam Joint fit ups (Shell to Shell, Shell to Dished end and)
8	Rw	-	W	H	X	Dimensional & NDT (DPT/MPT) check for Dished ends.
9	W	-	W	H	X	Check for Nozzles orientation and fit-ups.
10	Rw	-	Rw	H	X	Visual & NDT check for weld joints as applicable.
11	RW	-	RW	H	X	Post Weld Heat treatment records/charts & Hardness check on weld and parent material as applicable.
12	W	-	W	H	X	Fitment and alignment of Internals as per Approved Drgs/ Data sheets.
13	W	-	W	H	X	Pneumatic Test for RF Pads
14	W	-	W	H	X	Final Visual, Dimensional check.
15	W	-	W	H	X	Hydro Static pressure test.
16	W	-	W	H	X	Internal Surface Preparation & internal lining as applicable.
17	Rw	-	Rw	H	X	Surface Preparation & Protective Coating application as per Contract Specification
18	Rw	-	W	H	X	Check for final paint coating DFT and Assthetic view for workmanship.
19	W	-	W	H	X	ASME "U" Code stamping & certification as applicable
						HEAT EXCHANGERS, REBOILERS
20	RW	-	Rw	H	X	Long Seam & Cir Seam set up for shell & fitup with dish ends
21	W	-	W	H	X	Check for Nozzle orientation and fit-up.
22	W	-	W	H	X	Tube to Tube Sheet MockUp Test if applicable

23	Rw	-	Rw	H	X	Visual & NDT check for weld joints as applicable.
24	W	-	W	H	X	Check for Tubes expansion and NDT on Tube to Tube sheet weld joints.
25	RW	-	Rw	H	X	Heat Treatment Charts & Hardness check on welds as applicable.
26	W	-	W	H	X	Check for dimension of Tube Sheet before & after Drilling.
27	Rw	-	W	H	X	Dimensional & Hardness check of Dish Ends (Heads).
28	W	-	W	H	X	Check for Leak Test on tube sheet with tube bundle.
29	W	-	W	H	X	Check final Assembly with headers/ channel covers.
30	W	-	W	H	X	Pneumatic Test for RF Pads
31	W	-	W	H	X	Hydro Static test of Shell side & Tube bundle side.
32	Rw	-	Rw	H	X	Surface Preparation & Protective Coating as per Contract Specification
33	W	-	W	H	X	Check Marking/Tagging & ASME Code Stamping with Certification as applicable per Datasheets.
						PUMPS (AMINE PUMPS, ANTI FOAM PUMP, BOOSTER PUMPS ETC.)
34	W	-	W	H	X	Dynamic balancing of shaft and rotor (as applicable).
35	R	-	R	H	X	NDE on Castings & welds as applicable.
36	W	-	W	H	X	Hydrostatic Test for Pump Casing.
37	W	-	W	H	X	Performance Test including Noise & Vibration level check.
38	W	-	W	H	X	NPSH Test (if applicable as per Data sheet).
39	W	-	W	H	X	Visual & Dimensional Check.
42	RW	-	RW	H	X	Surface Preparation & Protective Coating as per Contract Specification
						PIPING & STRUCTURAL SKID
43	R	-	R	H	X	Raw Materials Test Certificates for Major Sections
44	R	-	R	H	X	NDT checks as per applicable for structures
45	Rw	-	W	H	X	Final Visual & Dimensional Check.
46	R	-	R	H	X	Materials Test Certificates / Reports for all Piping Items.
47	Rw	-	Rw	H	X	Hydro & Pneumatic Test Reports for all Valves.
48	W	-	W	H	X	Flushing & Hydro test of Piping loops & spools as applicable
						INSTRUMENTATION
49	R	-	R	H	X	Manufacturers Inspection / Test Reports
50	R	-	R	H	X	Calibration certificates for instruments, Certificate of Conformity for IP/ NEMA Enclosure Class for Transmitters, Switches, Junction Boxes etc., (As applicable). Instruments as per approved Instrument data sheets.
51	R	-	R	H	X	Type test Certificates.
52	R	-	R	H	X	Test Reports & calibration records for all instruments.
						FINAL ASSEMBLY
53	W	-	W	H	X	Verify / Check all components, insulation, colour coding, flow direction marking etc.as per P&ID.
54	W	-	W	H	X	Check Final Visual & Dimensional
55	RW	-	RW	H	X	Check for Protective Coating as per Contract Specification (Final DFT) , Asthetic View for workmanship.
56	W	-	W	H	X	FAT-System functional test as per approved PS / Data sheet. Including Functional Test of Instrumentation & Control & Hard Stamping on material for Identification at site/ offshore.
57	Is	-	R	H	X	Reviewing of Final Documentation/Dossier & issue of IRN

IMIR/GIIR at Yard/Offshore						
58	W	W	-		X	Verification of items as per IRN
59	W	W			X	IMIR/GIIR on the basis of IRN
59	W	W		A	X	SAT/Performance Test of Package in field (offshore platform) by the vendor.
***Refer Applicable Electrical IRT for Electrical Equipments/Items**						
LEGENDS & NOTES : Explained Separately						

FORMAT No.	Ref. PROCEDURE No.	ISSUE No.	REV. No.	REV. DATE:
ODS/SOF/004A	ODS/SOP/023	01	00	08.03.2016

ओएनजीसी ONGC	Offshore Design Section Engineering Services (ISO – 9001:2008)			INSPECTION REQUIREMENT TABLE	IRT No.	ODS/MECH/IRT/42
					Rev. No.	0
					Discipline	Mechanical
Item: HP & LP Flare Tip				Inspection Category : B		

ACTIVITY	1. Inspection by ONGC / Certification Agency CA.	2. Inspection by ONGC/Third Party Inspection Agency (TPI)	3.Inspection by EPC / EPC Inspection Agency (IA)	4. Inspection by Vendor/ Sub vendor	5. Certificate / Data to be submitted by vendor for review/approval.	6. STAGES OF INSPECTION INVOLVED.
No						
1	A	----	R	H	X	Inspection and Test Plan (ITP)
2	A	-	R	H	X	FAT Procedure of complete Unit
						General Requirements (As applicable)
3	R	----	R	H	X	Noise Level Design Report
4	R	----	R	H	X	Radiation Level Design Report
						Before Start of Fabrication
5	A		R	H	X	WPS/PQR and WPQ
						During Fabrication
6	R/W	----	R/W	H	X	Material Identification & MTC review
7	RW	----	R/W	H	X	Visual & Dimensional Inspection
8	R	----	R/W	H	X	NDT (RT, PT), PMI, etc. as per spec.(100% review of RT films by TPI & at random by CA)
9	RW	----	RW	H	X	Hydro test- as applicable
						Instruments Items
10	RW	----	R/W	H	X	Type, Range, Model, Connection type/ size, Tagging
11	W	----	W	H	X	Final Visual & Dimensional Inspection, P&ID Verification, Calibration certificates for instruments, Certificate of Conformity for IP/ NEMA Enclosure Class for Transmitters, Switches, Junction Boxes etc., (As applicable). Instruments as per approved Instrument data sheets. Control panel functional test & Logic tests for the equipment package during FAT
						Other Requirements
12	R	----	R	H		Review of Test Procedures & Reports
13	R	----	R	H	X	Review of Final Documentation to comply with spec. requirements
14	W	----	W	H	X	Final Packing inspection for completeness during / after packing-tagging, preservation, packing including spares
15	Is	----	R	H	X	Issue of Inspection Release Note
IMIR/GIIR at Yard/Offshore						
16	W	W			X	Verification of items as per IRN

17	W	W			X	IMIR/GIIR on the basis of IRN
***Refer Applicable Electrical IRT for Electrical Equipments/Items**						
LEGENDS & NOTES : Explained Separately						

FORMAT No.	Ref. PROCEDURE No.	ISSUE No.	REV. No.	REV. DATE:
ODS/SOF/004A	ODS/SOP/023	01	00	08.03.2016

ओएनजीसी ONGC	**Offshore Design Section Engineering Services (ISO – 9001:2008)**	**INSPECTION REQUIREMENT TABLE**	**IRT No.** **ODS/MECH/IRT/43** **Rev No.** **0** **Discipline** **Mechanical**

ITEM : Travelling Bridge Crane / Electric Hoist | **Inspection Category : "B"**

Activity No.	1. Inspection by ONGC / Certification Agency (CA)	2. Inspection by ONGC / Third Party Inspection Agency (TPI)	3. Inspection by EPC Inspection Agency	4. Inspection by Vendor / Sub Vendor	5. Certificates/compliance/Data/Information to be submitted by vendor for Review/ Approval.	6. Stage of Inspection Involved
						General
1	A	-	R	H	X	Inspection and Test Plan
2	A	-	R	H	X	Factory Acceptance Test Procedure (FAT)
3	R	-	R	H	X	Material Test Certificates, Hazardous Area Classification & IP Certificates, Type Test, Routine Test & Area classification Certificates for E&I Items, Test Certificates of Bought out Items, Test Records & Compliance to other PS Requirements
4	R	-	R	H	X	NDT Procedures, Heat Treatment Procedures, Surface Preparation & Protective Coating Procedures, WPS/ PQR
						Fabrication of Girders
5	R	-	R	H	X	Material Identification & Correlation with MTC
6	R/W	-	R/W	H	X	Weld Visual, Dimensional & NDT Check (As applicable)
						Assembly
7	RW	-	Rw	H	X	Check for Individual End-Carriage Wheel Alignment, Dimensional & Long Travel Speed, Camber, Cross Travel Rail Alignment, Span & Diagonals etc.
8	RW	-	Rw	H	X	Main Girders with End-Carriage Assembly Check
						Testing
9	W	-	W	H	X	Load Test (Full Load & Over Load) & Factory Acceptance Test (FAT)
10	RW	-	Rw	H	X	Protective Coating (Final DFT & Visual Check)
11	Is	-	R	H	X	Final Documentation Review and Issue of Inspection Release Note
IMIR/GIIR at Yard/Offshore						
12	W	W	-		X	Verification of items as per IRN
13	W	W			X	IMIR/GIIR on the basis of IRN

***Refer Applicable Electrical IRT for Electrical Equipments/Items.**

LEGENDS & NOTES : Explained Separately

FORMAT No.	Ref. PROCEDURE No.	ISSUE No.	REV. No.	REV. DATE:
ODS/SOF/004A	ODS/SOP/023	01	00	08.03.2016

ओएनजीसी ONGC	Offshore Design Section Engineering Services (ISO – 9001:2008)					INSPECTION REQUIREMENT TABLE	IRT No. ODS/MECH/IRT/44 Rev No 0 Discipline Mechanical
Item : **Jet Fuel System & ATF Pump**							**Inspection Category : "A"**
Activity No.	**1. Inspection by ONGC / Certification Agency (CA)**						
		2. Inspection by ONGC / Third Party Inspection (TPI)					
			3. Inspection by EPC Inspection Agency (IA)				
				4. Inspection by Vendor / Sub Vendor			
					5. Certificates/compliance/Data/Information to be submitted by vendor for Review/ Approval		
					6. Stage of Inspection Involved		
						General	
1	A	-	R	H	X	Inspection and Test Plan	
2	R	-	R	H	X	Material Identification, Material Test Certificates and Records	
3	A	-	R	H	X	Hydro Test Procedure, FAT Procedure, Pneumatic Test Procedure (As applicable)	
4	A	-	R	H	X	NDT Procedures, Heat Treatment Procedure, Surface Preparation and Protective Coating Procedure, Welding Procedure,	
5	R	-	R	H	X	Statutory Body Certificates for Hazardous Area Classification and Environmental Protection for Instrumentation Items (as applicable)	
6	R	-	R	H	X	List/Index of Documents which will be part of Final Submission as Manufacturing Record Book (MRB)	
						Inspection & Testing	
						ATF STORAGE TANKS/REFUELLING VESSELS & FILTER COALESCER	
7	R	-	R	H	X	WPS/PQR/WPQ & REPAIR REPORTS (As Applicable)	
8	W	-	W	H	X	Material Identification for Pressure Parts Viz. Plates, Pipes, Flanges, Fittings, Dish Ends, Filter Elements, Heater, Fasteners etc. & Review of Test Certificates.	
9	RW	-	RW	H	X	Stage inspection Viz. Shell/Dish Set up, Root/Back chip D.P, Nozzle Set up, Dimensional Check/DP check of Dish Ends, Tube Sheet Inspection, Piping Assembly, as applicable.	
10	R/W	-	R/W	H	X	Weld Visual and NDT(RT/UT/MPT/PT) as applicable	
11	R	-	R	H	X	Heat treatment, As applicable.	
12	W	-	W	H	X	Hydrostatic Test for Pressure Containing Parts.	
13	RW	-	RW	H	X	Pneumatic Test As Applicable	
14	W	-	W	H	X	Final Visual, Dimensional Inspection & internal checks.	
15	RW	-	RW	H	X	Surface preparation and Protective Coating.	
						INSTRUMENTATION ITEMS	

16	R	-	R	H	X	Manufacturer's Test Certificates / Compliances for Control Panel, transmitters, Digital metering system etc.
17	RW	-	W	H	X	Functional check for control panels. Instruments as per approved Instrument data sheets
18	R	-	R	H	X	Hazardous area classification of equipments by BASEEFA, UL or Equivalent as applicable. Control panel functional test & Logic tests for the equipment package during FAT
19	R	-	R	H	X	Calibration reports / test certificates / compliances (as applicable) for all items
20	R	-	R	H	X	Enclosure classification and IP Certificates (As applicable)
						TRANSFER PUMPS
21	R	-	R	H	X	Manufacturer's Test Certificates / Compliance Certificates for major components including bought out items.
22	R	-	R	H	X	NDT of pump components & piping as required.in specs.
23	RW	-	RW	H	X	Bought out items.
24	W	-	W	H	X	Visual check of major components before assembly.
25	W	-	W	H	X	Hydro static testing of pump casing.
26	W	-	W	H	X	NPSH Test (if applicable).
27	W	-	W	H	X	Performance & mechanical run test at rated RPM.
28	W	-	W	H	X	Noise and vibration compliance reports.
29	W	-	W	H	X	Final inspection of pump
30	RW	-	RW	H	X	Surface preparation and Protective Coating.
						CONNECTING VALVE PIPING AND HOSE CONNECTION
31	R	-	R	H	X	Material Test Certificates and Records.
32	R	-	R	H	X	Raw Material Identification.
33	R/W	-	R/W	H	X	NDE Requirements (RT/UT/MPI/DPT - As Applicable)
34	W	-	W	H	X	Final, Visual, Dimensional Inspection
35	W	-	W	H	X	Hydro Testing.
						STRUCTURAL SKID
36	R	-	R	H	X	Review of MTCs for All Structural Items.
37	R	-	R	H	X	Review of WPSs, PQRs and WPQs.
38	R	-	R	H	X	NDT as application
39	W	-	W	H	X	Check Final Visual and Dimensions
						SKID ASSEMBLY IN TOTAL
40	RW	-	RW	H	X	Verify / Check All components including Piping as per P & ID.
41	W	-	W	H	X	Check Final Visual and Dimensions of complete assembly.

42	W	-	W	H	X	System integrity test for the complete metering system as per approved PS / Data sheet at vendor's place.
43	W	-	W	H	X	FAT - System functional test / Simulation test and verification of metering skid, metering panel as per approved PS / Data sheet.
44	RW	-	RW	H	X	Surface preparation and Protective Coating.
45	R	-	R	H	X	Review of Final Documents.
IMIR/GIIR at Yard/Offshore						
46	W	W	-		X	Verification of items as per IRN
47	W	W			X	IMIR/GIIR on the basis of IRN
***Refer Applicable Electrical IRT for Electrical Equipments/Items.**						
LEGENDS & NOTES : Explained Seperatetely						

FORMAT No.	Ref. PROCEDURE No.	ISSUE No.	REV. No.	REV. DATE:
ODS/SOF/004A	ODS/SOP/023	01	00	08.03.2016

ओएनजीसी ONGC	Offshore Design Section Engineering Services (ISO – 9001:2008)			INSPECTION REQUIREMENT TABLE			IRT No.	ODS/MECH/IRT/45
							Rev. No.	0
							Discipline	Mechanical
ITEM : **Diesel Centrifuge**							**Inspection Category : "B"**	
Activity No.	**1. Inspection by ONGC / Certification Agency (CA)**							
		2. Inspection by ONGC / Third Party Inspection Agency (TPI)						
			3. Inspection by EPC Inspection Agency					
				4. Inspection by Vendor / Sub Vendor				
					5. Certificates/compliance/Data/Information to be submitted by vendor for Review/ Approval			
						6. Stage of Inspection Involved		
1	A	-	A	H	X	Inspection and Test Plan		
2	RW	-	RW	H	X	Material Identification, Material Test Certificates and Traceability Records		
Diesel Centrifuge								
	R	-	R	H	X	MTC Review, Traceability Check & inspection of Individual Components		
3	RW	-	Rw	H	X	Final Visual & Dimensional Check		
4	W	-	W	H	X	Leakage Test, Performance Test		
5	W	-	W	H	X	Separation Efficiency, Diesel Outlet Pressure, Operation Check, Capacity, Noise and Vibration Check		
6	R	-	R	H	X	Type Test Report for Hazardous area classification		
Feed Pumps								
8	R	-	R	H	X	MTC Review, Traceability Check & inspection of Individual Components		
9	R	-	R	H	X	Rotor Dynamic Balancing		
10	RW	-	RW	H	X	Hydrostatic Test for Casing & Piping		
11	W	-	W	H	X	Performance Test, String Test, Strip Down Test, Noise and Vibration Level Check		
12	R	-	R	H	X	Type Test REPORT for Hazardous Area Classification		
Control Panel and Instrumentation Items								
13	W	-	W	H	X	Check Functional, Simulation & Calibration Test for all applicable components, HV / IR Test, Type Test Reports for Enclosure Protection, Test Certificates Records for Components Viz MCCB etc.		
14	W	-	W	H	X	Final Visual & Dimensional Check, Calibration certificates for instruments, Certificate of Conformity for IP/ NEMA Enclosure Class for Transmitters, Switches, Junction Boxes etc., (As applicable). Instruments as per approved Instrument data sheets.		
15	W	-	W	H	X	Logic & Scheme Check of Control System Inclusive of Control Panel		
16	R	-	R	H	X	Bill of Material Check Up		

Valves (PSV, PCV etc.)						
17	R	-	R	H	X	Material Test Certificates for Valve Body, Trim Components etc.
18	R	-	R	H	X	NDT Examination Records
19	RW	-	RW	H	X	**Routine Tests Consists of :**
20	W		W	H	X	Visual and Dimensional Check of all Assembled Valves with Accessories
21	RW		RW	H	X	Hydrostatic Test for Body, Nozzle etc. (As applicable)
22	RW		RW	H	X	Functional Checks (Operation, Valve Lift, Set Pressure Test, as applicable)
23	R		R	H	X	Type Test REPORT Certificates (As applicable)
24	R		R	H	X	Certificates for Hazardous Area Classification & Enclosure Class for Applicable Items
Skid Piping Fabrication						
25	R	-	R	H	X	WPS, PQR for Structural Welding
26	W	-	W	H	X	Final Visual & Dimensional Check
27	R	-	R	H	X	NDE Requirements
28	RW	-	W	H	X	Leak Test of Tanks, Final Performance Test for Whole Unit in Assembled Condition
29	RW	-	RW	H	X	Protective Coating (Final DFT and Visual Check)
30	Is	-	R	H	X	Final Documentation Review and Issue of Inspection Release Note
IMIR/GIIR at Yard/Offshore						
31	W	W	-		X	Verification of items as per IRN
32	W	W			X	IMIR/GIIR on the basis of IRN
***Refer Applicable Electrical IRT for Electrical Equipments/Items**						
LEGENDS & NOTES : Explained Separately						

FORMAT No.	Ref. PROCEDURE No.	ISSUE No.	REV. No.	REV. DATE:
ODS/SOF/004A	ODS/SOP/023	01	00	08.03.2016

	Offshore Design Section Engineering Services (ISO – 9001:2008)	INSPECTION REQUIREMENT TABLE	IRT No.	ODE/MECH/IRT/46
			Rev. No.	0
			Discipline	Mechanical

ITEM : Monorail (Electric) Hoist						Inspection Category : B
Activity No.	1. Inspection by ONGC / Certification Agency (CA).	2. Inspection by ONGC / Third Party Inspection Agency (TPI)	3. Inspection by EPC / EPC's Inspection Agency (IA)	4. Inspection by Vendor/Sub Vendor	5. Certificates/compliance/Data/Information to be submitted by vendor for Review/ Approval.	6. STAGES OF INSPECTION INVOLVED.
1	A	-	R	H	X	Approval of Inspection & Test Plan (ITP) and FAT & SAT procedure of the complete unit from vendor.
						General Inspection :
2	RW	-	RW	W	X	Visual Inspection, Verification for model, range, Name plate/ Tag plate, etc.
3	RW	-	RW	W	X	Dimensional Inspection, Alignment, etc.
4	RW	-	RW	W	X	Hook and wire rope- material and safe working load(SWL) test certificate and NDT as applicable
5	RW	-	RW	W	X	Wire rope lubrication, inspection for any kinks, cuts, breaks or crushing of strands etc.
6	RW	-	RW	W	X	Length of wire rope (minimum two turns on rope drum when lowered to the maximum)
						Performance Test :
7	RW	-	RW	W	X	Vibration measurement.
8	RW	-	RW	W	X	Static load test and overload test (as per Code and Specification), followed by NDT of critical components for any damage.
9	W	-	W	W	X	Lowering/Descend and hoisting speed and measurement of current under full load.
10	W	-	W	W	X	Hoisting limit switches setting and function test.
11	W	-	W	W	X	Lift and reach check
12	W	-	W	W	X	Centrifugal brake check - to stop over speeding during lowering.
13	W	-	W	W	X	Manual cranking for hoisting - in case of electrical failure.
14	R	-	R	W	X	Review of final documentation to comply with specification requirements.
15	Rw	-	Rw	W	X	Surface preparation & protective coating (Visual & Final paint DFT check as per 2005 spec.).
16	W	-	W	W	X	FAT of the complete unit
17	RW	-	W	W	X	Final package inspection for completeness during / after packaging - tagging, preservation, packing including spares.
18	Is		R	H	X	Review of Docs & Inspection Release note.

Note1: Refer Applicable Electrical IRT for Electrical Equipments/Items.
Note2: LEGENDS & NOTES: Explained separately

	Offshore Design Section Engineering Services (ISO – 9001:2008)	INSPECTION REQUIREMENT TABLE	IRT No.	ODE/MECH/IRT/46
			Rev. No.	0
			Discipline	Mechanical

IMIR/GIIR at Yard/Offshore						
19	W	W	-		X	Verification of items as per IRN
20	W	W			X	IMIR/GIIR on the basis of IRN
21	W	W		H	X	SAT/Offshore Pre-commissioning, Commissioning &Testing at offshore.

Note1: Refer Applicable Electrical IRT for Electrical Equipments/Items.
Note2: LEGENDS & NOTES: Explained separately

ओएनजीसी ONGC	Offshore Design Section Engineering Services (ISO – 9001:2008)		INSPECTION REQUIREMENT TABLE		IRT No.	ODS/MECH/IRT/47
					Rev. No.	0
					Discipline	Mechanical
Item: FILTERS				Inspection Category : A		
ACTIVITY	1. Inspection by ONGC / Certification Agency CA.					
		2. Inpection by ONGC/Third Party Inspection Agency (TPI)				
			3.Inspection by EPC / EPC Inspection Agency (IA)			
				4. Inspection by Vendor/sub vendor		
				5. Certificates/compliance/Data/Information to be submitted by vendor for Review/ Approval.		
No						6. STAGES OF INSPECTION INVOLVED.
1	A	----	R	x	X	Approval of Inspection and Test Plan (ITP) of vendor
						Before Start of Fabrication
	A	----	R	x	X	WPS and PQR Approval
2	R	----	R	x	X	Welder Qualification (WPQR)
						During Fabrication
3	R/W	----	R/W	x	X	Material Identification, Verification and Marking (low stress punch mark transfer) and traceability, Review of certificates (NACE as applicable)
4	RW	----	RW	x	X	Shell bending / Forming
5	RW	----	RW	x	X	Weld joint fit-up inspection
6	W	----	W	x	X	Dimensional inspection, Nozzles orientation and level check
7	RW	----	RW	x	X	Weld visual inspection
8	R	----	R	x	X	Post Weld Heat Treatment records/charts (where required)
9	RW	----	RW	x	X	NDT of all weld joints (RT, UT, MT, PT), Hardness, PMI, etc. as per spec.(100% review of RT films by TPI & at random by CA)
10	R	----	W	x	X	Pneumatic test of RF Pads
11	W	----	W	x	X	Final Visual & Dimensional inspection of equipment
12	W	----	W	x	X	Hydro-Test and drying of Vessel
13	R	----	R	x	X	Review of certificates for filter element including material compliance, Strainer, dimensions & fixing arrangement
						Surface Preparation and Painting / Coating
15	RW	----	RW	x	X	Surface Preparation of vessel after shot blasting
16	RW	----	RW	x	X	Painting / Coating inspection as per ONGC spec.
17	W	----	W	x	X	Vessel Internals Inspection- Cleanliness and completeness, before box-up
18						**Other Requirements**
19	R	----	R	R	X	Review of Final Documentation to comply with spec. requirements.

						Calibration certificates for instruments, Certificate of Conformity for IP/ NEMA Enclosure Class for Transmitters, Switches, Junction Boxes etc., (As applicable). Instruments as per approved Instrument data sheets.
20	W	----	W	W	X	Final Packing inspection for completeness during / after packing- tagging, preservation, packing including spares
21	Is	----	R	x	X	Verification of docs & Inspection Release Note
22	W	W	-		X	Verification of items as per IRN
23	W	W			X	IMIR/GIIR on the basis of IRN
***Refer Applicable Electrical IRT for Electrical Equipments/Items**						
LEGENDS & NOTES : Explained Separately						

FORMAT No.	Ref. PROCEDURE No.	ISSUE No.	REV. No.	REV. DATE:	
ODS/SOF/004 A	ODS/SOP/023	01	00	08.03.2016	

ओएनजीसी ONGC	**Offshore Design Section Engineering Services (ISO – 9001:2008)**	**INSPECTION REQUIREMENT TABLE**	**IRT No**	ODS/MECH/IRT/48
			Rev No	0
			Discipline	Mechanical

Item : Air/Natural Gas Operated Double Diaphragm Pump	Inspection Category : "B"

Activity No.	**1. Inspection by ONGC / Certification Agency (CA)**					
		2. Inspection by ONGC / Third Party Inspection (TPI)				
			3. Inspection by Contractor / Contractor's Inspection Agency			
				4. Inspection by Vendor/ Sub Vendor		
					5. Certificates/compliance/Data/Information to be submitted by vendor for Review/ Approval	
						6. Stage of Inspection Involved
1	-	-	W	H	-	Pre-inspection Meeting/Expediting
2	A	-	R	H	X	QA Plan/ Inspection & Test Plan
3	R	-	R	H	X	Material Test Certificates, Corrosion Test Reports, Hazardous Area Classification and IP Certificates for E&I Items, Statutory Body Certificates (as applicable), Instrument calibration, Test Certificates of Bought out Items ((Pump Seal System, Pulsation Dampener, valves and other miscellaneous items), Test Records and Compliance to other PS Requirements
4	R	-	R	H	X	NDT Procedures, Heat Treatment Procedure, Surface Preparation and Protective Coating Procedure, WPS & PQR (As applicable)
5	A	-	R	H	X	FAT Procedure & Hydrostatic Test Procedure
	W		W	H	X	Hydrostatic Testing
6	W	-	W	H	X	Run Test, Performance Test on complete unit package (including Pressure Relief Valve Check),NPSH Test, Noise Test , Vibration Test as applicable
7	W	-	W	H	X	Final Visual, Dimensional Check of Individual Components, Control panel functional test & Logic tests for the equipment package during FAT. Instruments as per approved Instrument data sheets.
8	R	-	R	H	X	Test Result correlation report for Speed, Viscosity & Specific Gravity Conditions (as applicable)
9	RW	-	RW	H	X	Protective Coating (Final DFT and Visual Check)
10	W	-	W	H	X	Final skid inspection including visual, dimensional check, completeness after packing (including spares), name plate verification, tagging, preservation and preparation for shipping
11	Is	-	R	H	X	Final Documentation Review and Issue of Inspection Release Note
IMIR/GIIR at Yard/Offshore						
46	W	W	-		X	Verification of items as per IRN
47	W	W			X	IMIR/GIIR on the basis of IRN
***Refer Applicable Electrical IRT for Electrical Equipments/Items**						

LEGENDS & NOTES : Explained Separately

ओएनजीसी ONGC	**Offshore Design Section Engineering Services (ISO – 9001:2008)**	**INSPECTION REQUIREMENT TABLE**	**IRT No.** ODS/MECH/IRT/49
			Rev No. 0
			Discipline Mechanical

ITEM : LP Gas Compressor Package/Screw Gas compressor	INSPECTION CATEGORY.: 'A'

Activity	1. Inspection by ONGC / Certification Agency.(CA)	2. Inspection by ONGC / Third Party Inspection (TPI)	3.Inspection by EPC / EPC Inspection Agency (IA)	4. Inspection by Vendor/ Sub Vendor	5.Certificates/compliance/Data/Information to be submitted by vendor for Review/ Approval	6. Stage of Inspection Involved	
1	A	-	R	H			Inspection test Plan.
2	A	-	R	H	X		FAT Procedure of complete Unit
							SCREW TYPE COMPRESSOR :
3	Rw	-	Rw	H			Material identification for compressor components as listed in QAP.
4	W	-	W	H			Performance test of the compressor including load test for 4 hours as per approved procedure.
5	W	-	W	H			Mechanical/Functional Test of the compressor
6	RW	-	RW	H			Protective Coating & Visual inspection.
7	Is	-	R	H			Review of final documentation and issue of inspection release note.
							PRESSURE VESSELS (INTERSTAGE RECEIVERS, COOLERS, AIR PRE/AFTER FILTERS) All REQUIREMENTS OF ASME INSPECTOR (AS APPLICABLE) SHALL BE MET.
8	W	-	W	H			Final dimensional check and mechanical clearance and visual inspection.
9	W	-	W	H			Hydrostatic test and Pneumatic test
10	Rw	-	RW	H			Protective coating and visual inspection (As applicable)
							FABRICATION OF SPOOLS (CONNECTING PIPING)
11	R	-	R	H			Material test certificates and records
12	W	-	W	H			Final dimensional inspection and mechanical clearance and visual inspection.
13	W	-	W	H			Hydrostatic test & Pneumatic testing
14	Rw	-	RW	H			Protective coating and visual inspection (As applicable)
							ALL INSTRUMENTATION
15	R	-	R	H			Manufacturer's TC / Certificate of conformity review (As applicable)
16	R	-	R	H			Enclosure class certificate for instrument panel.
17	W	-	W	H			Functional and simulation tests for sequence logic alarm and shutdown functions. Instruments as per approved Instrument data sheets.
18	W		W	H			Functional and simulation test for local control panels
19	Rw	-	Rw	H			Functional / Routine / Type / Calibration test for Gauges, Indicators, Flow, Instrument Transmitters etc. (As applicable)
							STRUCTURAL SKID
20	W	-	W	H			Check final visual and dimensional inspection
							SKID ASSEMBLY IN TOTAL

21	W	-	W	H		Verify / check all components as per P&ID
22	W	-	W	H		Check all connecting piping as per P&ID
23	W	-	W	H		Check final, visual and dimensions of the complete assembly
24	RW	-	RW	H		Surface preparation and protective coating and visual inspection (As applicable)
25	R	-	R	H		Review of final documentation.
26	Is	-	R	H		Issue of Inspection Release Note.
IMIR/GIIR at Yard/Offshore						
23	W	W	-		X	Verification of items as per IRN
24	W	W			X	IMIR/GIIR on the basis of IRN
***Refer Applicable Electrical IRT for Electrical Equipments/Items**						
LEGENDS & NOTES : Explained Separately						

FORMAT No.	Ref. PROCEDURE No.	ISSUE No.	REV. No.	REV. DATE:
ODS/SOF/004A	ODS/SOP/023	01	00	08.03.2016

ओएनजीसी ONGC	**Offshore Design Section Engineering Services (ISO – 9001:2008)**	**INSPECTION REQUIREMENT TABLE**	**IRT No.** ODS/MECH/IRT/50
			Rev No. 0
			Discipline Mechanical

Item : Hot Oil Pump	Inspection Category : "A"

Activity No.	1. Inspection by ONGC / Certification Agency (CA)	2. Inspection by ONGC / Third Party Inspection (TPI)	3. Inspection by Contractor / Contractor's Inspection Agency (IA)	4. Inspection by Vendor/ Sub Vendor	5.Certificates/compliance/Data/Information to be submitted by vendor for Review/ Approval	6. Stage of Inspection Involved
						General
1	-	-	W	H	-	Pre-inspection Meeting/Expediting
2	A	-	R	H	X	QA Plan/ Inspection & Test Plan
3	R	-	R	H	X	Material Test Certificates, Corrosion Test Reports, Hazardous Area Classification and IP Certificates for E&I Items, Instrument calibration, Test Certificates of Bought out Items, Test Records and Compliance to other PS Requirements
4	R	-	R	H	X	NDT Procedures, Heat Treatment Procedure, Surface Preparation and Protective Coating Procedure, WPS & PQR (As applicable)
5	R	-	R	H	X	Statutory Body Certificates for Hazardous Area Classification and Environmental Protection for Instrumentation Items (As applicable)
6	A	-	R	H	X	Tests/FAT Procedure including Hydrostatic Test Procedure
7	W		W	H	X	Stage inspection e.g Fit up, weld, hydrotest (as applicable)
						Pump
8	R	-	R	H	X	Material Identification, MTC Review & Records of Pump Casing, Impeller, Shaft
9	R	-	R	H	X	Dynamic Balancing report of rotor assembly
10	R/W	-	W	H	X	Hydrostatic Test of Casing, Discharge Header
11	R	-	R	H	X	NDT as applicable
12	W	-	W	H	X	Mechanical Seal and its component checking (in case of centrifugal pump)
13	W	-	W	H	X	Mechanical Run Test
14	W		W	H	X	Check/Verify the completeness components Case wear ring, Impeller wear ring etc.
15	W	-	W	H	X	Performance Test (at Shut off, at Minimum Flow Rate, at Rated Flow and at 125% Capacity) on complete unit package, Endurance test for 4 hours, NPSH Test (one identical pump), Noise Test , Vibration Test

16	W	-	W	H	X	Final Visual, Dimensional Check of Individual Components
17	R	-	R	H	X	Test Result correlation report for Speed, Viscosity & Specific Gravity Conditions (as applicable)
18	W	-	W	H	X	Strip Down test for checking any abnormal rubbing or wear
						Instrumentation and Control
19	W	-	W	H	X	Final Visual, Dimensional Check
20	R	-	R	H	X	Material Test Certificate, Records, Type Test Reports, Control panel functional test & Logic tests for the equipment package during FAT. Instruments as per approved Instrument data sheets.
21	W	-	W	H	X	Check Individual Components, Calibration Check, Functional Check and Operational Check
						Complete Skid Assembly
22	R	-	R	H	X	Check/verify of items/equipment, review all applicable documents i.e. material test certificates, conformance/compliance certificates, test reports etc. for major brought out components/items
23	R	-	R	H	X	NDE (RT, UT, MPI, DPI) as applicable
24	R	-	R	H	X	Heat treatment as applicable
25	RW	-	Rw	H	X	Protective Coating (Final DFT and Visual Check)
26	RW	-	RW	H	X	Final inspection including visual, dimensional check, completeness after packing (including spares), name plate verification, tagging, preservation and preparation for shipping
27	Is	-	R	H	X	Final Documentation Review and Issue of Inspection Release Note
IMIR/GIIR at Yard/Offshore						
23	W	W	-		X	Verification of items as per IRN
24	W	W			X	IMIR/GIIR on the basis of IRN
***Refer Applicable Electrical IRT for Electrical Equipments/Items.**						
LEGENDS & NOTES : Explained Separately						

FORMAT No.	Ref. PROCEDURE No.	ISSUE No.	REV. No.	REV. DATE:
ODS/SOF/004A	ODS/SOP/023	01	00	08.03.2016

ओएनजीसी ONGC	**Offshore Design Section Engineering Services (ISO – 9001:2008)**					**INSPECTION REQUIREMENT TABLE**	**IRT No.**	ODS/MECH/IRT/51
							Rev No	0
							Discipline	Mechanical
ITEM : Reciprocating Gas Compressor Package/Fuel Gas compressor							INSPECTION CATEGORY.: 'A'	
Activity	**1. Inspection by ONGC / Certification Agency.(CA)**							
		2. Inspection by ONGC / Third Party Inspection (TPI)						
			3.Inspection by EPC / EPC Inspection Agency (IA)					
				4. Inspection by Vendor/ Sub Vendor				
					5. Certificates/compliance/Data/Information to be submitted by vendor for Review/ Approval			
						6. Stage of Inspection Involved		
1	A	-	R	H	x	Inspection test Plan.		
2	A	-	R	H	X	FAT Procedure of complete Unit		
						RECIPROCATING TYPE COMPRESSOR :		
3	RW	-	RW	H	x	Material identification for compressor components as listed in QAP.		
4	W	-	W	H	x	Performance test of the compressor including load test for 4 hours as per approved procedure.		
5	W	-	W	H	x	Mechanical/Functional Test of the compressor		
6	Rw	-	Rw	H	x	Protective Coating & Visual inspection.		
7	R	-	H	H	x	Review of final documentation and issue of inspection release note.		
						PRESSURE VESSELS (INTERSTAGE RECEIVERS, COOLERS, AIR PRE/AFTER FILTERS) All REQUIREMENTS OF ASME INSPECTOR (AS APPLICABLE) SHALL BE MET.		
8	W	-	W	H	x	Final dimensional check and mechanical clearance and visual inspection.		
9	W	-	W	H	x	Hydrostatic test and Pneumatic test		
10	Rw	-	W	H	x	Protective coating and visual inspection (As applicable)		
						FABRICATION OF SPOOLS (CONNECTING PIPING)		
11	R	-	R	H	x	Material test certificates and records		
12	RW	-	RW	H	x	Final dimensional inspection and mechanical clearance and visual inspection.		
13	W	-	W	H	x	Hydrostatic test & Pneumatic testing		
14	Rw	-	W	H	x	Protective coating and visual inspection (As applicable)		
						INSTRUMENTATION		
15	R	-	R	H	x	Manufacturer's TC / Certificate of conformity review (As applicable). Control panel functional test & Logic tests for the equipment package during FAT		
16	R	-	R	H	x	Enclosure class certificate for instrument panel. Calibration certificates for instruments, Certificate of Conformity for IP/ NEMA Enclosure Class for Transmitters, Switches, Junction Boxes etc., (As applicable). Instruments as per approved Instrument data sheets.		
17	W	-	W	H	xx	Functional and simulation tests for sequence logic alarm and shutdown functions.		
18	W		W	H		Functional and simulation test for local control panels		

19	Rw	-	RW	H	x	Functional / Routine / Type / Calibration test for Gauges, Indicators, Flow, Instrument Transmitters etc. (As applicable)
						STRUCTURAL SKID
20	W	-	W	H	x	Check final visual and dimensional inspection
						G. SKID ASSEMBLY IN TOTAL
21	W	-	W	H	x	Verify / check all components as per P&ID
22	W	-	W	H	x	Check all connecting piping as per P&ID
23	W	-	W	H	x	Check final, visual and dimensions of the complete assembly
24	Rw	-	W	H	x	Surface preparation and protective coating and visual inspection (As applicable)
25	R	-	R	H	x	Review of final documentation.
25	Is	-	R	H	x	Issue of Inspection Release Note.
IMIR/GIIR at Yard/Offshore						
23	W	W	-		X	Verification of items as per IRN
24	W	W			X	IMIR/GIIR on the basis of IRN
***Refer Applicable Electrical IRT for Electrical Equipments/Items**						
LEGENDS & NOTES : Explained Separately						

FORMAT No.	Ref. PROCEDURE No.	ISSUE No.	REV. No.	REV. DATE:
ODS/SOF/004A	ODS/SOP/023	01	00	08.03.2016

ओएनजीसी ONGC	**Offshore Design Section Engineering Services (ISO – 9001:2008)**	**INSPECTION REQUIREMENT TABLE**	**IRT No.** ODS/MECH/IRT/52
			Rev No. 0
			Discipline Mechanical

Item: Centrifugal Pumps for miscellaneous use (eg. Pot Water, Cooling Water etc.)	Inspection Category : "B"

Activity No.	1. Inspection by ONGC / Certification Agency (CA)	2. Inspection by ONGC / Third Party Inspection (TPI)	3. Inspection by Contractor / Contractor's Inspection Agency (IA)	4. Inspection by Vendor/ Sub Vendor	5.Certificates/compliance/Data/Information to be submitted by vendor for Review/ Approval	Stage of Inspection Involved
1	-	-	W	H	-	Pre-inspection Meeting/Expediting
2	A	-	R	H	X	QA Plan/ Inspection & Test Plan
3	R	-	R	H	X	Material Test Certificates, Corrosion Test Reports, Hazardous Area Classification and IP Certificates for E&I Items, Instrument calibration, Test Certificates of Bought out Items, Test Records and Compliance to other PS Requirements
4	R	-	R	H	X	NDT Procedures, Heat Treatment Procedure, Surface Preparation and Protective Coating Procedure, WPS & PQR (As applicable)
5	A	-	R	H	X	FAT Procedure & Hydrostatic Test Procedure
6	R	-	R	H	X	Material Identification, MTC Review & Records of Pump Casing, Impeller, Shaft
7	R	-	R	H	X	Dynamic Balancing report of rotor assembly
8	R	-	Rw	H	X	Hydrostatic Test of Casing Discharge Header & Column Pipes
9	R	-	R	H	X	NDT as applicable
10	W	-	W	H	X	Mechanical Seal and its component checking
11	W	-	W	H	X	Mechanical Run Test
12	W	-	W	H	X	Performance Test on complete unit package, NPSH Test (one identical Pump), Noise Test , Vibration Test
13	W	-	W	H	X	Final Visual, Dimensional Check of Individual Components
14	R	-	R	H	X	Test Result correlation report for Speed, Viscosity & Specific Gravity Conditions (as applicable)
18	R	-	R	H	X	Check/verify of items/equipment of complete skid, review all applicable documents i.e. material test certificates, conformance/compliance certificates, test reports etc. for major brought out components/items
19	R	-	R	H	X	NDE (RT, UT, MPI, DPI) and PWHT as applicable
20	RW	-	Rw	H	X	Protective Coating (Final DFT and Visual Check)

21	W	-	W	H	X	Final inspection including visual, dimensional check, completeness after packing (including spares), name plate verification, tagging, preservation and preparation for shipping
22	Is	-	R	H	X	Final Documentation Review and Issue of Inspection Release Note
IMIR/GIIR at Yard/Offshore						
23	W	W	-		X	Verification of items as per IRN
24	W	W			X	IMIR/GIIR on the basis of IRN
***Refer Applicable Electrical IRT for Electrical Equipments/Items**						
LEGENDS & NOTES : Explained Separately						

FORMAT No.	Ref. PROCEDURE No.	ISSUE No.	REV. No.	REV. DATE:
ODS/SOF/004A	ODS/SOP/023	01	00	08.03.2016

ओएनजीसी ONGC	Offshore Design Section Engineering Services (ISO – 9001:2008)					INSPECTION REQUIREMENT TABLE	IRT No.	ODS/MECH/IRT/ Safety 01
							Rev No.	0
							Discipline	Mechanical
Item : DCP Skid							Inspection Category : "B"	
Activity No.	1. Inspection by ONGC / Certification Agency (CA)							
		2. Inspection by ONGC / Third Party Inspection Agency (TPI)						
			3. Inspection by EPC / EPC's Inspection Agency (IA)					
				4. Inspection by Vendor / Sub Vendor				
						6. Stage of Inspection Involved		
						General		
1	A	-	R	H	X	Inspection and Test Plan		
2	A	-	R	H	X	FAT Procedure of complete Unit		
3	R	-	R	H	X	Material Identification Report of Pressure Vessel, Review of Material Test Certificates/ Compliance Certificate for all Major Components		
4	A	-	R	H	X	WPS, PQR, NDE and Surface Preparation & Protective Coating Procedures		
						Testing & Inspection		
						Dry Chemical Container		
5	R	-	R	H	X	NDE Requirements (As applicable)		
6	W	-	W	H	X	Visual, Dimensional Check and Mechanical Clearance		
7	W	-	W	H	X	Hydrostatic Test of Containers/ Vessels		
8	RW	-	Rw	H	X	Protective Coating (Final DFT and Visual Check)		
9	W	-	W	H	X	ASME Code Stamping (As applicable)		
						Control Valves, Pressure Gauges, Pressure Relief Valves, Rupture Disc		
10	R/W	-	R/W	H	X	Verify Certificates, ASME Code Stamping for LDC Tank Pressure Vessel Relief Valve (As applicable) Certificate of Conformity for IP/ NEMA Enclosure Class for all instruments and valves. Calibration certificates for instruments. Control valve functional check.		
						Hose Reels		
11	W	-	W	H	X	Verify UL Listings		
						Skid Structure Fabrication and Assembly		
12	W	-	W	H	X	Visual and Dimensional Check of Skid Structure Assembly		
13	RW	-	RW	H	X	Piping Spools Fabrication, Testing & Installation		
						Final Inspection		
14	W	-	W	H	X	Interconnecting Piping and Components as per P&ID		

15	W	-	W	H	X	Visual and Dimensional Check of Whole Skid Assembly
16	RW	-	Rw	H	X	Protective Coating (Final DFT and Visual Check)
17	W	-	W	H	X	Performance Test (One per Type) / FAT
18	Is	-	R	H	X	Final Documentation Review and Issue of Inspection Release Note (Final Documentation shall include Manufacturer TC's for all Bought out Items, Raw Materials and Stage Inspection Reports as per approved ITP/QAP)
IMIR/GIIR at Yard/Offshore						
23	W	W	-		X	Verification of items as per IRN
24	W	W			X	IMIR/GIIR on the basis of IRN
LEGENDS & NOTES : Explained Separately						

FORMAT No.	Ref. PROCEDURE No.	ISSUE No.	REV. No.	REV. DATE:
ODS/SOF/004A	ODS/SOP/023	01	00	08.01.2016

ONGC	Offshore Design Section Engineering Services (ISO – 9001:2008)	INSPECTION REQUIREMENT TABLE	IRT No.	ODS/MECH/IRT/ Safety 02
			Rev No	0
			Discipline	Mechanical

ITEM : Fire Fighting Equipment	INSPECTION CATEGORY : "C"

Activity	1. Inspection by ONGC/ Certification Agency (CA)	2.Inspection by ONGC/Third Party Inspection (TPI)	3. Inspection by EPC / EPC's Inspection Agency (IA)	4. Inspection by Vendor/ Sub Vendor	5. Certificates/compliance/Data/Information to be submitted by vendor for Review/ Approval	6. Stages of Inspection Involved	
							General:
1	A	-	R	H	X		Inspection & Test plan
2	A	-	R	H	X		FAT Procedure of complete Unit
Portable CO2 Fire Extinguisher/Portable DCP Fire Extinguisher/							
3	R	-	R	H	X		Manufacturer's test certificates/Compliance certificate (Dry chemical, hose reels, cylinder, instruments and other miscellaneous item) as per project specification.
4	…	-	R	H	X		Hydro testing report of container.
5	…	-	W	H	X		Performance test ,marking and painting as per project specification
6	…	-	R	H	X		Statutory Authority certificate /Compliance report
7	-	-	W	H	X		Final DFT check (as applicable)
8	-	-	R	H	X		Name plate verification.
9	…..	-	W	H	X		Final visual and dimensional inspection as per the approved drawings.
Fire Extinguisher Box							
10	R	-	R	H	X		Manufacturer's test certificates/Compliance certificate as per project specification.
11	-	-	R	H	X		Final visual and dimensional inspection as per the approved drawings.
Fire Blanket							
12	R	-	R	H	X		Manufacturer's test certificates/Compliance certificate as per project specification.
13	-	-	R	H	X		Quantitative check.
Final Inspection							

14	-	-	R	H	X	Manufacturer's test certificates/Compliance certificate as per project specification.
15	-	-	W	H	X	Verification of tag number.
16	….	-	Is	H	X	Issue of Inspection Release Note.
						IMIR/GIIR at Yard/Offshore
17	W	W	-		X	Verification of items as per IRN
18	W	W			X	IMIR/GIIR on the basis of IRN

LEGENDS & NOTES : Explained Separately

FORMAT No.	Ref. PROCEDURE No.	ISSUE No.	REV. No.	REV. DATE:
ODS/SOF/004A	ODS/SOP/023	01	00	08.03.2016

ओएनजीसी ONGC	Offshore Design Section Engineering Services (ISO – 9001:2008)					INSPECTION REQUIREMENT TABLE	IRT No	ODS/MECH/IRT/ Safety 03
							Rev No	0
							Discipline	Mechanical

ITEM : Life Saving Equipment						INSPECTION CATEGORY : "B"
Activity	1. Inspection by ONGC / Certification Agency (CA).					
		2. Inspection by ONGC / Third Party Inspection Agency (TPI).				
			3. Inspection by EPC / EPC's Inspection Agency (IA)			
				4. Inspection by Vendor / Sub Vendor.		
					5. Certificates/compliance/Data/Information to be submitted by vendor for Review/ Approve.	
						6. Stages of Inspection Involved
						General:
1	A	-	A	H	X	Inspection & Test plan
2	A	-	R	H	X	FAT Procedure of complete Unit
Fire Extinguisher Box						
3	R	-	R	H	X	Manufacturer's test certificates/Compliance certificate as per project specification.
4	W	-	W	H	X	Final visual and dimensional inspection as per the approved drawings.
Helicopter Rescue Kit						
5	R	-	R	H	X	Manufacturer's test certificates/Compliance certificate as per project specification.
6	W	-	W	H	X	Quantitative check.
7	R	-	R	H	X	Statutory Authority certificate /Compliance report
8	W	-	W	H	X	Final visual and dimensional inspection as per the approved drawings.
Life Rafts						
9	R	-	R	H	X	Manufacturer's test certificates/Compliance certificate as per project specification.
10	R	-	R	H	X	Capacity certificate from manufacturer
11	R	-	R	H	X	Statutory Authority certificate /Compliance report
12	W	-	W	H	X	Final visual and dimensional inspection as per the approved drawings.
Eye wash and safety shower						
13	R	-	R	H	X	Manufacturer's test certificates/Compliance certificate as per project specification.
14	W	-	W	H	X	Hydrotest test as per project specification/Data Sheets.
15	W	-	W	H	X	Quantitative check.
16	R	-	R	H	X	Statutory Authority certificate /Compliance report
17	W	-	W	H	X	Final visual and dimensional inspection as per the approved drawings

Life Jacket & work vest /Eye Wash Unit/Rope Ladder//Stretcher						
18	R	-	R	H	X	Manufacturer's test certificates/Compliance certificate as per project specification.
19	R	-	R	H	X	Statutory Authority certificate /Compliance report
20	W	-	W	H	X	Final visual and dimensional inspection as per the approved drawings.
First Aid Kit						
21	R	-	R	H	X	Manufacturer's test certificates/Compliance certificate as per project specification.
22	W	-	W	H	X	Quantitative check.
23	R	-	R	H	X	Statutory Authority certificate /Compliance report
Portable Breathing Apparatus						
24	R	-	R	H	X	Manufacturer's test certificates/Compliance certificate as per project specification.
25	R	-	R	H	X	Quantitative check.
26	R	-	R	H	X	Statutory Authority certificate /Compliance report
27	W	-	W	H	X	Final visual and dimensional inspection as per the approved drawings.
Life Ring Buoys						
28	R	-	R	H	X	Manufacturer's test certificates/Compliance certificate as per project specification.
29	R	-	R	H	X	Statutory Authority certificate /Compliance report
30	R	-	R	H	X	Type test certificate for light
Fire Blanket						
31	R	-	R	H	X	Manufacturer's test certificates/Compliance certificate as per project specification.
32	W	-	W	H	X	Quantitative check.
Final Inspection						
33	R	-	R	H	X	Manufacturer's test certificates/Compliance certificate as per project specification.
34	W	-	W	H	X	Verification of tag number.
35	Is	-	R	H	X	Docs verification & Issue of Inspection Release Note.
IMIR/GIIR at Yard/Offshore						
23	W	W	-		X	Verification of items as per IRN
24	W	W			X	IMIR/GIIR on the basis of IRN

LEGENDS & NOTES : Explained Separately

FORMAT No.	Ref. PROCEDURE No.	ISSUE No.	REV. No.	REV. DATE:
ODS/SOF/004A	ODS/SOP/023	01	00	08.03.2016

ओएनजीसी ONGC	**Offshore Design Section Engineering Services (ISO – 9001:2008)**	**INSPECTION REQUIREMENT TABLE**	**IRT No.** ODS/MECH/IRT/ Safety 04
			Rev No. 0
			Discipline Mechanical

ITEM : Breathing Air Compressor Package						Inspection Category : "B"
Activity No.	**1. Inspection by ONGC / Certification Agency (CA)**					
		2. Inspection by ONGC / Third Party Inspection Agency (TPI)				
			3. Inspection by EPC/ EPC's Inspection Agency (IA)			
				4. Inspection by Vendor / Sub Vendor		
					5. Certificates/compliance/Data/Information to be submitted by vendor for Review/ Approval	
						6.Stage of Inspection Involved
1	A	-	R	H	X	Inspection & Test Plan
2	R	-	R	H	X	WPS/ PQR and Procedures for NDT, Heat Treatment, Surface Preparation & Protective Coating including NDT Operators Qualification Records
3	A	-	R	H	X	FAT & SAT Procedures
4	R	-	R	H	X	Statutory Body Certificates for Hazardous Area Classification and Environmental Protection for Instrumentation Items
5	R	-	R	H	X	Material Test Certificates / Confirmations for Chemical, Physical, Corrosion Properties etc. as per applicable ONGC Specification
6	R	-	R	H	X	Material Identification and Correlation of all Pressure Parts Including Internals
						Breathing Air Compressor (Positive Displacement)
7	R	-	R	H	X	Manufacturer's Test Certificates for Major Compressor Components
8	W	-	W	H	X	NDT of Compressor Components like Piston Rods/ Cylinders, Pistons, Liners etc.
9	W	-	W	H	X	Hydrostatic Test for Cylinders
10	W	-	W	H	X	Balancing of Flywheel
11	W	-	W	H	X	Surface Finish Check-Piston Rods, Cylinders, Liners, Including Hardness Check (As applicable)
12	W	-	W	H	X	Mechanical Run Test of Compressor, Drivers and Gear Units including Integral Auxiliary System Package
13	W	-	W	H	X	Performance Test of Compressor
14	W	-	W	H	X	Strip Down Test after Mechanical Run Test (As applicable)
15	RW	-	RW	H	X	Protective Coating Inspection (Final DFT & Visual Check)
						Pressure Vessels / Coolers (Inter / After Coolers, Separators, Air Receiver)
16	R	-	R	H	X	WPS/ PQR & Repair Procedure (As applicable)

17	R	-	R	H	X	Material Identification for Pressure Parts Viz. Plates, Pipes, Flanges, Fittings, Dish Ends, Filter Elements, Heater, Fasteners etc. & Review of Test Certificates
18	RW	-	RW	H	X	Stage Inspection Viz. Shell/ Dish Set up, Root/ Back Chip D.P. Nozzle Set up, Dimensional Check/ DP Check of Dish Ends, Tube Sheet Inspection, Piping Assembly (As applicable)
19	R/W	-	R/W	H	X	Weld Visual, NDT and Heat Treatment Records & Charts (As applicable)
20	W	-	W	H	X	Hydrostatic Test for Pressure Containing Parts
21	W	-	W	H	X	Pneumatic Test for RF Pads (As applicable)
22	W	-	W	H	X	ASME Code Stamping (As applicable)
23	W	-	W	H	X	Final Visual and Dimensional Check
24	RW	-	RW	H	X	Surface preparation & Protective Coating
						Connecting Piping and Valves for Skid and Manifold for Filling Station
25	R	-	R	H	X	Material Identification, Review of Test Certificates & Records
26	R	-	R	H	X	NDE Requirements (As applicable)
27	W	-	W	H	X	Hydrostatic Testing
28	W	-	W	H	X	Final Visual and Dimensional Check
29	RW	-	RW	H	X	Surface preparation &Protective Coating Check
						Instrumentation Items
30	R	-	R	H	X	Certificate of Conformity for Specified IP/ NEMA Enclosure Class of Panel
31	R/W	-	R/W	H	X	Routine/ Type Test/ Acceptance Test/ Special Test Certificate for Motors, Shutdown & Safety Valves, Cables/ Continuity (As applicable) and Functional Test of Panels
32	R/W	-	R/W	H	X	Calibration/ Functional/ Manufacturers Test Certificate for Gauges, Transmitters, Switches etc. (As applicable). Instruments as per approved Instrument data sheets. Control panel functional test & Logic tests for the equipment package during FAT
33	R	-	R	H	X	Certificate of Conformity for IP/ NEMA Enclosure Class for Transmitters, Junction Boxes etc. (As applicable)
34	R	-	R	H	X	Statutory Body Certificates for Hazardous Class for Transmitters, Switches, Junction Boxes etc. (As applicable)
						Structural Skid
35	R	-	R	H	X	Review of MTCs for All Structural Items
36	R	-	R	H	X	WPS & PQR
37	R	-	R	H	X	Non Destructive Testing (As applicable)
38	W		W	H	X	Final Visual and Dimensional Check
						Complete Skid Assembly
39	W	-	W	H	X	Verify / Check all Components including Piping as per P&ID

40	W	-	W	H	X	Final Visual and Dimensional Check of Complete Assembly
42	W	-	W	H	X	FAT-System Functional Test Including Functional Test of Instrumentation & Control and Hard Stamping on Skid for Identification
43	RW	-	Rw	H	X	Surface preparation & Protective Coating Check (Final Paint DFT & Visual Check)
44	Is	-	R	H	X	Final Documentation Review and Issue of Inspection Release Note
IMIR/GIIR at Yard/Offshore						
23	W	W	-		X	Verification of items as per IRN
24	W	W			X	IMIR/GIIR on the basis of IRN
25	W	W		H	X	SAT/Performance Test of Package in field (offshore platform) by the vendor.
***Refer Applicable Electrical IRT for Electrical Equipments/Items**						
LEGENDS & NOTES : Explained Separately						

FORMAT No.	Ref. PROCEDURE No.	ISSUE No.	REV. No.	REV. DATE:
ODS/SOF/004A	ODS/SOP/023	01	00	08.03.2016

ओएनजीसी ONGC	Offshore Design Section Engineering Services (ISO – 9001:2008)		INSPECTION REQUIREMENT TABLE		IRT No.	ODS/MECH/IRT/ Safety 08	
					Rev No.	0	
					Discipline	Mechanical	
Item: Survival Craft					Inspection Category : B		
ACTIVITY							
	1. Inspection by ONGC / Certification Agency CA.						
		2. Inspection by ONGC / Third Party Inspection Agency (TPI)					
			3.Inspection by EPC / EPC's Inspection Agency (IA				
				4. Inspection by Vendor / Sub vendor			
					5. Certificates/compliance/Data/Information to be submitted by vendor for Review/ Approval.		
No						6. STAGES OF INSPECTION INVOLVED.	
1	A	.....	R	H	X	Approval of QA Plan / Inspection and test plan (ITP) of vendor	
2	A	-	R	H	X	FAT Procedure of complete Unit	
						Davits	
3	R/W	....	W	W	X	Check final visual and dimensional	
4	R	....	R	R	X	WPS, PQR as per ONGC Spec. (wherever required)	
5	R/W	....	W	W	X	Static load test and over load test at 1.33 times safe working load, followed by NDT of critical components for damage check	
6	R/W	....	W	W	X	Descend and hoisting speed check under full load	
7	R/W	....	W	W	X	Rope wire - material and safe load test certificate	
8	R/W	....	W	W	X	Rope wire lubrication, inspection for kinking, cut, broken or crushing of strand, etc.	
9	R/W	....	W	W	X	Hoisting limit switches setting and function test	
10	R/W	....	W	W	X	Centrifugal break check- to stop over speeding during lowering	
11	R/W	....	W	W	X	Gear box inspection for cleanliness and any damage	
12	R/W	....	W	W	X	Manual cranking for boat hoisting - electrical failure	
13	R/W	....	W	W	X	Length of wire rope (Two turns on drum when lowered to maximum height)	
						Survival Craft	
14	W	....	W	W	X	Functional tests	
15	W	....	W	W	X	Deluge / Water spray- wet film check and area covered by spray	
16	W	....	W	W	X	Compressed air discharge system check	
18	W	....	W	W	X	Sealing at windows during full working of sprinklers	

19	W	….	W	W	X	Tiller operation and bilge pump working
20	W	….	W	W	X	Engine starting system check - Hydraulic and manual
21	W	….	W	W	X	Battery charging and backup system
22	W	….	W	W	X	Helmsman window wipers operation
23	W	….	W	W	X	Starter panel functional test - Indications, instrumentation etc.
						Type Approvals
24	R	….	R	W	X	Survival craft - SOLAS/MMD (Indigenous) or USCG/MCA/EC (Imported) (over turning, Fire resistance, water splash under full load etc.)
25	R	….	R	R	X	Davits certification by DOT-UK (Conformance to BS 486) (if applicable)
26	R	….	R	W	X	Starters panel IP rating
27	R	….	R	W	X	Hazardous Area certification and IP rating of local push button station near boat launch station
28	R	….	R	R	X	EPIRB certification (if applicable)
29	W	….	W	H	X	Check survival craft equipment as per SOLAS
						Performance Test (as per procedure)
30	RW	….	RW	W	X	Noise level- Davit winches
31	RW	….	RW	W	X	Vibration measurement - Davit winches
32	RW	….	RW	W	X	Boat speed check under full load
33	W	….	W	W	X	Manoeuvrability - Figure 8 formation
34	W	….	W	W	X	Manual and auto hook release under full load
35	W	….	W	W	X	Functional test to confirm no fume development
						General checks
36	RW	….	RW	W	X	Seating capacity
37	RW	….	RW	W	X	Oil or diesel leaks
38	RW	….	RW	W	X	Any coating on the surface that may give hazardous fumes on heating (Like engine, manifolds, exhaust, etc.)
39	RW	….	RW	W	X	Type and Rating of diesel engine
						Surface Preparation and Coating
40	RW	….	R/W	W	X	Painting/Coating inspection as per ONGC spec.
						Other Requirements
41	W	….	W	H	X	Check for supply of accessories & spares
42	W	….	W	W	X	Final Package Inspection for completeness during / After packaging-tagging, preservation, packing including spares
43	W	….	R	R	X	Review of final documentation to spec. requirement
44	Is	….	R	H	X	Ins Release Note
IMIR/GIIR at Yard/Offshore						
23	W	W	-		X	Verification of items as per IRN
24	W	W			X	IMIR/GIIR on the basis of IRN
***Refer Applicable Electrical IRT for Electrical Equipments/Items**						

LEGENDS & NOTES : Explained Separately				
FORMAT No.	Ref. PROCEDURE No.	ISSUE No.	REV. No.	REV. DATE:
ODS/SOF/004A	ODS/SOP/023	01	00	08.03.2016

ओएनजीसी ONGC	**Offshore Design Section Engineering Services (ISO – 9001:2008)**	**INSPECTION REQUIREMENT TABLE**	**IRT No.**	ODS/MECH/IRT/ Safety 09
			Rev No.	0
			Discipline	Mechanical

ITEM : Clean Agent System	INSPECTION CATEGORY : "B"

Activity						
	1. Inspection by ONGC / Certification Agency (CA).					
		2. Inspection by ONGC / Third Party Inspection Agency (TPI).				
			3. Inspection by EPC / EPC's Inspection Agency (IA)			
				4. Inspection by Vendor / Sub Vendor.		
					5. Certificates/compliance/Data/Information to be submitted by vendor for Review/ Approval	
						6. Stages of Inspection Involved
General						
1	A	-	A	H	X	Quality Control Plan.
2	A	-	R	H	X	FAT Procedure of complete Unit
3	R	-	R	H	X	Review of material test certificates/compliance certificate for all major Bought Items like Valves, Pressure Gauges, Fire/Heat Detection/Sensing Device, Weighing Scale, Pressure Switches, and Actuators.
4	R	-	R	H	X	Statutory body certificates for Hazardous area classification and Environmental protection for Instrumentation items (as applicable).
5	R	-	R	H	X	Review of NDT Procedures, Painting and WPS, PQR and WPQT.
Testing & Inspection						
Cylinders						
6	RW	-	RW	H	X	Hydro & Pneumatic test of cylinders (as applicable)
7	W	-	W	H	X	Check final visual & dimensions of cylinders
8	RW	-	RW	H	X	Surface preparation and protective coating as per ONGC spec 2005
9	R	-	R	H	X	Verify certification of cylinders.
Control Panel						
10	Rw	-	W	H	X	Visual/dimensional check, functional check. Control panel functional test & Logic tests for the equipment package during FAT
11	R	-	R	H	X	Verify test certificates, certificates for specified enclosure class. Certificate of Conformity for IP/ NEMA Enclosure Class for Transmitters, Switches, Junction Boxes etc., (As applicable). Calibration certificates for instruments. Instruments as per approved Instrument data sheets.
Skid structure fabrication and assembly						
12	W	-	W	H	X	Check visual and dimensional of skid structure assembly.

13	RW	-	Rw	H	X	Surface preparation and protective coating as per ONGC spec 2005
Cylinder cabinet						
14	W	-	W	H	X	Check visual & dimensional
Final Inspection						
15	W	-	W	H	X	Check interconnecting piping and component as per ONGC spec 2004A.
16	W	-	W	H	X	Check Visual and dimensional of whole skid assembly
17	W	-	W	H	X	Surface preparation and protective coating (Final DFT)as per ONGC spec 2005
18	W	-	W	H	X	Performance Test
Final Documentation						
19	R	-	R	H	X	Final Documentation shall include manufacturer TC's for all bought out items, raw material and stage inspection report as per the approved ITP.
20	Is		R	H	X	Issue of Inspection release Note
IMIR/GIIR at Yard/Offshore						
23	W	W	-		X	Verification of items as per IRN
24	W	W			X	IMIR/GIIR on the basis of IRN
***Refer Applicable Electrical IRT for Electrical Equipments/Items**						
LEGENDS & NOTES : Explained Separately						

FORMAT No.	Ref. PROCEDURE No.	ISSUE No.	REV. No.	REV. DATE:
ODS/SOF/004A	ODS/SOP/023	01	00	08.03.2016

ओएनजीसी ONGC	**Offshore Design Section Engineering Services (ISO – 9001:2008)**					**INSPECTION REQUIREMENT TABLE**	**IRT No.** ODS/MECH/IRT/ Safety 10 **Rev No.** 0 **Discipline** Mechanical
Item : H2S Capsule/ Safe Shelter						Inspection Category : "B"	
Activity No.	**1. Inspection by ONGC / Certification Agency (CA)**						
		2. Inspection by ONGC / Third Party Inspection (TPI)					
			3. Inspection by Contractor / Contractor's Inspection Agency (IA)				
				4. Inspection by Vendor/ Sub Vendor			
					5. Certificates/compliance/Data/Information to be submitted by vendor for Review/ Approval		
						6. Stage of Inspection Involved	
						General	
1	-	-	W	H	-	Pre-inspection Meeting/Expediting	
2	A	-	R	H	X	QA Plan/ Inspection & Test Plan	
3	R	-	R	H	X	Material Test Certificates, Corrosion Test Reports, Hazardous Area Classification and IP Certificates for E&I Items, Test Certificates of Bought out Items, Test Records and Compliance to other PS Requirements	
4	R	-	R	H	X	NDT Procedures, Heat Treatment Procedure, Surface Preparation and Protective Coating Procedure, WPS & PQR (As applicable)	
5	A	-	R	H	X	FAT Procedure, Hydrostatic & Pneumatic Test Procedure	
6	R	-	R	H	X	Type Test certificates/ performance certificates as applicable	
						Diesel Engine (if required for power in well platform)	
7	W	-	W	H	X	Visual, Dimensional & Alignment Check	
8	W	-	W	H	X	Hydrostatic Test for all Components - Cooling Water, Jacket, Cylinder Block, Radiator, etc.	
9	W	-	W	H	X	Performance Test	
10	W	-	W	H	X	Load Test	
11	W	-	W	H	X	Check for Emergency Shut Down	
12	W	-	W	H	X	Noise & Vibration Level Check	
						Instrumentation and Control Panel	
13	W	-	W	H	X	Final Visual, Dimensional Check	
14	R	-	R	H	X	Material Test Certificate, Records, Type Test Reports	
15	W	-	W	H	X	Check Individual Components, Calibration Check, Functional Check and Operational Check	
						Complete Assembly	

16	R	-	R	H	X	Check/verify of items/equipment, review all applicable documents i.e. material test certificates, conformance/compliance certificates, test reports etc. for major brought out components/items
17	R	-	R	H	X	Check certificate of approval by Mercantile Marine Department, Gov. of India or equivalent statutory authority
18	W	-	W	H	X	Final Visual, Dimensional Check
19	R	-	R	H	X	NDE (RT, UT, MPI, DPI) as applicable
20	W	-	W	H	X	FAT
21	W	-	W	H	X	Noise & Vibration Tests
22	RW	-	Rw	H	X	Protective Coating (Final DFT and Visual Check)
23	RW	-	W	H	X	Preservation, Packing and preparation for shipping
24	Is	-	W	H	X	Final Documentation Review and Issue of Inspection Release Note (IRN)
IMIR/GIIR at Yard/Offshore						
23	W	W	-		X	Verification of items as per IRN
24	W	W			X	IMIR/GIIR on the basis of IRN
***Refer Applicable Electrical IRT for Electrical Equipments/Items**						
LEGENDS & NOTES : Explained Separately						

FORMAT No.	Ref. PROCEDURE No.	ISSUE No.	REV. No.	REV. DATE:
ODS/SOF/004A	ODS/SOP/023	01	00	08.03.2016

ONGC	Offshore Design Section Engineering Services ISO – 9001:2008	LIST OF IRTs (INSPECTION REQUIREMENT TABLE) & APPROVAL	Date	18/04/2015
			Discipline	PIPING
			Page: *1 OF 2*	

Sl. No.	Item Description	IRT No.	Inspection Category	Rev. No.	Rev. Date
1	Shut Down Valves	**ODS/PPG/IRT/01**	A	00	08.03.2016
2	Ball /Gate/Globe/Check/DBB Valves CS Nace & Non Nace (2" & Above)	**ODS/PPG/IRT/02**	B	00	08.03.2016
3	Ball /Gate/Globe/Check/DBB Valves DSS &SS (Nace & Non Nace)	**ODS/PPG/IRT/03**	B	00	08.03.2016
4	Choke Valves	**ODS/PPG/IRT/04**	B	00	08.03.2016
5	Bronze Valves	**ODS/PPG/IRT/05**	B	00	08.03.2016
6	Ball/Gate/Globe/Check/Needle Valve Cs Non-Nace (Below 2”)	**ODS/PPG/IRT/06**	C	00	08.03.2016
7	Scrapper Tee	**ODS/PPG/IRT/07**	B	00	08.03.2016
8	Hinge Closure	**ODS/PPG/IRT/08**	B	00	08.03.2016
9	Corrosion Coupon & Retrieval Kit	**ODS/PPG/IRT/09**	C	00	08.03.2016
10	Pig Indicator	**ODS/PPG/IRT/10**	C	00	08.03.2016
11	Fire Water Foam Hose Reel /Wash Down Hose Reel	**ODS/PPG/IRT/11**	C	00	08.03.2016
12	Strainers	**ODS/PPG/IRT/12**	C	00	08.03.2016
13	Spray Nozzles	**ODS/PPG/IRT/13**	C	00	08.03.2016
14	Continuous Drainer	**ODS/PPG/IRT/14**	C	00	08.03.2016
15	5 D Bends	**ODS/PPG/IRT/15**	B	00	08.03.2016
16	Hose And Hose Connection	**ODS/PPG/IRT/16**	C	00	08.03.2016
17	Sample Bomb	**ODS/PPG/IRT/17**	C	00	08.03.2016
18	Multi-Port Valves	**ODS/PPG/IRT/18**	A	00	08.03.2016

ONGC	Offshore Design Section Engineering Services ISO – 9001:2008	LIST OF IRTs (INSPECTION REQUIREMENT TABLE) & APPROVAL	Date	18/04/2015
			Discipline	PIPING
			Page: *2 OF 2*	

Sl. No.	Item Description	IRT No.	Inspection Category	Rev. No.	Rev. Date
19	Flame Arrester	**ODS/PPG/IRT/19**	C	00	08.03.2016
20	Inline-Separator	**ODS/PPG/IRT/20**	C	00	08.03.2016
21	CPVC Valves	**ODS/PPG/IRT/21**	C	00	08.03.2016
22	Pipes, Fittings, Flanges (Galvanized/ Non-Galvanized/ Seamless/ Welded/ Forged) CS/SS/DSS Nace & Non-Nace	**ODS/PPG/IRT/22**	BULK	00	08.03.2016
23	CPVC Pipes, Fittings, Flanges	**ODS/PPG/IRT/23**	BULK	00	08.03.2016
24	Cu-Ni Pipes, Fittings, Flanges	**ODS/PPG/IRT/24**	BULK	00	08.03.2016
25	Titanium Pipes, Fittings, Flanges	**ODS/PPG/IRT/25**	BULK	00	08.03.2016

Prepared / Revised By	Reviewed By	Approved By

ओएनजीसी ONGC	Offshore Design Section Engineering Services (ISO – 9001:2008)	INSPECTION REQUIREMENT TABLE	IRT No.	ODS/PPG/IRT/01
			Rev. No.	0
			Discipline	PIPING
			Page	1

ITEM : SHUTDOWN VALVES (DSS,CS-NACE,SS-NACE, NAB) | **INSPECTION CATEGORY :A**

ACTIVITY	1. Inspection by ONGC / Certification Agency.(CA)	2. Inspection by ONGC / Third Party Inspection	3.Inspection by EPC/EPC's Inspection by Contractor /TPIA	4. Inspection by Vendor/ Sub Vendor	5. Certificates / Data to be Submitted by Vendor for Review/ Approval	Stage of Inspection Involved
						General & Documents-For Review/Approval/Information
1	A	-	R	H	X	Inspection & Test Plan.
2	R	-	R	H	X	Review of Material Test Certificates (Forming, Heat Treatment, Chemical and Mechanical Properties, Corrosion Test, NACE MR-0175) as per ONGC Spec 2004A Rev 8(As Applicable)
3	R	-	R	H	X	Impact Test/report if required.
4	R	-	R	H	X	Fugitive Emission test certificate (Type test)- As Applicable
5	R	-	R	H	X	API Monogram & Fire safe type test
						Inspection & Testing – For Witness/Random Witness
6	Rw	-	W	H	X	Visual and Dimensional, Tag No. verification.
7	Rw	-	Rw	H	X	NDE of Valve body as applicable 100% RT Flim/UT and Hardness Test of body,bonnet and trims - if applicable.
8	Rw		W	H	X	Seat Leakage Test Hydrostatically and Pneumatically.
9	Rw		W	H	X	Hydrostatic Test of Shell Test (As Applicable).
10	Rw	-	W	H	X	Valve and Actuator Assembly - Valve operation torque test /functional test as per FS 2004A .
11	R		R	R	X	Type Test Report for Actuator
12	Rw	-	W	H	X	Fugitive Emission test (Production test)(As applicable)
13	Rw		Rw	H	X	Impact Test if required
14	Rw		Rw	H	X	Surface Preparation and coating as per FS. 2005 & 2004A
						IRN For Issue by CA/TPI/Contractor IA
15	R		R	H	X	Review of Documents and Check for Completeness against PS/PO.
16	Rw		Rw	H	X	Protective coating, Preservation, End Preparation, Handling and Storage.
17	IS		R	H	X	Issue of Release Note
						IMIR/GIIR at Yard/Offshore
18	R	R		H	X	Material Despatch Report Review& verification of IRN
19	W	W	-	H	X	Verification of item at yard & issue of IMIR/GIIR

LEGENDS & NOTES : Explained Separately

ओएनजीसी ONGC	Offshore Design Section Engineering Services (ISO – 9001:2008)	INSPECTION REQUIREMENT TABLE	IRT No.	ODS/PPG/IRT/02
			Rev. No.	0
			Discipline	PIPING
			Page	1

ITEM : Ball Gate/Globe/Check/DBB Valve CS Nace & Non Nace (2" & above) — **INSPECTION CATEGORY :B**

Activity	1. Inspection by ONGC / Certification Agency.(CA)	2. Inspection by ONGC / Third Party Inspection	3.Inspection EPC/EPC's Inspection by Contractor /TPIA	4. Inspection by Vendor/ Sub Vendor	5. Certificates / Data to be Submitted by Vendor for Review/ Approval	Stage of Inspection Involved
						General & Documents-For Review/Approval/Information
1	A	-	R	H	X	Inspection & Test Plan.
2	R	-	R	H	X	Review of Material Test Certificates (Forming, Heat Treatment, Chemical and Mechanical Properties, Corrosion Test, NACE MR-0175) as per ONGC Spec 2004A Rev 8(As Applicable)
3	R	-	R	H	X	Impact Test report if required.
4	R	-	R	H	X	Fugitive Emission test certificate (Type test)- As Applicable
5	R	-	R	H	X	API Monogram & Fire safe type test report/cert (For Ball Valves)
						Inspection & Testing – For Witness/Random Witness
6	Rw	-	W	H	X	Visual and Dimensional, Tag No. verification.
7	RW	-	Rw	H	X	NDE of Valve body as applicable, 100% RT Flim/UT and Hardness Test of body,bonnet and trims – if applicable.
8	Rw		Rw	H	X	Seat Leakage Test Hydrostatically and Pneumatically.
9	Rw		Rw	H	X	Hydrostatic Test of Shell & Back Seat Test (As Applicable).
10	Rw	-	Rw	H	X	Valve operation torque test /functional test as per FS 2004A .
11	RW		Rw	H	X	Fugitive Emission test (Production test)(As applicable)
12	Rw		Rw	H	X	Impact Test if required
13	RW		Rw	H		Surface Preparation and coating as as per FS. 2005 & 2004A
						IRN For Issue by CA/TPI/Contractor IA
14	R		R	H	X	Review of Documents and Check for Completeness against PS/PO.
15	Rw		Rw	H	X	Protective coating, Preservation, End Preparation, Handling and Storage.
16	IS		R	H	X	Issue of Release Note
						IMIR/GIIR at Yard/Offshore
17	R	R	R	H	X	Material Despatch Report Review& verification of IRN
18	W	W	-	H	X	Verification of item at yard & issue of IMIR/GIIR

LEGENDS & NOTES : Explained Separately

ओएनजीसी ONGC	Offshore Design Section Engineering Services (ISO – 9001:2008)	INSPECTION REQUIREMENT TABLE	IRT No.	ODS/PPG/IRT/03
			Rev. No.	0
			Discipline	PIPING
			Page	1

ITEM : Ball /Gate/Globe/Check Valves DSS,SS (NACE & NON NACE) | **INSPECTION CATEGORY :B**

Activity	1. Inspection by ONGC / Certification Agency.(CA)	2. Inspection by ONGC / Third Party Inspection	3.Inspection EPC/EPC's Inspection by Contractor /TPIA	4. Inspection by Vendor/ Sub Vendor	5. Certificates / Data to be Submitted by Vendor for Review/ Approval	Stage of Inspection Involved
						General & Documents-For Review/Approval/Information
1	A	-	R	H	X	Inspection & Test Plan.
2	R	-	R	H	X	Review of Material Test Certificates (Forming, Heat Treatment, Chemical and Mechanical Properties, Corrosion Test, NACE MR-0175) as per ONGC Spec 2004A Rev 8(As Applicable)
3	R	-	R	H	X	Impact Test report if required.
4	R	-	R	H	X	Fugitive Emission test certificate (Type test)- As Applicable
5	R	-	R	H	X	API Monogram & Fire safe type test report/cert (For Ball Valves)
						Inspection & Testing – For Witness/Random Witness
6	Rw	-	W	H	X	Visual and Dimensional, Tag No. verification.
7	Rw	-	Rw	H	X	NDE of Valve body as applicable, 100% RT Flim/UT and Hardness Test of body,bonnet and trims - if applicable.
8	Rw		Rw	H	X	Seat Leakage Test Hydrostatically and Pneumatically.
9	Rw		Rw	H	X	Hydrostatic Test of Shell & Back Seat Test (As Applicable).
10	Rw	-	Rw	H	X	Valve operation torque test /functional test as per FS 2004A .
11	Rw		Rw	H	X	Fugitive Emission test (Production test)(As applicable)
12	Rw		Rw	H	X	Impact Test if required.
13	Rw		Rw	H		Surface Preparation and coating as as per FS. 2005 & 2004A
						IRN For Issue by CA/TPI/Contractor IA
14	R		R	H	X	Review of Documents and Check for Completeness against PS/PO.
15	Rw		Rw	H	X	Protective coating, Preservation, End Preparation, Handling and Storage.
16	IS		R	H	X	Issue of Release Note
						IMIR/GIIR at Yard/Offshore
17	R	R		H	X	Material Despatch Report Review& verification of IRN
18	W	W	-	H	X	Verification of item at yard & issue of IMIR/GIIR

LEGENDS & NOTES : Explained Separately

FORMAT No.	Ref. PROCEDURE No.	ISSUE No.	REV. No.	REV. DATE:
ODS/SOF/004A	ODS/SOP/023	01	00	08.03.2016

ओएनजीसी ONGC	Offshore Design Section Engineering Services (ISO – 9001:2008)	INSPECTION REQUIREMENT TABLE	IRT No.	ODS/PPG/IRT/04
			Rev. No.	0
			Discipline	PIPING
			Page	1

ITEM: CHOKE VALVES	INSPECTION CATEGORY :B

Activity	1. Inspection by ONGC / Certification Agency.(CA)	2. Inspection by ONGC / Third Party Inspection Agency (TPI)	3.Inspection by EPC/EPC's Inspection by Contractor /TPIA	4. Inspection by Vendor/ Sub Vendor	5. Certificates / Data to be Submitted by Vendor for Review/ Approval	Stage of Inspection Involved
						General & Documents-For Review/Approval/Information
1	A	-	R	H	X	Quality Plan
2	R	-	R	H	X	Material Identification
3	R		R	H	X	Review of Material Test Certificates (Forming, Heat Treatment, Chemical and Mechanical Properties, Corrosion Test) as per ONGC Spec 2004A Rev 8(As Applicable)
						Inspection & Testing – For Witness/Random Witness
4	Rw	-	W	H	X	Visual and Dimension Check
5	Rw		Rw	H	X	Seat Leakage Test Hydrostatically and Pneumatically.
6	Rw		Rw	H	X	Hydrostatic Test of Shell & Back Seat Test (As Applicable).
7	Rw	-	Rw	H	X	Valve operation torque test (Unseating and Normal Operation) /functional test as per FS2004D
8	Rw	-	Rw	H	X	NDE of Valve body as applicable, 100% RT Flim/UT and Hardness Test of body, bonnet and trims - if applicable
9	Rw		Rw		X	Surface Preparation & Protective Coating asper FS 2005
						IRN For Issue by CA/TPI/Contractor IA
10	R		R	H	X	Review of Documents and Check for Completeness against PS/PO.
11	Rw		Rw	H	X	Protective coating, Preservation, End Preparation, Handling and Storage.
12	IS		R	H	X	Issue of Release Note
						IMIR/GIIR at Yard/Offshore
13	R	R		H	X	Material Despatch Report Review& verification of IRN
14	W	W	-	H	X	Verification of item at yard & issue of IMIR/GIIR

LEGENDS & NOTES : **Explained Separately**

FORMAT No.	Ref. PROCEDURE No.	ISSUE No.	REV. No.	REV. DATE:
ODS/SOF/004A	ODS/SOP/023	01	00	08.03.2016

ओएनजीसी ONGC	Offshore Design Section Engineering Services (ISO – 9001:2008)	INSPECTION REQUIREMENT TABLE	IRT No.	ODS/PPG/IRT/05
			Rev. No.	0
			Discipline	PIPING
			Page	1

ITEM : Bronze Valves | **INSPECTION CATEGORY :B**

Activity	1. Inspection by ONGC / Certification Agency.(CA)	2. Inspection by ONGC / Third Party Inspection Agency (TPI)	3. Inspection by EPC/EPC's Inspection by Contractor /TPIA	4. Inspection by Vendor/ Sub Vendor	5. Certificates / Data to be Submitted by Vendor for Review/ Approval	Stage of Inspection Involved
						General & Documents-For Review/Approval/Information
1	A	-	R	H	X	Inspection & Test Plan.
2	A	-	R	H	X	Submission of Hydrotest procedure, painting procedure etc.(As applicable)
3	R	-	R	H	X	Material Test Certificates & Verification of Traceability records and NDT records.(As ONGC FS2004A Rev.8)
						Inspection & Testing – For Witness/Random Witness
4	Rw	-	Rw	H	X	NDE of Valve body as applicable, 100% RT Flim/UT and Hardness Test of body,bonnet and trims - if applicable.
5	Rw	-	Rw	H	X	Hydrostatic Test of Shell & Back Seat (As Applicable), , Hydro test and Pneumatic tests on seats
6	Rw	-	W	H	X	Visual and Dimensional.
7	Rw	-	Rw	H	X	Functional / operation torque As applicable.
8	Rw	-	Rw	H	X	Surface preparation and Protective coating as per ONGC spec 2005
						IRN For Issue by CA/TPI/Contractor IA
9	R		H	H	X	Review of Documents and Check for Completeness against PS/PO.
10	Rw		Rw	H	X	Protective coating, Preservation, End Preparation, Handling and Storage.
11	IS		R	H	X	Issue of Release Note
						IMIR/GIIR at Yard/Offshore
12	R	R		H	X	Material Despatch Report Review& verification of IRN
13	W	W	-	H	X	Verification of item at yard & issue of IMIR/GIIR

LEGENDS & NOTES : Explained Separately

ओएनजीसी ONGC	Offshore Design Section Engineering Services (ISO – 9001:2008)	INSPECTION REQUIREMENT TABLE	IRT No.	ODS/PPG/IRT/06
			Rev. No.	0
			Discipline	PIPING
			Page	1

ITEM : Gate/Globe/Check/Ball/Needle Valve CS NACE & NON-NACE(BELOW 2") — **INSPECTION CATEGORY :C**

Activity	1. Inspection by ONGC / Certification Agency.(CA)	2. Inspection by ONGC / Third Party Inspection	3.Inspection EPC/EPC's Inspection by Contractor /TPIA	4. Inspection by Vendor/ Sub Vendor	5. Certificates / Data to be Submitted by Vendor for Review/ Approval	Stage of Inspection Involved
						General & Documents-For Review/Approval/Information
1	A	-	R	H	X	Inspection & Test Plan.
2	R	-	R	H	X	Review of Material Test Certificates (Forming, Heat Treatment, Chemical and Mechanical Properties, Corrosion Test, NACE MR-0175) as per ONGC Spec 2004A Rev 8(As Applicable)
3	R	-	R	H	X	Impact Test if required.
4	R	-	R	H	X	Fugitive Emission test certificate (Type test)- As Applicable
5	R	-	R	H	X	API Monogram & Fire safe type test report/cert (For Ball Valves)
						Inspection & Testing – For Witness/Random Witness
6	-	-	W	H	X	Visual and Dimensional, Tag No. verification.
7	-	-	Rw	H	X	NDE of Valve body as applicable, 100% RT Flim/UT and Hardness Test of body,bonnet and trims - if applicable.
8	-		Rw	H	X	Seat Leakage Test Hydrostatically and Pneumatically.
9	-		Rw	H	X	Hydrostatic Test of Shell & Back Seat Test (As Applicable).
10	-	-	Rw	H	X	Valve operation torque test /functional test as per FS 2004A .
11	-		Rw	H	X	Fugitive Emission test (Production test)(As applicable)
12	-		Rw	H		Surface Preparation and coating as as per FS. 2005 & 2004A
						IRN For Issue by CA/TPI/Contractor IA
13			R	H	X	Review of Documents and Check for Completeness against PS/PO.
14			Rw	H	X	Protective coating, Preservation, End Preparation, Handling and Storage.
15			IS	H	X	Issue of Release Note
						IMIR/GIIR at Yard/Offshore
16	R	R		H	X	Material Despatch Report Review& verification of IRN
17	W	W	-	H	X	Verification of item at yard & issue of IMIR/GIIR

LEGENDS & NOTES : Explained Separately

ओएनजीसी ONGC	Offshore Design Section Engineering Services (ISO – 9001:2008)	INSPECTION REQUIREMENT TABLE	IRT No.	ODS/PPG/IRT/07
			Rev. No.	0
			Discipline	PIPING
			Page	1

ITEM : SCRAPPER TEE | **INSPECTION CATEGORY :B**

Activity	1. Inspection by ONGC / Certification Agency.(CA)	2. Inspection by ONGC / Third Party Inspection Agency (TPI)	3. Inspection by EPC/EPC's Inspection by Contractor /TPIA	4. Inspection by Vendor/ Sub Vendor	5. Certificates / Data to be Submitted by Vendor for Review/ Approval	Stage of Inspection Involved
						General & Documents-For Review/Approval/Information
1	A	-	R	H	X	Inspection & Test Plan.
2	R	-	R	H	X	Material Identification, Material test certificates
3	R		A	H	X	WPS/PQR/WPQ,PWHT records & Procedure as applicable (In case of any new PQR and WPQR, it should be qualified under witness of TPI)
5	R	-	R	H	X	Manufacturer's test certificates in compliance to ONGC FS 2004D Rev. 6
						Inspection & Testing
6	Rw	-	W	H	X	Inspection Marking and Tagging
7	R	-	R	H	X	Compliance to Purchase/ONGC Technical Specification & Approved drawings
8	Rw	-	W	H	X	Visual and Dimension Check
9	Rw		Rw	H	X	NDE requirements and Records (RT/UT/MPI/DPT-as applicable)
10	Rw		Rw	H	X	Hydro-test
11	Rw		Rw	H	X	Painting (As Applicable)
						IRN For Issue by CA/TPI/Contractor IA
12	R		R	H	X	Review of Documents and Check for Completeness against PS/PO.
13	Rw		Rw	H	X	Protective coating, Preservation, End Preparation, Handling and Storage.
14	IS		R	H	X	Issue of Release Note
						IMIR/GIIR at Yard/Offshore
15	R	R		H	X	Material Despatch Report Review& verification of IRN
16	W	W	-	H	X	Verification of item at yard & issue of IMIR/GIIR

LEGENDS & NOTES : Explained Separately

ओएनजीसी ONGC	Offshore Design Section Engineering Services (ISO – 9001:2008)	INSPECTION REQUIREMENT TABLE	IRT No.	ODS/PPG/IRT/08
			Rev. No.	0
			Discipline	PIPING
			Page	1

ITEM : HINGE CLOSURE | **INSPECTION CATEGORY :B**

Activity	1. Inspection by ONGC / Certification Agency.(CA)	2. Inspection by ONGC / Third Party Inspection Agency (TPI)	3. Inspection by EPC/EPC's Inspection by Contractor /TPIA	4. Inspection by Vendor/ Sub Vendor	5. Certificates / Data to be Submitted by Vendor for Review/ Approval	Stage of Inspection Involved
						General & Documents-For Review/Approval/Information
1	A	-	R	H	X	Inspection & Test Plan.
2	R	-	R	H	X	Material Identification, Material test certificates & Design Certification By ASME approved TPI as per ONGC FS 2004D Rev 6
3	R		R	H	X	WPS/PQR/WPQ,PWHT records & Procedure as applicable (In case of any new PQR and WPQR, it should be qualified under witness of TPI)
4	R	-	R	H	X	Manufacturer's test certificates in compliance to ONGC specification
						Inspection & Testing
5	Rw	-	W	H	X	Inspection Marking and Tagging
6	R	-	R	H	X	Compliance to Purchase/ONGC Technical Specification & Approved drawings
7	Rw	-	W	H	X	Visual and Dimension Check
8	Rw		Rw	H	X	NDE requirements and Records (RT/UT/MPI/DPT-as applicable)
9	Rw		Rw	H	X	Hydro test
10	Rw		Rw	H	X	Painting (As Applicable)
						IRN For Issue by CA/TPI/Contractor IA
11	R		H	H	X	Review of Documents and Check for Completeness against PS/PO.
12	Rw		Rw	H	X	Protective coating, Preservation, End Preparation, Handling and Storage.
13	IS		R	H	X	Issue of Release Note
						IMIR/GIIR at Yard/Offshore
14	R	R		H	X	Material Despatch Report Review& verification of IRN
15	W	W	-	H	X	Verification of item at yard & issue of IMIR/GIIR

LEGENDS & NOTES : Explained Separately

FORMAT No.	Ref. PROCEDURE No.	ISSUE No.	REV. No.	REV. DATE:
ODS/SOF/004A	ODS/SOP/023	01	00	08.03.2016

ओएनजीसी ONGC	Offshore Design Section Engineering Services (ISO – 9001:2008)	INSPECTION REQUIREMENT TABLE	IRT No.	ODS/PPG/IRT/09
			Rev. No.	0
			Discipline	PIPING
			Page	1

ITEM : Corrosion Coupon & Retrieval KIT	**INSPECTION CATEGORY :C**

Activity	1. Inspection by ONGC / Certification Agency.(CA)	2. Inspection by EPC/EPC's Inspection by Contractor /TPIA	3.Inspection by ONGC / Third Party Inspection Agency (TPI)	4. Inspection by Vendor/ Sub Vendor	5.Certificates/Data to be Submitted by Vendor for Review/Approval	Stage of Inspection Involved
						General & Documents-For Review/Approval/Information
1	A	-	R	H	X	Inspection & Test Plan.
2	R		R	H	X	Material Test Certificates & Compliance Certificates as per ONGC FS2004A Rev. 8
3	R	-	R	H	X	Manufacturer's test certificates in compliance to ONGC specification
4						**Inspection & Testing**
5		-	W	H	X	Material Identification ,Inspection Marking and Tagging
6		-	R	H	X	Compliance to Purchase/ONGC Technical Specification & Approved drawings.
7		-	W	H	X	Visual and Dimension Check
8			Rw	H	X	NDE requirements and Records (RT/UT/MPI/DPT-as applicable)
9			Rw	H	X	Hydrostatic & leak Test
10			Rw	H	X	Painting
						IRN For Issue by CA/TPI/Contractor IA
11			R	H	X	Review of Documents and Check for Completeness against PS/PO.
12			Rw	H	X	Protective coating, Preservation, End Preparation, Handling and Storage.
13			IS	H	X	Issue of Release Note
						IMIR/GIIR at Yard/Offshore
14	R	R		H	X	Material Despatch Report Review& verification of IRN
15	W	W	-	H	X	Verification of item at yard & issue of IMIR/GIIR

LEGENDS & NOTES : Explained Separately

FORMAT No.	Ref. PROCEDURE No.	ISSUE No.	REV. No.	REV. DATE:
ODS/SOF/004A	ODS/SOP/023	01	00	08.03.2016

ओएनजीसी ONGC	Offshore Design Section Engineering Services (ISO – 9001:2008)	INSPECTION REQUIREMENT TABLE	IRT No.	ODS/PPG/IRT/10
			Rev. No.	0
			Discipline	PIPING
			Page	1

ITEM : PIG INDICATOR | **INSPECTION CATEGORY :C**

Activity	1. Inspection by ONGC / Certification Agency.(CA)	2. Inspection by ONGC / Third Party Inspection Agency (TPI)	3. Inspection by EPC/EPC's Inspection by Contractor /TPIA	4. Inspection by Vendor/ Sub Vendor	5. Certificates / Data to be Submitted by Vendor for Review/ Approval	Stage of Inspection Involved
						General & Documents-For Review/Approval/Information
1	A	-	R	H	X	Inspection & Test Plan.
2	R	-	R	H	X	Material test certificates & records. WPS/PQR/WPQ, Fire safe certification
3	R		R	H	X	Weather Proof, Explosion Proof certificates from authorised agency as per ONGC FS 2004D,Rev 6
4	R	-	R	H	X	Compliance with PS & Approved drawings.
5	R	-	R	H	X	Manufacturer's test certificates in compliance to ONGC specification
						Inspection & Testing – For Witness/Random Witness
6		-	W	H	X	Material Identification ,Inspection Marking and Tagging
7		-	Rw	H	X	Visual and Dimension Check
8			Rw	H	X	NDE requirements and Records (RT/UT/MPI/DPT-as applicable)
9			Rw	H	X	Painting (As Applicable)
						IRN For Issue by CA/TPI/Contractor IA
10			R	H	X	Review of Documents and Check for Completeness against PS/PO.
11			Rw	H	X	Protective coating, Preservation, End Preparation, Handling and Storage.
12			IS	H	X	Issue of Release Note
						IMIR/GIIR at Yard/Offshore
13	R	R		H	X	Material Despatch Report Review& verification of IRN
14	W	W	-	H	X	Verification of item at yard & issue of IMIR/GIIR

LEGENDS & NOTES : Explained Separately

FORMAT No.	Ref. PROCEDURE No.	ISSUE No.	REV. No.	REV. DATE:
ODS/SOF/004A	ODS/SOP/023	01	00	08.03.2016

ओएनजीसी ONGC	Offshore Design Section Engineering Services (ISO – 9001:2008)	INSPECTION REQUIREMENT TABLE	IRT No.	ODS/PPG/IRT/11
			Rev. No.	0
			Discipline	PIPING
			Page	1

ITEM : FWHR | **INSPECTION CATEGORY :C**

Activity	1. Inspection by ONGC / Certification Agency.(CA)	2. Inspection by ONGC / Third Party Inspection Agency (TPI)	3. Inspection by EPC/EPC's Inspection by Contractor /TPIA	4. Inspection by Vendor/ Sub Vendor	5. Certificates/Data to be Submitted by Vendor for Review/ Approval	Stage of Inspection Involved
						General & Documents-For Review/Approval/Information
1	A	-	R	H	X	Inspection & Test Plan.
2	R		R	H	X	Material Test Certificates & Compliance Certificates & UL / US coast Guard / FM Certification of FWHR as per ONGC FS 2004D Rev. 6
3	R	-	R	H	X	Manufacturer's test certificates in compliance to ONGC specification
						Inspection & Testing – For Witness/Random Witness
4		-	W	H	X	Material Identification ,Inspection Marking and Tagging
5		-	R	H	X	Compliance to Purchase/ONGC Technical Specification & Approved drawings.
6		-	Rw	H	X	Visual and Dimension Check
7			Rw	H	X	NDE requirements and Records (RT/UT/MPI/DPT-as applicable)
8			Rw	H	X	Hydrostatic & leak Test
9			Rw	H	X	Painting
						IRN For Issue by CA/TPI/Contractor IA
10			R	H	X	Review of Documents and Check for Completeness against PS/PO.
11			Rw	H	X	Protective coating, Preservation, End Preparation, Handling and Storage.
12			IS	H	X	Issue of Release Note
						IMIR/GIIR at Yard/Offshore
13	R	R		H	X	Material Despatch Report Review& verification of IRN
14	W	W	-	H	X	Verification of item at yard & issue of IMIR/GIIR

LEGENDS & NOTES : Explained Separately

FORMAT No.	Ref. PROCEDURE No.	ISSUE No.	REV. No.	REV. DATE:
ODS/SOF/004A	ODS/SOP/023	01	00	08.03.2016

ओएनजीसी ONGC	Offshore Design Section Engineering Services (ISO – 9001:2008)	INSPECTION REQUIREMENT TABLE	IRT No.	ODS/PPG/IRT/12
			Rev. No.	0
			Discipline	PIPING
			Page	1

ITEM : STRAINERS | **INSPECTION CATEGORY :C**

Activity	1. Inspection by ONGC / Certification Agency.(CA)	2. Inspection by ONGC / Third Party Inspection	3. Inspection by EPC/EPC's Inspection by Contractor /TPIA	4. Inspection by Vendor/ Sub Vendor	5. Certificates/Data to be Submitted by Vendor for Review/ Approval	Stage of Inspection Involved
						General & Documents-For Review/Approval/Information
1	A	-	R	H	X	Quality Control Plan
2	R	-	R	H	X	Review of Material test certificates and records as per ONGC FS 2004D Rev. 6
3	R	-	A	H	X	WPS/PQR/WPQ for all welding. (In case of any new PQR and WPQR, it should be qualified under witness of TPI)
						Inspection & Testing – For Witness/Random Witness
4			W			Material Identification
5			Rw	H	X	NDT(As applicable)
6			Rw	H	X	Hydrostatic Test for strainers.
7		-	W	H	X	Visual/Dimensional Check.
8		-	Rw	H	X	Protection coating for strainers.
						IRN For Issue by CA/TPI/Contractor IA
9			R	H	X	Review of Documents and Check for Completeness against PS/PO.
10			Rw	H	X	Protective coating, Preservation, End Preparation, Handling and Storage.
11			IS	H	X	Issue of Release Note
						IMIR/GIIR at Yard/Offshore
12	R	R		H	X	Material Despatch Report Review& verification of IRN
13	W	W	-	H	X	Verification of item at yard & issue of IMIR/GIIR

LEGENDS & NOTES : Explained separately

FORMAT No.	Ref. PROCEDURE No.	ISSUE No.	REV. No.	REV. DATE:
ODS/SOF/004A	ODS/SOP/023	01	00	08.03.2016

	Offshore Design Section Engineering Services (ISO – 9001:2008)	INSPECTION REQUIREMENT TABLE	IRT No.	ODS/PPG/IRT/13
			Rev. No.	0
			Discipline	PIPING
			Page	1

ITEM : Spray Nozzles	INSPECTION CATEGORY :C

Activity	1. Inspection by ONGC / Certification Agency.(CA)	2. Inspection by ONGC / Third Party Inspection Agency (TPI)	3. Inspection by EPC/EPC's Inspection by Contractor /TPIA	4. Inspection by Vendor/ Sub Vendor	5. Certificates / Data to be Submitted by Vendor for Review/ Approval	Stage of Inspection Involved
						General & Documents-For Review/Approval/Information
1	A	-	R	H	X	Inspection & Test Plan.
2	R		R	H	X	Material Test Certificates & Certificates of Approval from Authorities as per ONGC FS 2004D Rev. 6
3	R	-	R	H	X	Manufacturer's test certificates in compliance to ONGC specification
						Inspection & Testing
4			W	H	X	Material Identification
5		-	Rw	H	X	Inspection Marking and Tagging
6		-	R	H	X	Compliance to Purchase/ONGC Technical Specification & Approved drawings.
7		-	W	H	X	Visual and Dimension Check
8			Rw	H	X	NDE requirements and Records (RT/UT/MPI/DPT-as applicable)
9			Rw	H	X	Hydrostatic Test
10			Rw	H	X	Painting (As Applicable)
						IRN For Issue by CA/TPI/Contractor IA
12			R	H	X	Review of Documents and Check for Completeness against PS/PO.
13			Rw	H	X	Protective coating, Preservation, End Preparation, Handling and Storage.
14			IS	H	X	Issue of Release Note
						IMIR/GIIR at Yard/Offshore
15	R	R		H	X	Material Despatch Report Review& verification of IRN
16	W	W	-	H	X	Verification of item at yard & issue of IMIR/GIIR

LEGENDS & NOTES : Explained separately

FORMAT No.	Ref. PROCEDURE No.	ISSUE No.	REV. No.	REV. DATE:
ODS/SOF/004A	ODS/SOP/023	01	00	08.03.2016

ओएनजीसी ONGC	Offshore Design Section Engineering Services (ISO – 9001:2008)	INSPECTION REQUIREMENT TABLE	IRT No.	ODS/PPG/IRT/14
			Rev. No.	0
			Discipline	PIPING
			Page	1

ITEM : Continuous Drainer | **INSPECTION CATEGORY :C**

Activity	1. Inspection by ONGC / Certification Agency.(CA)	2. Inspection by ONGC / Third Party Inspection Agency (TPI)	3. Inspection by EPC/EPC's Inspection by Contractor /TPIA	4. Inspection by Vendor/ Sub Vendor	5. Certificates / Data to be Submitted by Vendor for Review/ Approval	Stage of Inspection Involved
						General & Documents-For Review/Approval/Information
1	A	-	R	H	X	Quality Plan & Applicable QA/QC Procedure
2	R		R	H	X	Material Test Certificates & Compliance Certificates as per ONGC FS 2004D Rev. 6
3	R	-	R	H	X	WPS,.
						Inspection & Testing – For Witness/Random Witness
4			W	H	X	Visual and Dimensional Check
5		-	Rw	H	X	NDE as applicable
6			Rw	H	X	Hydro testing
7			Rw	H	X	Surface Preparation and Coating
						IRN For Issue by CA/TPI/Contractor IA
8			R	H	X	Review of Documents and Check for Completeness against PS/PO.
9			Rw	H	X	Protective coating, Preservation, End Preparation, Handling and Storage.
10			IS	H	X	Issue of Release Note
						IMIR/GIIR at Yard/Offshore
11	R	R		H	X	Material Despatch Report Review& verification of IRN
12	W	W	-	H	X	Verification of item at yard & issue of IMIR/GIIR

LEGENDS & NOTES : Explained separately

ओएनजीसी ONGC	Offshore Design Section Engineering Services (ISO – 9001:2008)	INSPECTION REQUIREMENT TABLE	IRT No.	ODS/PPG/IRT/15
			Rev. No.	0
			Discipline	PIPING
			Page	1

ITEM : 5 D Bends	INSPECTION CATEGORY :B

Activity	1. Inspection by ONGC / Certification Agency.(CA)	2. Inspection by ONGC / Third Party Inspection Agency (TPI)	3. Inspection by EPC/EPC's Inspection by Contractor /TPIA	4. Inspection by Vendor/ Sub Vendor	5. Certificates / Data to be Submitted by Vendor for Review/ Approval	Stage of Inspection Involved
						General & Documents-For Review/Approval/Information
1	A	-	R	H	X	Inspection & Test Plan.
2	R	-	R	H	X	Material test certificates & NACE MR -0175 Compliance
3	R		R	H	X	Manufacturing Procedure, Heat treatment procedure, Bending Procedure for 5D bends NDT procedures, NDT Technicians certificates & Testing procedures inline as per ONGC FS 2004D Rev. 6
4	R	-	R	H	X	Compliance with PS & Approved drawings.
5	R	-	R	H	X	Manufacturer's test certificates in compliance to ONGC specification
						Inspection & Testing
6	Rw	-	W	H	X	Material Identification, Inspection Marking and Tagging
7	R	-	R	H	X	Compliance to Purchase/ONGC Technical Specification, Chemical analysis, Corrosion tests & Mechanical Tests as per ONGC FS 2004D Rev. 6
8	Rw	-	W	H	X	Visual and Dimension Check
9	Rw		Rw	H	X	NDE requirements and Records (RT/UT/MPI/DPT-as applicable)
10	W		W	H	X	Hydro test
11	Rw		RW	H	X	Painting (As Applicable)
						IRN For Issue by CA/TPI/Contractor IA
12	R		R	H	X	Review of Documents and Check for Completeness against PS/PO.
13	Rw		Rw	H	X	Protective coating, Preservation, End Preparation, Handling and Storage.
14	IS		R	H	X	Issue of Release Note
						IMIR/GIIR at Yard/Offshore
15	R	R		H	X	Material Despatch Report Review& verification of IRN
16	W	W	-	H	X	Verification of item at yard & issue of IMIR/GIIR

LEGENDS & NOTES : Explained separately

ओएनजीसी ONGC	Offshore Design Section Engineering Services (ISO – 9001:2008)	INSPECTION REQUIREMENT TABLE	IRT No.	ODS/PPG/IRT/16
			Rev. No.	0
			Discipline	PIPING
			Page	1

ITEM : HOSE AND HOSE CONNECTION | **INSPECTION CATEGORY :C**

Activity	1. Inspection by ONGC / Certification Agency.(CA)	2. Inspection by EPC/EPC's Inspection by Contractor /TPIA	3.Inspection by ONGC / Third Party Inspection Agency (TPI)	4. Inspection by Vendor/ Sub Vendor	5. Certificates / Data to be Submitted by Vendor for Review/ Approval	Stage of Inspection Involved
						General & Documents-For Review/Approval/Information
1	A	-	R	H	X	Inspection & Test Plan.
2	R		R	H	X	Material Test Certificates & Compliance Certificates
3	R	-	R	H	X	Compliance with PS & Approved drawings.
4	R	-	R	H	X	Manufacturer's test certificates in compliance to ONGC FS2004D Rev. 6
						Inspection & Testing – For Witness/Random Witness
5		-	W	H	X	Material Identification ,Inspection Marking and Tagging
6		-	R	H	X	Compliance to Purchase/ONGC Technical Specification
7		-	W	H	X	Visual and Dimension Check
8			Rw	H	X	NDE requirements and Records (RT/UT/MPI/DPT-as applicable)
9			RW	H	X	Hydrostatic & leak Test
10			RW	H	X	Painting
						IRN For Issue by CA/TPI/Contractor IA
11			R	H	X	Review of Documents and Check for Completeness against PS/PO.
12			Rw	H	X	Protective coating, Preservation, End Preparation, Handling and Storage.
13			IS	H	X	Issue of Release Note
						IMIR/GIIR at Yard/Offshore
14	R	R		H	X	Material Despatch Report Review& verification of IRN
15	W	W	-	H	X	Verification of item at yard & issue of IMIR/GIIR

LEGENDS & NOTES : Explained separately

FORMAT No.	Ref. PROCEDURE No.	ISSUE No.	REV. No.	REV. DATE:
ODS/SOF/004A	ODS/SOP/023	01	00	08.03.2016

	Offshore Design Section Engineering Services (ISO – 9001:2008)	INSPECTION REQUIREMENT TABLE	IRT No.	ODS/PPG/IRT/22
			Rev. No.	0
			Discipline	PIPING
			Page	1

ITEM : Sample Bomb | **INSPECTION CATEGORY :C**

Activity						
	1. Inspection by ONGC / Certification Agency.(CA)					
		2. Inspection by ONGC / Third Party Inspection				
			3. Inspection by EPC/EPC's Inspection by Contractor /TPIA			
				4. Inspection by Vendor/ Sub Vendor		
					5. Certificates / Data to be Submitted by Vendor for Review/ Approval	
						Stage of Inspection Involved
						General & Documents-For Review/Approval/Information
1	A	-	R	H	X	Quality Control Plan
2	R	-	R	H	X	Material identification Report & test certificates.
3	R	-	R	H	X	Compliance to piping class and sample tag No.
4	R		R			WPS,PQR and WPQ
5	R	-	R	H	X	Fabrication drawing.
						Inspection & Testing – For Witness/Random Witness
6			W			Material identification
7			RW	H	X	NDT as applicable
8		-	W	H	X	Hydro test (as applicable)
9		-	W	H	X	Pneumatic test for Seat leak of needle valve (as applicable)
10			Rw	H		Surface Preparation and coating inspection (as applicable)
						IRN For Issue by CA/TPI/Contractor IA
11			R	H	X	Review of Documents and Check for Completeness against PS/PO.
12			Rw	H	X	Protective coating, Preservation, End Preparation, Handling and Storage.
13			IS	H	X	Issue of Release Note
						IMIR/GIIR at Yard/Offshore
14	R	R		H	X	Material Despatch Report Review& verification of IRN
15	W	W	-	H	X	Verification of item at yard & issue of IMIR/GIIR

LEGENDS & NOTES : Explained separately

ओएनजीसी ONGC	Offshore Design Section Engineering Services (ISO – 9001:2008)	INSPECTION REQUIREMENT TABLE	IRT No.	ODS/PPG/IRT/18
			Rev. No.	0
			Discipline	PIPING
			Page	1

ITEM : MULTI PORT VALVES | **INSPECTION CATEGORY :A**

ACTIVITY	1. Inspection by ONGC / Certification Agency.(CA)	2. Inspection by ONGC / Third Party Inspection	3.Inspection by EPC/EPC's Inspection by Contractor /TPIA	4. Inspection by Vendor/ Sub Vendor	5. Certificates / Data to be Submitted by Vendor for Review/ Approval	Stage of Inspection Involved
						General & Documents-For Review/Approval/Information
1	A	-	R	H	X	Inspection & Test Plan.
2	R	-	R	H	X	Review of Material Test Certificates (Forming, Heat Treatment, Chemical and Mechanical Properties, Corrosion Test, NACE MR-0175) as per ONGC Spec 2004A Rev 8(As Applicable)
3	R	-	R	H	X	Impact Test Report if required.
4	R	-	R	H	X	Fugitive Emission test certificate (Type test)- As Applicable
5	R	-	R	H	X	API Monogram & Fire safe type test Report/Cert.
						Inspection & Testing – For Witness/Random Witness
6	Rw	-	W	H	X	Visual and Dimensional, Tag No. verification.
7	Rw	-	Rw	H	X	NDE of Valve body as applicable 100% RT Flim/UT and Hardness Test of body,bonnet and trims - if applicable.
8	Rw		W	H	X	Seat Leakage Test Hydrostatically and Pneumatically.
9	Rw		W	H	X	Hydrostatic Test of Shell Test (As Applicable).
10	Rw	-	W	H	X	Valve and Actuator Assembly - Valve operation torque test /functional test as per FS 2004A.
11	R		R	H	X	PMI (**Positive Material Identification) test Report** for alloy Steel material
12	Rw	-	W	H	X	Fugitive Emission test (Production test)(As applicable)
13	W		W	H	X	Impact Test if required.
14	Rw		Rw	H	X	Surface Preparation and coating as per FS. 2005 & 2004A
						IRN For Issue by CA/TPI/Contractor IA
15	R		R	H	X	Review of Documents and Check for Completeness against PS/PO.
16	R		Rw	H	X	Protective coating, Preservation, End Preparation, Handling and Storage.
17	IS		R	H	X	Issue of Release Note
						IMIR/GIIR at Yard/Offshore
18	R	R		H	X	Material Despatch Report Review& verification of IRN
19	W	W	-	H	X	Verification of item at yard & issue of IMIR/GIIR

LEGENDS & NOTES : Explained Separately

FORMAT No.	Ref. PROCEDURE No.	ISSUE No.	REV. No.	REV. DATE:
ODS/SOF/004A	ODS/SOP/023	01	00	08.03.2016

ओएनजीसी ONGC	Offshore Design Section Engineering Services (ISO – 9001:2008)	INSPECTION REQUIREMENT TABLE	IRT No. ODS/PPG/IRT/19
			Rev. No. 0
			Discipline PIPING
			Page 1

ITEM : Flame Arrester | **INSPECTION CATEGORY :C**

Activity	1. Inspection by ONGC / Certification Agency.(CA)	2. Inspection by ONGC / Third Party Inspection Agency (TPI)	3. Inspection EPC/EPC's Inspection by Contractor /TPIA	4. Inspection by Vendor/ Sub Vendor	5. Certificates / Data to be Submitted by Vendor for Review/ Approval	Stage of Inspection Involved
						General & Documents-For Review/Approval/Information
1	A	-	R	H	X	Inspection & Test Plan.
2	R	-	R	H	X	Material Identification Report
3	R		R	H	X	Material Test Certificates & Certificates of Approval from Authorities as per Specification
4	R	-	R	H	X	Compliance with PS & Approved drawings.
5	R	-	R	H	X	Manufacturer's test certificates in compliance to ONGC Specification
						Inspection & Testing
6		-	W	H	X	Material Identification ,Inspection Marking and Tagging
7		-	R	H	X	Compliance to Purchase/ONGC Technical Specification
8		-	W	H	X	Final Visual and Dimension Check
9			W	H	X	NDE requirements and Records (RT/UT/MPI/DPT-as applicable)
10			RW	H	X	Hydrostatic Test
11			RW	H	X	Painting (As Applicable)
						IRN For Issue by CA/TPI/Contractor IA
14			R	H	X	Review of Documents and Check for Completeness against PS/PO.
15			Rw	H	X	Protective coating, Preservation, End Preparation, Handling and Storage.
16			IS	H	X	Issue of Release Note
						IMIR/GIIR at Yard/Offshore
17	R	R		H	X	Material Despatch Report Review& verification of IRN
18	W	W	-	H	X	Verification of item at yard & issue of IMIR/GIIR

LEGENDS & NOTES : Explained separately

FORMAT No.	Ref. PROCEDURE No.	ISSUE No.	REV. No.	REV. DATE:
ODS/SOF/004A	ODS/SOP/023	01	00	08.03.2016

ओएनजीसी ONGC	Offshore Design Section Engineering Services (ISO – 9001:2008)	INSPECTION REQUIREMENT TABLE	IRT No. ODS/PPG/IRT/20
			Rev. No. 0
			Discipline PIPING
			Page 1

ITEM : Inline Seperator | **INSPECTION CATEGORY :C**

Activity	1. Inspection by ONGC / Certification Agency.(CA)	2. Inspection by ONGC / Third Party Inspection Agency (TPI)	3. Inspection EPC/EPC's Inspection by Contractor /TPIA	4. Inspection by Vendor/ Sub Vendor	5. Certificates / Data to be Submitted by Vendor for Review/ Approval	Stage of Inspection Involved
						General & Documents-For Review/Approval/Information
1	A	-	R	H	X	Inspection & Test Plan.
2	R.	-	R	H	X	Material Identification Report
3	R		R	H	X	Material Test Certificates & Certificates of Approval from Authorities as per Specification 2004F Rev. 0
4	R	-	R	H	X	Compliance with PS & Approved drawings.
5	R	-	R	H	X	Manufacturer's test certificates in compliance to ONGC Specification
						Inspection & Testing
6		-	RW	H	X	Material Identification ,Inspection Marking and Tagging
7		-	R	H	X	Compliance to Purchase/ONGC Technical Specification
8		-	W	H	X	Final Visual and Dimension Check
9			Rw	H	X	NDE requirements and Records (RT/UT/MPI/DPT-as applicable)
10			RW	H	X	Hydrostatic Test
11			RW	H	X	Painting (As Applicable)
						IRN For Issue by CA/TPI/Contractor IA
14			R	H	X	Review of Documents and Check for Completeness against PS/PO.
15			Rw	H	X	Protective coating, Preservation, End Preparation, Handling and Storage.
16			IS	H	X	Issue of Release Note
						IMIR/GIIR at Yard/Offshore
17	R	R		H	X	Material Despatch Report Review& verification of IRN
18	W	W	-	H	X	Verification of item at yard & issue of IMIR/GIIR

LEGENDS & NOTES : Explained separately

FORMAT No.	Ref. PROCEDURE No.	ISSUE No.	REV. No.	REV. DATE:
ODS/SOF/004A	ODS/SOP/023	01	00	08.03.2016

ओएनजीसी ONGC	Offshore Design Section Engineering Services (ISO – 9001:2008)	INSPECTION REQUIREMENT TABLE	IRT No. ODS/PPG/IRT/21
			Rev. No. 0
			Discipline PIPING
			Page 1

ITEM : CPCV Valves | **INSPECTION CATEGORY :C**

Activity	1. Inspection by ONGC / Certification Agency.(CA)	2. Inspection by ONGC / Third Party Inspection Agency (TPI)	3. Inspection EPC/EPC's Inspection by Contractor /TPIA	4. Inspection by Vendor/ Sub Vendor	5. Certificates / Data to be Submitted by Vendor for Review/ Approval	Stage of Inspection Involved
						General & Documents-For Review/Approval/Information
1	A	-	R	H	X	Inspection & Test Plan.
2	R	-	R	H	X	Material Identification Report
3	R		R	H	X	Material Test Certificates & Certificates of Approval from Authorities as per Specification 2004A Rev.8
4	R	-	R	H	X	Compliance with PS & Approved drawings.
5	R	-	R	H	X	Manufacturer's test certificates in compliance to ONGC Specification
						Inspection & Testing
6		-	W	H	X	Material Identification ,Inspection Marking and Tagging
7		-	R	H	X	Compliance to Purchase/ONGC Technical Specification
8		-	W	H	X	Final Visual and Dimension Check
9			Rw	H	X	NDE requirements and Records (RT/UT/MPI/DPT-as applicable)
10			RW	H	X	Hydrostatic Test
11			RW	H	X	Painting (As Applicable)
						IRN For Issue by CA/TPI/Contractor IA
14			R	H	X	Review of Documents and Check for Completeness against PS/PO.
15			Rw	H	X	Protective coating, Preservation, End Preparation, Handling and Storage.
16			IS	H	X	Issue of Release Note
						IMIR/GIIR at Yard/Offshore
17	R	R		H	X	Material Despatch Report Review& verification of IRN
18	W	W	-	H	X	Verification of item at yard & issue of IMIR/GIIR

LEGENDS & NOTES : Explained separately

FORMAT No.	Ref. PROCEDURE No.	ISSUE No.	REV. No.	REV. DATE:
ODS/SOF/004A	ODS/SOP/023	01	00	08.03.2016

ओएनजीसी ONGC	Offshore Design Section Engineering Services (ISO – 9001:2008)	INSPECTION REQUIREMENT TABLE	IRT No.	ODS/PPG/IRT/22
			Rev. No.	0
			Discipline	PIPING
			Page	1

ITEM : Pipes, Fittings, Flanges (Galvanised/Non-Galvanised/ Seamless/ Welded/Forged) CS/SS NACE & Non-NACE	INSPECTION CATEGORY :BULK

Activity	1. Inspection by ONGC / Certification Agency.(CA)	2. Inspection by ONGC / Third Party Inspection Agency (TPI)	3.Inspection by Contractor / Contractor's Inspection Agency (CIA)	4. Inspection by Vendor/ Sub Vendor	5. Certificates / Data to be Submitted by Vendor for Review/ Approval	Stage of Inspection Involved
						General & Documents-For Review/Approval/Information
1	A	-		H	X	Inspection and Test Plan
2	R	-		H	X	Submission of Manufacturing Procedures, Hydro test procedure, painting procedure etc.(As applicable)
3	R			H	X	Material Test Certificates
						Inspection & Testing By QA/TPI of Vendor
4		-		R/ W	X	Material Test Certificates & Verification of Traceability records and NDT records.(As applicable).
5		-		W	X	Hydro test
6		-		W	X	Final Visual and Dimensional & Stamping check
7		-		W	X	Surface preparation and Protective coating/Hot Dip Galvanizing as applicable (Visual and Final DFT check) as per ONGC spec 2005
						IRN For Issue by QA/TPI of Vendor
9				R	X	Review of Documents and Check for Completeness against PS/PO.
10				Rw	X	Protective coating, Preservation, End Preparation, Handling and Storage.
11				IS	X	Issue of Release Note
						IMIR/GIIR at Yard/Offshore
12	R	R		H	X	Material Despatch Report Review& verification of IRN
13	W	W	-	H	X	Verification of item at yard & issue of IMIR/GIIR

LEGENDS & NOTES : Explained separately

FORMAT No.	Ref. PROCEDURE No.	ISSUE No.	REV. No.	REV. DATE:
ODS/SOF/004A	ODS/SOP/023	01	00	08.03.2016

ओएनजीसी ONGC	Offshore Design Section Engineering Services (ISO – 9001:2008)	INSPECTION REQUIREMENT TABLE	IRT No.	ODS/PPG/IRT/23
			Rev. No.	0
			Discipline	PIPING
			Page	1

ITEM : CPVC Pipes, Fittings, Flanges | **INSPECTION CATEGORY:BULK**

Activity	1. Inspection by ONGC / Certification Agency.(CA)	2. Inspection by ONGC / Third Party Inspection Agency (TPI)	3.Inspection by Contractor / Contractor's Inspection Agency (CIA)	4. Inspection by Vendor/ Sub Vendor	5. Certificates / Data to be Submitted by Vendor for Review/ Approval	Stage of Inspection Involved
						General & Documents-For Review/Approval/Information
1	A	-		H	X	Inspection and Test Plan
2	R	-		H	X	Submission of Manufacturing Procedures , Hydro test procedure, painting procedure etc.(As applicable)
3	R			H	X	Material Test Certificates
						Inspection & Testing By QA/TPI of Vendor
4		-		R/ W	X	Material Test Certificates & Verification of Traceability records and NDT records.(As applicable).
5		-		W	X	Hydro test
6		-		W	X	Visual and Dimensional & Stamping check
7		-		Rw	X	Surface preparation and Protective coating/Hot Dip Galvanizing as applicable (Visual and Final DFTcheck) as per ONGC spec 2005
						IRN For Issue by QA/TPI of Vendor
8				R	X	Review of Documents and Check for Completeness against PS/PO.
9				Rw	X	Protective coating, Preservation, End Preparation, Handling and Storage.
10				IS	X	Issue of Release Note
						IMIR/GIIR at Yard/Offshore
11	R	R		H	X	Material Despatch Report Review& verification of IRN
12	W	W	-	H	X	Verification of item at yard & issue of IMIR/GIIR

LEGENDS & NOTES : Explained separately

FORMAT No.	Ref. PROCEDURE No.	ISSUE No.	REV. No.	REV. DATE:
ODS/SOF/004A	ODS/SOP/023	01	00	08.03.2016

ओएनजीसी ONGC	Offshore Design Section Engineering Services (ISO – 9001:2008)	INSPECTION REQUIREMENT TABLE	IRT No. ODS/PPG/IRT/24
			Rev. No. 0
			Discipline PIPING
			Page 1

ITEM : Cu-Ni Pipes, Fittings, Flanges | **INSPECTION CATEGORY :BULK**

Activity	1. Inspection by ONGC / Certification Agency.(CA)	2. Inspection by ONGC / Third Party Inspection Agency (TPI)	3.Inspection by Contractor / Contractor's Inspection Agency (CIA)	4. Inspection by Vendor/ Sub Vendor	5. Certificates/Data to be Submitted by Vendor for Review/Approval	Stage of Inspection Involved
						General & Documents-For Review/Approval/Information
1	A	-		H	X	Inspection and Test Plan
2	R	-		H	X	Submission of Manufacturing procedure , Hydro-test procedure, painting procedure etc.(As applicable)
3	R			H		Material Test Certificates
						Inspection & Testing by QA/TPI of Vendor
4		-		R/W	X	Material Test Certificates & Verification of Traceability records and NDT records.(As applicable).
5		-		W	X	Hydro test
6		-		W	X	Visual and Dimensional & Stamping check
7		-		Rw	X	Surface preparation and Protective coating/Hot Dip Galvanizing as applicable (Visual and Final DFT check) as per ONGC spec 2005
						IRN For Issue by QA/TPI of Vendor
8				R	X	Review of Documents and Check for Completeness against PS/PO.
9				Rw	X	Protective coating, Preservation, End Preparation, Handling and Storage.
10				IS	X	Issue of Release Note
						IMIR/GIIR at Yard/Offshore
11	R	R		H	X	Material Despatch Report Review& verification of IRN
12	W	W	-	H	X	Verification of item at yard & issue of IMIR/GIIR

LEGENDS & NOTES : Explained separately

FORMAT No.	Ref. PROCEDURE No.	ISSUE No.	REV. No.	REV. DATE:
ODS/SOF/004A	ODS/SOP/023	01	00	08.03.2016

ओएनजीसी ONGC	Offshore Design Section Engineering Services (ISO – 9001:2008)	INSPECTION REQUIREMENT TABLE	IRT No. ODS/PPG/IRT/25
			Rev. No. 0
			Discipline PIPING
			Page 1

ITEM : Titanium Pipes, Fittings, Flanges | **INSPECTION CATEGORY :BULK**

Activity	1. Inspection by ONGC / Certification Agency.(CA)	2. Inspection by ONGC / Third Party Inspection Agency (TPI)	3.Inspection by Contractor / Contractor's Inspection Agency (CIA)	4. Inspection by Vendor/ Sub Vendor	5. Certificates / Data to be Submitted by Vendor for Review/ Approval	Stage of Inspection Involved
						General & Documents-For Review/Approval/Information
1	A	-	R	H	X	Inspection and Test Plan
2	R	-	R	H	X	Submission of Manufacturing Procedures, Hydro test procedure, painting procedure etc.(As applicable), Material Test Certificates
						Inspection & Testing by QA/TPI of Vendor
3		-		R	X	Material Test Certificates & Verification of Traceability records and NDT records.(As applicable).as per ONGC FS2004A Rev 8
4		-		W	X	Hydro test
5		-		W	X	Visual and Dimensional & Stamping check
8		-		Rw	X	Surface preparation and Protective coating/Hot Dip Galvanizing as applicable (Visual and Final DFT check) as per ONGC spec 2005
						IRN For Issue by QA/TPI of Vendor
9				R	X	Review of Documents and Check for Completeness against PS/PO.
10				Rw	X	Protective coating, Preservation, End Preparation, Handling and Storage.
11				IS	X	Issue of Release Note
						IMIR/GIIR at Yard/Offshore
12	R	R		H	X	Material Despatch Report Review& verification of IRN
13	W	W	-	H	X	Verification of item at yard & issue of IMIR/GIIR

LEGENDS & NOTES : Explained separately

FORMAT No.	Ref. PROCEDURE No.	ISSUE No.	REV. No.	REV. DATE:
ODS/SOF/004A	ODS/SOP/023	01	00	08.03.2016

COMMISSIONING PROCEDURE

WHRU REPLACEMENT PROJECT

VOLUME – IIIB

OIL AND NATURAL GAS CORPORATION LIMITED
INDIA

INDEX

VOLUME III B

COMMISSIONING PROCEDURE

Sl. No.	FUNCTION SPECIFICATION NUMBER	FUNCTION SPECIFICATION NAME	Rev. No.
1	-	Hook Up And Pre-Commissioning	Rev-0
2	5103P	Pre-Commissioning and Commissioning Procedure & Performance tests (Process Platform)	Rev-2
3	5103W	Pre-Commissioning and Commissioning Procedure & Performance tests (Well Platform)	Rev-2

VOLUME – IIIB

HOOK UP & PRE-COMMISSIONING

WHRU REPLACEMENT PROJECT

OIL AND NATURAL GAS CORPORATION LIMITED
INDIA

TABLE OF CONTENTS

Sub- Section	Title
5.0	PRE-COMMISSIONING
5.1	GENERAL
5.2	DEFINITIONS
5.3	EXECUTION OF PRE-COMMISSIONING ACTIVITIES
5.4	READY FOR COMMISSIONING
5.5	VENDOR'S REPRESENTATIVE
5.6	DOCUMENTS TO BE SUBMITTED
5.7	SPARES, UTILITIES, ETC.
5.8	HANDING OVER OF MATERIALS APPENDIX -

APPENDIX - 5.1 PRE-COMMISSIONING CHECK LIST

5.0 PRE-COMMISSIONING

5.1 General

It shall be the responsibility of the Contractor to pre-commission and provide assistance during commissioning of the scope of work in the Bid Package defined elsewhere.

Contractor shall ensure all necessary pre-commissioning activities applicable for each component of the facilities to be carried out in accordance with the general guidelines provided in Appendix-5.1.

The pre-commissioning activity shall be considered to be completed only when it has been witnessed by Company or its authorized representative and the pre-commissioning formats have been signed by Contractor, Company, vendor's representative, (where ever applicable) and others as indicated on the approved format, as a token of successful completion of the said activity.

Contractor shall hand over the facilities to the Company after successful pre-commissioning activities. During all the pre-commissioning activities, the contractor shall involve Company's operating staff (nominated by the Company) and impart necessary techniques and know- how for operation and maintenance of the facilities.

5.2 DEFINITIONS

5.2.1 Mechanical completion

"Mechanical Completion" of a system means that all installation works of that system have been completed in accordance with 'approved for construction' drawings, specifications, applicable codes and good engineering practices; all tie-in connections have been made, all testing and inspection completed and the system/facilities are ready for pre-commissioning. "Mechanical completion of the platform" is defined as the status when the last system of the platform with its utility and auxiliary facilities, including interconnections and outgoing pipelines have reached the condition of 'ready for pre-commissioning'.

5.2.2 Pre-commissioning activities

"Pre-commissioning activities" are defined as the activities to be performed after erection/installation of the pipeline and risers to make them "Ready for Commissioning". This includes but is not limited to the activities like system checking, site modifications, flushing/cleaning of piping, checking of the safety system, operability test of equipment and system as a whole plus recommended checks on cp system and other Vendor packages. Further details are available in Appendix-5.1.

Vendor's recommendations have to be followed for all package items.

5.3 EXECUTION OF PRE-COMMISSIONING ACTIVITIES

It shall be the Contractor's responsibility to complete all the pre-commissioning activities, as per conditions stipulated under Appendix- 5.1. In case of any ambiguity, contractor shall formulate necessary procedure and obtain approval from Company/Engineer's Representative and shall carry out the work as per approved procedure.

It shall be Contractor's responsibility to complete maximum of the pre-commissioning activities at the fabrication yard to minimize the working time offshore. A guideline for carrying out pre-commissioning activities at yard/offshore is given below:
These are only indicative. Based on that, Contractor shall submit a detailed schedule and procedure for carrying out these activities, which shall be approved by the Company.

5.3.1 List of minimum pre-commissioning activities to be carried out before bringing materials at offshore

i) Testing of PSVs
ii) List of pre-commissioning activities related to Instrumentation.
- Off line testing and calibration of instruments as reflected in P&IDs.

5.3.2 List of minimum activities to be carried out at offshore after installation and hook-up

(i) Calibration check of instruments and loop checking. All the systems/equipment including vendor's packages and Company supplied equipments, if any shall be included.
(ii) Repeat testing of PSVs
(iii) System flushing
(iv) System leak test
(v) System drying (where applicable)
(vi) Calibration and functional check of fire and HC Gas Detectors and on line testing of Fire and Gas detection system.
(vii) Functional check of well/fire SDP and Gas Detection Panel.
(viii) Checking of electrical equipment for proper earthing, continuity, insulation resistance and secondary injection of relays after insulation resistance test.
(ix) Purging of hydrocarbon system with nitrogen to bring down the oxygen content to less than 2%, by volume.
(x) Checking of all life saving equipment.
(xi) Operability test of fire fighting system after interconnection of the fix water header with water injection network.

(xii) Pipeline be filled-up with chemically treated water to prevent bacteria formation and corrosion.

(xiii) Any other work as called for by design criteria and punch list.

5.3.3 Pre-commissioning of Modification Works

Contractor shall carry out modification works, inter-connection and hookup operations as indicated in Sec.5.1, keeping in view that shutdown period of all the existing facilities should be minimum. Contractor shall arrange to get details of all existing facilities for this purpose.

It shall be the Contractor's responsibility to carry out all necessary preparatory work like draining, venting, gas freeing, purging etc., for all the existing facilities required for modification and safe tie-in. It shall be the Contractor's responsibility to arrange and provide steam, chemicals, nitrogen etc. required for gas freeing operations. It shall be Contractor's responsibility to ensure proper safety during tie-in/modification operation. It shall also be the responsibility of the Contractor to carry out the required pre-commissioning activities, as indicated in Sec. 5.3.2, for the existing systems at various platforms described elsewhere in the bid which are either modified or hooked up with the new facilities.

5.4 READY FOR COMMISSIONING

After completion of pre-commissioning activities, Contractor shall notify to the Company that the systems are ready for commissioning.
"Ready for Commissioning" status shall be then jointly reviewed by the Company / Engineer / Contractor.
Pipelines facilities shall be considered to be pre-commissioned successfully when all the systems as mentioned above including the required utilities and support system have reached a stage where it can be operated with all its controls and safety devices in line to meet the requirement as per design specifications.
Once the facilities are successfully pre-commissioned, it shall be handed over to the Company for commissioning along with tools, kits, commissioning spares and list of operating spares etc. supplied as part of equipment by the Vendor/Contractor as part of Contract. The list of such items shall be prepared by the Contractor and handed over to the Company.

5.5 VENDOR'S REPRESENTATIVE

The Contractor shall arrange to have manufacturer's representative(s) present during mechanical completion / pre-commissioning of the following major equipment / systems at fabrication yard and offshore.

This service shall be included in the lump sum costs quoted by the Contractor.

i) Shutdown Panel

ii) Fire and Gas Detection System including Fire and Gas Panel
iii) Fire and Gas Panel etc. where modifications are envisaged.
iv) Telemetry interface cabinet.

The Contractor shall submit in their offer at Bid stage to the Company the schedule and minimum duration for calling Vendor's representative at yard/offshore.
The Contractor shall reconfirm the schedule and duration (of Vendor Representative) three weeks prior to pre-commissioning which shall be strictly complied.

It is Contractor's responsibility to retain Vendor's representative at site if job is not completed within the period indicated in the offer.

Contractor shall inform the Company about completion of job and shall take approval from the Company before sending Vendor's representative back from yard/offshore.

5.6 DOCUMENTS TO BE SUBMITTED

5.6.1 Operating Manual

The Contractor shall prepare a draft start up and operating manual for all of the facilities and submit to Company representative at least 90 days prior to start of pre-commissioning activities. In particular the following information shall be covered in this manual.

i) Design basis
ii) Description of facilities
iii) Pre-commissioning checks
iv) Vendor instructions for all equipment for normal operation and trouble shooting.
v) Operating parameters and set points of different alarms and trip devices
vi) Fire and Gas detection systems operation, maintenance and calibration procedures.

The manual shall have the following attachments as minimum.

i) Reduced size copies (275 mm x 425 mm) of line lists.
ii) Equipment and instrument data sheets as per purchase order
iii) Electrical Single line diagrams
iv) PFD & Piping and Instrumentation Drawing (P&IDs)
v) Safety Logic Diagrams, all shutdown schemes and Safe Charts.
vii) Equipment layout
viii) Safety Escape Routes
ix) Field Location Map
x) Layout and Location Maps for Fire and Safety Equipments.
xi) Recommended proforma for routine parameters during normal operation for C.P. System etc.

The Contractor shall submit the draft operating manual to the Company for review. Review of start-up and operating manual shall be done by the Company/Engineer's Representative within 45 days after receipt of draft. The Contractor shall discuss the comments with Company/Engineer's Representatives and incorporate the mutually agreed comments in the final document. The Contractor shall submit the final document for approval to the Company. After the document is approved by the Company/Engineer's Representative, Contractor shall make the required number of copies, specified elsewhere and submit to the Company/Engineer's Representatives. This manual shall be furnished to the owner at least 30 days prior to the commissioning and followed during start up and commissioning of the facilities. Vendor operating maintenance manuals shall be submitted along with the final operating manual.

The operation manual can be divided into two or three parts if the thickness of manual is exceeding 3 inches. While describing, pre-startup checks, start-up procedures, shutdown procedure and normal operation for an equipment, vendor's recommended procedure and integration of that equipment with other facilities must be considered.

5.6.2 Pre-Commissioning Procedure

At least 120 days in advance of start of pre-commissioning activities, Contractor shall prepare detailed format of check lists of pre- commissioning and commissioning activities for each equipment/system.
The Contractor shall submit the said format for approval of the Company.

All the check list points shall be dealt by the Contractor. System readiness for commissioning shall be determined based on completion of relevant portion of check list as per the approved format prepared by the Contractor. The Contractor shall submit a detailed schedule for carrying out the pre-commissioning activities in a network form.

For the purpose of execution of these pre-commissioning activities, the entire unit shall be divided into systems and sub systems. The pre commissioning document shall contain the following:

i) System/sub-system identification
ii) Detailed procedure for the various pre-commissioning activities such as system check, flushing, leak test, etc. with formats to record the observations of the activities carried out.
iii) List of commissioning spares.
vi) List of spares and vendor recommended spares for vendor's package items.
vii) List of pre-commissioning activities to be carried out at yard, at offshore, or at both places.

The Contractor shall submit the draft pre-commissioning document 120 days before the activities are to be carried out. The document shall be reviewed by the Company/Engineer's representative. The contractor shall submit a revised document after incorporating Company's comment for approval to the Company/Engineer's Representative. The approved document shall be submitted 60 days prior to starting of the pre commissioning activities.

5.6.3 Modification/Hook-up Procedure

Contractor shall submit along with pre-commissioning document, detailed procedure for carrying out modification works, interconnection and hookup operations as indicated in Sec. 5.1. While detailing the hook-up procedure, Contractor shall keep in view that shut-down period of all the existing facilities should be minimum.

The procedure should also contain the pre-commissioning activities, as indicated in Sec. 5.3.2, for the existing systems which are either modified or hooked-up with the new facilities.

5.7 SPARES, UTILITIES, ETC.

The Contractor shall be responsible for supply of all the spares and consumables till the platform including any modifications are mechanically completed, pre-commissioned/commissioned and handed over to the Company.

All utilities required during pre-commissioning/commissioning of the facilities, including power, air, water, crane, etc. shall be provided by the Contractor. In no case the facilities provided on the platform shall be used for this purpose unless authorized by the Company.

It shall be Contractor's responsibility to repair any damage to the system occurred during load out, transportation and installation and pre-commissioning of the facilities. The Contractor shall maintain a record of the start-up spares consumed during pre-commissioning and handover the balance items to the Company.

5.8 HANDING OVER OF MATERIALS

After the mechanical completion and completion of the pre commissioning activities for all the systems installed on the platform by the Contractor, the Contractor shall handover to the Company all the materials which shall include but not limited to the following:

- Special tools and tackles
- Commissioning spares

APPENDIX - 5.1

PRE-COMMISSIONING

The checklist represents the minimum of work which has to be performed but not limited to, by the Contractor prior to commissioning of the facilities. However it is not intended to be a complete list of activities required to be carried out by the Contractor.

Manufacturer's instructions for pre-commissioning checks, testing must also be followed for all equipment.

1.0 GENERAL PROCEDURES FOR PRE-COMMISSIONING

The general work procedures listed below outline the work to be performed by the Contractor. Procedures applicable to specific system or items of equipment are covered separately.

1.1 Packing Seals for Valves, pig barrel doors

a) Install mechanical seals, permanent packing and accessories wherever required.
b) Adjust and replace mechanical seals, packing and accessories, as necessary, during pre-commissioning/commissioning period.

1.2 Removal of Temporary Bracing

Remove all temporary supports, bracing, or other foreign objects that were installed in vessels, piping, or other equipment to prevent damage during transportation, storage and erection.

1.3 Tie-ins at Unit Battery Limit

Prepare all systems for safe tie-ins with utilities and auxiliary systems. Contractor shall prepare the existing operating systems for tie-ins in consultation with company and will be responsible for safety during tieins. Contractor shall take approval of the Company for the safety measures to be taken by him before any tie-in work is taken-up.

1.4 Systems Check/Inspection

a) Provide inspection facilities to Company/Engineer's Representative to check that erected facilities conform to the process and instrumentation drawings, construction drawings, vendor drawings and specifications approved for construction.

b) Verify and approve the facility check. Note exceptions, if any on a separate work order list before taking decision on continuation of pre commissioning process.

1.5 Site Modifications

Carry out site modifications as found necessary during system check/inspection from view point of routine operations, maintenance and safety of the plant. A list of such jobs shall be prepared by the Company/Engineer's Representative and shall be handed over to the Contractor for execution.

1.6 Flushing and Drying

Perform flushing and blowing of all piping to remove dirt, welding slg, etc. after hydro testing. Arrange for cleaning media for carrying out flushing/blowing and disposal of the cleaning media in accordance with procedures to be adopted by the Contractor and approved by Company.

Following flow rates of cleaning media are to be maintained for flushing/blowing of piping:

Air - 8-9 ft/sec.

Water - 3-4 ft/sec.

Carry out drying operation of all piping and equipment after flushing/blowing is over as per the approved procedure.

1.7 Temporary Spools, Strainers and Blinds

Provide and install all temporary strainers (20-40/in mesh) wherever required. Install permanent strainers after initial operation.

Clean strainers as required during pre-commissioning and commissioning.

Provide, install and remove all blinds required for flushing operation.

Install and dismantle temporary pipe spools as and when required for pre commissioning and commissioning.

Change gaskets, if necessary.

1.8 Leak Tests

a) Make non-operating leak tests on piping and field fabricated equipment. Conduct all tests in accordance with applicable codes and specifications.

b) Detailed procedure for leak tests on piping and field fabricated equipment shall be submitted to Company for approval.

c) After completion of all pre-commissioning activities leak tests of complete process facilities including piping, equipment, instrument connections etc., with air or any

other test media at a pressure of 6-7 kg/cm2g is to be carried out as per Company's approved procedures. However in no case the leak test pressure shall exceed the system design pressure. If any special media for test purposes is used, provide facilities for its disposal.

d) Notify Company of test schedule at least two days in advance. All the tests are to be witnessed and test record on satisfactory completion of the test be signed by Company/Engineers Representative.

e) Provide four copies of all the test records to the Company.

f) Conduct all operational tightness test.

1.9 Safety Devices

a) Provide the Company with a list of proper settings for safety devices.

b) Install all safety devices (including pressure relief valves) on the equipment after calibration.

c) Test and adjust all safety devices such as PSVs, at Offshore.

1.10 Purging

Install necessary purge connections and carry out system purging with inert gas including that of flare and vent as per Company's approved procedure. The final oxygen content in purged system shall be brought down to less than 2% (v/v). Contractor shall arrange and supply the nitrogen required for purging.

1.11 House Keeping

Provide continuous clean-up the construction and operational area. Remove excess materials, temporary facilities and scaffolding and pickup thrash. Perform washing for further clean-up as required.

1.12 Equipment Protection and Spare Parts

a) Protect equipment from normal weather conditions, corrosion or damage before commissioning.

b) Provide all installations and commissioning spares.

c) Mark escape routes on the platform. Install duly framed escape route drawings at all strategic locations.

1.13 Miscellaneous

To carryout any other check/test as required by Company/Engineer's Representative and provide all test certificates of the items supplied by the contractor as required by the Company/Engineer's Representative.

1.14 Operability Test for a System/Equipment

a) The Contractor shall provide his proposal/procedures for carrying out the operability test of each equipment/system to prove that the equipment/system installed meet the design specifications.

b) This shall also include the supply of log sheets wherein the operating parameters shall be recorded hourly.

c) The operability test shall be carried out by the Contractor and the Vendor's Representative wherever applicable.

d) The Contractor shall make necessary checks, adjustments, repairs required for normal operation of the system/equipment. The safety devices shall be tried for their proper operation.

e) Upon completion of the operability test, the log sheet with all observations shall be signed by the Contractor/Vendor's Representative. The performance should be evaluated based on the data and observations made during the operability test. In case of any dispute, the decision of Company/Engineer's Representative shall be final.

2.0 SPECIFIC PROCEDURES

In addition to the work to be performed in accordance with the above, the detailed procedures outlined below further define the work responsibilities of the Contractor for specific systems and items of equipment.

2.1 Piping Systems

a) Notify the Company of hydrotest schedule at least two days in advance.

b) Orifice plates, control valves and any other on-line instruments should not be installed before testing and flushing. If installed, they shall be removed and necessary spool pieces shall be provided in their place wherever required.

c) Piping system shall be thoroughly flushed and cleaned to the satisfaction of the Company/Engineer's Representative.

d) Hydrostatically or pneumatically test all piping as required by the drawing or specifications.

e) After testing drain and dispose of the test media as per the Company's instructions. All the piping will be dried using air and boxed up. Air for drying purpose shall be arranged by Contractor.

NB: Air used for drying shall be free from oil, in other words non-lubricated air compressors shall be used.

f) Check pipe hangers, supports, guides and pipe specialities for the removal of all transportation and erection stops and for the correctness of cold settings for the design services.

g) Check pipe supports, hangers, guides and pipe specialities for hot settings and make minor adjustments as necessary.

h) Install seals on valves where necessary. Replace dried up graphite seals with fresh ones.

i) Correct support, vibration and thermal expansion problems detected during commissioning.

j) Ensure appropriate permanent gaskets are installed.

2.2 Electrical Power and Lighting Systems

a) Notify Company of the test schedule.

b) Using a megometer make insulation tests on all wiring.

c) Insulation tests are to be carried out on all HT/LT cables, HT/LT panels and lighting boards etc.
d) Make grounding system tests to determine the continuity of ground connections and the value of resistance to ground.
e) Check that all electrical equipments are certified for the environment in which they are located.
f) Continuity check of anodes for C.P.System

2.3 Instrument Systems

a) The Contractor will make all non-operating checks that will ensure instrument operability, i.e., remove all transportation stops, check pointer travels and verify instrument capability to measure, operate and stroke in the direction and manner required by process application.
b) Clean all transmission and control tubing by blowing with cooled and filtered clean air before connecting to instrument components.
c) Clean all transmission air supply headers by blowing with cooled and filtered clean air and check them for tightness.
d) Leak test pneumatic control circuits in accordance with ISA recommended practice RP 7.1, Pneumatic Control Circuit Pressure Test, 1956.
e) Check impulse piping from instruments to process piping for tightness.
f) Install and connect all system components and verify their conformance to specifications and design criteria for functioning and range using dummy transmission signals as needs.
g) Check thermocouple for proper joining of wires, position of elements in wells, proper polarity and continuity of receiving instruments.
h) Identify orifice plates by tagging and check for proper installation of upstream side of plate.
i) Isolate or remove if necessary on line components such as control valves, positive displacement meters and turbine meters for pressure testing. Reinstall these items after testing the system.
j) Check bores and flow direction of orifice plates and install these plates after completion of flushing operations.
k) As indicated by the Company's specifications, calibrate instruments with standard test equipment and make all required adjustments and control points settings.
l) Fully pressurize and energize the transmitting and control signal system(s) by opening process connections at primary sensors and final regulators and by making control mode settings for automatic operation of equipment as the process unit is charged and brought on-stream.
m) Check settings of all alarm and shutdown switches.
n) Check all shutdown systems before commissioning.
o) The Contractor shall arrange for testing and re-calibration of all safety valves settings at offshore. Ensure that isolation valves of safety valves are locked open/close as per drawing.

p) Check all electrical signals and alarm wiring for continuity, correct source of power and polarity.
q) Hydro testing of impulse tubing and other associated tubing.
r) On line testing & calibration checks of all instruments and loop checking of all such instruments.
s) Installation and hook-up of Gas detector fusible plug, ESD / FSD stations etc.
t) ESD / FSD loop testing.
u) Functional test and associated loop testing incoming and outgoing (to and fro) from well / fire shutdown panel.
v) Functional test and associated loop testing related to Fire and Gas Detection system.
w) Functional test and associated loop testing related to telemetry interface cabinet.
x) Any other instrument related activity not listed above but mentioned elsewhere in bid package.

2.4 Shutdown System

The ESD and FSD systems shall be provided for new pipelines. These will be checked by manual pull switches and by removal of fusible plug from fusible plug loop, if such a loop is provided on the launcher/ receiver.

2.5 Control Panel Alarm System

The shutdown panel shall be checked for all process, fire, gas and ESD/FSD signals. The panel shall be checked for visual as well as audible alarms.

Section 6.0

Pre-Commissioning, Commissioning Procedure & Performance Tests (Process Platform)

PN	AKG	SVB	39	26.06.2021	2
MSA	BS	RKS	34	31.03.2017	1
-	-	-	41	-	0
Prepared / Revised By	**Reviewed By**	**Approved By**	**No. of Pages**	**Date**	**Rev. No.**

CONTENT

1. Introduction
2. Definitions
   2.1. Mechanical completion
   2.2. Ready for Pre-commissioning/ Pre-commissioning activities
   2.3. Pre-commissioning activities
   2.4. Ready for commissioning
   2.5. Design Capacities
3. Execution of Pre-commissioning Activities
   3.1. Factory Acceptance Test Requirements (FAT)
   3.2. Minimum pre-commissioning activities to be carried out at yard
   3.3. Minimum operation checks for Distributed Control System (DCS) at vendor works.
   3.4. Minimum activities to be carried out at offshore after installation and hook – up
   3.5. Site Acceptance test (SAT)
   3.6. Preservation of systems
4. Commissioning
   4.1. Shut down Requirements
   4.2. Purging and Cleaning Requirements
5. HSE / RISK MANAGEMENT
   5.1. Personnel Awareness
   5.2. Personnel Capability
   5.3. Accident Prevention
   5.4. ONGC Supervisor's Responsibility
   5.5. Management Involvement and Visibility
   5.6. Pre start-up assessment
6. Modification works
   6.1. Pre-commissioning of modification works
7. Performance tests for works
   7.1. Maximum Rate performance Test of Platform
   7.2. Minimum Rate Performance Test of Platform
   7.3. Performance Test of the Modifications
8. General
   8.1. Vendor's representatives
   8.2. Spares, Utilities etc.
   8.3. Handing over of Materials
   8.4. Special requirements
9. Documents to be submitted

9.1. Operating manual
9.2. Pre-commissioning documents:
9.3. Modification/hook up procedure
9.4. Commissioning procedure
9.5. Other requirements
9.6. Yard check out before Load out
9.7. Modification and Hook-up
9.8. Manpower for Commissioning

Attachment A

1. Commissioning Checklist
   1.1. General Procedure
   1.2. Packing and seals
   1.3. Removal of temporary supports
   1.4. Alignment of rotating Equipment
   1.5. Tie-ins at unit limits
   1.6. System check/ inspection
   1.7. Site modifications
   1.8. Flushing
   1.9. Temporary screens, Strainers and Blinds
      1.9.1. Leak Test
      1.9.2. Vacuum Test
   1.10. Safety Devices
   1.11. Purging
   1.12. Drying out
   1.13. Lubricants and chemicals
   1.14. House keeping
   1.15. Equipment protection and spare parts
   1.16. Chemical Cleaning
   1.17. Firefighting & lifesaving equipment
   1.18. Miscellaneous
   1.19. Operability test for a system/equipment

2. SPECIFIC PROCEDURE
   2.1. Vessels
   2.2. Shell and tube exchanger
   2.3. Air-cooled exchanger

2.4. Pumps, compressors and drivers
2.5. Piping system
2.6. Electrical power and lighting system
2.7. Instrument system
2.8. Portable water system
2.9. Water system (fire water system and sea water systems)
2.10. Sewage treatment and disposal
2.11. Building and Accessories
2.12. Cranes and hoists
2.13. Fire and Gas detection & Fire Fighting system
2.14. Shutdown system
2.15. Control Panels
2.16. Generals

1. INTRODUCTION

Contractor shall pre-commission, commission and carry out the Performance Tests on the Works including all the facilities of the Platform and associated Modifications of the facilities as listed in Description of work in the bid package. Prior to performing said activities Contractor shall submit a procedure for the same well in advance as per guidelines stated herein for Company's review and approval.

This procedure defines the following stages of the Works:

- Mechanical Completion
- Pre Commissioning activities
- Commissioning activities
- Performance Tests

For other requirements of testing refer Basic Bid Work, respective Design Criteria and respective Functional Specification given elsewhere in Bid Package.

A Pre-commissioning activity shall be considered to be complete only when it has been witnessed and the procedure and the results of successfully carrying out that procedure have been signed off by both Contractor and Company. Company may also require Vendor's representative to witness and sign that document.

During the pre-commissioning & commissioning activities, the Contractor shall involve Company's operating staff (nominated by the Company) and impart necessary techniques and know-how required for operation and maintenance of the facilities.

2. DEFINITIONS

2.1. Mechanical Completion

Mechanical Completion of the process Platform and modification work is defined as the state when all systems including utility and auxiliary facilities have been installed in accordance with the drawing and specifications and ready for pre-commissioning in safe manner and in compliance with project requirements and accordingly certified by Company or Company authorized representative.

Mechanical completion of a system includes following but not limited to:

- All design and engineering has been completed
- All installation work for that system including all equipment, piping, cables, etc., has been completed in accordance with "Approved for Construction" drawings, specifications, applicable codes and regulations and good engineering practices.
- All instruments have been installed as per installation Standards.
- All tie-in connections have been made.
- All factory acceptance tests and all other testing and inspection activities have been completed
- Contractor has obtained necessary approvals, which are the responsibility of the Contractor to obtain.
- Safety Studies have been completed and recommendation/observation of the Safety Studies reports has been met and all documentation put in place.
- All required documentation and certification documents required by the Contract have been supplied.
- All operating procedures and maintenance procedures have been forwarded to the Company well in advance for review.
- All items for which Contractor is responsible for obtaining third party, regulatory or Company approval have been obtained and confirmation documentation has been provided to Company.
- All software systems have been loaded and proved.
- Most construction-related equipment has been removed from the Platform, leaving only that necessary to pre-commission and commission the Works.

2.2. Ready for Pre-Commissioning

The works is Ready for pre-commissioning when the Company/company's authorized representative has issued a certificate for Mechanical Completion and notification in writing that the Works is Ready for Pre – commissioning.

2.3. Pre – commissioning Activities

Pre-commissioning activities are activities to be performed after Mechanical Completion of a piece of equipment, sub-system or system to make it safe and ready to receive hydrocarbons and Ready for Commissioning. This includes:

- Performance of all remaining works other than commissioning and Performance Tests.
- Making operational and commissioning all systems that can be made operational before well fluids are introduced.
- The completion and testing of connections between different Platforms and the platform equipment & systems

- Testing of all parts and systems of the Works including the communications systems (if requires).
- Provision of initial fill of packing, chemicals, inhibitors, lubricants, glycol, water and other stocks has been made.
- Checking site modifications.
- Internal inspection of the vessels
- Flushing/cleaning of vessels, piping, pipelines etc.
- Calibration of Pressure safety valves (PSVs) and Temperature safety valves (TSVs) etc.
- Calibration of all the instruments with documentation of results.
- Loop checking.
- Complete checking of the safety system
- Checks on electrical system and other vendor packages including Distributed control system (DCS) etc.
- The delivery, storage and cataloguing of all spares
- Items for which a Defect Notice are issued to be rectified and all Defect Notices shall have been closed out.
- The Completion Documents along with all Design Documents to As-Built
- The preparation of the commissioning plan and submission to Company for review.
- The hydro testing and pneumatic testing of vessels, piping, pipeline etc.
- Training and briefing of the Company's and Contractor's personnel involved in commissioning
- Removal of all debris and construction equipment from Site.

Further details are given in Attachment A.

2.4. Ready for Commissioning

Ready for Commissioning means the point at which the Company issues a certificate to the Contractor to say that the system is ready for commissioning. Ready for commissioning status shall be jointly reviewed by the company/ contractor.

At this point all systems and equipment shall be at a stage where process fluids can be safely introduced and all equipment can be safely operated with all controls and safety devices in service to meet the requirement as per design specification.

2.5. Design Capacities

The Maximum Design Capacity and Minimum Design Capacity are defined elsewhere in bid package

3. Execution of Pre-Commissioning Activities

Contractor shall complete all the pre-commissioning activities in accordance with conditions stipulated under Attachment A and as per instructions from vendor's of individual equipment. Contractor shall write necessary procedures and obtain approval from Company prior to commencing work and shall carry out the work in accordance with approved procedures.

The Contractor shall complete as many of the pre-commissioning activities as possible at the fabrication yard to minimize the working time in offshore. A guideline for carrying out the pre-commissioning activities at yard/offshore is given below. These are minimum requirements only.

Contractor shall repeat these yard tests at offshore in so far as is necessary to demonstrate that the equipment has not been damaged during transit from yard to offshore site and during erection/installation at offshore and that it is in the same condition as it was when first tested.

The Contractor shall submit a detailed schedule and procedure for carrying out these activities for approval by the Company before starting work.

3.1. Factory Acceptance Test Requirements (FAT)

As a minimum Factory Acceptance Test shall be required on the following packages:

- HIPPS System
- HPU System
- DCP skid with hose reel
- Navigational -Aid system along with battery ⚠
- F& G Detector ⚠
- Hypo chlorinator ⚠
- Fire & Gas system
- Multi-phase flow meters
- Multi-port flow selection valves (MPV)
- Pumps
- Compressors
- Turbine
- Well Fluid Heater, air coolers, any other exchangers
- Generator
- Water Maker
- Nitrogen Generator Package
- Pressure Vessel
- Inline separators ⚠
- Hydro-cyclone ⚠
- PSV & TSV
- Communications system.

- Distributed Control System (DCS)
- Fire/Emergency Shutdown System (FSD/ESD)
- Deck Crane (pedestal), All Pumps ⚠
- Chemical Dosing/ Injection Pumps
- Oil/ Gas Metering system
- Analyzers ⚠
- Instrument & Utility gas system
- Sacrificial anode, Solar Electric power system, submarine cable, ⚠
- Solar Panel and solar power controller ⚠
- Sub-sea umbilical ⚠
- PLC-based safety and control systems ⚠
- Control valves & Shutdown valves ⚠
- Transmitters & gauges ⚠

25

The above list shall be considered as a minimum and shall be supplemented with other items based upon requirement indicated in respective functional specifications. The Contractor shall define factory Acceptance Testing Requirements as a part of all Purchase Requisitions. This requirement shall be submitted to the Company for approval prior to the award of a purchase order.

The packages shall be tested with the ancillary equipment that is to be supplied with them. Factory acceptance testing of instrumentation related equipment shall be as per functional specifications of the respective instrument items.

A Factory Acceptance Testing shall be conducted prior to dispatch from the Vendors works to determine that the assembled equipment meets the design requirements.

The Contractor shall submit a full Factory Acceptance Test procedure 6 weeks prior to the Factory Acceptance Test to detail the full extent of testing of the equipment. The testing procedure shall be approved by the Company prior to the commencement of testing and shall be complete with all equipment procedures, checklists and safety requirements to be taken. The Contractor shall be responsible for providing all necessary equipment and utility services to conduct the tests. The Contractor shall ensure that an opportunity is given to all relevant parties to attend all hold and witness points during Factory Acceptance Testing

3.2. Minimum Pre-Commissioning Activities to be carried out at yard

Factory acceptance test as brought out above shall be completed prior to pre commissioning activities at yard can be commenced. At least the following pre-commissioning activities shall be carried out at the fabrication yard.

- Check systems conforming to the requirements of the P&IDs, drawings and datasheets
- Leak Testing
- Internal Inspection of Vessel
- Inspection of strainers/filters, orifice plates and other piping specialties.
- Operability test of utility systems (except those which cannot be operated at the yard). Equipment shall be operated for a minimum of 4 hrs.
- System Flushing and Cleaning
- Operability test of pump and rotating equipment.
- Testing of PSV and TSV
- Complete unit test (Full load string test) of Turbine generator (TG) and Process gas compressor (PGC)

Pre-commissioning activities related to instrumentation at yard shall be as follows: ⚠

1. Off line testing and calibration of instruments as reflected in P&IDs, safe charts and other project documents.
2. Installation and hook-up as per installation & hook-up drawing.
3. Hydro testing of impulse tubing and other associated tubing. Leak test of instrument isolation valves / manifolds.
4. On line testing and calibration checks of all instruments and loop checking of all such instruments.
5. Installation and hook-up of gas detector fusible plug, ESD/FSD stations etc.
6. ESD/FSD loop testing.
7. Functional test of gas detection system inclusive of all related field devices, controls signals.
8. Any other instrument related activity not listed above but mentioned in the relevant functional specifications elsewhere in the bid package.
9. Additional test requirements are detailed in FAT Procedure.
10. All above tests are to be performed on the assembled systems to check their integrity, completeness and correctness before dispatch from vendor's works
11. All the tests will be witnessed by the Company.

3.3. Minimum operation checks for Distributed Control System (DCS) at vendor works.

Once the system is made ready at Vendor's works the Contractor shall carry out Operation and functional checks necessary to confirm that the system meets the Contract requirements of hardware, software & integration including the following:

- Debugging and graphics to ensure the correct display.
- Debugging alarms with respect to correct color codes, descriptions, priority and correct tag numbers.
- Checking and correction of the various control loops for conformance with the Platform systems safety philosophy.
- Functional test for the special assigned soft keys with respects to correct display.
- Debugging of guided messages display.
- Checking of all I/O through to field terminals
- Trip point simulation ⚠
- Logic function simulation ⚠
- Alarm generation and resetting ⚠
- Operator functions testing like normal functions, bypass operation, manual shutdown etc. ⚠
- System and process alarm diagnostic functions ⚠

Additional test requirements are detailed in FAT Procedure.
All above tests are to be performed on the assembled systems to check their integrity, completeness and correctness before dispatch from vendor's works.
All the tests will be witnessed by the Company.

3.4. Minimum Activities to be carried out at Offshore after Installation and Hook – up

The Contractor shall carry out the following activities after installation and Hook Up.

- Calibration checks of instruments and loop checking. All the system/equipment including Vendor's packages and Company supplied equipment (if any) shall be included.
- Charging of filter media, packing, lubes, chemicals, etc.
- Repeat testing of PSVs and TSVs.
- System flushing
- System drying (Where applicable).
- System leak test. Water lines are also included.
- Inert gas purging (wherever applicable) for hydrocarbon system. ⚠
- The acceptance criteria for purging will be safe tie-in site condition accepted by both company and contractor. ⚠
- Complete functional checks of DCS, Emergency Shut down and Fire and Gas Programmable Logic Controllers. All such tests to be carried out at offshore

after installation and shall be followed as per functional specification of DCS and respective control system given in S.A.T

- Pre-Commissioning checks for UPS, Switch gear, MCC etc.
- Testing and checking of electrical equipment for proper earthing, continuity, insulation resistance and relay testing as per OEM recommendation, illumination level checking. ⚠
- Testing and checking of all lifesaving equipment and operability test (including load test) for survival craft (load testing of survival craft davit either at yard or offshore).
- Operability test of all utilities and fire water pumps for 8 hours.
- Repeat operability test of IA/UA air compressors & dryers, emergency (starting) Air compressor, utility/potable water pumps, chlorinators etc. for 8 hours.
- Calibration of gas/fire/smoke and H2S detectors. Testing and calibration of F&G System including various type of detector shall be followed as per Functional Specification of F&G System given elsewhere in Bid Package & SAFE Charts.
- Functional test and check of Central Control Panel, local Shutdown Panels and startup & shut down logics for injection pumps and booster compressors as per respective
- Functional Specification given elsewhere in Bid Package.
- Operability test of TG sets (8 hours each unit).
- Operability test for utility water lift pumps, injection pumps, chemical dosing pumps and operability test of deck cranes. (Load test of deck cranes will be required if the deck crane is installed at offshore or if it cannot be tested adequately at onshore).
- Operability and load test of material handling system.
- Operability test of firefighting equipment including hose reels, clean agent system and sprinklers system etc.
- Operability test of HVAC, radio, paging, intercom, CCTV, telephone system, EPABX and all living quarters equipment ⚠
- Run test of gas turbines, process gas compressor, booster compressors and generators for 24 hours at no load. All control logic, start-up & shutdown features shall be tried.
- Run test of Fuel Gas Compressors for minimum 4 hours at rated condition in conjunction with FG conditioning skid to demonstrate fulfillment of their purpose as per Process Design Criteria. All control logic, start-up & shut down features shall be tested.

- Installation & calibration of all laboratory equipment/instruments and put them on operation. Detail requirement to be firmed up in detailed design phase.
- Installation and placing in service of the machines provided in workshop.
- Checking of electrical power system, CP monitoring system, Battery capacity, etc. ⚠
- Functional test of ESD and Fire and Gas systems and associated start-up and maintenance by-passes
- Operability Test for Flare System ⚠
- Operability Test for Clean agent system

3.5 Site Acceptance Test (SAT) ⚠

As a minimum Site Acceptance test shall be required on the following packages which has to be inspected by ONGC/ Certification Agency.

- HIPPS
- DCS
- F&G Detection system
- Subsea umbilical
- Well head shutdown panel & standalone shutdown panel
- SSIV Actuator & HPU
- PLC
- Produce water Conditioning
- Fuel gas system
- Deck crane (pedestal)
- Instrument & utility gas system
- HVAC System

The above list shall be considered as a minimum and shall be supplemented with other items based upon requirement indicated in respective functional specifications.

3.6. Preservation of systems:

After completion of pre-commissioning and before handover of platforms, Contractor shall ensure the preservation of Equipment, systems, facilities etc., for 6 (six) months so as to the platform shall be ready for Commissioning / Start of Production Piping shall be preserved by filling Nitrogen or Water as required. Preservation of equipment etc. shall be done as recommended by respective vendors.

4. COMMISSIONING

Commissioning of the Platform and the Modifications involves the programmed introduction of hydrocarbons and the operation of all systems in the manner intended.

At least three months in advance of the planned date for the issue of Ready for Commissioning, Contractor shall submit for approval a procedure to the Company giving complete details of the programme and procedures to be followed for commissioning. The procedure shall describe all activities and methods for executing these activities safely. It shall provide details of the rates, ramp up rates, configurations of equipment, throughput, train combination, operation of standby equipment and all other matters required to introduce hydrocarbons to the Works, ramp up flows, test and prove the Works on hydrocarbons and do all other things required by Company to commission the Works.

After Company has given approval to commission the Works, well fluids will be introduced to into the Works. The flow of well fluids will be modulated as Company judges appropriate. At a time to be determined by the Company, the Company will determine that the Works is ready for Performance Tests and these tests will be conducted in accordance with the requirements of the Company.

4.1. Shut down Requirements

During part of the Modifications Work and subsequent Pre-commissioning and Commissioning activities, some equipment in the existing process/ well platforms shall remain operational. The Contractor shall schedule all activities to minimize disruption to the production of existing platform and shall recognize that limitations will be placed on his access. The Contractor shall comply with all the permit and safety procedures of the existing platform.

The platform Operations Group will control the scheduling and duration of any shutdown of the platform. The contractor shall submit Shutdown Schedule to the Company for approval as part of the Pre-commissioning and Commissioning Procedure. The shutdown schedule shall include the following as a minimum:

A detailed list of all activities
Estimated duration of each activity
Float calculations for each activity
Manpower Histogram for each shifts of the shutdown.

Contractor shall also provide any requests for services and access required e.g. requests for accommodation, access to utilities, crane usage requirements, deck area access requirements, permit requirements etc.

Contractor shall note that its use of Company's facilities is limited and the availability of these facilities cannot be assumed or assured (as is described elsewhere in the contract documents).

4.2. Purging and Cleaning Requirements

Contractor shall prepare procedures for all work on existing systems and submit them for approval before starting work. Before modifications work is carried out on any system, pipe work and equipment shall be prepared in accordance with approved procedures, gas freed and purged as appropriate and as required by Company. Contractor shall arrange and supply nitrogen required for purging. The final oxygen content in process system shall be brought down to less than 2% (V/V). ⚠

The contractor shall develop procedures for the purging of systems prior to the introduction of hydrocarbons. Included in this procedure shall be the purging and gas freeing of existing lines of the platform requiring modification. This procedure shall include the proposed method of purging to be used, the duration of the purge, the purge medium and the acceptance criteria used to determine a successful purge. This procedure shall be approved by the Company prior to the commencement of any works at the platform

5. HSE / RISK MANAGEMENT ⚠

Work onsite shall comply with ONGC's Health and Safety Manuals, Work Permit System and other relevant documents.

The HSE program during Project Hook-up & Commissioning shall focus on the following six (6) main areas:

1) Site Supervision
2) Personnel Awareness
3) Personnel Capability
4) Accident Prevention
5) Management involvement and visibility
6) Pre-Startup Assessment

5.1 Personnel Awareness

Briefing on safety expectations for Project Hook-up & Commissioning supervisory team and Contractor's personnel will be conducted prior to mobilization.

The briefs shall be immediately prior to mobilization

All personnel will again undergo briefing once they arrive at the work site for specific health, safety and security procedures.

The Contractor shall publish and disseminate his HSE manuals and programs to his supervisory and all other personnel prior to mobilization.

Daily tool-box meetings and Job Safety Analysis (JSA) shall be carried out to ensure personnel are aware of work to be performed and the risk, if any, associated with the days work and mitigate steps to take. The work group foreman shall lead the daily morning discussion prior to commencing with work. The Project Hook-up & Commissioning supervisors or discipline engineer or operations personnel shall periodically monitor and participate in the toolbox meeting.

5.2 Personnel Capability

All personnel involved in the Project Hook-up & Commissioning are required to attend mandatory safety training as required by ONGC as a minimum. Contractor's personnel, e.g. rigger / scaffolder, welder, crane operator, grinder, etc. shall undergo trade competence training as required.

Safety investigation training shall be provided for supervisory, inspection personnel for both Project Hook-up & Commissioning and Contractor to provide them knowledge in recognizing root causes of safety incidence and encourage them to be pro-active in safety matters.

5.3 Accident Prevention

Project Hook-up & Commissioning shall carry out inspection on construction tools and equipment prior to issuance to the Project Hook-up & Commissioning personnel to ensure they are fit for service. The inspection shall be done periodically.

Once the tools and equipment have been issued, inspection will be by the user, supervisor, safety officer and discipline inspectors, as appropriate.

All lifting equipment shall be tested, certified and assigned a colour code signifying its certification period.

The Project Hook-up & Commissioning contractor shall screen its personnel prior to their employment to confirm that they are qualified for their assignment and are free from Drug & Alcohol (D&A) abuse. This shall be supplemented by random testing and testing for cause after mobilization.

Contractor Management will carry out safety audits on a regular basis.

Contractor shall implement a hazard identification program as part of daily routine.

ONGC operation shall administer the work permitting procedure for simultaneous operations (SIMOPS) and simultaneous production & drilling (SIPROD) of Project Hook-up & Commissioning.

ONGC Operation shall administer the Emergency Response Plan (ERP). Project Hook-up & commissioning group and its contractor shall formulate an ERP in-line with Operations established ERP procedures.

Contractor shall implement Job Safety Analysis (JSA) or Critical Work Analysis for engineered control of hazards on non-routine or critical activities with high hazard potential.

5.4 ONGC Supervisor's Responsibility

Publish the Project Hook-up & Commissioning Execution Plan after management endorsement and ensure its availability at work site.

Ensure that the Emergency Response Procedure (ERP) and Simultaneous Operations (SIMOPS), Health Safety Environment Management System and other safety documents are available at the Worksite.

Ensure that the Project Hook-up & Commissioning contractor assigns a safety engineer / officer full-time onsite to provide the supervisors with HSE advice.

Daily supervisory planning meeting shall be held between different groups, i.e. Operations, Drilling, project hook-up & commissioning and their contractors. This meeting shall serve as a forum to provide the different groups the guidance to plan / modify each group's activity as necessary to avert any conflict or interference.

5.5 Management Involvement and Visibility

Onsite visits by ONGC management and contractor's management shall be conducted on a regular basis at least once a month. The timing of such visits can be planned that they coincide so that any pertinent HSE issues can be discussed together first hand.

5.6 Pre-Startup Assessment

A pre-startup assessment of the Facilities shall be performed prior to introduction of hydrocarbon into the system. The assessment is performed and documented to confirm that:

- Construction is in accordance with design specifications.
- Safety, environment, emergency, operations and maintenance procedures are in place and adequate.
- Risk management recommendations have been addressed and the required actions taken.
- Training of personnel has been accomplished.

6. MODIFICATION WORKS

Contractor shall carry out modification works, interconnection and hook-up operation as given in Description of work in bid package. It shall be contractor's responsibility to carry out all necessary preparatory work like draining, venting, gas freeing, purging etc., for all the existing facilities required for modification and safe tie-in. It shall be contractor's responsibility to arrange and provide steam, chemicals, nitrogen etc. required for gas freeing operation. It shall be contractor's responsibility to ensure proper safety during tie-in / modification operation.

7. PERFORMANCE TESTS FOR WORKS

The Contractor shall carry out Performance Tests. The Contractor shall develop a detailed procedure for the performance tests in accordance with the requirements of the Contract and submit them to Company for Approval.

If sufficient well fluid is not available to test all streams and compressors simultaneously, the streams and compressors shall be tested individually in a manner approved by the Company and the Contract requirement shall be met at the approved rate used for the test.

7.1 Maximum Rate Performance Test of Platform

A performance test of the platform shall be carried out to demonstrate that everything (including process facilities and utilities) meets its Contract requirement.

The test shall be arranged such that the inlet flow rate to the facilities is ramped up in suitable steps until the Maximum Design Capacity is reached. A 72 hour test period will commence once the process is in a stable operating mode at the Maximum Design Capacity. Any reduction/change to the throughout (outside a band of ± 3%) during the 72 hours will negate the test and it will be recommended for another 72 hours once the flow rate has again stabilized at the design throughput.

During the ramp up period process controls can be tuned. The appropriate process measurements shall be recorded from the beginning of the test, throughout the 72 hours period and during the ramp down.

The performance test shall demonstrate that the works meet the requirements of the Contract. All equipment shall be tested to see that it meets the requirements specified (including capacities). These tests shall include demonstrations of the following (note that this list below is not an exhaustive list of the tests and demonstrations that shall be carried out on these systems);

Well stream heaters - these must also be shown to achieve the desired outlet temperature of the well stream fluids at the design throughput. Critical variables are the inlet and outlet temperature from the exchanger and the shell and tube side pressure drops.

Inlet separators - the ability of the separators to perform the gas/oil/water separation shall be tested. The test must be carried out with the addition of demulsifier to the feed to the well stream heaters. Testing will be required to determine the water-in-oil content of the outlet oil stream, the oil-in-water content of the separated water, and the liquid carryover in the gas stream.

Water treatment – the hydrocyclone system must be tested to ensure the water being discharged to the sea meets the specifications for discharged water. This shall be tested at lower rates during the ramp as well as at the maximum design capacity.

Process gas compression – the compressor train must be run and achieve the required pressure at the connection point to the main compressor outlet whilst achieving the inter- stage and discharge temperature requirements.

Gas dehydration – the gas dehydration package unit must operate in a stable condition and achieve the water dew point specification and glycol carryover specification for the gas. The glycol regeneration unit must operate and produce on specification glycol for return to the TEG column.

Booster gas compression – the booster gas compressors must achieve the desired outlet pressure at the design suction pressure and throughput. The pressure at the inlet to the PGC must be achieved at the maximum design capacity.

Hot oil system – the hot oil system must achieve the required hot oil supply temperature under all operating scenarios during the test. This will require that the well-stream heaters be on line so that the supply to these units can be confirmed.

The Instrument air package – the instrument air system shall be capable of providing the required air quality at the required flow rate. The air drier must operate for the design period before regeneration commences.

Fuel gas – the fuel gas system shall be shown to be capable of providing sufficient dry, superheated gas to the users.

Potable water – the potable water maker must produce the specified water quality and be shown to meet its design capacity requirements.

The test must successfully demonstrate that all equipment operates to specification and the shutdown systems for each system and the overall facility, work as required. As part of the test, the process simulation model of the process must be updated and validated against operating data. This will require some sampling and analysis of the Process streams in the facility.
At the end of the 72 hour test period the flow rates shall be ramped down and process recordings continued unit flow is stopped. The shutdown systems can be tested during the ramp up and ramp down period, but should not be tested during the 72 hour stable operation period.

The Contractor shall develop an extensive test procedure for the above, including details of all process measurements and analyses to be carried out.

7.2 Minimum Rate Performance test of Platform

The test procedure described above shall be repeated at the Design Minimum Capacities but for a period of 12 hours.
The Performance test shall demonstrate the works meets the Design requirements and demonstrate those things described in Section 6.1.

7.3 Performance Test of the Modifications

Performance test of the Modifications shall be carried out in a similar manner and scope to these nominated in Section 6.1 and 6.2.

They shall demonstrate that the Modifications meet the requirements of the Contract over the range of rates between Maximum Design Capacity and Minimum Design Capacity.

8. GENERAL

8.1. Vendor's representatives

The Contractor shall arrange manufacturer's representative(s) (at fabrication yard and offshore) of at least the following major equipment/systems (as applicable as per Scope of Works) during operability tests, pre- commissioning and until the satisfactory completion of the Performance Tests. The period required to be on the platform shall be that needed by contractor and that required and approved by company.

- ✓ Process Gas compressors
- ✓ Booster compressors
- ✓ Turbine generator package
- ✓ Emergency Generator
- ✓ Well fluid heater
- ✓ Separator
- ✓ HIPPS
- ✓ Multiport Valve
- ✓ HPU
- ✓ Gas dehydration packages
- ✓ Hot oil package/ WHRU
- ✓ Air compressor package
- ✓ HVAC
- ✓ Water maker
- ✓ Nitrogen Generator Package
- ✓ Fuel Gas conditioning skid
- ✓ Main injection pump package
- ✓ Sea water lift pump package/Utility Water pump package.
- ✓ Chlorinator package
- ✓ Sewage treatment plant package
- ✓ Main oil transfer pump package
- ✓ Produced water treatment system
- ✓ Communications systems
- ✓ Distributed Control System (DCS)
- ✓ Emergency Shutdown System (ESD)
- ✓ Fire and Gas System
- ✓ Battery and Battery charger
- ✓ HT/LT transformers.
- ✓ CP system
- ✓ Pedestal deck crane

- ✓ UPS
- ✓ Fire water pump
- ✓ Survival craft
- ✓ MPFM & MPV
- ✓ Chemical dosing / Injection Pumps.
- ✓ Oil Metering Systems.
- ✓ Gas Metering System.
- ✓ Online corrosion Monitoring
- ✓ Flare system
- ✓ SSIVs

In addition to above the contractor shall retain manufacturer's representatives for at least the following equipment on the platform during commissioning and at least two (2) weeks after successful commissioning of the platform facilities.

- ✓ Booster compressors
- ✓ Gas compressors
- ✓ Gas dehydration packages
- ✓ Turbine generator package
- ✓ Emergency Generator package
- ✓ HVAC
- ✓ Water Maker
- ✓ Sewage treatment plant package
- ✓ Hot oil package
- ✓ Main Oil transfer pump
- ✓ Separator
- ✓ Communications systems
- ✓ Distributed Control System (DCS)
- ✓ Emergency Shutdown System (ESD)
- ✓ Fire and Gas System
- ✓ Oil Metering System
- ✓ Gas Metering System.

The contractor's key commissioning personnel (at least one for each discipline, i.e. mechanical, electrical, instrumentation, electronics & process) shall be retained on platform for 30 days after successful commissioning of the complex.

8.2. Spares, Utilities ⚠

The contractor shall be responsible for submission of list of one year operational spares. The contractor shall provide list of spares and responsible for initial fill up and six month supply of consumables (like lube oil, lubricants, etc.) for the platform operations after modification works are mechanically completed, pre-commissioned/ commissioned and handed over to the company. Contractor shall refer section 5.16 of 3.0 part II general condition of contract.

All utilities required during pre-commissioning of the facilities including power, water, air, cranes, etc. shall be provided by the contractor. In no case the facilities provided on the platform shall be used for this purpose unless authorized by the company.

It shall be contractor's responsibility to supply lubes, chemicals, purging materials and other pre-commissioning aids required till the platform is handed over to the company. It shall be contractor's responsibility to repair any damage to the system occurred during load out, transportation and installation and pre-commissioning of the facilities.

The contractor shall maintain a record of the start-up spares consumed during pre-commissioning and hand over the balance items to the company.

8.3. Handing over of Materials ⚠

After the mechanical completion and completion of pre-commissioning activities for all the systems installed on the platform by the contractor, the contractor shall hand over to the company all the materials which shall include but not limited to the following:

- ✓ All loose supply material
- ✓ Special tools and tackles
- ✓ Commissioning spares
- ✓ Spares as specified in relevant functional specifications

8.4. Special requirements

It shall be Contractor's responsibility to install, calibrate and make all laboratory and workshops equipment operable. Contractor shall involve Company's chemist and maintenance engineers and impart necessary techniques and know-how required for operation and maintenance of this equipment.

9. DOCUMENTS TO BE SUBMITTED

9.1. Operating Manual

The Contractor shall prepare a draft start-up and Operating Manual for all of the facilities that are included in the Works and submit to Company at least 150 ⚠ days prior to start of pre-commissioning activities for approval. Quantity of operating manuals requirement for all equipment shall be provided as per respective specification given elsewhere in bid package. The related attachments will go with each manual. The following information shall be included and hyperlinked in one single soft manual for easy maneuvering:

- ✓ Design basis of facilities
- ✓ Detailed process/ facilities description.
- ✓ Pre-commissioning check
- ✓ Start-up, normal operation & shut down procedures for each equipment.
- ✓ Platform start-up procedure.
- ✓ Platform normal operation procedure
- ✓ Platform shut down procedure (normal/emergency)
- ✓ Vendor instructions for all equipment for normal operation and trouble shooting.
- ✓ Emergency procedures.
- ✓ Operating parameters and set points of different alarms and trip devices
- ✓ Summary of chemical consumption including list of recommended Indian equivalent.
- ✓ Summary of utilities consumption for each equipment.
- ✓ Lubrication Schedule (include Indian equivalent, initial fill, frequency of change of lubricant and 6 months requirement).
- ✓ Gas detection and associated safety system operation, calibration and maintenance procedure.
- ✓ Life saving devices operation and maintenance procedure.
- ✓ Routine structural maintenance check.
- ✓ List of equipment (showing skid size, weight, purchase order no., vendor data book reference tag no.)
- ✓ Effluent disposal.

The manual shall have the following attachments as a minimum:

- Reduced size copies (275 mm x 425 mm) of line lists
- Equipment and instrument data sheets in accordance with purchase order

- Electrical Single line diagrams, area classification drawings and control schemes
- Pump characteristic curves
- Process Flow Diagrams (PFDs) & Piping and Instrumentation Drawings (P & IDs)
- Booster compressor start & shutdown procedure, logics and protection system. ⚠
- Process gas compressor start-up & shutdown procedure, logics and protection systems ⚠
- Gas turbine generator start-up & shutdown procedure, logics and protection system ⚠
- Safety Logic Diagrams and Safe charts.
- Recommended proforma for recording routine parameters during normal operation for PGC, booster compressor, TG, DG set, IA/UA compressor and fire water pump and cathodic protection system and all process equipment.
- Equipment layout.
- Safety escape routes
- Field location maps.
- Layout and location Maps for fire and safety equipment's.
- All hardware and schematic drawings of system packages like PCS, PLC-based ESD etc. shall be as-built ⚠

The contractor shall submit the draft Operating Manual to the Company for approval. The Contractor shall discuss the comments with Company & incorporate the comments in the final document. The Contractor shall submit the final document for approval to the Company. After the document is approved by the company/ engineer's representative, contractor shall make the required number of copies, specified elsewhere and submit to the company/ engine r's representative. This manual l shall be followed during start-up and commissioning of the facilities. Vendor operating and maintenance manuals shall be submitted along with the final operating manual. ⚠

The operation manual can be divided into two or three parts if the thickness of manual exceeds 80 mm. It shall describe, pre-start up checks, start-up procedures, shut down procedure and normal operation for an equipment vendor recommended procedure and integration of that equipment with other facilities. Contractor shall also submit 150 days before the commissioning the system operating Manual for

the distributed control system (DCS), which shall contain system description, operating instructions and necessary information for the familiarization of the operator.

9.2. Pre-commissioning documents:

The Contractor shall submit a detailed schedule for carrying out the pre-commissioning activities in a network form.
Contractor shall prepare detailed format of checklists of pre-commissioning and commissioning activities for each equipment/system. The Contractor shall submit the said format for approval of the Company. These check lists shall describe the checks/test to be carried out on each equipment/system, shall also indicate if a particular check/test is to be carried out at the yard or offshore.

All the check list points shall be dealt by the Contractor. Determination of the system readiness for commissioning shall be determined based on the relevant portion of check lists have been completed by the Contractor.

For the purpose of execution of these pre-commissioning activities, the entire platform shall be divided into system and sub-systems. The pre-commissioning document shall contain the following:

- System / sub-system identification.
- Detail procedures for the various pre-commissioning activities, such as system check, flushing, de-watering, drying, leak test, purging etc. with format to record the observations of the activities carried out.
- Procedures and formats for recording the operability test/performance test for different equipment/system.
- Lube schedule, indicating the nomenclature (Indian equivalent) of lubes, quantity of initial fills.
- Listing of commissioning and start up spares.
- List of pre-commissioning activities to be carried out at fabrication yard, or offshore, or at both places.
- High-pressure leak check procedure of gas system.
- A detailed procedure for management of any special bypass or defaults required for commissioning.

The Contractor shall submit a draft pre-commissioning documents 180 days before the activities are to be carried out. The document shall be reviewed by the Company. The Contractor shall submit a revised document after incorporating Company's comment

for approval to the Company. The approved document shall be submitted 120 days prior to starting of the pre-commissioning activities.

At the end of pre-commissioning activities, all the pre-commissioning test records (duly signed) shall be compiled by the Contractor. Three copies of documents for each system shall be delivered to the Company.

9.3. Modification/hook up procedure

During part of the Modifications Work and subsequent Pre-commissioning and Commissioning activities, some equipment of the existing platform shall remain operating. The Contractor shall schedule all activities to minimize disruption to the production of the existing platform and shall recognize that limitations will be placed on his access. The Contractor shall comply with all the permit and safety procedures of the platform.

Contractor shall produce a procedure with his detailed shut down requirements for the various hook-ups required to be carried out on the platform. This shall be presented to company for approval within 120 days ⚠ of Notification of Award. Contractor shall submit, along with Pre- commissioning procedure, a detailed procedure for carrying out modification works, interconnections and hook-up operations for the facilities. An Isolation scheme to be prior to carrying out modification works shall be worked out in advance and detailed in this document.

A Separate Hook-up Procedure for modification at platform along with pre-engineering survey document shall also be submitted to Company for review as part of the Commissioning Procedure.

9.4. Commissioning procedure

Contractor shall prepare this document to detail out the procedures and sequence of commissioning of the project facilities including the log sheets for logging of parameters of different equipment/ system during commissioning. The contractor shall have required inputs from the company and the vendor's representatives. The document shall include the shift rosters for the contractor/vendor's representative to be deployed during commissioning operation. This document shall be submitted to the company for approval, 120 days prior to the commencement of commissioning operation.The document shall also include log sheets for the Performance Test. The document shall be submitted to the company for approval as described in Section 4.

9.5. Other requirements

The Contractor shall provide safety equipment locations, H2S safety information chart, warning signs and escape route drawings (framed). These drawings must be placed in locations approved by the Company before the platform is commissioned. The Contractor shall also provide adequate numbers of NO SMOKING boards, which will be installed where required by the Company.

An emergency plan shall be prepared and shall be in place prior to commencement of Pre-commissioning and commissioning activities. The plan shall define the actions, personnel and facilities required in case of an emergency.

In addition to the other requirements of the Contract, Contractor shall supply adequate sets (A3 size) of Process & Instrument Drawings, electrical single line diagrams and wiring diagram to the company to facilitate system check before start of hook-up work. The Contractor shall also provide two sets of PFDs on acrylic sheets which will be installed at locations specified by the Company.

9.6. Yard checkout before Load out

Prior to load out, the Contractor shall carry out, at the yard, a check of the facilities for correct erection and installation, operability, maintenance requirement and safety of plant and personnel during operation in accordance with accepted international good engineering practices, this will be witnessed by the Company. The Contractor shall carry out all modifications and corrections in accordance with the final punch list prepared jointly by the Contractor and the Company.

9.7. Modification and Hook up with platform

Contractor shall carry out hook-up operation of modification works at Platform. Contractor shall obtain and produce details of all existing platforms for this purpose during a pre- engineering survey of existing platforms.

The Contractor shall carry out the required pre-commissioning activities for the existing system which are either modified or hooked up to the new facilities. Contractor shall carry out all preparatory work necessary including: draining, venting, gas freeing, purging etc. for facilities at platform required for safe tie-ins. It shall be the Contractor's responsibility to arrange everything required to safely complete these operations. Contractor shall also ensure safety of personnel during tie-in operations.

9.8. Manpower for Commissioning

For commissioning of the platform, Contractor shall deploy personnel with experience in operation of similar facilities, commissioning shall be round the clock uninterrupted

operation. The Contractor shall arrange & provide all categories of personnel i.e. shift engineers, operators, technician, chemist, safety engineer etc. required for manning the platform during commissioning operations. The Contractor shall submit the commissioning organization chart with details of the experience and qualifications of key commissioning personnel for approval to the Company. Contractor shall modify the charts to incorporate Company requirements. Contractor shall submit this chart along with pre-commissioning documents.

ATTACHMENT A

Pre-Commissioning Check List

1. PRE-COMMISSIONING CHECKLIST

This checklist represents the absolute minimum of work which has to be performed by the Contractor prior to commissioning of the facilities. It is not intended to be a complete list of activities required. Manufacturer's instructions for pre-commissioning checks/ testing shall be followed for all equipment.

1.1. General procedure

The general work procedures listed below outline the work to be performed by the Contractor. Other procedures applicable to specific system or items of equipment may be covered elsewhere in the contract.

1.2. Packing and seals

- Install mechanical seals, permanent packing and accessories wherever required.
- Adjust and replace mechanical seals, packing and accessories, as necessary, during pre-commissioning period.

1.3. Removal of temporary supports

Removal all temporary supports, bracing or other foreign objects that were installed in vessels, transformers, piping, rotating machinery or other equipment to prevent damage during shipping, storage and erection/ installation.

1.4. Alignment of rotating equipment

- Check rotating machinery for correct direction of rotation and for freedom of moving parts before connecting driver.
- Make cold alignment to the manufacturer's tolerances along with Company. Provide all the alignment readings records to Company. Contractor shall prepare the formats (unfilled) and submit to Company for approval.

- Check all lubricants and their quality, fill etc. before operating the equipment.
- Carry out uncoupled run of motors, check bearing temperatures, vibration, no load currents, over current trips, function of different safety devices and carry out adjustments as required.
- Make hot alignment and any dowelling required after equipment has been put in operation.

- Obtain manufacturer representative for equipment as required during installation and/or pre-commissioning and commissioning.

1.5. Tie-ins at unit limits

Prepare all systems for safe tie-ins with bridge connected platform or with existing operating systems. Contractor shall prepare the systems for Tie-ins in consultation with Company and will be responsible for safety during tie-ins being made. Contractor shall gain approval of Company for the safety measures to be taken by them before any tie-in work is taken up.

1.6. System check / inspection

Provide inspection facilities to the Company to check that erected facilities conform to Process & Instrumentation Diagrams, construction drawings, vendor drawings and specifications approved for construction.

Verify and approve the facility check. Note exceptions, if any, on a separate work order list (punch list).

1.7. Site modifications

Carry out site modifications as found necessary during system checks and inspection from the viewpoint of routine operations, maintenance and safety of the platform. A list of such jobs shall be prepared by the Company and shall be handed over to the Contractor for execution.

1.8. Flushing

Perform flushing and blowing of all piping to remove dirt, welding slag, etc. Arrange for cleaning media (potable water or compressed dry air, as applicable) for carrying out flushing/blowing and disposal of the cleaning media in accordance with minimum procedures to be developed by the Contractor and approved by the Company. Following is the minimum velocity of cleaning media to be maintained for flushing/blowing of piping:

AIR: - 2.4 – 2.7 m/sec
WATER: - 1 – 1.2 m/sec.

1.9. Temporary screens, strainers and blinds

- Provide and install temporary strainers where required. Install permanent strainers after initial operation.

- Clean strainers as required during pre-commissioning and commissioning.
- Provide, install and remove all blinds required for flushing or operation.
- Change gasket if necessary.

1.9.1. Leak Test ⚠

- Leak test of complete process facilities including piping, equipment, instrument connections etc. to be carried out in accordance with ASME 31.3 latest addition after completion of pre-commissioning activities, safety checks and hydro test.

- Notify the Company of test schedule at least two weeks in advance. All the tests are to be witnessed and the test record on satisfactory completion of the test be signed by Company.
- Provide 4 copies of all the test records to the Company.

- Provide any special media, if required for test purpose and provide facilities for disposal.

- Conduct all operational tightness testing

1.9.2. Vacuum tests

Carry out vacuum test to rectify any leakage

1.10. Safety devices

- Provide the Company with a list of proper settings for safety devices.
- Install all safety devices on the equipment.
- Test and adjust all safety devices such as PSVs, TSVs at offshore and seal wherever necessary. Other safety instruments/ instruments systems inclusive of field devices, Well / fire shutdown panel, gas detection system shall also be tested.

1.11. Purging

Install necessary purge connections and carry out system purging including that of flare and vent with Nitrogen in accordance with Company approved procedure. The final Oxygen content in purged systems shall be reduced to an approved safe limit. Contractor shall arrange & supply the Nitrogen required for purging.

1.12. Drying out

Dry out necessary facilities wherever required by Company.

1.13. Lubricants and chemicals

Procure and supply initial fill of all lubricants, chemicals, resins, desiccants and other similar materials, replenish the chemicals consumed during pre- commissioning and commissioning.

Inspect vessel interior along with Company representative/ certifying authority before filling of chemicals for proper cleanliness.

1.14. House keeping

Provide continuous clean-up of the construction and operational area. Remove excess materials, temporary facilities and scaffolding and pick up trash. Perform washing for further clean-up as required.

1.15. Equipment protection and spare parts

Protect equipment from normal weather conditions, corrosion or damage before commissioning.

Provide all installation and commissioning spares.

1.16. Chemical Cleaning.

Perform special chemical cleaning or pickling of the critical piping and compressor suction piping, etc. in accordance with vendors approved procedures

1.17. Firefighting & lifesaving equipment

- Ensure correct installation of all firefighting and lifesaving equipment.
- Carry out function test of fire detection devices, foam and fire water spray system.
- Carry out load test of survival crafts in accordance with company approved procedure.
- Carry out Visual inspection of portable apparatus and ensure that these are installed at critical locations.
- Visual inspection of survival crafts, checking the inventory of items, starting of engine by battery and manual cranking.
- Mock demonstration of complete operation of survival craft including a run of 10-15 kms.

1.18. Miscellaneous

To carry out any other check/test as required by Company and provide all test certificate as required by the Company.

1.19. Operability test for a system/equipment

The Contractor shall provide a procedure for carrying out the operability test of each equipment/system to prove that the equipment/system installed meet the design

specification. This procedure shall include log sheets wherein the operating parameters shall be recorded hourly.

Each system / equipment shall be subjected to an operability test to determine that it operates in accordance with its specifications and the design intent over the full range required by the Design Criteria. The operability test shall be conducted, using all ancillary equipment, auxiliaries and controls, continuously for the duration specified in these documents after stability conditions have been attained. If no duration is specified the test shall be conducted for 4 hours after stability has been attained. If the test is interrupted due to any reason, the test shall be started afresh.

The operability test shall be carried out by the Contractor and the vendor's representatives, wherever applicable and witnessed by Company.

The Contractor shall make necessary checks, adjustment, repairs required for normal operation of the system/equipment. All the safety devices shall be tested for their proper operation.

Upon completion of the Operability test, the log sheet with all observation shall be signed by the Contractor, Vendor, Company representatives. The Performance shall be evaluated based on the data and observations made during the operability test. In case of any dispute, the decision of Company shall be final.

2. SPECIFIC PROCEDURES

In addition to the work to be performed in accordance with the above, the detailed procedures outlined below further define the work responsibilities of the contractor for specific systems and items of equipment.

2.1. Vessels

- Open vessel after erection and put in place any internals requiring field installation.
- These internals shall be inspected before and after installation. Open both internal and external man ways for inspection of vessels by the company.

Check filter media/packing for correct level (if applicable)

Note: Vessels that have been pressure tested in the shop may require retesting offshore if required by the company. They shall, however, be included in the testing of attendant piping systems whenever practical and approved by the company.

2.2. Shell and Tube Exchangers

- Perform internal inspection/testing as required by specifications or drawings

- Perform separate field testing, if desired by the company of Exchangers that have been shop tested.
- Cross leakage for exchangers may be tested at company's discretion
- Check electrical earthing of vessel.
- Check piping connections flange face alignments and remove any blinds installed while construction/testing
- Check mounting of instruments & safety valve
- Check for correct insulation/paint/name plate

NOTE: Shell and tube exchangers that have been pressure tested in the shop may require testing offshore if required by the company. They shall, however, be included in the testing of attendant piping system whenever practical and approved by the company. If shell and tube exchanger is taken in piping system test and the exchanger is designed for differential pressure, proper care shall be taken to ensure that differential pressure between shell and tube side is not exceeded beyond the maximum recommended differential pressure during the testing.

2.3. Air Cooled Exchangers

- Inspect exchangers to ensure that temporary shipping supports and erection material have been removed.
- Check fins and fan for shipping damage.
- Perform separate field testing, if desired, of exchangers that previously have been shop tested

Note: - Air cooled exchangers that have been pressure tested in the shop may require retesting offshore if required by the Company. They shall, however, be included in the testing of attendant piping systems whenever practical and approved by the Company.

2.4. Pumps, Compressors, and Drivers

- Level base plates and sole plates.
- Alleviate any excess piping stresses that may be imposed on pumps, compressors, and drivers.
- Chemically clean lube oil, seal oil system, when specified. Dispose of wastes and cleaning media in accordance with Company's instructions.
- Change the lube oil, seal oil, and cooling systems with flushing oil and circulate for cleaning purpose. Dispose of any flushing oil in accordance with the Company's approved procedure.
- Change the lube oil, seal oil and oil cooling systems with the operating oil after removal of flushing oil recommended by the manufacturer
- Provide service engineer for technical assistance during installation and/or pre-commissioning and commissioning as specified

2.5. Piping Systems

- Notify the Company of hydro test schedule at least two weeks in advance.
- Orifice plates, control valves and any other on -line instruments should not be installed before testing and flushing. If installed, they shall be removed and necessary spool pieces shall be provided in their place wherever required.
- Piping system shall be thoroughly flushed and cleaned to the satisfaction of the Company.
- Hydrostatically or pneumatically test all piping as required by the Drawings or specifications.
- After testing, drain and dispose of the test media in accordance with the Company's instructions. All the piping will be dried using air and sealed.
- Check pipe hangers, supports, guides, and pipe specialty items for the removal of all shipping and erection stops and for the correctness of cold settings for the design service.
- Check pipe hangers, supports, guides, and pipe specialty items for hot settings and make minor adjustments as necessary.
- Install seals on valves where necessary.
- Correct support, vibration, and thermal expansion problems detected during commissioning.
- Ensure appropriate permanent gaskets are installed and all flanges are tightened properly.

Refer Functional Specification Piping Fabrication & Installation (2004B).

2.6. Electrical Power and Lighting systems

- Notify the Company of the test schedule prior to commencement of work.
- Using a megger, make insulation tests on all wiring.
- Insulation tests are to be carried out on all HT/LT cables, HT/LT panels & lighting boards etc.
- Using a megger, make insulation tests on generators, motors, and transformer windings from phase to phase and phase to ground.
- Make grounding system test to determine the continuity of ground connections and the value of resistance to ground.
- Carry out insulation tests on all dry transformers
- Make trials and adjustments and functional tests on all switchgear, control panels, and motor control equipment.
- Test-set switchgear relays for proper coordination.
- Check phase sequence and polarity.
- Energize the complete power system with approval of the Company after completion of all tests.
- Check installation and operation of emergency power systems.
- Check that all electrical equipment is certified for the environment in which they are located.
- All relays are to be tested as per OEM recommendation.
- No load current of all the equipment is to be recorded. Three copies of all the test results to be provided to Company representative

- Make function test at LT / HT switch gear.
- Illumination level checks are to be done for entire lighting system.
- Check phase sequence & polarity.
- All UPS Powered systems shall be operated for 8hrs on UPS power.
- All HMI Functionalities shall be checked in HT/LT switchgears

2.7. Instrument Systems

- The Contractor will make all non-operating checks that will ensure instrument operability, i.e. remove all shipping stops; check pointer travels' and verify instrument capability to measure, operate and stroke in the direction and manner required by the process application.
- Clean all transmission and control tubing by blowing with cooled and filtered clean air before connecting to instrument components.
- Clean all air-supply headers by blowing with clean air and check them for tightness.
- Leak test pneumatic control circuits in accordance with ISA Recommended
- Practice RP 7.1. Pneumatic Control Circuit Pressure Test, 1956.
- Check piping from instruments to process piping for tightness.
- Install and connect all system components and verify their conformance to specifications and design criteria for function and range using dummy transmission signals as needed.
- Check all electrical signals and alarm wiring for continuity, correct source of power, and polarity.
- Check thermocouples f o r proper joining of wires, position of elements in wells, proper polarity & continuity of receiving instruments.
- Identify orifice plates by tagging and check for proper installation of upstream side of plate.
- Isolate, or remove if necessary, online components such as control valves, positive displacement meters, and turbine meters for pressure testing. Reinstall these items after testing the system.
- Check bores of orifice plates and install these plates after completion of flushing operations.
- As dictated by the Company's specification, calibrate instruments with standard test equipment and make all required adjustments and control point settings.
- Fully pressurize and energize the transmitting and control signal system(s) by opening process connections at primary sensors and final regulators, and by making control mode settings for automatic operation of equipment as the process unit is charged and brought on stream.
- Check settings of all alarm and shutdown switches.
- Check all shutdown systems before commissioning.
- Check all safety valves and settings. Ensure that safety valve isolation valves are locked open in accordance with drawings.

2.8. Potable Water System

- Inspect for completeness and correctness of installations and make any non-operating checks that may be required.
- Make the necessary operating tests and adjustments to water maker systems.
- Provide all water treatment chemicals.
- Carry out quality checks on potable water.

2.9. Water System (Fire Water System and Sea Water Systems)

- Inspect for completeness and correctness of installation and make any non-operating checks that may be required.
- Clean and install screens in the suction line before water circulation.
- Operate pumps to check correct operation and output of system.
- Obtain and install all required firefighting chemicals and portable equipment such as houses, fire extinguishers, and related equipment.

2.10. Sewage Treatment and Disposal

- Inspect facilities for completeness and correctness of installation and make any non-operating checks to ensure their conformance to specifications.
- Operate all equipment and supply all chemicals and agents dedicated to waste treatment.

2.11. Building and Accessories

- Check installation of buildings and accessories, including all heating, ventilation and air conditioning equipment, to ensure their completeness and conformance to specifications.
- Operate heating, ventilation and air conditioning systems and make all performance tests.
- Check for correct pressurization achieved where ever provided, with reference to the start-up purging and alarm system.

2.12. Cranes and Hoists

Check all materials and equipment handling systems to assure freedom, direction of movement, and proper operation

Load test of deck cranes will be required if the deck crane is installed offshore or if it cannot be tested adequately onshore or if required by the company.

2.13. Fire and gas detection and firefighting system

After installation work of detector heads is complete, all the fire detection systems and the fire safety panels such as UV detectors, thermal detector, and smoke detector shall

be tested to demonstrate that the system and its components work in accordance with the contract and the design. This shall include annunciation at fire & safety panel, shutdown of the facilities, starting of the fire suppression system etc. procedures for testing the clean agent system shall be produced and carried out after approval of company.

The dry chemical system shall be checked for proper Nitrogen cylinder, quality & quantity of powder, and actuation system. Each hose station shall be tried for its intended application. A separate Nitrogen cylinder shall be used for the trial run. All the foam and fire hose stations, monitors shall be tried.

All the portable fire extinguishers & other safety equipment shall be installed at company's approved locations. Deluge valve testing shall be carried out

2.14. Shutdown system

The ESD system shall be checked for closure of all valves, shutdown of generator & other rotating equipment, etc. the ESD and FSD systems shall be checked by manual pull switches and by removal of fusible plug from fusible plug loop.

2.15. Control panels

The control panel and shutdown panels, annunciators shall be checked for all process, fire, gas and ESD/FSD signals. The panels shall be checked for visual as well as audible alarms.

2.16. General

All utilities, namely running of utility pumps, firewater pumps, air compressor, air conditioning, pressurization system, crane and essential lighting system shall be operational before fuel gas is fed to the platform.

Section 6.0

Pre-Commissioning, Commissioning Procedure & Performance Tests (Well Platform)

PN/RS	AKG	SVB	25	28.06.2021	2A
MSA	BS	RKS	34	31.03.2017	2
-	-	-	-	-	1
-	-	-	-	-	0
Prepared / Revised By	**Reviewed By**	**Approved By**	**No. of Pages**	**Date**	**Rev. No.**

CONTENT

1. Introduction
2. Definitions
   2.1. Mechanical Completion
   2.2. Ready for Pre-Commissioning
   2.3. Pre-commissioning Activities
   2.4. Ready for Commissioning
   2.5. Design capacity
3. Execution of pre-commissioning activities
   3.1. Factory Acceptance test Requirements (FAT)
   3.2. Minimum Pre-commissioning Activities to be carried out at Yard
   3.3. Minimum Activities to be carried out at Offshore after Installation and Hook-up
   3.4. Site Acceptance Test (SAT)
   3.5. Pre-commissioning of Modification works
4. Commissioning
   4.1. Shut down Requirements
   4.2. Purging and Cleaning Requirements
   4.3. Preservation of systems
5. HSE / RISK MANAGEMENT
   5.1. Personnel Awareness
   5.2. Personnel Capability
   5.3. Accident Prevention
   5.4. ONGC Supervisor's Responsibility
   5.5. Management Involvement and Visibility
   5.6. Pre start-up assessment
6. General
   6.1. Vendor's representatives
   6.2. Spares, Utilities etc.
   6.3. Handing over of Materials
   6.4. Special requirements
7. Documents to be submitted
   7.1. Operating manual

7.2. Pre-commissioning documents:
7.3. Modification/hook up procedure
7.4. Commissioning procedure
7.5. Other requirements
7.6. Yard checkout before load out
7.7. Manpower for Assistance during Commissioning & start of Production

Pre-Commissioning checklist (Attachment A)

1.1. General Procedures
1.2. Packing and Seals
1.3. Removal of Temporary Supports
1.4. Alignment of Rotating Equipment
1.5. Tie-ins at Unit Limits
1.6. System Check/Inspection
1.7. Site Modifications
1.8. Flushing
1.9. Temporary Screens, Strainers and Blinds
1.10. Leak Tests
1.11. Safety Devices
1.12. Purging
1.13. Drying out
1.14. Lubricants and chemicals
1.15. House keeping
1.16. Equipment Protection and Spare Parts
1.17. Chemical Cleaning
1.18. Fire Fighting & Life Saving Equipment
1.19. Miscellaneous
1.20. Operability test for a system/equipment

1. INTRODUCTION

Contractor shall pre-commission, commission (such as crane etc.) and carry out the Performance Tests on the Works including all the facilities of the Well Platform, listed in Description of work in the bid package and make them ready for Platform commissioning Prior to performing said activities Contractor shall submit a procedure for the same well in advance as per guidelines stated herein for Company's review and approval.

This procedure defines the following stages of the Works:

- Mechanical Completion
- Pre Commissioning activities
- Commissioning activities
- Performance Tests

For other requirements of testing refer Basic Bid Work, respective Design Criteria and respective Functional Specification given elsewhere in Bid Package.

A Pre-commissioning activity shall be c o n s i d e r e d to be complete only when it has been witnessed and the procedure and the results of successfully carrying out that procedure have been signed off by both Contractor and Company. Company may also require Vendor's representative to witness and sign that document.

During the pre-commissioning & commissioning activities, the Contractor shall involve Company's operating staff (nominated by t h e Company) and impart necessary techniques and know-how required for operation and maintenance of the facilities.

2. MECHANICAL COMPLETION

2.1 Definition

Mechanical Completion of the Well Platform and modification work is defined as the state when all systems including utility and auxiliary facilities have installed in accordance with the drawing and specifications and ready for pre-commissioning in safe manner and in compliance with project requirements and accordingly certified by the Company or company authorized representative.

Mechanical completion of a system includes following but not limited to:

- All design and engineering has been completed
- All installation work for that system including all equipment has been completed in accordance with "Approved for Construction" drawings, specifications, applicable codes and regulations and good engineering practices, all tie-in connections have been made,

all testing and inspection completed and system/ facilities are ready for pre-commissioning.

- All instruments have been installed as per Installation Standards.
- All tie-in connections have been made.
- All Factory Acceptance Tests and all other testing and inspection activities have been completed.
- Contractor has obtained all relevant approvals from the company.
- Safety Studies have been completed and satisfaction of all the Safety Studies' requirements has been met and all documentation put in place.
- All required documentation and certification documents required by the Contract have been supplied.
- All operating procedures and maintenance procedures have been forwarded to the
- Company well in advance for review.
- All items for which Contractor is responsible for obtaining third party, regulatory or Company approval have been obtained and confirmation documentation has been provided to Company.
- All software systems have been loaded and proved
- Construction-related equipment has been removed from the platform, leaving only that is necessary to pre-commission and commission the works.

2.2 Ready for pre-commissioning

The work is Ready for pre-commissioning when the Company has issued a certificate for Mechanical Completion and notification in writing that the Works is Ready for Pre – commissioning.

2.3 Pre – commissioning activities

Pre-commissioning activities are activities to be performed after Mechanical Completion of a piece of equipment or system or sub-system to make it safe and ready to receive hydrocarbons and Ready for Commissioning. This includes:

- Performance of all remaining works other than commissioning and Performance Tests.
- Making operational and commissioning all systems that can be made operational before process fluids are introduced.
- The completion and testing of the platform, equipment & systems
- Testing of all parts and systems of the Works including the communications systems (if required).

- Provision of initial fill of packing, chemicals, inhibitors, lubricants, glycol, water and other stocks has been made.
- Provision of temporary launcher/ receiver, if required, to carry out pre - commissioning activities for the pipelines, Checking site modifications.
- Internal inspection of the vessels
- Flushing/cleaning of vessels & piping
- Hydro testing and pneumatic testing of vessels (at vendor place ⚠), piping and pipelines.
- Calibration of Pressure safety valves (PSVs) etc.
- Calibration of all the instruments & documentation /report.
- Loop checking including HIPPS & Corrosion system.
- Complete checking of the safety system.
- Checks on electrical system and other vendor packages.
- The delivery, storage and cataloguing of all spare.
- Items for which a defect Notices are issued by company at any earlier stage are to be rectified and all defect Notices shall have been closed out prior to this activity.
- The Completion Documents along with all Design Documents to As-Built.
- The preparation of the commissioning plan and submission to Company for review.
- Removal of all debris and construction equipment from Site. Further details are given in Attachment A.

2.4 Ready for Commissioning

Ready for Commissioning means the point at which the Company issues a certificate to the Contractor saying that the system is ready for commissioning. Ready for commissioning status shall be jointly reviewed by the company/ contractor. At this point all systems and equipment shall be at a stage where process fluids can be safely introduced and all equipment can be safely operated with all controls and safety devices in service to meet the requirement as per design specification

2.5 Design Capacities

The maximum design capacity and minimum design capacity are defined elsewhere in bid package.

3. EXECUTION OF PRE-COMMISSIONING ACTIVITIES

Contractor shall complete all the pre-commissioning activities in accordance with conditions stipulated under Attachment A and as per instructions from vendor's of individual equipment. Contractor shall write necessary procedures and obtain approval from Company prior to commencing work and shall carry out the work in accordance with approved procedures.

The Contractor shall complete as many of the pre-commissioning activities as possible at the fabrication yard to minimize the working time in offshore. A guideline for carrying out the pre-commissioning activities at yard/offshore is given below. These are minimum requirements only.

Contractor shall repeat these yard tests offshore in so far as is necessary to demonstrate that the equipment has not been damaged during transit from yard to offshore site and during erection/installation ⚠2 at offshore and that it is in the same condition as it was when first tested.

The Contractor shall submit a detailed schedule and procedure for carrying out these activities for approval by the Company before starting work.

3.1 Factory Acceptance Test Requirements (FAT)

As a minimum Factory Acceptance Test shall be required on the following packages:

- HIPPS System
- HPU System
- DCP skid with hose reel
- Well/ Fire shutdown system (SDP)
- Nav-Aid system along with battery,
- F& G Detector
- Fire & Gas detection system
- Multi-phase flow meter
- Coriolis Flow meter, Ultra sonic meter, Magnetic flow meter
- Multi-port valve
- Testing of PSV
- Communications system.
- Emergency Shutdown System (ESD)
- Deck Crane (pedestal), All Pumps ⚠2
- Instrument & Utility gas system

- Sacrificial anode, Solar Electric power system, submarine cable,
- SSIV actuator △2
- Solar Panel and solar power controller △2
- Subsea umbilical, TUTA △2
- PLC-based safety and control systems △2
- Control valves, Shutdown valves, transmitters, gauges, etc. △2

The above list shall be considered as a minimum and shall be supplemented with other items based upon requirement indicated in respective functional specifications. The Contractor shall define factory Acceptance Testing Requirements as a part of all Purchase Requisitions. This requirement shall be submitted to the Company for approval prior to the award of a purchase order. The packages shall be tested with the ancillary equipment that is to be supplied with them.

Factory acceptance testing of instrumentation related equipment shall be as per functional specifications of the respective instrument items.

A Factory Acceptance Testing shall be conducted prior to dispatch from the Vendors works to determine that the assembled equipment meets the design requirements.

The Contractor shall submit a full Factory Acceptance Test procedure 6 weeks prior to the Factory Acceptance Test to detail the full extent of testing of the equipment. The testing procedure shall be approved by the Company prior to the commencement of testing and shall be complete with all equipment procedures, checklists and safety requirements to be taken. The Contractor shall be responsible for providing all necessary equipment and utility services to conduct the tests. The Contractor shall ensure that an opportunity is given to all relevant parties to attend all hold and witness points during Factory Acceptance Testing.

3.2 Minimum pre-commissioning activities to be carried out at yard

- Check systems conforming to the requirements of the P&IDs, drawings and datasheets.
- Leak Testing
- Internal Inspection of Vessels
- Inspection of strainers/filters, orifice plates and other piping specialties.
- Operability test of utility systems (except those which cannot be operated at the yard) Equipment shall be operated for a minimum of 4 hrs.
- System Flushing and Cleaning
- Operability test of pump and rotating equipment.

- Load test and operability test for crane.

Pre-commissioning activities related to instrumentation at yard shall be as follows:

1. Off line testing and calibration of instruments as reflected in P&IDs, safe charts and other project documents.
2. Installation and hook-up as per installation & hook-up drawing.
3. Hydro testing of impulse tubing and other associated tubing. Leak test of instrument isolation valves / manifolds.
4. On line testing and calibration checks of all instruments and loop checking of all such instruments.
5. Installation and hook-up of gas detector fusible plug, ESD/FSD stations etc.
6. ESD/FSD loop testing.
7. Functional test of well /fire shutdown panel inclusive of all related field devices, controls signals.
8. Functional test of gas detection system inclusive of all related field devices, controls signals.
9. Functional test of Telemetry Interface cabinet inclusive of all related field devices, controls signals.
10. Any other instrument related activity not listed above but mentioned in the relevant functional specifications elsewhere in the bid package.

3.3 Minimum activities to be carried out at offshore after installation and hook-up

- Calibration checks of instruments and loop checking. All the system/equipment including Vendor's packages and Company supplied equipment (if any) shall be included. Operability test of Fire water pump for 8 hours Operability test of other pumps for 4 hours
- Load test and operability test for Crane
- Charging of filter media, packing, lubes, chemicals etc.
- Repeat testing of PSVs
- System flushing
- System drying (Where applicable).
- System leak test. Water lines are also included.
- Emergency Shut down and Fire and Gas system. All such tests to be carried out at offshore after installation.
- Pre-Commissioning checks for Switch gear, MCC etc. as recommended by the manufacturer.
- Testing and checking of electrical equipment for proper earthing, continuity, insulation resistance. △2
- Post Installation CP Survey as per FS 4001. △2

3.4 Site Acceptance test (SAT) ⚠2

As a minimum Site Acceptance test shall be required on the following packages which has to be inspected by ONGC/ Certification Agency.

- HIPPS
- Process Control System
- F&G Detection system
- Subsea umbilical
- Well head shutdown panel & standalone shutdown panel
- SSIV Actuator & HPU
- PLC based system
- Deck crane (pedestral)
- Instrument & utility gas system

The above list shall be considered as a minimum and shall be supplemented with other items based upon requirement indicated in respective functional specifications.

3.5 Pre-commissioning of modification works

Contractor shall carry out modification works, interconnection and hook-up operation as given in Description of work in bid package. It shall be contractor's responsibility to carry out all necessary preparatory work like draining, venting, gas freeing, purging etc., for all the existing facilities required for modification and safe tie-in. It shall be contractor's responsibility to arrange and provide steam, chemicals, nitrogen etc. required for gas freeing operation. It shall be contractor's responsibility to ensure proper safety during tie-in / modification operation.

4. COMMISSIONING

Commissioning of the Well Platform by introducing well fluid shall not be in the scope of this present contract. However commissioning of equipment such as Crane(s), Portable DG set and DCP Skid shall be carried out along-with pre-commissioning of platform. Also contractor shall pre-commission all the instrumentation and control system by nitrogen gas. Further contractor shall be required to provide man-power assistance during commissioning and start of production by Company after completion of drilling of wells.

4.1 Shut down Requirements

During part of the Modifications Work and subsequent Pre-commissioning and Commissioning activities, some equipment in the existing process/ well platforms shall remain operational. The Contractor shall schedule all activities to minimize disruption to the production of existing platform and shall recognize that limitations will be placed on his access. The Contractor shall comply with all the permit and safety procedures of the existing platform.

The platform Operations Group will control the scheduling and duration of any shutdown of the platform. The contractor shall submit Shutdown Schedule to the Company for approval as part of the Pre-commissioning and Commissioning Procedure.

The shutdown schedule shall include the following as a minimum:

- A detailed list of all activities
- Estimated duration of each activity
- Float calculations for each activity
- Manpower Histogram for each shifts of the shutdown.

Contractor shall also provide any requests for services and access required e.g. requests for accommodation, access to utilities, crane usage requirements, deck area access requirements, permit requirements etc.
Contractor shall note that its use of Company's facilities is limited and the availability of these facilities cannot be assumed or assured (as is described elsewhere in the contract documents).

4.2 Purging and Cleaning Requirements

Contractor shall prepare procedures for all work on existing systems and submit them for approval before starting work. Before modifications work is carried out on any system, pipe work and equipment shall be prepared in accordance with approved procedures, gas freed and purged as appropriate and as required by Company.

Contractor shall arrange and supply nitrogen required for purging. The final oxygen content in process system shall be brought down to less than 2% (V/V).

The contractor shall develop procedures for the purging of systems prior to the introduction of hydrocarbons. Included in this procedure shall be the purging and gas freeing of existing lines of the platform requiring modification. This procedure shall include the proposed method of purging to be used, the duration of the purge, the purge medium and the

acceptance criteria used to determine a successful purge. This procedure shall be approved by the Company prior to the commencement of any works at the platform.

4.3 Preservation of Systems:

After completion of pre-commissioning and before handover of platforms, Contractor shall ensure the preservation of Equipment, systems, facilities etc., for 6 (six) months so as to the platform shall be ready for Commissioning / Start of Production soon after drilling of wells is completed. Piping shall be preserved by filling Nitrogen or Water as required. Preservation of equipment etc. shall be done as recommended by respective vendors.

5. HSE / RISK MANAGEMENT

Work onsite shall comply with ONGC's Health and Safety Manuals, Work Permit System and other relevant documents.

The HSE program during Project Hook-up & Commissioning shall focus on the following six (6) main areas:

1) Site Supervision
2) Personnel Awareness
3) Personnel Capability
4) Accident Prevention
5) Management involvement and visibility
6) Pre-Startup Assessment

5.1 Personnel Awareness

Briefing on safety expectations for Project Hook-up & Commissioning supervisory team and Contractor's personnel will be conducted prior to mobilization.

The briefs shall be immediately prior to mobilization. All personnel will again undergo briefing once they arrive at the work site for specific health, safety and security procedures.

The Contractor shall publish and disseminate his HSE manuals and programs to his supervisory and all other personnel prior to mobilization.

Daily tool-box meetings and Job Safety Analysis (JSA) shall be carried out to ensure personnel are aware of work to be performed and the risk, if any, associated with the days work and mitigate steps to take. The work group foreman shall lead the daily morning discussion prior to commencing with work. The Project Hook-up & Commissioning supervisors or discipline engineer or operations personnel shall periodically monitor and participate in the toolbox meeting.

5.2 Personnel Capability

All personnel involved in the Project Hook-up & Commissioning are required to attend mandatory safety training as required by ONGC as a minimum. Contractor's personnel, e.g. rigger / scaffolder, welder, crane operator, grinder, etc. shall undergo trade competence training as required.

Safety investigation training shall be provided for supervisory, inspection personnel for both Project Hook-up & Commissioning and Contractor to provide them knowledge in recognizing root causes of safety incidence and encourage them to be pro-active in safety matters.

5.3 Accident Prevention

Project Hook-up & Commissioning shall carry out inspection on construction tools and equipment prior to issuance to the Project Hook-up & Commissioning personnel to ensure they are fit for service. The inspection shall be done periodically.

Once the tools and equipment have been issued, inspection will be by the user, supervisor, safety officer and discipline inspectors, as appropriate.

All lifting equipment shall be tested, certified and assigned a color code signifying its certification period.

The Project Hook-up & Commissioning contractor shall screen its personnel prior to their employment to confirm that they are qualified for their assignment and are free from Drug & Alcohol (D&A) abuse. This shall be supplemented by random testing and testing for cause after mobilization.

Contractor Management will carry out safety audits on a regular basis.

Contractor shall implement a hazard identification program as part of daily routine.

ONGC Operation shall administer the work permitting procedure for simultaneous operations (SIMOPS) and simultaneous production & drilling (SIPROD) of Project Hook- up & Commissioning.

ONGC Operation shall administer the Emergency Response Plan (ERP). Project Hook-up

& commissioning group and its contractor shall formulate an ERP in-line with Operations established ERP procedures.

Contractor shall implement Job Safety Analysis (JSA) or Critical Work Analysis for engineered control of hazards on non-routine or critical activities with high hazard potential.

5.4 ONGC Supervisor's Responsibility

Publish the Project Hook-up & Commissioning Execution Plan after management endorsement and ensure its availability at work site.

Ensure that the Emergency Response Procedure (ERP) and Simultaneous Operations (SIMOPS), Health Safety Environment Management System and other safety documents are available at the Worksite.

Ensure that the Project Hook-up & Commissioning contractor assigns a safety engineer / officer full-time onsite to provide the supervisors with HSE advice.

Daily supervisory planning meeting shall be held between different groups, i.e. Operations, Drilling, Project Hook-up & Commissioning and their contractors. This meeting shall serve as a forum to provide the different groups the guidance to plan / modify each group's activity as necessary to avert any conflict or interference.

5.5 Management Involvement and Visibility

Onsite visits by ONGC management and contractor's management shall be conducted on a regular basis at least once a month. The timing of such visits can be planned that they coincide so that any pertinent HSE issues can be discussed together first hand.

5.6 Pre-Startup Assessment

A pre-startup assessment of the Facilities shall be performed prior to introduction of hydrocarbon into the system. The assessment is performed and documented to confirm that:

- Construction is in accordance with design specifications.
- Safety, environment, emergency, operations and maintenance procedures are in place and adequate.
- Risk management recommendations have been addressed and the required actions taken.
- Training of personnel has been accomplished.

6. GENERAL

6.1 Vendor's representatives

The Contractor shall arrange manufacturer's representative(s) (at fabrication yard and offshore) of at least the following major equipment/systems (as applicable as per Scope of Works) during operability tests, pre- commissioning and until the satisfactory completion of the Performance Tests. The period required to be on the platform shall be that needed by contractor and that required and approved by company.

- HIPPS system

- HPU System
- Instrument Air Compressor
- Crane(s)
- Shut down system
- Fire & Gas detection system
- Test separator
- MPFM system (MPFM, MPV, PLC, FCV etc.).
- Hybrid Solar Power System
- Chemical dosing system
- DCP Skid
- Portable DG Set
- IUG System
- SCADA System
- Hinge closure

The contractor shall reconfirm the schedule and duration (of vendor representative) three weeks prior to pre-commissioning, which shall be strictly complied. It is contractor's responsibility to retain vendor's representatives at site if job is not completed within the period indicated in the offer. Contractor shall inform the company about completion of job and shall take approval from the company before sending vendor's representative back from yard/ offshore.

6.2 Spares, Utilities etc.

The contractor shall be responsible for submission of list of one year operational spares. The contractor shall provide list of spares and responsible for initial fill up and six month supply of consumables (like lube oil, lubricants, etc.) for the platform operations after modification works are mechanically completed, pre- commissioned/ commissioned and handed over to the company. Contractor shall refer section 5.16 of 3.0 part II general condition of contract. △

All utilities required during pre-commissioning of the facilities including power, water, air, cranes, etc. shall be provided by the contractor. In no case the facilities provided on the platform shall be used for this purpose unless authorized by the company.

It shall be contractor's responsibility to supply lubes, chemicals, purging materials and other pre-commissioning aids required till the platform is handed over to the company.

It shall be contractor's responsibility to repair any damage to the system occurred during load out, transportation and installation and pre- commissioning of the facilities.

The contractor shall maintain a record of the start-up spares consumed during pre-commissioning and hand over the balance items to the company.

6.3 Handing over of Materials

After the mechanical completion and completion of pre-commissioning activities for all the systems installed on the platform by the contractor, the contractor shall hand over to the company all the materials which shall include but not limited to the following:

- All loose supply material
- Special tools and tackles
- Commissioning spares
- Spares as specified in relevant functional specifications

6.4 Special requirements

It shall be Contractor's responsibility to install, calibrate and make all laboratory and workshops equipment operable. Contractor shall involve Company's chemist and maintenance engineers and impart necessary techniques and know-how required for operation and maintenance of this equipment.

7. DOCUMENTS TO BE SUBMITTED

7.1 Operating manual

The Contractor shall prepare a draft start-up and Operating Manual for all of the facilities that are included in the Works and submit to Company at least 150 days prior to start of pre-commissioning activities for approval. Quantity of operating manuals requirement for all equipment shall be provided as per respective specification given elsewhere in bid package. The related attachments will go with each manual. The following information shall be included:

- Design basis
- Description of facilities
- Pre-commissioning check
- Start-up, normal operation & shut down procedures for each equipment.
- Platform start-up procedure.
- Platform normal operation procedure

- Platform shut down procedure (normal/emergency)
- Vendor instructions for all equipment for normal operation and trouble shooting.
- Emergency procedures.
- Operating parameters and set points of different alarms and trip devices
- Summary of chemical consumption including list of recommended Indian equivalent.
- Summary of utilities consumption for each equipment.
- Lubrication Schedule (include Indian equivalent, initial fill, frequency of change of lubricant and 6 months requirement).
- Gas detection and associated safety system operation, calibration and maintenance procedure.
- Life saving devices operation and maintenance procedure.
- Routine structural maintenance check.
- List of equipment (showing skid size, weight, purchase order no., vendor data book reference tag no.)
- Effluent disposal.

The manual shall have the following attachments as a minimum:

- Reduced size copies (275 mm x 425 mm) of line lists
- Equipment and instrument data sheets in accordance with purchase order
- Electrical Single line diagrams, area classification drawings and control schemes
- Pump characteristic curves
- Process Flow Diagrams (PFDs) & Piping and Instrumentation Drawings (P & IDs)
- Recommended proforma for recording routine parameters during normal operation for all equipment.
- Equipment layout.
- Safety escape routes
- Field location maps.
- Layout and location Maps for fire and safety equipments.
- <u>All hardware and schematic drawings of system packages like PCS, PLC-based ESD etc. shall be as-built.</u> △2

The contractor shall submit the draft Operating Manual to the Company for approval. The Contractor shall discuss the comments with Company & incorporate the comments in the final document. The Contractor shall submit the final document for approval to the Company. After the document is approved by the company/ engineer's representative, contractor shall make the required number of copies, specified elsewhere and submit to the company/ engineer's representative. This manual shall be followed during start-up and commissioning of the facilities. Vendor operating and maintenance manuals shall be submitted along with the final operating manual.

The operation manual can be divided into two or three parts if the thickness of manual exceeds 80 mm. It shall describe, pre-start up checks, start-up procedures, shut down

procedure and normal operation for an equipment vendor recommended procedure and integration of that equipment with other facilities. Contractor shall also submit 150 days before the commissioning the system operating Manual for the distributed control system (DCS), which shall contain system description, operating instructions and necessary information for the familiarization of the operator.

7.2 Pre-commissioning documents:

Contractor shall prepare detailed format of checklists of pre-commissioning and commissioning activities for each equipment/system. The Contractor shall submit the said format for approval of the Company. These check lists shall describe the checks/test to be carried out on each equipment/system, shall also indicate if a particular check/test is to be carried out at the yard or offshore.

All the check list points shall be dealt by the Contractor. Determination of the system readiness for commissioning shall be determined based on the relevant portion of check lists have been completed by the Contractor.

For the purpose of execution of these pre-commissioning activities, the entire platform shall be divided into system and sub-systems. The pre-commissioning document shall contain the following:

- System / sub-system identification.
- Detail procedures for the various pre-commissioning activities, such as system check, flushing, de-watering, drying, leak test, purging etc. with format to record the observations of the activities carried out.
- Procedures and formats for recording the operability test/performance test for different equipment/system.
- Lube schedule, indicating the nomenclature (Indian equivalent) of lubes, quantity of initial fills.
- Listing of commissioning and start up spares.
- List of pre-commissioning activities to be carried out at fabrication yard, or offshore, or at both places.
- High-pressure leak check procedure of gas system.
- A detailed procedure for management of any special bypass or defaults required for commissioning.

The Contractor shall submit a draft pre-commissioning documents 180 days before the activities are to be carried out. This should include the schedule for Yard Pre- commissioning and commissioning also to suit ONGC's key milestone target dates and scheduled mechanical completion dates. The document shall be reviewed by the Company. The Contractor shall submit a revised document after incorporating Company's comment for approval to the Company. The approved document shall be submitted 120 days prior to starting of the pre-commissioning activities.

At the end of pre-commissioning activities, all the pre-commissioning test records (duly signed) shall be compiled by the Contractor. Three copies of documents for each system shall be delivered to the Company.

7.3 Modification/hook up procedure

During part of the Modifications Work and subsequent Pre-commissioning and Commissioning activities, some equipments of the existing platform shall remain operating. The Contractor shall schedule all activities to minimize disruption to the Production of the existing platform and shall recognize that limitations will be placed on his access. The Contractor shall comply with all the permit and safety procedures of the platform.

Contractor shall produce a procedure with his detailed shut down requirements for the various hook-ups required to be carried out on the platform. This shall be presented to company for approval within 120 days of Notification of Award.

Contractor shall submit, along with Pre-commissioning procedure, a detailed procedure for carrying out modification works, interconnections and hook-up operations for the facilities. An Isolation scheme to be prior to carrying out modification works shall be worked out in advance and detailed in this document.

7.4 Commissioning procedure

Contractor shall prepare this document to detail out the procedures and sequence of commissioning of the project facilities including the log sheets for logging of parameters of different equipment / system during commissioning. The contractor shall have required inputs from the company and the vendor's representatives. The document shall include the shift rosters for the contractor/vendor's representative to be deployed during commissioning operation. This document shall be submitted to the company for approval, 120 days prior to the commencement of commissioning operation.

The Pre-commissioning and Commissioning Procedure shall be submitted to ONGC for approval.

For any system that is not possible to Pre-commission or Commission as full system, then partial Pre-commissioning shall be conducted (e.g. multi Module systems, Onsite systems that are connected to the Modules).

Once the system is reasonably complete and ready for Pre-commissioning or Commissioning, Contractor shall advise ONGC to proceed with the Pre-commissioning or Commissioning. A final joint line check with all parties shall be conducted and shall be collectively agreed that the system is ready for Pre-commissioning or Commissioning.

During the Pre-commissioning or Commissioning, all parties required to witness shall be available including Vendor Representatives and Operations Representatives.
The Commissioning Team will do full system Commissioning after Hook-up of all the Piping, Electrical, Instruments, etc. is completed.

After the Module are installed Onsite, partially Pre-commissioned systems will then be integrated and commissioned. The handing-over Document will then be signed-off by all parties to check the completeness of the whole system.

7.5 Other requirements

The Contractor shall provide safety equipment locations, H2S safety information chart, warning signs and escape route drawings (framed). These drawings must be placed in locations approved by the Company before the platform is commissioned. The Contractor shall also provide adequate numbers of NO SMOKING boards, which will be installed where required by the Company.

An emergency plan shall be prepared and shall be in place prior to commencement of Pre-commissioning and commissioning activities. The plan shall define the actions, personnel and facilities required in case of an emergency.

In addition to the other requirements of the Contract, Contractor shall supply adequate sets (A3 size) of Process & Instrument Drawings, electrical single line diagrams to the company to facilitate system check before start of hook-up work. The Contractor shall also provide two sets of PFDs on acrylic sheets which will be installed at locations specified by the Company.

7.6 Yard checkout before load out

Prior to load out, the Contractor shall carry out, at the yard, a check of the facilities for correct erection and installation, operability, maintenance requirement and safety of plant and personnel during operation in accordance with accepted international good engineering practices; this will be witnessed by the Company. The Contractor shall carry out all modifications and corrections in accordance with the final punch list prepared jointly by the Contractor and the Company.

7.7 Manpower for assistance during commissioning and start of production

The Contractor shall arrange & provide all categories of personnel i.e. shift engineers, operators, technician, chemist; safety engineer etc. required for manning the platform during commissioning and starts of production. For assistance during commissioning by Company and start of production of platforms, Contractor shall deploy vendor representatives for the following equipment's (as applicable as per scope of work). Vendor representatives shall be deployed for maximum 4 (four) days for each well platform as

required. Company shall provide one week advance notice for deployment of the vendor representatives.

ATTACHMENT - A

Pre-Commissioning Check List

1. PRE-COMMISSIONING CHECKLIST

This checklist represents the absolute minimum of work which has to be performed by the Contractor prior to commissioning of the facilities. It is not intended to be a complete list of activities required. Manufacturer's instructions for pre-commissioning checks/ testing shall be followed for all equipment.

1.1. General procedures

The general work procedures listed below outline the work to be performed by the Contractor. Other procedures applicable to specific system or items of equipment may be covered elsewhere in the contract.

1.2. Packing and seals

- Install mechanical seals, permanent packing and accessories wherever required.
- Adjust and replace mechanical seals, packing and accessories, as necessary, during pre - commissioning period.

1.3. Removal of temporary supports

Removal all temporary supports, bracing or other foreign objects that were installed in vessels, transformers, piping, rotating machinery or other equipment to prevent damage during shipping, storage and erection/ installation.

1.4. Alignment of rotating equipment

- Check rotating machinery for correct direction of rotation and for freedom of moving parts before connecting driver.
- Make cold alignment to the manufacturer's tolerances along with Company. Provide all the alignment readings records to Company. Contractor shall prepare the formats (unfilled) and submit to Company for approval.
- Check all lubricants and their quality, fill etc. before operating the equipment. Carry out uncoupled run of motors, check bearing temperatures, vibration, no load currents, over current trips, function of different safety devices and carry out adjustments as required.
- Make hot alignment and any dowelling required after equipment has been put in operation.
- Obtain manufacturer representative for equipments as required during installation and/or pre-commissioning and commissioning.

1.5. Tie-ins at unit limits

Prepare all systems for safe tie-ins with bridge connected platform or with existing operating systems. Contractor shall prepare the systems for Tie-ins in consultation with Company and will

be responsible for safety during tie-ins being made. Contractor shall gain approval of Company for the safety measures to be taken by them before any tie-in work is taken up.

1.6. System check / inspection

- Provide inspection facilities to the Company to check that erected facilities conform to Process & Instrumentation Diagrams, construction drawings, vendor drawings and specifications approved for construction.
- Verify and approve the facility check. Note exceptions, if any, on a separate work order list (punch list).

1.7. Site modifications

Carry out site modifications as found necessary during system checks and inspection from the viewpoint of routine operations, maintenance and safety of the platform. A list of such jobs shall be prepared by the Company and shall be handed over to the Contractor for execution.

1.8. Flushing

Perform flushing and blowing of all piping to remove dirt, welding slag, etc. Arrange for cleaning media (potable water or compressed dry air, as applicable) for carrying out flushing/blowing and disposal of the cleaning media in accordance with minimum procedures to be developed by the Contractor and approved by the Company.
Following is the minimum velocity of cleaning media to be maintained for flushing/blowing of piping:

AIR: 2.4 – 2.7 m/sec
WATER: 1 – 1.2 m/sec.

1.9. Temporary screens, strainers and blinds

- Provide and install temporary strainers where required. Install permanent strainers after initial operation.
- Clean strainers as required during pre-commissioning and commissioning.
- Provide, install and remove all blinds required for flushing or operation.
- Change gasket if necessary.

1.10. Leak tests

- <u>Leak test of complete process facilities including piping, equipment, instrument connections etc. to be carried out in accordance with ASME 13.3 latest addition after completion of pre-commissioning activities, safety checks and hydro test.</u> △2
- Notify the Company of test schedule at least two weeks in advance. All the tests are to be witnessed and the test record on satisfactory completion of the test be signed by Company.
- Provide 4 copies of all the test records to the Company.

- Provide any special media, if required for test purpose and provide facilities for disposal.
- Conduct all operational tightness testing.
- Carry out vacuum test to rectify any leakage

1.11. Safety devices

- Provide the Company with a list of proper settings for safety devices.
- Install all safety devices on the equipment.
- Test and adjust all safety devices such as PSVs, TSVs at offshore and seal wherever necessary. Other safety instruments/ instruments systems inclusive of field devices, Well / fire shutdown panel, gas detection system shall also be tested.

1.12. Purging

Install necessary purge connections and carry out system purging including that of flare and vent with Nitrogen in accordance with Company approved procedure. The final Oxygen content in purged systems shall be reduced to an approved safe limit. Contractor shall arrange & supply the Nitrogen required for purging.

1.13. Drying out

Dry out necessary facilities wherever required by Company.

1.14. Lubricants and chemicals

- Procure and supply initial fill of all lubricants, chemicals, resins, desiccants and other similar materials, replenish the chemicals consumed during pre- commissioning and commissioning.
- Inspect vessel interior along with Company representative/ certifying authority before filling of chemicals for proper cleanliness.

1.15. House keeping

Provide continuous clean-up of the construction and operational area. Remove excess materials, temporary facilities and scaffolding and pick up trash. Perform washing for further clean-up as required.

1.16. Equipment protection and spare parts

- Protect equipment from normal weather conditions, corrosion or damage before commissioning.
- Provide all installation and commissioning spares.
- Chemical Cleaning.

- Perform special chemical cleaning or pickling of the critical piping and compressor suction piping, etc. in accordance with vendors approved procedures.

1.17. Firefighting & lifesaving equipment

- Ensure correct installation of all firefighting and lifesaving equipment.
- Carry out function test of fire detection devices, foam and fire water spray system.
- Carry out Visual inspection of portable apparatus and ensure that these are installed at critical locations.
- Ensure that the escape drawings duly framed are installed at critical locations.

1.18. Miscellaneous

To carry out any other check/test as required by Company and provide all test certificate as required by the Company.

1.19. Operability test for a system/equipment

- The Contractor shall provide a procedure for carrying out the operability test of each equipment/system to prove that the equipment/system installed meet the design specification. This procedure shall include log sheets wherein the operating parameters shall be recorded hourly.
- Each system / equipment shall be subjected to an operability test to determine that it operates in accordance with its specifications and the design intent over the full range required by the Design Criteria. The operability test shall be conducted, using all ancillary equipment, auxiliaries and controls, continuously for the duration specified in these documents after stability conditions have been attained. If no duration is specified the test shall be conducted for 4 hours after stability has been attained. If the test is interrupted due to any reason, the test shall be started afresh.
- The operability test shall be carried out by the Contractor and the vendor's representatives, wherever applicable and witnessed by Company.
- The Contractor shall make necessary checks, adjustment, repairs required for normal operation of the system/equipment. All the safety devices shall be tested for their proper operation.
- Upon completion of the Operability test, the log sheet with all observation shall be signed by the Contractor, Vendor, Company representatives. The Performance shall be evaluated based on the data and observations made during the operability test. In case of any dispute, the decision of Company shall be final.