भारत सरकार
भाभा परमाणु अनुसंधान केंद्र
ट्रॉम्बे, मुंबई – 400085

Government of India
Bhabha Atomic Research Centre
Trombay, Mumbai – 400085

Research Reactor Facility EPC Package

‘Brief Scope of Work & Introduction’

Document No.: HFRR/00034/A/BSWI

June 26
Revision-R0

Page Intentionally Kept Blank

भाभा परमाणु अनुसंधान केंद्र स्वामित्व

इस दस्तावेज़ में गोपनीय और संरक्षित जानकारी है, और यह दस्तावेज़ भाभा परमाणु अनुसंधान केंद्र (बीएआरसी) की बौद्धिक संपदा है। इस दस्तावेज़ का कोई भी हिस्सा, जिसमें विशेष रूप से कोई संपादकीय तत्व, मौखिक और आलंकारिक चिह्न और छवियां के साथ शामिल हैं। इस दस्तावेज़ का किसी भी रूप में या अब तक ज्ञात या इसके बाद अनावेशित, इलेक्ट्रॉनिक, डिजिटल या यांत्रिक किसी भी माध्यम से पुन: प्रस्तुत या प्रसारित या उपयोग या प्रकाशित या संग्रहीत नहीं किया जाएगा। इस दस्तावेज़ को पूर्ण या अंशिक रूप से "भाभा परमाणु अनुसंधान केंद्र" की पूर्व लिखित अनुमति के बिना किसी भी व्यक्ति या इकाई द्वारा फोटोकॉपी, स्कैनिंग, रिकॉर्डिंग या किसी भी सूचना भंडारण या पुनर्प्राप्ति प्रणाली का उपयोग वांछित है। इस दस्तावेज़ का अनधिकृत उपयोग, खुलासा या नकल करना सख्त वर्जित है, और यह एक गैरकानूनी कार्य हो सकता है और इसके लिए संबंधित व्यक्ति या इकाई पर कानूनी कार्रवाई हो सकती है।

BARC PROPRIETARY

This document contains confidential and protected information and that the same are the intellectual property of Bhabha Atomic Research Centre (BARC). No part of this document including notably any editorial element, verbal and figurative marks and images including herein, shall be reproduced or transmitted or utilized or published or stored in any form or by any means now known or hereinafter invented, electronic, digital or mechanical, including photocopying, scanning, recording or by any information storage or retrieval system, without prior written permission from BARC, by any person or entity. Unauthorized use, disclosure or copying is strictly prohibited and may constitute unlawful act and can attract legal action.

Index

1.0 Introduction 9
1.1 Background 9
1.2 Project Objectives 9
1.3 Project Location 9
1.4 Project Description / Facility Overview 9
1.5 Purpose of this Document 9
2.0 Scope of EPC Contract 11
2.1 Detailed Design and Engineering 11
2.2 Procurement 12
2.3 Fabrication, Testing, and Pre-Assembly 12
2.4 Transportation, Storage and Logistics 12
2.5 Architectural, Civil and Structural Works 12
2.6 Mechanical, Electrical, and Instrumentation Installation 12
2.7 Integration of Critical Components 13
2.8 Testing, Commissioning, and Handover 13
2.9 Quality Assurance, Safety, and Compliance 13
2.10 Project Management 13
3.0 HFRR EPC Package: System-wise Module and Submodule Structure 13
4.0 Civil Works 16
4.1 Introduction 16
4.2 Block-wise Description and Functional Layout 20
4.2.1 Office Block (Block-A) 20
4.2.2 Entrance Block (Block-B) 20
4.2.3 Reactor Annex (Block-C) 20
4.2.4 G.T. Laboratory (Block-D) 20
4.2.5 Filter House and Compressor Room Block (Block-E) 20
4.2.6 Reactor Building (Block-F) 20
4.2.7 Service Block (Block-H & Block-H) 21
4.2.8 Ancillary Services 21
4.2.9 Shielding Requirements 21
4.2.10 Workshop & Stores Building 21
4.2.11 Lifts 22
4.3 Summary 22
5.0 Mechanical Works 22
5.1 Reactor Core Components 22

5.2 Beam Tube Assemblies, Inner/Outer Gates & Grillage 23
5.3 Pool Tanks & Leak Detection System 24
5.4 Shipping Casks, Shielded Doors & Compensation Blocks 25
5.5 Fueling Machine and Fuel Transfer System 25
5.6 Spent & Irradiation Assembly Transfer System (SIATS) 27
5.6.1 General Operating Sequence 27
5.6.2 Swing Arm Mechanism (SAM) 28
5.6.3 Pot Lifting Mechanism (PLM) 29
5.6.4 System Characteristics 30
5.7 Operation Trolley & Transfer Bridge 30
5.8 Radiation Shielding Window 30
5.9 Hot Cell Equipment 31
5.10 Material Handling Equipment 33
5.11 Control Rod Drive Mechanism Platform 35
5.12 Seal Doors & Air Locks (PAL & VAL) 35
5.13 Stainless Steel Tanks 39
5.14 Fuel Locking System 41
5.14.1 Introduction 41
5.14.2 Major Sub-assemblies 41
5.15 Ion Chamber/Fission Counter Housings & Lead Blocks 42
5.16 Service Pool Storage Cage 43
5.17 NTD Silicon Facility 45
5.18 EPs, Support Structures & Miscellaneous Pool Components 46
5.19 Irradiation Assemblies 46
5.20 Intermediate Storage Racks 47
5.21 Fuel Test Loop (FTL) Handling 47
5.21.1 Seal Plug 47
5.21.2 Tools for Seal Plug 48
5.21.3 Test Fuel Handling System (TFHS) 48
5.22 Reactor Building & Radiation Shielding Walls Embedded Penetrations 48
6.0 Process Systems 49
6.1 Primary Coolant System (PCW) 50
6.2 Heavy Water Reflector System (HWRS) 51
6.3 Helium Cover Gas System (HCGS) 51
6.4 Pool Cooling System (PCS) 52
6.5 Hot Water Layer (HWL) System 52

6.6 Secondary Cooling Water (SCW) System 52
6.7 Decay Heat Removal System (DHRS) 53
6.8 Waste Management System (WMS) 53
6.9 Beam tube and inner gate cooling system 53
6.10 Fuel Test Loop 54
6.11 Pneumatic Carrier Facility 54
6.12 Air Conditioning and Ventilation System 55
6.13 Service Water System 56
6.14 Reverse Osmosis Plant 56
6.15 Compressed Air System (CAS) 56
6.16 Chilled Water System (CWS) 56
6.17 Diesel Oil Storage and Transfer System (DOSATS) 57
6.18 Machinery Cooling Water (MCW) System 57
6.19 Fire Protection System (FPS) 57
7.0 Plant Electrical Supply System 58
8.0 Control & Instrumentation (C&I) 59
9.0 Establishing Workshops, Labs, Interiors and Furniture Supplies 61
10.0 Summary Notes on EPC Scope and Project Overview 62
11.0 Figures of HFRR 64
12.0 Tentative Bill of Quantities (BOQ) 78

Abbreviations

AOO: Anticipated Operational Occurrences.
BoQ: Bill of Quantity.
C&I: Control & Instrumentation.
CCL: Chemistry Control Lab.
EMTR: Emergency Transfer System.
HFZ: High Flux Zone.
LFZ: Low Flux Zone.
MCR: Main Control Room.
MFZ: Medium Flux Zone.
MTTR: Mean Time to Repair.
RHC-Lab: Radiation & Health Control Lab.
RPS: Reactor Protection System.
RRF: Research Reactor Facility.
SCR: Supplementary Control Room.
SCSIL: Shutdown Cooling System Interlock Logic.
SDS: Shut-Down System.

List of Figures

Figure-1: HFRR EPC Package Systems Division 14
Figure-2: HFRR Reactor Facility 17
Figure-3: HFRR Pool Block and Reactor Core Components..... 23
Figure-4: Schematic layout of Fuel Handling System (FHS) 26
Figure-5: Location of SAM, PLM and Hot cell Gripper..... 28
Figure-6: General arrangements of Conceptual design of PAL..... 38
Figure 7: General Arrangement of VAL 39
Figure-8: Isometric view of Storage Cage 44
Figure-9: Isometric view of HFRR Process Systems..... 50
Figure-10: Reactor Ground Floor level Plan of HFRR Facility (@ EL 101m)..... 64
Figure-11: HFRR Facility South-East Elevation and Section View..... 65
Figure 12: Typical Beam tube Assembly arrangment (Sectional Elevation)..... 66
Figure-13: Preliminary Sketch of General Arrangement of Reactor Pool Tank 67
Figure-14: Preliminary Sketch of General Arrangement of Service Pool Tank..... 68
Figure 15: Preliminary Sketch of General Arrangement of ITWT 69
Figure-16: General arrangementsn of Shield Doors..... 70
Figure-17: Reactor Trolleys and CRDM Platform at the top of the Reactor Pool Block 71
Figure-18: Flow sheets of Primary Coolant System (PCW) and Secondary Cooling Water System (SCW) 72
Figure-19: Flow sheets of Pool Cooling System (PCS)., Decay Heat Removal System, HW Reflector System, Hot Water Layer System, Helium Cover Gas System 73
Figure-20: Equipment & Piping Layout in the Reactor Building..... 74
Figure-21: Schematic of Reactor Building AC & VS Flowsheet..... 75
Figure-22: Indicative SLD of Plant Electrical Power Supply System 76
Figure 23: Overall I&C Architecture..... 77

1.0 Introduction

1.1 Background

Bhabha Atomic Research Centre (BARC) is expanding its scientific research on nuclear application and advanced research on radio-isotope production capabilities at BARC Vizag Site. As part of this expansion, a Research Reactor Facility (RRF) namely High Flux Research Reactor (HFRR) is being proposed to be constructed in Atchutapuram Mandal, Vishakhapatnam district, Andhra Pradesh. The RRF is envisioned as a state-of-the-art research facility that will support advanced nuclear research using cold neutrons in guide tube laboratory, neutron activation analysis, studies on radio-isotopes, and testing of materials for advanced reactors.

The project aims to strengthen India's nuclear research infrastructure and meet the growing demand for R&D in science & technology, neutron-irradiated materials for medical & biological applications, and neutron transmutation doped silicon for semiconductor applications.

1.2 Project Objectives

The primary objectives of the RRF project include:

- Establishing a 40 MW (reactor thermal power) open pool type research reactor with advanced capabilities in the field of nuclear science & technology.
- Providing facilities for R&D in beam tube research, neutron activation analysis and radioisotope production, material testing.

1.3 Project Location

The RRF facility is proposed to be located in Atchutapuram Mandal, Anakapalli District, near Vishakhapatnam, Andhra Pradesh, at the southeast of BARC Vizag site, with well-established access to existing infrastructure and utilities at BARC Vizag campus.

1.4 Project Description / Facility Overview

The proposed RRF is an open pool type research reactor, with reactor core located at the bottom of a light water-filled pool. The RRF has all the structures, systems and components required for safe operation of the plant along with advanced facilities for research nuclear science and technology.

1.5 Purpose of this Document

This document has been prepared to provide preliminary information of the project requirements for execution and it aims to:

- Offer an overview of the RRF project and its technical features.
- Understand the scope of work, site conditions, and key requirements.
- Enable to ascertain whether the prospective bidder possesses capabilities and interest to execute the project successfully.

The scope of EPC package is explained in clause 2.0. The preliminary description of the works envisaged for EPC contract includes the following:

- **Detailed design and engineering, procurement of materials and equipment, testing, manufacturing, construction, installation, erection, integration** of all structures, systems and components (SSCs) of RRF including the following:

  - **Civil and Structural Works**: Reactor building, auxiliary buildings & structures, and associated civil infrastructure.
  - **Mechanical Systems**: Reactor pool, tanks and auxiliaries, fuel handling systems, material handling equipment (MHE), shield and sealing doors, and other associated reactor mechanical systems.
  - **Process Systems**: Implementation of various process systems which include process piping, valves and equipment. The process systems are required for transport of nuclear heat and rejecting it to the environment. They also include various auxiliary systems, cooling water systems and other process-related facilities for reactor operation.
  - **Plant Electrical Systems**: Implementation of power distribution networks, standby/emergency power systems, and electrical auxiliaries.
  - **Control & Instrumentation (C&I) Systems**: Control systems, safety instrumentation, monitoring systems, interlock systems, various field instrumentation, control centre instrumentation for reactor operation.
  - **Air Conditioning & Ventilation Systems (AC & VS)**: Implementation of Reactor building ventilation, HEPA filtration, air conditioning, and environmental control systems to maintain safe and controlled conditions.

- **Commissioning** of each system and component of the RRF. Finally, **integrated commissioning** for all the research and operational facilities of the RRF.

The detailed EPC tender documents will be provided to the eligible bidders during raising of the EPC Tender. However, this document provides sufficient information for the EPC contractors to assess feasibility, resources, and preliminary timelines for executing the project by the contractor.

The contractor is also required to install and integrate various Free Issue Material (FIM) including certain reactor core components, C&I systems etc.

It may be noted that various SSCs of the RRF are important to nuclear safety and hence shall be qualified according to national and international nuclear safety codes, guides and standards.

2.0 Scope of EPC Contract

The execution of the Research Reactor Facility (RRF) shall be carried out under an Engineering, Procurement, and Construction (EPC) contract, wherein the EPC contractor will be fully responsible for the end-to-end delivery of the project, starting from detailed engineering, subsequent procurement, fabrication and installation, system commissioning and integrated commissioning of the facility and finally handing over the facility in an operational state to the Purchaser. The scope of work will encompass all the works related to civil, mechanical, process, electrical, control and instrumentation (C&I), Air conditioning & Ventilation and the establishment of laboratories, workshops, stores, etc. This includes, but is not limited to, design and detailed engineering, preparation of engineering documents, procurement of raw materials, manufacturing and fabrication, shop testing, supply, packing, transportation, site handling, storage, erection, construction, inspection, testing, painting, pre-commissioning checks, commissioning, trial operations, performance demonstration, and final handing over of all Structures, Systems, and Components (SSCs). The EPC contractor shall ensure that all works are executed in full compliance with the Purchaser's specifications, applicable codes, standards, and requirements, delivering the facility complete in all respects. Following subsections elaborate the responsibilities to be executed by the EPC contractor.

A tentative BOQ is also attached in Clause 12.0 of this document for the sole purpose to enable the bidder to assess the quantum of work involved. The BOQ shall be treated as tentative and is subject to change in the Stage-II tender as well as after the Contractor's Detail Engineering is completed.

2.1 Detailed Design and Engineering

- Develop detailed engineering designs based on the preliminary designs and requirements, guidelines provided by the Purchaser while adhering to the national and international codes, standards and guides.
- Design and engineering covering all disciplines including civil, structural, mechanical, process systems, electrical power supply, Control & Instrumentation (C&I), and Air Conditioning & Ventilation System (AC&VS).
- Prepare engineering & execution level drawings, specifications, calculations, and design reports for all the SSCs under the EPC scope.
- Integrate critical components supplied by the Purchaser (reactor core components, reactivity mechanisms, nuclear related specific C& I instrument, etc.) into the overall design of the RRF.

- Coordinate with the Purchaser for review and approval of key design deliverables including specific documents required for regulatory review.

2.2 Procurement

- Procure all materials, equipment, and systems required for the project, excluding FIM (free issue material) components which will be supplied by the Purchaser.
- Implement quality assurance and quality control for all procurement activities, including vendor selection, inspection, and certification as per the Code requirements and Purchaser's specifications.
- Ensure compliance with all Purchaser's specifications, applicable codes, standards, and regulatory requirements for all the facilities of the RRF.

2.3 Fabrication, Testing, and Pre-Assembly

- Fabricate structural, mechanical, process equipment/components, material handling equipment and auxiliary equipment/components within the EPC scope.
- Perform factory acceptance tests (FAT) for procured items/systems as per Purchaser's specifications and also perform site acceptance tests (SAT).
- Conduct pre-assembly or modular assembly where applicable to facilitate efficient on-site erection.

2.4 Transportation, Storage and Logistics

- Plan and execute safe transportation of all equipment, materials, and pre-fabricated assemblies to the project site.
- Manage storage, handling, and inventory at site in compliance with safety and quality requirements.

2.5 Architectural, Civil and Structural Works

- Construct reactor building, auxiliary facilities, and support infrastructure.
- Execute civil works including foundations, structural framing, floors, roofing, and road network within the reactor facility boundary and service areas.
- Complete architectural finishes as per Purchaser's specifications requirements.

2.6 Mechanical, Electrical, and Instrumentation Installation

- Erect all the mechanical systems including reactor pool and core components, process systems, cooling systems, air conditioning & ventilation, and other auxiliary systems.

- Install all electrical systems including power distribution, emergency power, lighting, grounding, etc.
- Install all instrumentation and control systems, ensuring proper integration with pre-supplied critical components.

2.7 Integration of Critical Components

- Receive and install core components, reactivity mechanisms, and other critical systems supplied by the Purchaser as FIM (Free Issue Material).
- Ensure proper alignment, integration, and interface with all other systems installed by the contractor.

2.8 Testing, Commissioning, and Handover

- Conduct pre-commissioning tests of individual and integrated systems.
- Support functional testing, performance verification, and safety validation.
- Assist in cold/hot commissioning of the facility.
- Handover the fully operational facility, along with as-built drawings, operation & maintenance manuals, history dockets, and quality assurance, testing, commissioning related all documentation.

2.9 Quality Assurance, Safety, and Compliance

- Implement a robust QA/QC program throughout the project lifecycle.
- Ensure compliance with all applicable nuclear safety, environmental, and regulatory standards.
- Maintain comprehensive records of inspections, tests, and certifications.

2.10 Project Management

- Prepare and maintain overall project schedules, progress monitoring, and reporting.
- Coordinate with the Purchaser on design approvals, inspections, and issue resolution.
- Identify, assess, and mitigate risks throughout project execution.

3.0 HFRR EPC Package: System-wise Module and Submodule Structure

For ease of understanding and execution of the HFRR Project under EPC mode, the overall scope of the Project has been systematically organized into various systems. The detailed design and engineering aspects of the Project are covered under seven

(7) Appendices, while the physical execution of the works is organized into seven (7) Modules.

Each Module represents a major system or functional area of the Project. Further, each Module is divided into Submodules, representing specific systems, equipment groups, or facilities forming part of the overall scope of work. This structured approach facilitates clarity in design, engineering, procurement, manufacturing, construction, installation, testing, and commissioning activities under the EPC contract.

The overall structure of the HFRR EPC Package, showing the grouping of various systems under different Modules and Appendices, is illustrated in Figure-1.

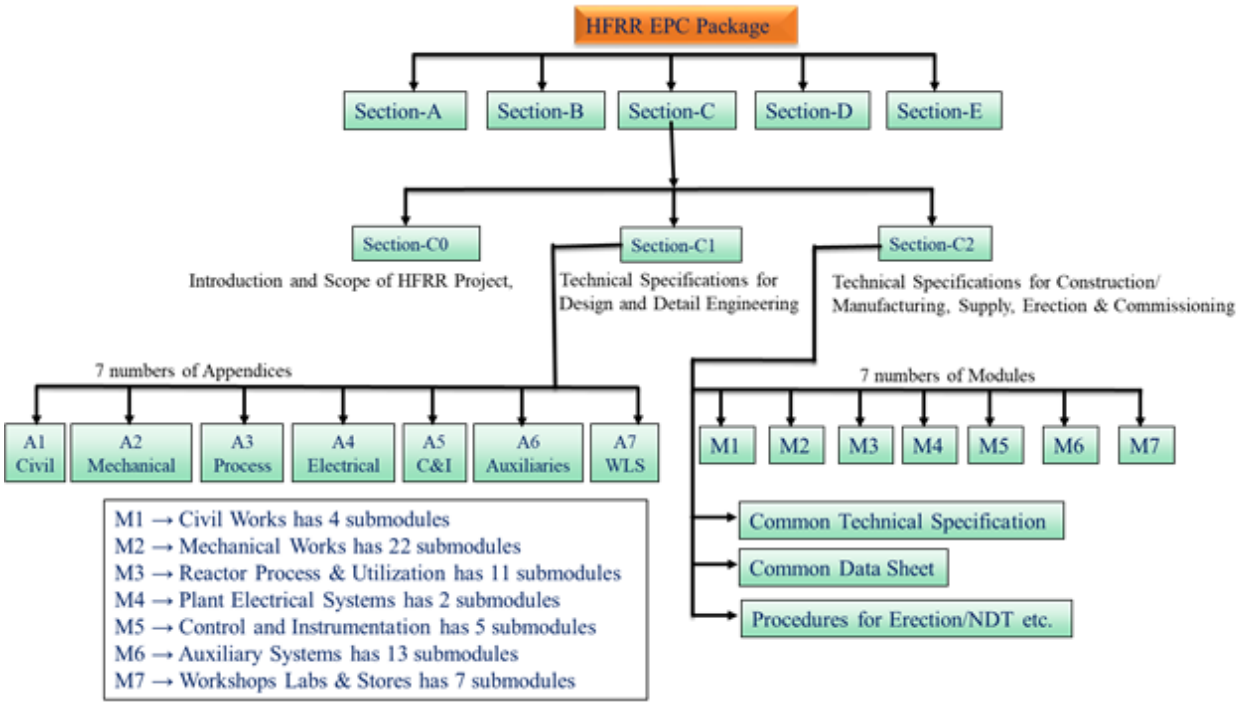

Figure-1: HFRR EPC Package Systems Division

The Modules and corresponding Submodules forming part of the HFRR EPC Package are listed in Table-1 below. The Submodules represent the various systems and facilities falling under each Module are shown in Table-1.

Table-1 Submodules of the Various Modules of HFRR

Sr. No.	Module	Name of Modules/Submodules
		Section-C2- Civil Works Module (M1)
1	M1-S1	Civil Works of Main Plant Structures
2	M1-S2	Technical Specifications for Civil Works for Miscellaneous Enabling Structures
3	M1-S3	Landscaping and Horticulture Works
4	M1-S4	Workshop, Canteen & Stores Building
	M2	**Section-C2- Mechanical Works Module (M2)**
5	M2-S1	Reactor Components

Sr. No.	Module	Name of Modules/Submodules
6	M2-S2	Beam Tube Assemblies, Inner/Outer Gates & Grillage
7	M2-S3	Pool Tanks, Leak Detection System & SS Liners
8	M2-S4	Shielded Casks Shielded Doors & Compensation Blocks`
9	M2-S5	Technical Specification for Fueling Machine and Fuel Transfer System
10	M2-S6	Spent and Irradiation Assembly Transfer System
11	M2-S7	Operation Trolley & Transfer Bridge
12	M2-S9	Radiation Shielding Window
13	M2-S10	Hot Cell Equipment
14	M2-S11	Material Handling Equipment
15	M2-S12	CRDM Platform
16	M2-S13	Sealing Doors and Air Locks (PAL & VAL)
17	M2-S14	Delay Tanks, Dump Tank, Storage Tank, Expansion Tank & Drain Tank
18	M2-S15	Fuel Locking System
19	M2-S16	Ion Chamber/Fission Counter Housings assembly & mechanisms and Lead Blocks
20	M2-S17	Service Pool Storage Racks
21	M2-S18	NTD Silicon Facility
22	M2-S19	Tech Spec for Fabrication, Inspection & Testing of Process Equipment and Piping
23	M2-S20	EPs, Support Structures and other Miscellaneous for component installation inside Pool Block.
24	M2-S21	Irradiation Assemblies
25	M2-S22	Technical Specification for Intermediate Storage Racks
26	M2-S23	Seal Plug Tools and Test Fuel Handling System of Fuel Test Loop (FTL)
27	M2-S25	Reactor Building & Radiation Shielding Walls Embedded Penetrations
	M3	**Section-C2 Reactor Process & Utilization Systems Module (M3)**
28	M3-S1	Primary Coolant System
29	M3-S2	Heavy Water Reflector System
30	M3-S3	Helium Cover Gas System
31	M3-S4	Pool Cooling System
32	M3-S5	Hot Water Layer System
33	M3-S6	Secondary Cooling Water System
34	M3-S7	Decay Heat Removal System
35	M3-S8	Waste Management System
36	M3-S9	Beam tube and inner gate cooling system
37	M3-S10	Fuel Test Loop
38	M3-S12	Pneumatic Carrier Facility
	M4	**Section-C2 Plant Electrical Works s Module (M4)**
39	M4-S1	Plant Electrical System
40	M4-S3	Technical Specifications for Execution of Plant Lifts & Elevators
	M5	**Section-C2 Control and Instrumentation Systems Module (M5)**
41	M5-S1	Process Instrumentation, Main & Supplementary Control Centers, Cabling, Tubing
42	M5-S2	Nuclear Instrumentation
43	M5-S3	Physical Protection Systems
44	M5-S4-1	Radiation Monitoring System
45	M5-S4-2	Beetle Monitoring System,
46	M5-S4-3	Plant Surveillance and Monitoring System
47	M5-S5	I & C of Reactivity Control Mechanism

Sr. No.	Module	Name of Modules/Submodules
48	M5-S6-1	Fire Alarm System
49	M5-S6-2	Public Address and Emergency Siren System
50	M5-S7	Plant Communication System
	M6	**Section-C2 Auxiliary Systems Module (M6)**
51	M6-S1	Reactor Building (RB) Air Conditioning and Ventilation System (AC&VS)
52	M6-S2	Control Room Building Air Conditioning and Ventilation System (AC&VS)
53	M6-S3	Filter House, GT Lab & Decontamination Building AC&VS
54	M6-S4	Service Building & Substation Air Conditioning & Ventilation System
55	M6-S5	Administrative Building Air Conditioning and Ventilation System
56	M6-S6	Service Water System
57	M6-S7	Machinery Cooling Water System
58	M6-S8	Compressed Air System
59	M6-S9	Fire Protection System
60	M6-S10	Chilled Water System
61	M6-S11	Reverse Osmosis Plant
62	M6-S12	Flow Test Station
63	M6-S13	Diesel Oil Storage and Transfer System
	M7	**Section-C2 Labs Workshops and Stores Module (M7)**
64	M7-S1	Mechanical Maintenance Workshop
65	M7-S2	Electrical Maintenance Workshop
66	M7-S3	Chemistry Control Lab (CCL)
67	M7-S4	Radiological Hazard Control (RHC) Labs
68	M7-S5	Furniture Supplies and Erection
69	M7-S8	Technical Specification for Erection, Commissioning of Labs & Workshop Equipment
70	M7-S9	Technical Specification for Workshop & Stores Material Handling Equipment

The brief description of the above Submodules is provided in the respective clauses explained subsequently, covering Civil Works, Mechanical Systems, Reactor Process & Utilization Systems, Electrical Systems, C&I Systems, Auxiliary Systems, and Labs, Workshops & Stores Modules.

4.0 Civil Works

4.1 Introduction

The Research Reactor Facility (RRF) is a state-of-the-art nuclear research infrastructure designed to support advanced research and development in the field of nuclear science and engineering. The facility integrates specialized reactor systems, experimental laboratories, and support services within a robust civil infrastructure. The preliminary layout of the facility has been carefully planned to ensure operational efficiency, safety, and ease of maintenance while adhering to stringent regulatory and design requirements for nuclear installations. The HFRR facility is shown in Figure-2.

The civil architectural plans of the research reactor facility at ground elevation is shown in Figure-10 along with major dimensions. Figure-11 shows the Elevation

and Sectional views of the facility. The RRF complex comprises of multiple blocks, each serving a specific functional requirement.

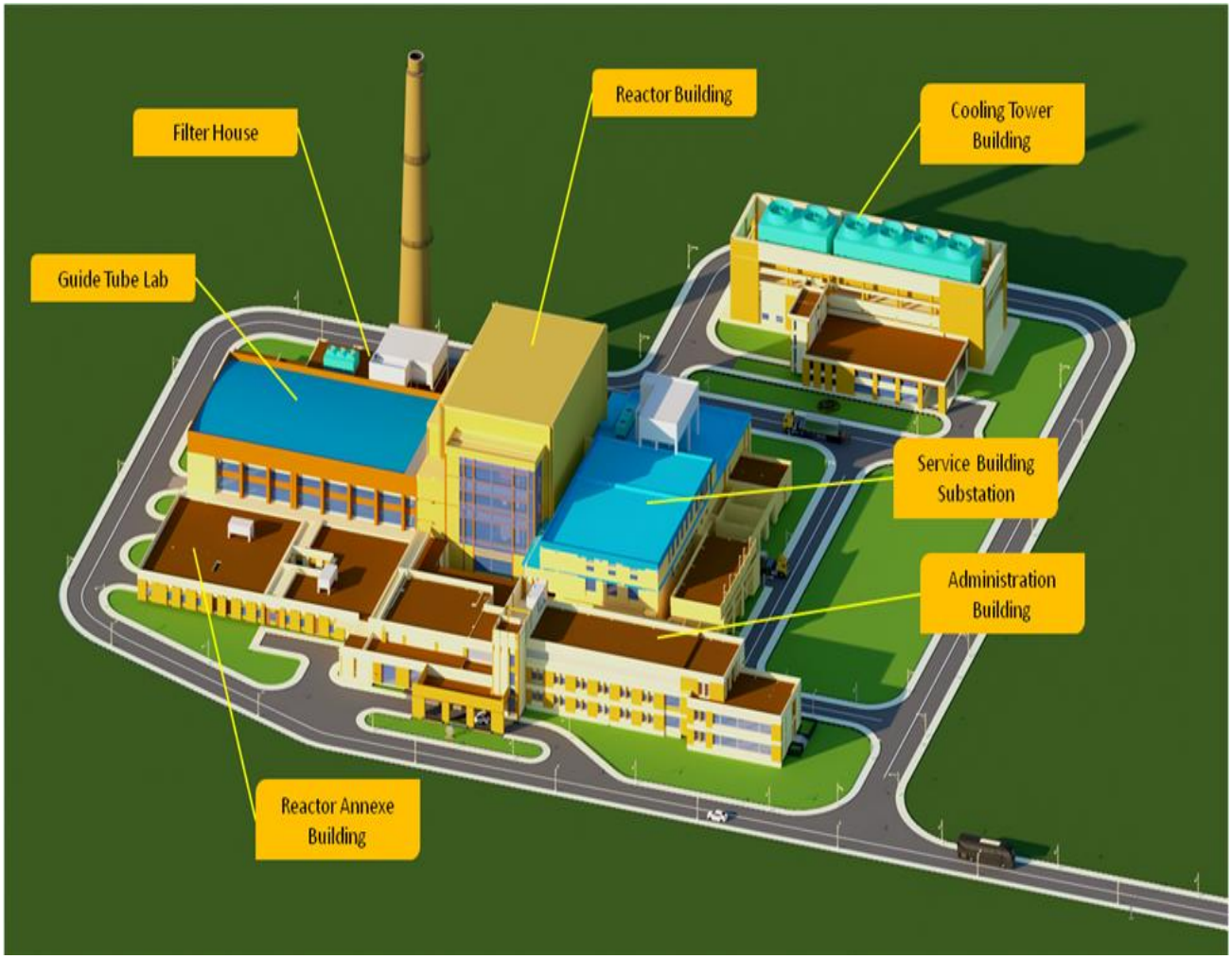

Figure-2: HFRR Reactor Facility

The approximate constructible floor area and the elevations of the various buildings (Block-A to Block-H) are mentioned in Table-2.

Table-2 Elevations and Floor Areas of the HFRR Buildings

Sr. No.	Building Name (Block)	Safety Category	Floor Area (m^2)	Floor Height (m)	Remark
1	Administration Building (Block - A)	NINS	Ground floor=1355	4.5	
			First floor=1355	4.5	
			Second floor=1020	4.5	
2	Auditorium Building (Block - B)	NINS	Ground floor=120	4.5	
			Ground floor=415	9.57	
			Ground floor=390	6.25	
			First floor=385	4.5	

Sr. No.	Building Name (Block)	Safety Category	Floor Area (m^2)	Floor Height (m)	Remark
			Second floor=205	4.5	
3	Annexe Building (Block - C)	NINS	Ground floor=2790	5.1	
4	Guide Tube Lab (Block - D)	NINS	Ground floor=2230	17.6	
		NINS	Ground floor=350	5.75	
5	Filter House (Block - E)	INS	Basement=730	5.7	
			Ground floor=625	4.5	
			Ground floor=525	11.3	
			Ground floor=305	5.85	
			Ground floor=315	8.5	
			First floor=620	6.8	
			Second floor=275	3.915	EWST
6	Reactor Building Block (F)	INS	Sub-basement=2060	6.3	
			Basement=2060	5.7	
			Ground floor=1070	31	High bay area
			Ground floor=390	9.45	Medium bay
			Ground floor=330	6	
			Ground floor=75	12	
			Ground floor=140	3.66	
			Ground floor=770	6.45	
			First floor=310	3.45	
			First floor=140	5.79	
			First floor=370	7.1	
			Second floor=390	4.5	Low bay area
			Second floor=310	4.5	
			Second floor=55	3.25	
			Third floor=310	6.4	
			Third floor=140	6.5	
			Third floor=390	6.4	Low bay area
			Third floor=330	18.3	High bay area
			Fourth floor=390	10.65	High bay area
			Fourth floor=310	4.8	
			Fourth floor=140	4	
			Fifth floor=55	3.05	
7	Service Building (Block - G)	INS	Basement=1610	5.7	
			Ground floor=190	6.075	
			Ground floor=180	5.7	

Sr. No.	Building Name (Block)	Safety Category	Floor Area (m^2)	Floor Height (m)	Remark
			Ground floor=1610	6	
			Ground floor=230	5.95	
			First floor=1750	4.5	
			Second floor=680	4.5	
			Third floor=260	3.915	EWST
8	Substation (BLOCK - H)	INS	Basement=1050	5.7	
			Ground floor=140	5.8	
			Ground Floor=190	5.375	
			Ground Floor=361	9	
			Ground Floor=100	5.8	
			Ground Floor=1070	6	
			Ground Floor=65	5.7	
			First Floor=1125	4.5	
			Second Floor=1125	4.45	
9	Stack (Stack Height is fixed and the diameters are tentative and it shall be decided based on the detailed engineering,)		Outer dia at bottom	8.5 m	
			Internal dia at bottom	7.1 m	
			Outer dia at top	2.8 m	
			Internal dia at top	2 m	
			Height from FGL	80 m	
*Finished surface Level is +100.0 m Elevation, which is at 12 m reference level at site.					
*INS = Important To Nuclear Safety					
*NINS = Not Important To Nuclear Safety					
*EWST = Emergency Water Storage Tank					

Table-3 Level wise Floor Areas of the HFRR Buildings

Sr. No.	Floor Name	Floor Area (Sq. M)
1	Sub-Basement	2060
2	Basement	5450
3	Ground Floor	16331
4	First Floor	6055
5	Second Floor	4060
6	Third Floor	1430
7	Fourth Floor	840
8	Fifth Floor	55

Note: The above values are tentative, actual values will be provided in the Architectural drawings in Stage-II of the tendering process.

4.2 Block-wise Description and Functional Layout

4.2.1 Office Block (Block-A)

The Office Block provides workspace for approximately 130 personnel, including administrative offices, a record room, a Personnel Protection System (PPS) room, a conference room, and a pantry. This block ensures efficient management and operational coordination of the facility.

4.2.2 Entrance Block (Block-B)

The Entrance Block serves as the main access point to the RRF. It accommodates an entrance lobby, security room, access control facilities, and a seminar hall to support administrative, training, and visitor interaction activities.

4.2.3 Reactor Annex (Block-C)

The Reactor Annex is a vital area housing essential operational and safety functions. It includes change rooms, vital area access control systems, the Health Physics Shift Room, Shift Charge Room, Shift Engineer Room, Plant Maintenance Room, and potential active research laboratories.

4.2.4 G.T. Laboratory (Block-D)

The G.T. Laboratory block accommodates neutron beam guide tubes with multiple stations for research applications, supporting research laboratories, and a compressor room. This block is designed to facilitate high-precision experimental work while maintaining stringent safety and operational standards.

4.2.5 Filter House and Compressor Room Block (Block-E)

This block supports reactor facility ventilation and radioactive area management. It includes exhaust blower systems, ion-exchange beds, sump tanks, an 80-meter-high stack, and compressor facilities. Proper ventilation and filtration are ensured to maintain safety and compliance with regulatory limits.

4.2.6 Reactor Building (Block-F)

The Reactor Building (RB), also referred to as the Reactor Hall, forms the central block of the RRF facility. It houses the reactor core, reflector systems, associated process systems, tray rod facilities, spent fuel storage bay, research areas, and the main control room. This building is the heart of the RRF, designed to ensure safe, reliable, and efficient operation of the reactor and its associated systems.

Major process systems are located within the RB. The outer containment structure is built using normal density concrete, while the equipment rooms, ceilings in the sub-basement and basement, and the reactor pool block are constructed with Heavy Density Concrete (HDC) of minimum 3.5 g/cc (dry condition).

4.2.7 Service Block (Block-H & Block-H)

The Service Block houses the electrical sub-station, including transformers, DG sets, panel rooms, and battery rooms. It also includes the chiller plant for reactor and sub-station ventilation systems and a supplementary control room. These systems ensure uninterrupted operation and environmental control for the facility.

4.2.8 Ancillary Services

Various ancillary services are provided to support the operations and logistics of the RRF. These include Diesel and Oil Storage Areas (DOSA), cable trenches, internal roads, storm water drains, equipment and material yards, scrap yard, official vehicle parking with driver rest facilities, and crane pads for heavy equipment handling.

4.2.9 Shielding Requirements

The reactor facility incorporates adequate shielding to ensure radiological safety of personnel, equipment, and the environment. Various walls are constructed using heavy density concrete, these walls serve as shielding walls.

Special care shall be exercised during construction of high-density concrete shielding walls, as these works demand precise material handling, batching, and placement practices to achieve the required density and homogeneity. Proper formwork design, vibration and compaction methods, and controlled curing practices are essential to prevent segregation, honeycombing, or voids that could compromise shielding effectiveness. In addition, attention shall be given to construction joints, penetrations, and embedded components to ensure integrity of all joints.

4.2.10 Workshop & Stores Building

The detailed design and engineering of the building will be provided by the Purchaser. However, the construction of the building shall be in the scope of the Contractor. The proposed facility has a floor plan of approximately 96 m × 32 m and is a G+2 floors structure with designated high-bay areas in the workshop and stores. A canteen facility will be accommodated above the stores area. The Contractor’s scope also includes the design engineering, supply, installation, and commissioning of material handling equipment, comprising one EOT crane and six monorails.

The complete execution of this structure, including construction, finishing works, installation of services/utilities as specified, and handing over in fully functional condition, shall be in the scope of the EPC contractor. The contractor shall be responsible for all construction activities in accordance with the approved drawings, specifications, and applicable codes/standards, ensuring quality, safety, and timely completion.

4.2.11 Lifts

The Research Reactor Facility (RRF) architectural block plans include provision of lifts to facilitate safe and efficient vertical movement of personnel, equipment, and materials within the reactor building and associated structures. The EPC contractor shall be responsible for the complete execution of lift systems as indicated in the block plans, including supply, installation, testing, and commissioning of lifts in accordance with the approved design, specifications, and statutory requirements. The lifts shall be designed for reliability, safety, and compliance with relevant codes and standards, ensuring smooth operation during both construction and operational phases of the facility.

4.3 Summary

The civil infrastructure of the RRF is designed to provide a safe, functional, and durable environment for the operation of a research reactor. All the blocks and their associated systems have been planned to meet operational requirements while ensuring compliance with regulatory, environmental, and safety standards. The integration of administrative, experimental labs, reactor, and service facilities within the RRF ensures efficient operation and long-term sustainability of the research activities.

5.0 Mechanical Works

The mechanical works consist of various mechanical systems and components as given hereunder.

5.1 Reactor Core Components

These components will be provided as Free Issue Material and will be erected by the EPC contractor. These include Plenum Structure of Stainless Steel (2.6 m Dia. and 3.2 m Height and 12 MT Weight), Reflector vessel of Aluminium alloy (3 m Dia., 2.1 m Height and 2 MT Weight), Core Chimney of Aluminium alloy & Stainless Steel (5 m width, 3 m height, 1.2 m deep and 2 MT Weight). The HFRR pool block and Reactor Core Components are shown in Figure-3.

5.2 Beam Tube Assemblies, Inner/Outer Gates & Grillage

In a research reactor facility, the beam tube assemblies serve as the primary structures for extracting and guiding neutron beams from the reactor core to various experimental stations located outside the biological shield. These beam tube assemblies (six numbers) are designed to ensure high neutron flux availability with minimum losses while maintaining structural integrity under radiation and thermal loads. Each of the six beam tube assemblies, weighing around 7-8 tonnes, is fabricated from carbon steel, SS-304 (Pool Portion) and Al-5052 materials to provide robustness and rigidity. The inner surfaces of tubes are precision-machined and the assemblies are permanently embedded in the reactor's biological concrete shielding, ensuring leak-tightness, structural stability, and effective shielding against radiation leakage.

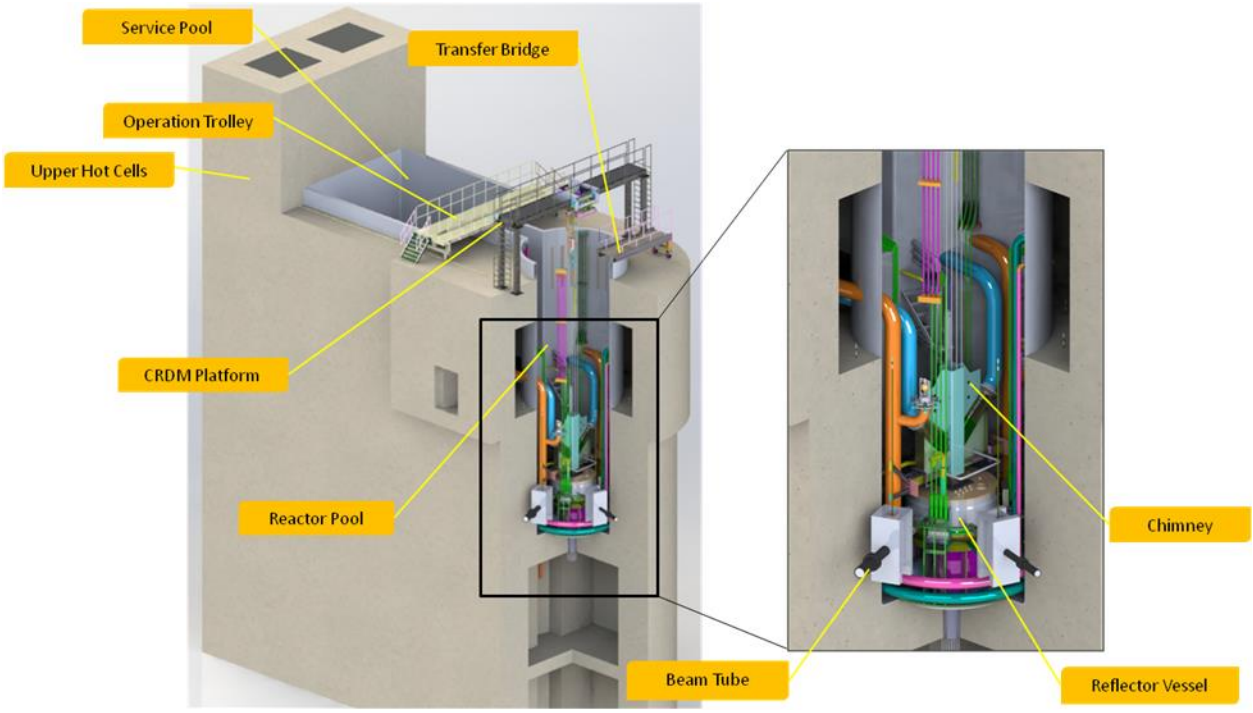

Figure-3: HFRR Pool Block and Reactor Core Components

To regulate and control the neutron beam, inner gate is provided in the embedded portion of each Beam Tube. These gates function as remotely operated neutron shutters or shield blocks, capable of opening and closing with high precision to allow or restrict neutron beam access to experimental facilities. The inner gates are inside the vertical chases embedded in the concrete on inner side of the biological shields. The shielding plugs made of high-density materials such as lead or iron and HDPE have been used, to attenuate radiation when Beam Tubes need to be closed. Each Beam Tube is blanked with the Sealing Plate at the Beam Tube end to maintain the pool integrity. The inner gate actuation systems employ mechanical drives operated by control panel designed for high reliability. Pool Portion of Beam Tube is fabricated from SS and Aluminium. SS portion

consist of nozzle, spool pipes, bellows and flanges while Aluminium pool portion consist of Al flange and Spool pipe blanked with the Al plate. Refer Figure 12 for Beam Tube Assembly, Inner Gate and Shield Plug.

To provide structural protection and prevent accidental mechanical damage to Beam Tubes (Pool portion), beam tube grillage is installed above the Beam Tubes inside the reactor pool. This grillage is fabricated from stainless steel (SS 304L). Its purpose is to safeguard the beam tubes (pool portion) against the inadvertent falling of any objects, from the pool top.

Erection support structure is also required to be fabricated for precise alignment of Beam Tubes embedded portion during erection and installation.

Collectively, the beam tube assemblies, gates, and grillage form an integrated system that not only enables safe and reliable extraction of neutron beams for experimental applications but also ensures robust shielding, mechanical protection, and operational flexibility within the research reactor environment.

5.3 Pool Tanks & Leak Detection System

Reactor Pool Tank, Transfer Canal, Service Pool Tank & ITWT form the open water bodies that house the reactor core, beam tube assemblies, and provide storage for spent fuel or experimental devices. These tanks serve the dual purpose of biological shielding and cooling, using demineralized water to attenuate radiation and remove heat.

The Reactor Pool Tank (Dia 5 m × 14.41 m total depth of RPT) and Service Pool Tank (8 m long × 6.6 m wide × 8.9 m depth) are typically pre-fabricated from stainless steel (SS 304L) plates & structural material/sections, to ensure corrosion resistance, weld integrity, and leak-tight performance. After fabrication under shop-controlled conditions, the tanks are embedded in reinforced concrete, which provides additional radiation shielding, structural stability, and seismic resistance. Stainless steel anchor studs or shear connectors integrate the tank walls with the concrete, accommodating stresses, strains and ensuring long service life.

An important feature provided for these tanks is the leak detection system, for pool water leakage monitoring from the tank weld joints. Each weld joint in the Pool Tanks is covered from the back side (concrete side) to channelize the leaked water to the beetle trays. Sensors such as conductivity probes or moisture detectors can quickly identify water ingress, allowing corrective action before significant loss occurs.

The Service Pool Tank, constructed with similar stainless steel–concrete embedment, provides shielded storage and handling space for irradiated samples or spent fuel. The transfer canal is a rectangular passage which connects Reactor Pool with Service Pool for movement of all types of (un) irradiated assemblies. Isotope Transfer Wet Tunnel (ITWT) connects service pool with Upper Hot Cells

(UHC) for transferring the irradiated assemblies from service pool to UHC. The general arrangement of the Pool Tanks is shown in Figure-13 to Figure 15.

This pre-fabricated and embedded design, combined with continuous leak monitoring, ensures reliable shielding, operational safety, and environmental protection in line with international nuclear safety practices.

5.4 Shipping Casks, Shielded Doors & Compensation Blocks

Shipping Cask is used for transporting the irradiated fuels. The shielded shipping cask is made of SS inner and outer casing and in-between filled with around 150mm thick lead. The casks shall be weighing around 8 tonnes (comprising of 5 ton lead and 3 ton stainless steel materials).

The shield doors are fabricated from carbon steel or combination of carbon steel and lead. There are around 25 numbers of shield doors provided in the RRF. The weights of these shield doors (including embedded frame structures) are in the range of 12 tonnes to 20 tonnes except the Delay tank room door and the IG Cell door, weighing around 40 tonnes and 30 tonnes (including embedded frame structures) respectively. These shield doors provide the access between radioactive and non-radioactive rooms. Refer BOQ clause for Quantity and sizes of Shielded doors.

Compensation blocks are thick plates required for compensating the loss of shielding due to trenches, pipes and fittings in the biological shield. The reduction in the concrete thickness shall be compensated by solid SS 304 plates or lead filled SS Box. Following are the type locations for compensation block:

Sr. No.	Location	MOC	Remarks
1	Heavy water pipeline niche in FLS room	SS 304 of 150 mm thickness	Removable type.
2	Beam tube Compensation Block	MS Blocks as per drawing	Fixed type
3	Horizontal Gate in hot cell	SS Box filled with pure lead (300 mm thickness)	Fixed type
4	Compensation block in hot cell	SS Box filled with pure lead (430 mm thickness)	Fixed type

5.5 Fueling Machine and Fuel Transfer System

The Fuelling Machine (FM) and Fuel Transfer System (FTS) form an integral part of reactor operation and fuel management. Together, they ensure safe, reliable, and efficient handling of fuel assemblies (FAs) and irradiation assemblies (IAs) between the reactor core, intermediate storage, and service pool. The systems

are designed with multiple redundancies, strict shielding provisions, and remote operability to guarantee operator safety and fuel integrity during all stages of handling.

The FM is responsible for transferring fuel assemblies from Reactor Core/ reflector thimble positions to the Intermediate Storage Rack (ISR) located in the reactor pool. The FTS acts as an interface between the reactor pool and the service pool, ensuring controlled transfer of fresh and spent assemblies while maintaining continuous shielding and cooling conditions. The MOC of the FM and FTS will be mainly SS 304L based material.

The schematic of the fuel handling system is shown Figure-4.

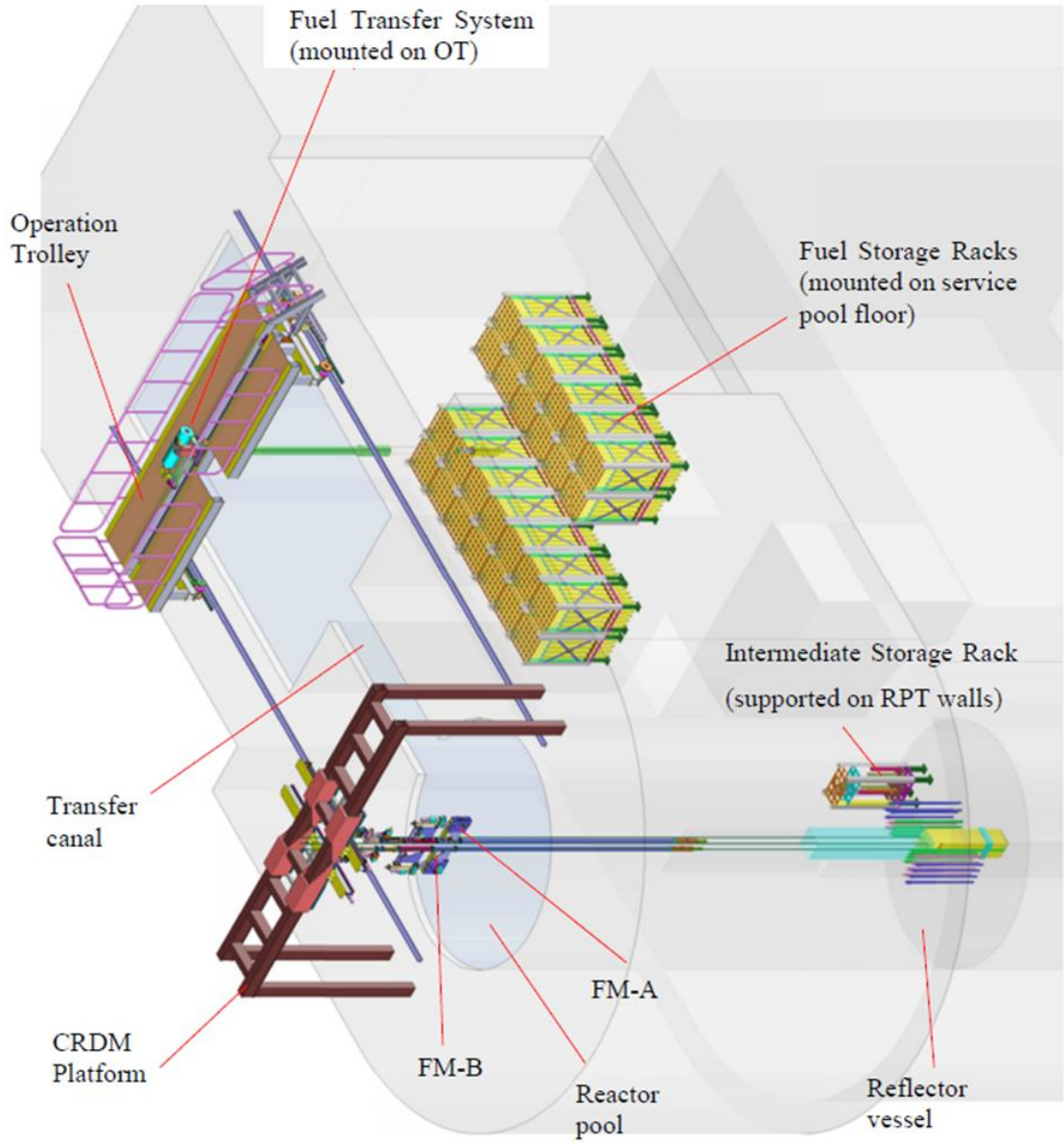

Figure-4: Schematic layout of Fuel Handling System (FHS)

Both FM and FTS are designed to meet stringent safety and reliability requirements. Key provisions include:

- Continuous submergence of assemblies to maintain cooling and shielding.
- Redundant drives, feedback devices, and wire ropes for safe handling.
- Remote operation capability, reducing operator exposure.
- Maintenance-friendly layout with all critical drives and gearboxes located above pool water.
- Gripper and hoist systems designed to comply with single-failure criteria
- The overall weight of the FTS will be around 1500 kg.

5.6 Spent & Irradiation Assembly Transfer System (SIATS)

The SIATS system includes high-precision mechanisms designed for the movement of spent fuel and irradiation assemblies within the reactor facility. These systems enable safe and reliable transfer between the reactor pool, service pool, storage racks, upper cell and shielded transport cask, while maintaining strict radiation safety standards. They are engineered to handle irradiated fuels and components under water, ensuring effective water shielding, controlled movement, and no radiation exposure to personnel.

The SIATS are constructed primarily from stainless steel SS 304L material to offer corrosion resistance, structural strength, and radiation tolerance suitable for long-term operation in reactor pool environments. Equipped with remote operation features, interlocks, and precise positioning mechanisms, the SIATS ensure accurate handling, operational safety, and compliance with nuclear standards, making them vital equipment under the EPC scope.

The Spent & Irradiation Assembly Transfer System (SIATS) is designed to transfer, and position Spent Assemblies (SAs) and Irradiation Assemblies (IAs) between the Service Pool, Upper Hot Cell (UHC), and Lower Hot Cell (LHC). SIATS follows a pot-in-pot transfer concept, ensuring isolation, shielding, and operational flexibility during isotope handling. It mainly comprises the Swing Arm Mechanism (SAM), the Pot Lifting Mechanism (PLM), hot-cell grippers, and parking stations inside UHC (Figure-5).

5.6.1 General Operating Sequence

The Fuel Transfer System (FTS) initially loads a SA/IA into the receiving pot of SAM located at the Service Pool receiving port. The SAM, immersed in pool water, rotates the pot horizontally through 140° and delivers it to the bottom of the wet transfer tunnel. At this position, the PLM engages with the pot and lifts it vertically through the tunnel to the UHC.

Inside the UHC, the PLM trolley is locked in position, and the in-cell crane with master–slave manipulators (MSM) grip the head of the SA/IA. The assembly is

then positioned into a wall-mounted parking station for storage and capsule replacement. For spent SA transfer, the crane lowers the gripped assembly through a transfer chute into the LHC, where it is loaded into a Fuel Transfer Cask mounted on a motorized trolley.

IAs undergo a bidirectional transfer cycle. They are brought into UHC for capsule replacement and then returned to the reactor via the same SAM-PLM system. In contrast, spent SAs follow a one-way path from the Service Pool to the LHC.

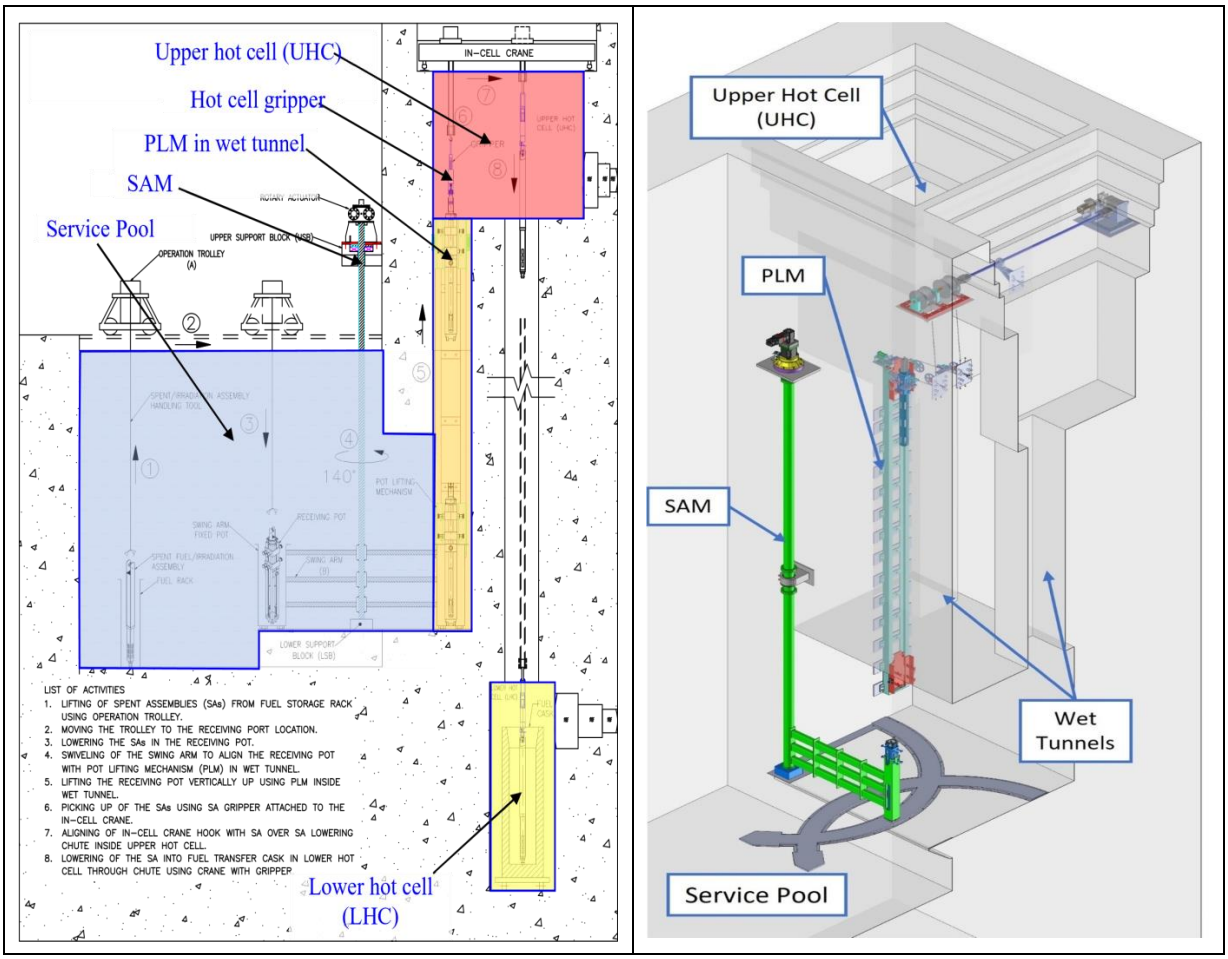

Figure-5: Location of SAM, PLM and Hot cell Gripper

5.6.2 Swing Arm Mechanism (SAM)

The SAM is a horizontally rotating arm assembly installed inside the Service Pool. Its function is to transfer SAs/IAs from the receiving port to the base of the wet tunnel and vice-versa. Since two UHCs are provided, two SAMs are installed, one serving each hot cell. Main Components of SAM are described below.

Receiving Pot (RP) and Liners: The removable RP holds assemblies during transfer. It accepts modular liners to accommodate various assembly cross-sections and ensure vertical positioning. Liners are stored in a dedicated rack

within the Service Pool. The RP is fabricated from SS304L, fitted with four trunnion pins for hoisting, guiding pins for stability, and drainage slots on its cylindrical wall.

Fixed Pot (FP) and Horizontal Offset Arms: The FP, welded to offset arms, houses the RP during rotation. To minimize deflection, the arm assembly is reinforced with hollow box sections and stiffening plates. Ball transfer units at the FP base reduce drag against the pool floor.

Vertical Shaft and Supports: A vertical shaft (~9–10.5 m long) connects the arms to the drive system. It is supported at the top by an Upper Support Block (USB) and guided at the bottom by a Lower Support Block (LSB).

USB and LSB: The USB, mounted on a steel end plate above the pool, carries a thrust bearing and connects to the geared servo drive. The LSB, positioned on a pedestal within the pool, contains a water-lubricated bearing that provides radial and axial guidance. The design allows removal of the shaft in case of replacement.

Prime Mover: SAM rotation is powered by a servo motor with gearbox, electromagnetic brake, and encoder feedback. An additional external encoder provides positional monitoring.

The SAM provides precise 140° to-and-fro motion, aligning the RP alternately with the receiving port in the Service Pool and the PLM at the wet tunnel base.

5.6.3 Pot Lifting Mechanism (PLM)

The PLM is a vertical hoisting system installed within the wet tunnel to lift assemblies between the Service Pool and UHC. Two PLMs are installed for each UHC to ensure operational redundancy. Main Components of PLM are described hereunder.

Pot Lifting Trolley: This trolley engages with the RP using four lifting lugs, each fitted with grooves designed to seat the RP trunnions securely. The geometry prevents lift-off under operating conditions. The trolley is mounted on stainless-steel ball bearings acting as drive wheels, supplemented by side wheels to prevent sway.

Guide Rails: Fixed along the wet tunnel wall with embedded plates, these rails ensure vertical alignment of the trolley during motion.

Hoisting System: A rope-pulley arrangement driven by a motor–gearbox assembly located in the operating gallery. The system is designed to be single-failure proof and easily maintainable since drives remain outside the pool water.

Locking and Sensing Systems: Pneumatic locks secure the trolley at its topmost UHC position during capsule loading/unloading. Wire-rope tension sensors detect

slackening or breakage, and limit switches prevent over-travel. Continuous position feedback is provided by encoders on the gearbox shaft.

During operation, once the SAM positions the RP at the tunnel base, the PLM trolley engages the RP via trunnions and lifts it 6–7 m to the UHC. After irradiation capsule operations, the PLM lowers the RP back to the tunnel base for return transfer.

5.6.4 System Characteristics

Safety and Reliability: Both RP and PLM are designed with redundant trunnions, dual rope monitoring, and locking features to meet single-failure criteria.

Ease of Maintenance: Major drives and gearboxes are located outside the pool or hot cell environment for accessibility.

Material Selection: All submerged components, including pots, shafts, and arms, are fabricated from SS304L for corrosion resistance and durability.

Operational Flexibility: Pot-in-pot design allows adaptation to multiple assembly geometries through modular liners.

5.7 Operation Trolley & Transfer Bridge

The operation trolley and transfer bridge are the two trolleys on the pool top, which facilitate handling & safe movement of irradiated assemblies, within the pool tanks. These trolleys provide controlled transport between the reactor pool and service pool, ensuring precise positioning and minimizing manual handling in radiation areas.

Fabricated primarily from stainless steel (SS 304L), each trolley is designed for robust and reliable operation. The combined weight of the trolleys is approximately 12 tonnes, including drive mechanisms. Equipped with manual control features, precision drives, and safety interlocks, the operation trolley and transfer bridge form an essential part of the irradiated assemblies handling infrastructure under the EPC scope.

5.8 Radiation Shielding Window

The Radiation Shielding Window (RSW) provides visual access to high-radiation areas such as the hot cells, or fuel handling zones, while protecting personnel from direct radiation exposure. The window serves as a transparent radiation barrier, enabling safe observation and monitoring of reactor operations and material handling.

Materials of Construction (MOC):

- **Primary Shielding Material (Free Issue Material)**: Lead glass or borosilicate glass with embedded high-density elements (e.g., barium, lead, or cadmium) to attenuate gamma and X-ray radiation.
- **Supporting Frame:** Stainless steel (SS 304 L) or mild steel with corrosion-resistant coating for structural integrity and radiation tolerance.
- **Seals and Gaskets (Free Issue Material):** Neoprene or silicone-based radiation-resistant elastomers for airtight sealing.
- **Additional Shielding:** Lead or tungsten plates, if required around the periphery to minimize radiation streaming.

There are four numbers of radiation shielding windows required for RRF, two for Upper Hot Cells and two for Lower Hot Cell.

5.9 Hot Cell Equipment

There are two hot cells provided at the reactor pool top called Upper Hot Cells. A hot cell called lower hot cell is provided at the ground floor beneath the Upper Hot Cells. Hot cells are heavily shielded and enclosed areas designed to safely handle highly radioactive materials for experiments, post-irradiation examination, or sample processing. The hot cell equipment ensures safe transfer, manipulation, and storage of radioactive materials while providing radiation protection to personnel. Typical hot cell equipment includes:

Hot-cell trolleys:

Hot-cell trolleys are used to transport radioactive materials to and from Upper hot cells & Lower hot cell to the outside of hot cells. These are made of steel, remote-controlled or manually operated under strict radiation protocols. The MOC for **Structural frame**: Stainless steel or carbon steel, **Wheels/rollers**: CS. **Operation:** LHC Trolley is RRC controlled & UHC trolleys are manual.

Horizontal gates:

Gates serve as shield access points to insert or remove samples and equipment without compromising radiation containment. Sliding gates with interlocking mechanisms are provided for safety. The MOC of Gate body: SS/CS, Shielding: Lead.

In-cell cranes:

One In-cell crane with single failure proof design is provided in each Upper Hot Cells i.e. two numbers of In-cell cranes are required for lifting, lowering, and manoeuvring radioactive samples or equipment inside the hot cell. These have features of Remote operation, additional manual operation in X, Y, Z motion, precise control, overload protection, radiation-hardened motors, and wiring. The In-cell cranes are used to transfer the assemblies (SWL- 1 ton) within the Upper Hot Cell and also to transfer the assemblies from Upper Hot Cells to lower hot cell. The MOC of **Crane frame**: SS/CS; **Hooks and lifting components**: SS or

high-strength steel with lead shielding; **Cables**: Radiation-resistant coatings or PTFE-insulated wires.

LHC Monorail:

A monorail is required in the Lower Hot cell for manoeuvring of items in the LHC. It shall have SWL of 2 Ton. It shall be operable from remote pendant and shall also have provision of manual operation over and shall be made up of SS/CS with hook of high strength steel and radiation resistant cable.

Racks:

The function of racks is to store radioactive samples safely within the hot cell while ensuring minimal radiation streaming. The features are Modular design, adjustable shelves, shielding considerations, and corrosion resistance. The MOC is SS based material.

Lowering mechanisms (manipulators or elevators):

It precisely lowers samples or fuels from upper hot cells to lower hot cells into shielded casks. The features are Remote-controlled, with fail-safe interlocks to prevent accidental drops. The MOC: for load-carrying components SS or high-strength steel, Cable/chain systems SS hardened alloys, Control systems: Shielded electronics with remote operation capability.

Removable blocks:

The removable blocks on top of the **Upper Hot Cells** are made of **high-density concrete**, designed to serve as shielding against radiation during normal operations. These blocks are modular and removable, enabling access from the top of the hot cells for installation, maintenance, or replacement of large equipment and handling of irradiated components that cannot be introduced through smaller ports. Their construction ensures both **adequate radiation protection** and **operational flexibility** for the facility.

Additional Considerations for Hot cell equipment:

Shielding: All equipment must be designed to minimize radiation streaming, often requiring layered shielding (lead + stainless steel + concrete).

Decontamination: Materials selected must resist chemical and radiation-induced corrosion to allow routine cleaning and decontamination.

Thermal resistance: Sometimes hot cells may operate at elevated temperatures (30-50^{0}C) due to radioactive decay. MOC must withstand thermal stresses.

Longevity & maintenance: Stainless steels, radiation-resistant polymers, and lead/tungsten composites ensure prolonged service life and minimal replacement under high-radiation exposure.

5.10 Material Handling Equipment

A range of material handling systems Equipment will be provided across the reactor facility to ensure safe and efficient movement of equipment, components, and materials during installation, operation, and maintenance. These include Electric Overhead Travelling (EOT) cranes, manual and electrically operated monorails, and underslung cranes, strategically located in the reactor building reactor hall, GT laboratory, substation buildings, electrical substation areas, filter house, DG Building, Service Building, Helium Compressor Room, & Cooling Tower Building. Reactor building & Filter House EOT cranes (30Te & 12Te respectively) are working on single failure proof criteria.

All handling systems are designed with appropriate load capacities, safety interlocks, and ease of operation, using robust stainless steel or structural steel construction with corrosion-resistant finishes. These provisions ensure reliable lifting, precise positioning, and safe transfer of loads under nuclear facility operating conditions, forming an essential part of the EPC scope. The list of likely MHE along with capacity and type is as explained in BOQ clause.

Table 4: Tentative List of Overhead Cranes

Sr. No.	MHE	Type	Capacity	Span	Lift
1	Reactor Building EOT	Single Failure Proof Double girder EOT crane	30/5 Ton, 10 Ton Monorail below each Bridge Girder	28 m	35 m
2	Filter House EOT	Single Failure Proof Double girder EOT crane	12 Ton	17.1 m	>10.8 m
3	GT Lab EOT	Double Girder EOT crane	10 Ton	32.0 m	>10 m
4	Service Building EOT	Double Girder EOT crane	5 Ton	11.10 m	15.8 m
5	RB Researcher's Area Crane	Electrically Operated Underslung Crane	10 Ton	9.0 m	>5.2 m
6	RB Equipment Hatch Crane	Electrically Operated Underslung Crane	5 Ton	7.5 m	>3.1 m

Table 5: Tentative List of Monorail Hoist

Sr. No.	Location	Capacity (Ton)	Qty.	Lift (m)
	Reactor Building Ground Floor & IG Cell Area			
1	FTL Hatch Area	5	1	3.8
2	Guide Tube Cave	2	2	3.1
3	IG Cell Area	1.5	1	3.75
	Reactor Building Basement Area			
1	FTL Room 1	2	2	3.95
2	FTL Room 2	2	2	3.95
3	S/D Pool Cooling Room	2	1	3.95
4	Cover Gas Sys. Area	1	1	3.95
5	PCW Aux. Pump Rooms	2	2 (combined for two rooms)	3.95
6	Hoist in Fc Room	3	1	4.35
	Reactor Building Sub-Basement Area			
1	Pool Cooling Sys. Room	2	2	4.55
2	HWL Sys. Room	2	1	4.55
3	CLOE Loop Room	2	1	4.55
4	HW Drain Pump Room	2	1	4.55
5	Reflector Coolant Sys Room	2	2	4.55
6	HW Dump Tank Room	2	1	2.7
	Filter House Basement			
1	PCW purification Pump Room	1.5	1	4.0
2	Effluent Pump Area	2	2	4.55
	Filter House Ground Floor			
1	Trench Area	5	2	2.5
	Filter House First Floor & He Compressor Room			
1	First Floor: Fan Area	1.5	4	5
2	Mezzanine Floor Area	2	1	9.3
3	He Compressor Area	10	1	6.2

Sr. No.	Location	Capacity (Ton)	Qty.	Lift (m)
	Service Building Basement Area			
1	Basement Area	2	2	3.45
	Service Building Top Floor Area			
1	Top Floor	2	1	12.8
	Cooling Tower Building			
1	SCW Pump Area	5	2	5.45
2	Service Water Pump Area	2	1	8.5
3	DG Room	10	3	6.2

5.11 Control Rod Drive Mechanism Platform

The Control Rod Drive Mechanism (CRDM) Platform is a critical structural assembly positioned above the reactor pool, designed to support the operation and maintenance of seven control rods and their drive mechanisms. Centrally located over the reactor core, the platform spans 9.2 meters in length and 1.2 meters in width, and is elevated 3.5 meters above the reactor pool top. It is supported by two steel columns anchored to the reactor pool block on diametrically opposite sides.

Constructed with Stainless Steel and topped with aluminium chequered plates for safe personnel access, the platform accommodates essential reactor control element components including SORs, CSRs, FCRs, and their extension rods.

The platform is structurally designed to support the fuelling machine (approx. 2 Te) and maintain a minimum 1.65 m clearance for safe operation beneath it. Handrails (1.2 m high) and toe guards (150 mm high) ensure personnel safety, while non-continuous railing near the FTL hole allows tool passage. All surfaces are finished smooth to minimize radioactive contamination risks and facilitate easy decontamination.

It plays a key role in ensuring safe, efficient control rod operations and fuel handling in the reactor environment. Seismically qualified rigid structure and deflection-controlled design criteria are to be incorporated. The approximate weight of the CRDM platform will be around 5500 kg.

5.12 Seal Doors & Air Locks (PAL & VAL)

In nuclear facilities, maintaining containment integrity and radiation safety is paramount. To ensure controlled and safe access to critical zones like the Fuel Clamp Room and Reactor Containment, etc. specialized sealing systems are

provided in the form of Seal Doors, Personal Air Locks (PALs), and Vehicle Air Locks (VALs).

1. Seal Doors

Seal doors are provided to form a leak-tight boundary for the Fuel Clamp Room, especially in the unlikely event of water flooding in Fuel Locking System (FLS) room. This door serves as critical enclosures that prevent the spread of potential contamination and preserve the safety envelope. This is fabricated from carbon steel (CS) materials and include peripheral sealing systems that ensure airtight and watertight integrity under both normal and off-normal conditions. The robust design minimizes leakage and supports pool block safety requirements. The seal door clear opening is 1.2 m wide and 2.2 m height. According to the clear opening the dimensions of the sealing door and the door frame (embedded in the concrete) will be decided.

2. Pool Isolation Gates

Two numbers (quantity 2 nos.) of Pool Isolation Gates provide sealing in the Transfer Canal for isolating the Reactor Pool from Service Pool. The pool water seal from Service Pool side shall be achieved by inflatable seal (EPDM) provided in the Pool Isolation Gates. Each gate shall consist of two inflatable seal gaskets. The MOC for Pool Isolation Gates shall be plates/bars/sections of SS 304L. The tentative overall height of Gate is 6.7m and width of 1.2 m. Tentative weight of each Pool Isolation Gate is 1.7 Tonne.

3. Personal Air Locks (PALs)

Personal Air Locks are provided to allow manual personnel access into the Reactor Containment Building while ensuring that the containment remains sealed from external environments during reactor operation. A total of four (4) PALs is planned in the Reactor Facilities (RRF) area. Each PAL has a box chamber of RCC and at both ends two similar types of air tight doors are provided, the sketch of door is shown in Figure-6. The PAL doors are hinged with the embedded frame and opens by hinge rotation. The PAL door's clear opening is 1.3 m wide x 2.2 m height. According to the clear opening, the dimensions of the sealing door and the door frame (embedded in the concrete) will be decided. The approximate weight of each door of PAL along with embedded door frames will be approx. 2Te including all mechanisms and the MOC will be carbon steel-based material (IS-2062 Gr E 250). The PALs consist of box type steel door with sealing arrangement for making containment air tight. PAL has instrumented operating mechanisms (pneumatic/electrical) and interlocks as per the requirements. The general arrangement of conceptual design of the PAL is explained in Figure-6.

Major features of PAL :

- Each PAL comprises two interlocked doors arranged in a sequential operating mode.
- Only one door opens at a time to prevent direct passage between the containment interior and the external environment.
- When the first door is closed, the second door is unlocked to allow safe personnel entry or exit.
- This airlock mechanism ensures that containment integrity is not compromised during personnel movement.
- It is provided with manual over-ride feature for operating the door.

PAL doors are designed as rectangular closures with high-integrity sealing gaskets around the periphery to provide air-tight sealing and comply with nuclear safety norms.

4. Vehicle Air Locks (VALs)

Vehicle Air Locks serve the same containment-preserving function as PALs but are designed for vehicle or equipment access. They are especially used during installation, maintenance, or refuelling activities that require the transport of larger components into or out of containment. The VAL has a box chamber of RCC and at both ends of the box two similar types of seal tight doors are provided which opens by sliding. The VAL door's clear opening is 4.5 m wide and 5 m height outer door and 4.5 m x 4.5 m inner door. According to the clear opening, the dimensions of the VAL door and the door frame (embedded in the concrete) will be decided. The approximate weight of the pair of each VAL doors along with embedded door frames will be around 10 tons and the MOC will be carbon steel-based material (IS-2062 Gr E 250).

- VALs also operate using an interlocked dual-door system:
- Only one door is permitted to open at a time.
- The system ensures that the containment remains sealed even during vehicle entry or exit.
- Like PALs, VAL doors are rectangular with sealed perimeters and built to withstand operational and accident conditions.

Both PALs and VALs play an essential role in maintaining the containment boundary, offering controlled, safe access without compromising radiological safety or pressure boundary requirements. The general arrangement of drawing of VAL are explained in Figure 7.

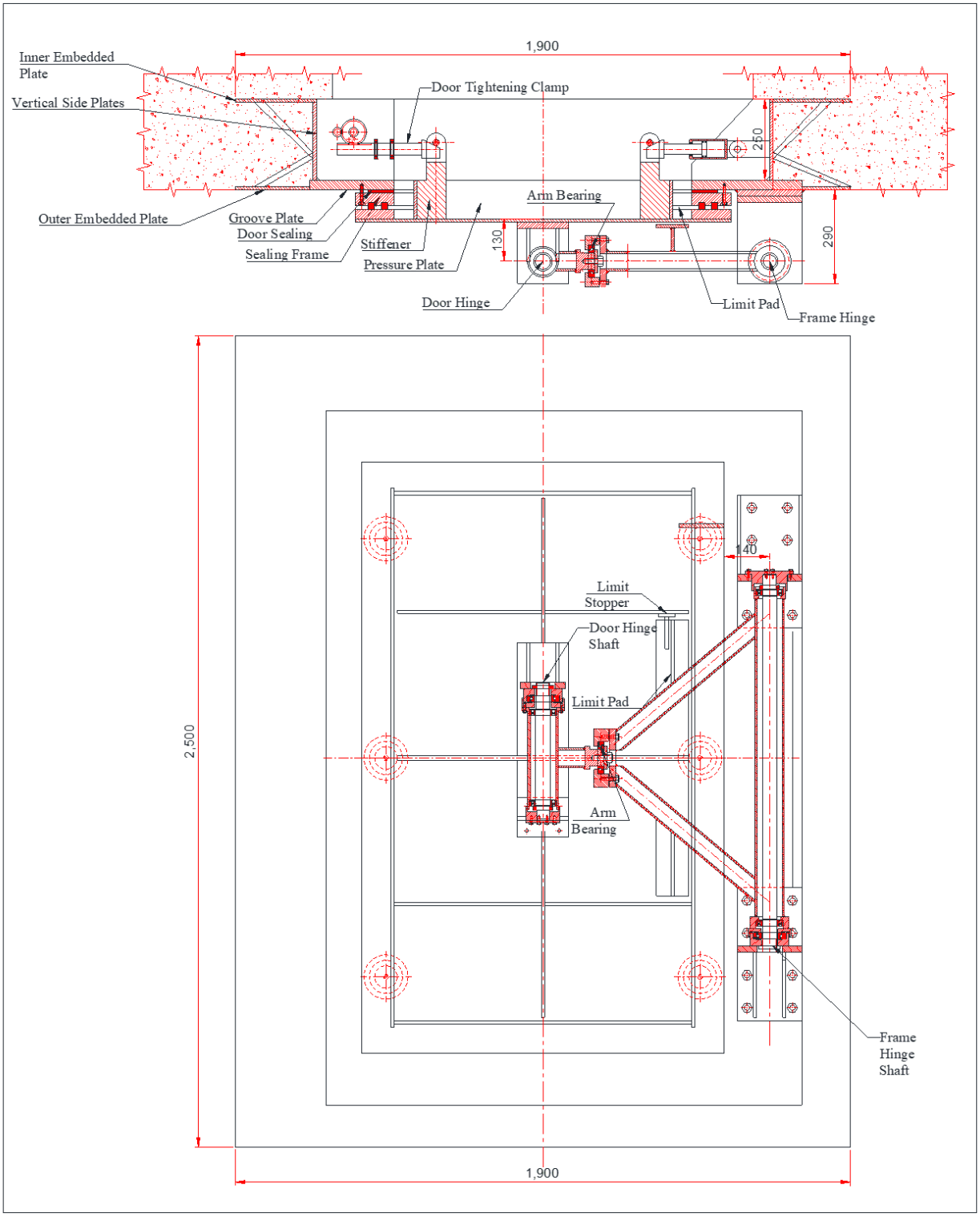

Figure-6: General arrangements of Conceptual design of PAL

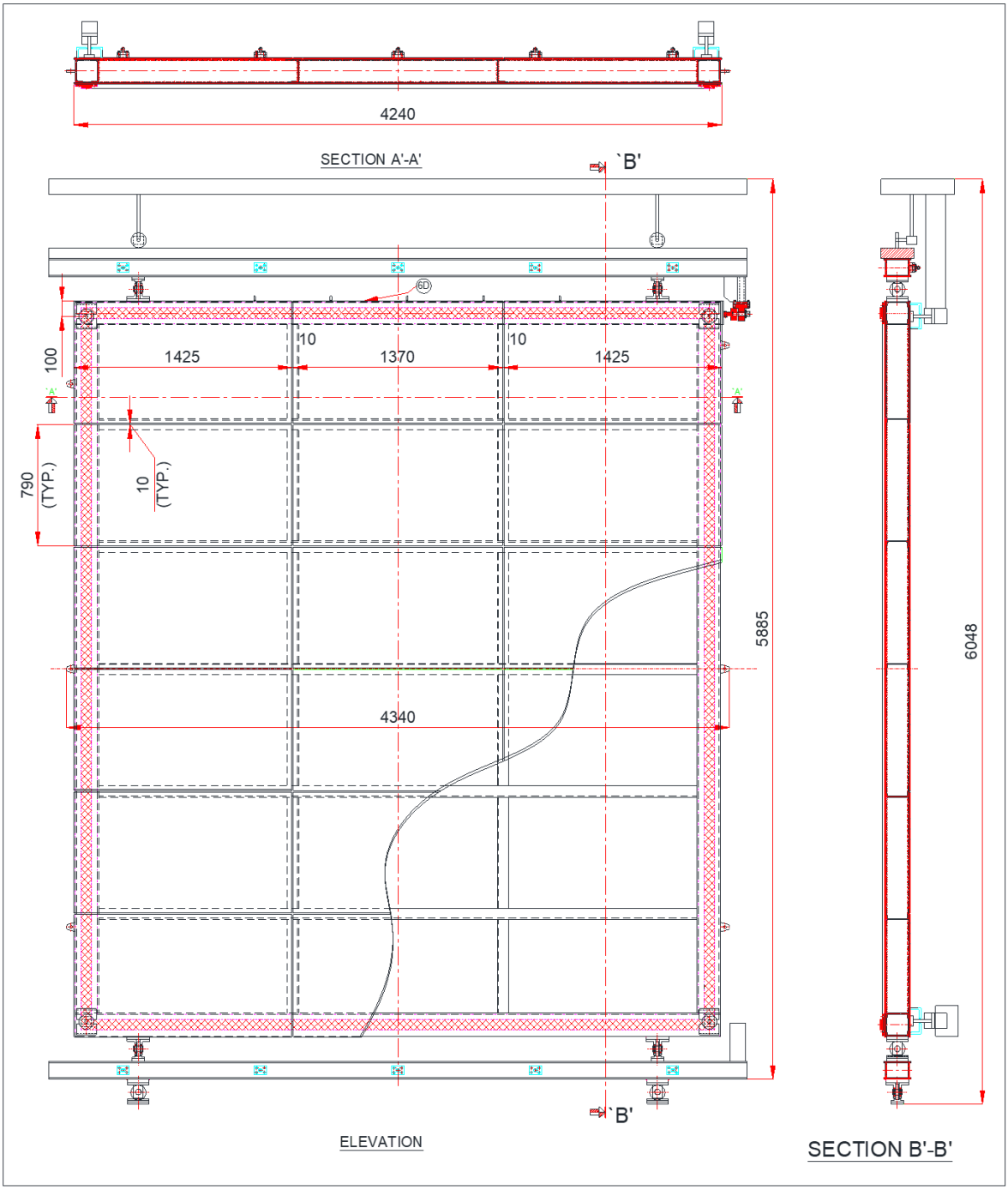

Figure 7: General Arrangement of VAL

5.13 Stainless Steel Tanks

There are different types and sizes of Stainless Steel Tanks for various system to meet the specific requirements as described hereunder. Capacity of different tanks are and quantity are specified in the Table below.

All these tanks are fabricated from SS304L material.

Table 6: Details of the SS tanks

Types of Tank	Capacity (litres)	Number of tanks
PCW Delay Tanks	32000	4
PCS Delay tank	6500	1
Heavy Water Delay Tank	6500	1
Heavy Water Dump tank	12000	1
Heavy Water Storage tank	12000	1
Heavy Water Expansion tank	1000	1
Heavy Water Drain tank	2000	1

Delay Tanks

There are three types of delay tank namely PCS delay tank, Heavy water delay tank and PCW delay tanks. These Delay Tanks are provided in the coolant path to temporarily store reactor coolant coming out from the core, primarily to facilitate the decay of activity. For capacity of the tank refer Table 6.

Heavy Water Dump Tank

The Heavy Water Dump Tank is a safety-grade tank designed to rapidly receive heavy water. This tank facilitates reflector vessel dumping and provide safe containment of heavy water. A Helium cover gas system is maintained over the dump tank and storage tank to provide an inert atmosphere, preventing contamination and oxidation, and also ensuring communication with core components. This Helium cover gas assists in the controlled transfer of heavy water between reactor components and the dump tanks, thereby supporting both safety and operational requirements.

Heavy Water Storage Tank

The Heavy Water Storage Tank is designed to safely store and preserve heavy water during reactor maintenance, shutdowns, or operational adjustments.

Heavy Water Expansion Tank

The Heavy Water Expansion Tank is a device used to absorb the excess pressure caused by the thermal expansion of heavy water during reactor operation. By providing a cushion of compressible Helium cover gas, the expansion tank prevents dangerous pressure build-ups that can damage pipes, valves and other system components.

Heavy Water Drain Tank

The heavy water drain tank will facilitate addition and transfer of fresh/system heavy water from drain tank to storage and dump tank, and if required, draining of different equipment delay tank, pumps, heat exchangers, filters etc. of reflector cooling system to drain tank and heavy water sampling

5.14 Fuel Locking System

5.14.1 Introduction

The Fuel Locking System (FLS) is designed to provide reliable locking and unlocking of 25 in-core assemblies (Fuel assemblies and Central assembly) against upward force due to hydraulic drag and pressure differential across the core, preventing fuel lift-off from the grid plate. Locking of the assemblies is achieved from the bottom of the reactor pool. The FLS is located below the grid plate inside the plenum structure and extends up to the Fuel Clamp (FC) Room (5.235 m high, 6.2 m wide, D-shaped section). Each in-core assembly is independently clamped at its bottom using a hydraulically operated grappler, remotely controlled from the FC Room.

Three types of locking sub-assemblies—Type-1 (inner, 8 nos.), Type-2 (outer, 16 nos.) and Type-3 (1 no) are provided based on total height. The embedded block, 2320 mm high, houses 25 precision-drilled holes (Ø 56–58 mm, ~ 82.8 mm pitch) concentric with grid plate openings, providing accurate guidance, lateral support, and protection from PCW flow.

Each fuel assembly is clamped at its lower toe region by a pair of grapplers actuated by a vertical-motion hydraulic cylinder via an actuator rod and coupler. Downward spring force ensures positive locking, while upward hydraulic actuation enables declamping. Redundant sealing - two dynamic cup seals and one bellow seal ensures complete leak tightness between the reactor pool and FC Room.

5.14.2 Major Sub-assemblies

Fuel Locking Sub-assembly: Comprises grapplers, hinge pins, actuator head, actuator rod, outer tube, transition pieces, and positioning rod. Grapplers engage the fuel toe via matching profiles; leaf-spring-loaded plungers maintain concentricity and vibration resistance. Clearance of 0.5 mm ensures easy insertion and removal.

Sealing Cylinder Sub-assembly: Includes cylinder, gaskets, cup seals, and flanges. Provides three sealing barriers—two dynamic cup seals on actuator rod and one static bellow. Leak detection between seals monitors first-seal failure. EPDM static gaskets seal fixed joints.

Bellow Sub-assembly: Multi-ply metallic bellow (50 mm stroke) acts as a tertiary barrier in case of dynamic seal failure. Connected via bolted flanges to sealing cylinder and actuator rod.

Actuator Sub-assembly: Hydraulic actuator with cylinder, piston, spring, and coupler. Spring force maintains locking; hydraulic pressure enables declamping. Each of the 25 assemblies is served by an independent hydraulic line routed from FC Room.

Salient Features

- Positive mechanical locking ensuring fail-safe operation.
- Triple barrier sealing for pool-water integrity.
- Remote hydraulic operation and maintenance accessibility.
- Modular design allowing replacement from either pool top or FC Room.
- Compact geometry (55 mm max grappler diameter, 0.5 mm annular clearance).
- Designed for longevity, ease of installation, and reliability in reactor service.

5.15 Ion Chamber/Fission Counter Housings & Lead Blocks

1) Ion Chamber System Overview

The Ion Chamber (IC) System forms a key part of the reactor instrumentation used for neutron and gamma flux monitoring in the HFRR. The system comprises Ion Chamber Housing Assemblies, IC Adjustment Mechanism, Lead Blocks with Guide Blocks, and IC Storage Facilities. The design ensures proper reactor monitoring, ease of maintenance, corrosion resistance, and compliance with all radiological and operational requirements.

2) Ion Chamber Housing Assembly

Each Ion Chamber are placed inside an Aluminium alloy housing. The Ion Chamber Housing is a specially designed structural enclosure made up of aluminium alloy that shall provide mechanical protection, environmental isolation and mounting support for ion chambers & its cables. It is an essential component of the overall neutron and gamma flux monitoring system, ensuring the safe and reliable functioning of the reactor. There are two parts of the Ion Chamber Housing assembly, first is the detector part and other is detector cables. The tentative height of detector housing is around *745mm* and outer diameter of *102mm*. The overall height of the Housing assembly are around *12.6m* keeping the top most part of the housing in normal operating condition above pool water level. The housing for the detector cable shall have a tentative OD of *36mm and* ID of *26mm*. There are 11 numbers of IC Housing assemblies present inside the Reactor Pool.

3) **Ion Chamber Adjustment Mechanism**

The manually operated IC Adjustment Mechanism enables individual vertical movement of each IC within ±50 mm from its mean elevation (El. 102.033 m). The mechanism supports four ICs at each of the four locations and is mounted on stainless steel support pads welded to the inner RPT wall. All operating parts remain above pool water level. The system includes provisions for scale markings to indicate movement, positive locking to prevent displacement, and trays beneath bolted joints to capture loose fasteners. The design ensures no mechanical interference or rubbing between IC housings and guide blocks. Tentative weight of each mechanism is 250 kg and MOC SS 304L.

4) Lead Block and Guide Block

Each IC location shall have one L-shaped Lead Block providing front and bottom gamma shielding. Lead plates of maximum available thickness shall be assembled to form the required geometry and encased in aluminium for structural protection. The blocks are designed to be removable and mounted on the IC Lead Block Support Structure. Aluminium Guide Blocks, positioned above each Lead Block, guide ICs during vertical movement and ensure precise alignment. Both components are made of aluminium alloy and supported as per structural design requirements. The tentative weight of the lead required to make L-shaped Lead Block shall be 1.5 Ton. The encasing aluminium box and Aluminium Guide block shall be made of Al-5052-O of combined approximate weight of 100 kg each.

The Lead Block support structure shall be made from SS 304L with tentative overall weight of 13 Ton (considering for all four lead block assembly).

5) IC Storage Facility

Two types of storage facility shall be provided in the Reactor Building-one for used (radioactive) ICs/FCs and one for fresh ICs/FCs. The used IC storage shall have capacity for sixteen (16) assemblies with heavy-density concrete shielding, while the fresh IC storage shall accommodate ten (10) assemblies without shielding but with protective covers. Both storages are designed to prevent structural or dimensional damage to the IC housings and shall be integrated with the Reactor Building civil structure.

5.16 Service Pool Storage Cage

The Service Pool Storage Cages are designed for the safe and efficient storage of spent fuel assemblies (SFA), isotope assemblies (IA), and other irradiated assemblies within the Service Pool. These cages are fully submerged in pool water, providing both shielding and natural cooling through convection. The

dimensional details of the various types of assemblies will be provided to the successful bidder during the detailed design stage.

Types of Storage Cages: The following types of storage cages are envisaged:

- Storage Cage for SFA (6 × 6)
- Storage Cage for CFA (6 × 6)
- Storage Cage for Full Core Unloading (6 × 4)
- Storage Cage for IA (6 × 3)
- Storage Cage for Fresh Fuel (2 × 5)

General Construction

Each Storage Cage for SFA and CFA measures 800 × 800 × 2325 mm and accommodates 36 assemblies. The structure comprises box plates, top and resting plates, locating plates, cadmium sheets, pillar guides, pad plates, lifting lugs, and support members.

The top plate has 82 × 82 mm openings, while the resting and locating plates have 73 × 73 mm openings. The resting plate bears the assembly weight, and the top and locating plates provide lateral restraint. Five cadmium sheets (775 × 850 × 2 mm) are placed between guide plates for neutron absorption, and the entire assembly forms a rigid welded box structure.

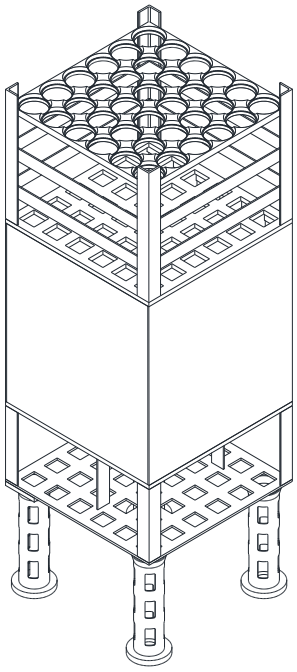

Figure-8: Isometric view of Storage Cage

Rectangular openings in the plates promote natural water circulation for passive cooling. The structure rests on four corner pillars, with pad plates welded to the

service pool bottom. Tapered interfaces between pillars and pad plates ensure proper alignment and restrict lateral movement. The geometry of the pillars ensures stability under horizontal or seismic loads.

The storage cages for Irradiation Assemblies (IA), Full Core Unloading, and Fresh Fuel Storage are similar in type of construction differing only in grid layout and opening dimensions based on assembly type. The general arrangement drawings of the storage cages are shown in Figure-8 and the quantity and the weights of the fuel storage cages are mentioned in BOQ clause. All the fuel storage cages will be constructed from Aluminium alloy (Aluminium 5154-O).

5.17 NTD Silicon Facility

The Neutron Transmutation Doping (NTD) Silicon Facility is an engineered system integrated within the reactor reflector region for production of high-purity N-type silicon through controlled neutron irradiation. The system enables transmutation of silicon isotopes to phosphorus under uniform neutron flux conditions, achieving a precisely defined resistivity variation within ±5%, suitable for semiconductor and research applications.

The facility consists of a dedicated NTD irradiation position provided in the vertical thimble of reflector vessel with 250 mm internal diameter designed to accommodate a mono-crystalline silicon ingot of 600 mm length and 200 mm nominal diameter. The irradiation setup ensures stable mechanical support, a hydraulic operated ingot rotating mechanism for uniform and consistent neutron flux distribution during reactor operation.

The system design incorporates a dual-shell irradiation assembly comprising a rotor shell and a stator shell. The silicon ingot is housed within the rotor shell, which is positioned concentrically inside the stator shell. The rotor shell is continuously rotated during irradiation to achieve radial neutron flux uniformity, thereby ensuring homogenous doping across the silicon volume. Hydraulic jet-driven rotation is adopted for the rotor shell to achieve smooth, maintenance-free operation within the reactor pool environment. The stator shell remains stationary and provides structural support as well as protection to the irradiation thimble against any contact or wear from the rotating parts.

The NTD silicon facility shall include all required mechanical components, hydraulic rotation system, irradiation thimble assemblies, support fixtures, and associated instrumentation required for safe, reliable, and repeatable operation within the reactor conditions. The system shall be fully integrated with the reactor’s reflector vessel, cooling system, and operational control arrangements. The design shall consider radiation shielding, temperature control, and ease of remote handling during insertion and removal of silicon ingots. The facility shall ensure the following.

- Stable and uniform neutron flux exposure throughout the ingot volume.

- Smooth rotation via hydraulically driven rotor assembly with no mechanical interference.
- Reliable performance, ease of maintenance, and compatibility with reactor operation schedules.

5.18 EPs, Support Structures & Miscellaneous Pool Components

The Embedded Parts (EPs) and Embedded Support Structures form an essential part of the Reactor Pool Block, enabling secure installation, alignment, and load transfer of various Structures, Systems, and Components (SSCs) such as Pool Tanks, process piping, and equipment supports. These elements include plates, angles, channels, lugs, anchor bolts, sleeves, and shear connectors anchored in heavy-density reinforced concrete to transfer operational, erection, and seismic loads effectively.

Embedded supports are positioned at designated locations to maintain accuracy and stability during Pool Block construction and component installation. They provide anchorage and interface points for mechanical, electrical, and instrumentation systems. The configuration, plate thickness, and embedment depth will be finalized during detailed design to meet structural and load requirements in line with relevant EPC civil and structural documents. The quantities and approximate weights of the EPs required are shown in the BOQ list.

5.19 Irradiation Assemblies

Irradiation assemblies (IAs) enable neutron exposure of sealed target capsules placed within dedicated thimbles of the Reflector Vessel (RV). About thirty one irradiation thimbles are provided in the reflector vessel. Heat generated in capsules is removed by pool cooling water flowing downward through irradiation assemblies and flow through each IA is decided based on the orifice plate provided below each thimble.

Capsules are loaded and stacked in IAs inside hot cells, transferred to the reactor pool for irradiation, and later returned for unloading and isotope processing. Each IA rests on a top seating surface and is guided at the bottom. Tray rods consist of outer tubes with side windows for capsule insertion, holding and locking devices, and handling assemblies.

Out-of-core IAs are classified according to their reflector location as High Flux Zone (HFZ), Medium Flux Zone (MFZ), and Low Flux Zone (LFZ).

Each IA comprises an outer tube with three capsule windows per level, a bottom guide for alignment, and a top handling assembly. Capsules are secured by a spring-loaded locking rod to prevent movement during irradiation. Unlocking and handling in hot cells are performed using Master Slave Manipulators (MSM). Table 7 shows the important dimensions of the tray rods.

Table 7- Irradiation Assembly Details

Details	Tray Rod
Material of tray rod components in the core	Al- 5052-O
Overall length of irradiation Assembly	≈1680 mm
OD of outer tube	72 mm
ID of outer tube	67 mm
Irradiation length in tray section	760 mm
Number of samples in tray section	24 nos.
Distance between two consecutive layers of samples	102 mm
Thickness of capsule resting plate	8 mm
Height of Capsule Guide Cup	20 mm
Inside Diameter of Capsule Holding Cup	24 mm
Outside Diameter of Capsule Holding Cup	26 mm
Diameter of locking Rod	12 mm
Thickness of capsule stopper plate	6 mm

5.20 Intermediate Storage Racks

The Intermediate Storage Rack (ISR) is a key component of the Fuel Handling System (FHS), enabling safe transfer of fuel and irradiation assemblies during reactor refuelling operations. As direct transfer between the reactor core or reflector vessel and the Fuel Storage Rack (FSR) in the service pool is not feasible due to layout constraints, the ISR serves as an intermediate buffer space within the reactor pool. It allows the Fuelling Machine (FM) to place the spent assemblies and the Fuel Transfer System (FTS) to handle fresh ones safely, with suitable interlocks to prevent interference between their operations.

The ISR is mounted on the Reactor Pool Tank wall and designed to ensure safe handling, and cooling, of fuel assemblies under a minimum 4 m water depth. Its layout provides spacing to maintain proper alignment for FM/FTS operation, and reference positions for machine calibration. The ISR thus ensures smooth, reliable, and safe fuel transfer, supporting continuous reactor operation.

5.21 Fuel Test Loop (FTL) Handling

5.21.1 Seal Plug

The Fuel Test Loop (FTL) operates at 175 bar and 330°C. A seal plug is installed at the top end of the FTL to prevent leakage of loop fluid. Temperature at the seal plug location is maintained below 100°C. The plug assembly consists of a plug body with latch, an outer sleeve, and seals (EPDM O-ring with backup ring). The plug body fits into the end fitting, and the outer sleeve locks it by engaging with corresponding segments. A latch prevents accidental rotation.

5.21.2 Tools for Seal Plug

Seal plug installation/removal is performed from the Operation Trolley (OT) using Tool-1 and Tool-2. Tool-1: Handles plug body + outer sleeve and enables assembly/disassembly with end fitting. Tool-2: Provides controlled rotation of the outer sleeve.

Due to limited overhead space (CRDM platform, Fuelling Machine etc.), each tool is made in two parts: upper and lower.

5.21.3 Test Fuel Handling System (TFHS)

TFHS enables insertion/removal of test fuel into the FTL fuel tube (ID 65/75 mm) and its transfer between FTL and the service pool through the transfer canal. Operations are performed manually by operators stationed on the OT (EL 114.87 m) using dedicated tools.

5.21.3.1 Position Plug (PP)

A Position Plug ~4 m long will positioned the test fuel at the required elevation inside FTL. The PP connects to the test fuel at the bottom through a connector and rests on an internal step in the fuel tube. During handling, PP is latched to the lower tool through a ball-latch joint.

5.21.3.2 Tool Gripping System

Mounted on OT, the gripping system holds the lower tools, seal plug or PP assembly during transfer and during assembly/disassembly of tool parts. It uses V-shape jaws with screw locking and a collar rest to prevent slippage.

5.22 Reactor Building & Radiation Shielding Walls Embedded Penetrations

The “Reactor Building & Shielding Walls Penetration EPs” are specially designed components that ensure two critical functions:

- Leak-tightness of the Reactor Building containment boundary, and
- Radiation shielding effectiveness of the reactor shield walls.

These engineered penetrations provide sealed passageways for process piping, electrical power cables, C&I cables, neutron beam guides, ventilation ducts, and other essential services through the Reactor Building/containment walls and associated shield walls of the Research Reactor Facility (RRF).

As the RRF is intended for advanced R&D applications, the Reactor Building incorporates researcher’s areas with sophisticated equipment operating in a conditioned environment. The building is maintained at slightly positive pressure with a once-through ventilation system, while housing potentially contaminated air. In accordance with nuclear safety requirements, the leak-tightness of the

containment must be preserved under both normal and postulated accidental conditions. Therefore, all penetrations that pass pipes, ducts, or cables are engineered to maintain the containment's integrity as part of the pressure-retaining boundary.

In addition, the penetrations must also prevent radiation streaming-the leakage of radiation through gaps or annular spaces around penetrated elements. Radiation shielding is essential to protect occupational workers and to maintain dose rates within permissible limits in both normal and limited occupancy areas. To minimize radiation streaming through the shielding walls, penetrations are designed with special configurations and shielding provisions that ensure radiation exposure is kept as low as reasonably achievable (ALARA).

The tentative list of such specialized penetration EPs for the Reactor Building and Shield Walls is provided in BOQ clause. Other type of EPs which are penetrating the normal walls are not identified here.

6.0 Process Systems

The Reactor Facility comprises various Process & Utilization Systems and Auxiliary Systems. The key systems are outlined below to provide clarity on the overall project scope. The schematic 3-D piping and equipment layout of the various process systems of the HFRR is shown in Figure-9.

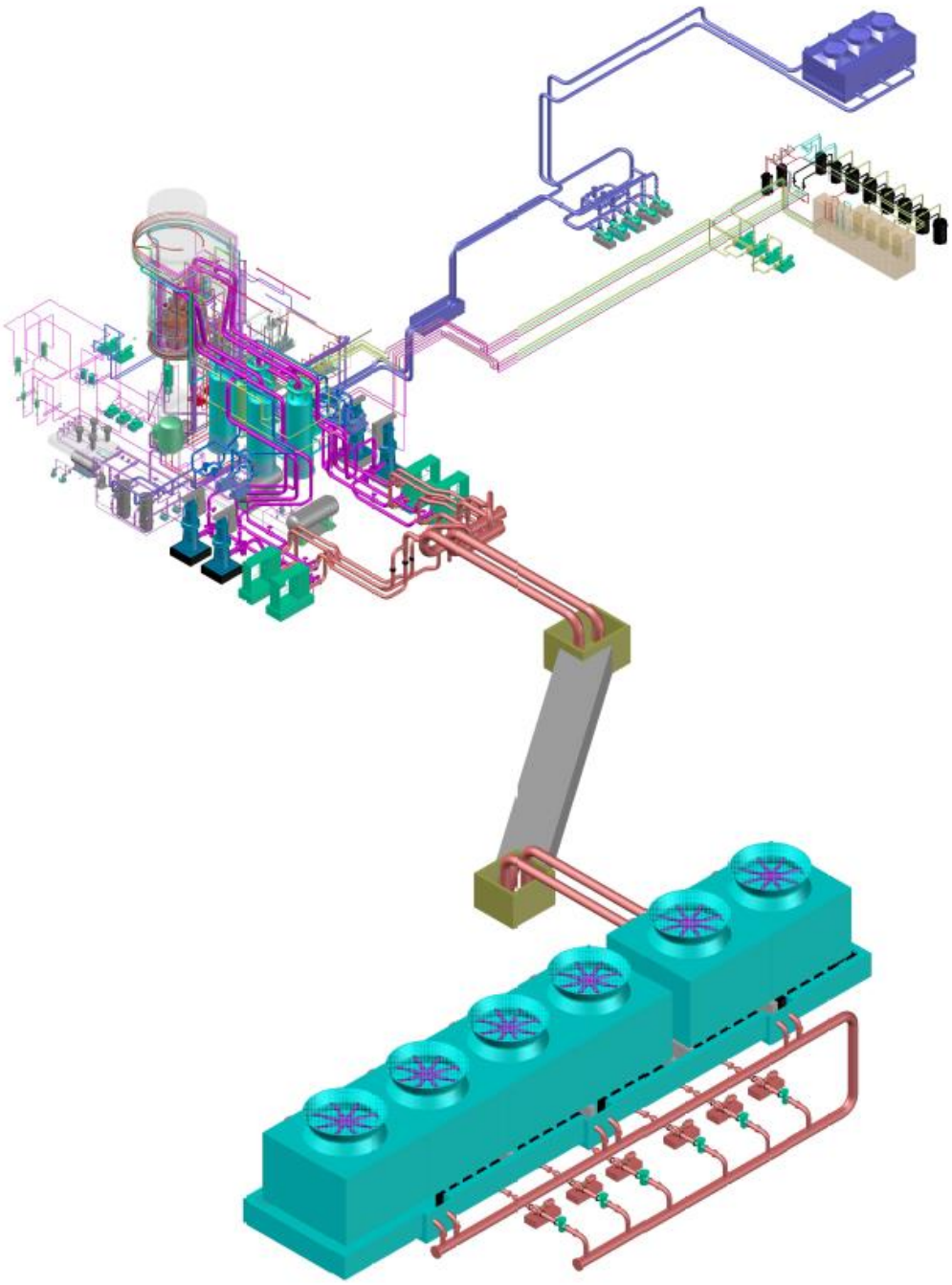

Figure-9: Isometric view of HFRR Process Systems

6.1 Primary Coolant System (PCW)

The Primary Coolant System removes heat generated in the reactor core (~40 MW) and transfers it to the Secondary Cooling System via heat exchangers. The system ensures safe and reliable core cooling during normal operation, operational transients, and design-basis accidents. The system comprises:

- Main coolant system with two loops, each having two main pumps and heat exchangers.
- Auxiliary coolant system with two pumps per loop for core cooling during main pump unavailability.
- Purification system to maintain water chemistry and minimize radiation.
- Emergency core cooling system for accident scenarios.

Each of the two loops circulates ~28,000 lpm of demineralized water, with core inlet/outlet temperatures of 40°C/51.5°C. Secondary cooling flow is 80,000 lpm, rejecting heat to cooling towers. Auxiliary pumps operate automatically on main pump trip and are powered by uninterrupted Class-II AC supply.

Design & Safety: Nuclear Safety Class 2 and Class 3, Seismic Category 1 (ASME Section III, NCD), Design Pressure 10 kg/cm², Design Temperature 80 °C; water chemistry controlled within specified limits of pH, conductivity, chloride, TDS, silica, turbidity, and activity. The Primary Coolant System layout is explained in Figure-20 and the items/equipment are listed in BOQ clause.

6.2 Heavy Water Reflector System (HWRS)

The HWRS removes heat from the heavy water reflector and maintains its level and chemistry. It consists of a reflector tank, delay tank (6,500 L), expansion tank (1,000 L), two recirculation pumps (4,000 lpm), two heat exchangers, and a purification system.

During normal operation, ~3,900 lpm circulates through the reflector tank and ~100 lpm through purification (filters and ion exchangers). Pumps draw from the reactor pool, discharge to heat exchangers, and return to the reflector tank. The expansion and delay tanks ensure stable water level and flow.

Total system inventory is ~15,000 L, with additional dump, storage, and drain tanks for draining if needed.

Design & Safety: Nuclear Safety Class 2 and Class-3, Seismic Category 1 (ASME Section III, NCD), Design Pressure 10 kg/cm², Temperature 80°C, water chemistry controlled within defined limits. The Heavy Water Reflector System items/equipment are listed in BOQ clause.

6.3 Helium Cover Gas System (HCGS)

The Helium Cover Gas System provides an inert, non-reactive atmosphere above the heavy water reflector. Helium is supplied at a controlled pressure to prevent ingress of air or moisture, thereby minimizing oxidation, corrosion, and radiolysis effects in the reflector system. The system also facilitates removal of gaseous impurities (e.g., hydrogen, oxygen, tritium, and fission gases) through purification units, ensuring high purity helium is continuously maintained. This cover gas acts as a protective barrier, contributes to safe reactor operation, and allows

monitoring of leakage or abnormal gas activity from the reflector region. The Helium Cover Gas System items/equipment are listed in BOQ clause.

6.4 Pool Cooling System (PCS)

The Pool Cooling System removes heat from irradiation assemblies and spent fuel assemblies in the reactor pool and service pool respectively. It includes three pool cooling pumps (PCPs), three shutdown pool cooling pumps (SPCPs), two heat exchangers, a 7,000 L (litre) delay tank, and a purification system.

During normal operation, two PCPs circulate 4,100 lpm from the reactor pool and 600 lpm from the service pool through the delay tank and one heat exchanger to the DHRS, returning 3,900 lpm to the reactor pool and 800 lpm to the service pool. Purification system (~300 lpm flow) maintains water chemistry.

SPCPs provide backup cooling and start automatically on PCP trip or low flow. Siphon break lines prevent pool drainage, and flywheels ensure coast-down flow. PCPs use Class IV power; SPCPs use Class II. The Pool Cooling System items/equipment are listed in BOQ clause.

Design & Safety: Nuclear Safety Class 2 and Class 3, Seismic Category 1 (ASME Section III, NCD), Design Pressure 8 kg/cm², Design Temperature 65 °C; water chemistry controlled within specified limits of pH, conductivity, chloride, TDS, silica, turbidity, and activity. The PCS schematic flowsheet is provided in Figure-19: Flow sheets of Pool Cooling System (PCS)., Decay Heat Removal System, HW Reflector System, Hot Water Layer System, Helium Cover Gas System and the items/equipment are listed in BOQ clause.

6.5 Hot Water Layer (HWL) System

The HWL system maintains a 2 m hot water layer at the pool top to reduce radiation field. It consists of two pumps (300 lpm), 2 filters, 2 ion exchangers, and 2 heaters. Normally, one set of pump, filter, ion exchanger and heater operate; both heaters can be used during start-up. Water is drawn equally from the reactor pool & service pool and subsequently passed through heater, and returned to maintain the hot water layer.

Design: 45 °C hot water layer temperature, 150 kW heaters, 10 bar (g) design pressure, 60 °C design temperature, ASME Section III ND. DM water (Water chemistry: pH 5.5–7, conductivity <2 µS/cm, chloride <0.3 ppm, TDS <5 ppm). The Hot Water Layer (HWL) System items/equipment are listed in BOQ clause.

6.6 Secondary Cooling Water (SCW) System

The SCW system transfers heat from the primary coolant to the atmosphere via PCW/SCW heat exchangers and induced draft cooling towers (IDCTs). It

comprises six pumps and six IDCTs, with four operating normally and two on standby. IDCTs are roof-mounted, and pumps are on the ground floor.

Cooled water from the four active IDCTs (total 84,000 lpm) enters a common suction header, passes through coarse strainers and isolation valves, and is pumped through fine strainers and motorized valves into the SCW discharge header. Two branches feed the two PCW loops, each with two heat exchangers carrying 20,000 lpm (total 80,000 lpm). Return water combines into the cooling tower supply header and is redistributed to the IDCTs, with equalizer lines ensuring uniform basin levels.

SCW pumps and IDCT fans operate on Class IV power, with makeup water (1,390 lpm) supplied from service water and blowdown (445 lpm) maintaining water quality. The Secondary Cooling Water System items/equipment are listed in BOQ clause.

6.7 Decay Heat Removal System (DHRS)

The DHRS removes 4.8 MW decay heat via a three-cell cooling tower using three main pumps (6,250 LPM) and two auxiliary pumps (3,150 lpm). Two pumps operate normally, with one auxiliary pump during shutdown. System pressure is maintained above pool cooling system and heavy water system to prevent radioactive ingress into DHRS. Redundancy ensures high reliability, and cooling tower equipment is suitably protected.

Design & Safety: Nuclear Safety Class 3, Seismic Category 1, Design Pressure 6 bar, Temperature 60°C, cooling tower water chemistry within limits. The Decay Heat Removal System items/equipment are listed in BOQ clause.

6.8 Waste Management System (WMS)

The Waste Management System ensures safe collection, segregation, storage, and transfer to authorized treatment/disposal facilities.

6.9 Beam tube and inner gate cooling system

The Beam Tube and Inner Gate Cooling System is provided to remove heat deposited in the beam tube shuttering gates during reactor operation. Neutron beams passing through the tubes result in secondary gamma heating and localized energy deposition in the gate materials. To ensure reliable operation, the system circulates water through cooling channels in the beam tubes inner gates. This maintains components at safe operating temperatures, prevents material degradation, and ensures smooth functioning of neutron beam shutters for experimental facilities. The Beam tube and inner gate cooling system items/equipment are listed in BOQ clause.

6.10 Fuel Test Loop

The Fuel Test Loop (FTL) system consists of out-of-pool systems including the Primary Cooling System, Dowtherm System, Emergency Cooling System (ECS), and Jacket Cooling System. The primary system circulates demineralized water through the test section to remove heat, maintaining high pressure (up to 175 bar) and temperature (up to 330°C). Two main loop pumps operate in parallel, with one standby, assisted by two decay heat removal pumps for residual heat removal. Flow control, loop heating, and bypass provisions are included for operational flexibility.

A purification and sampling system continuously circulates part of the main loop flow through filters and mixed bed ion exchangers to maintain water chemistry and pH.

A pressurizer system maintains loop pressure via steam generation in the pressurizer vessel, accommodating thermal expansion and feed/bleed operations.

The Dowtherm system transfers heat from the main loop system to RRF's decay heat removal system (DHRS) using Dowtherm-A thermal fluid in a low-pressure closed loop with pumps, cooler, and expansion tank.

The Emergency Cooling System (ECS) mitigates loss-of-coolant events by injecting light water from pressurized accumulators and the Emergency Water Storage Tank (EWST) to remove decay heat.

The Jacket Cooling System limits the pressure tube temperature (<80°C) by circulating DM water through jacket tubes with two centrifugal pumps (one operating, one standby). Heat is transferred to the Decay Heat Removal System via a plate heat exchanger. Continuous level and activity monitoring, water chemistry control via filters and mixed bed ion exchangers, and pressure relief devices ensure safety.

6.11 Pneumatic Carrier Facility

The Pneumatic Carrier Facility (Rabbit System) is provided in the RRF to enable rapid, safe, and reliable transfer of small samples requiring short-term irradiation in the reactor core. The system is designed for sealed capsules ("rabbits") that can be pneumatically propelled through transfer tubes using compressed air, ensuring minimal reactor downtime and operator radiation exposure.

The facility consists of loading and unloading stations outside the reactor block, transfer tubes, compressed air supply with control valves, capsule receivers, and instrumentation for operation and monitoring. Capsules are loaded at the station located in the reactor hall and pneumatically transferred to irradiation positions inside the reactor. After the required exposure, they are automatically returned to the laboratory by providing reverse air flow to bring the capsule back in the handling area for further processing.

The system incorporates safety interlocks, shielding, and contamination-free capsule handling glove boxes and fume hoods to meet nuclear safety standards. It allows efficient conduct of experimental programs such as activation analysis, material testing, and short half-life isotope production. The facility is designed for reliable operation with provisions for redundancy in air supply and ease of maintenance.

6.12 Air Conditioning and Ventilation System

The Air Conditioning & Ventilation System (AC&VS) of the Research Reactor Facility (RRF) is a critical system designed to ensure controlled environmental conditions, safe habitability, and proper containment. The AC&VS caters to five major building groups of the RRF:

Reactor Building AC&VS

It provides safe, reliable, one through ventilation during both reactor operation and shutdown. This system maintains controlled air flows to ensure clean-to-active area pressure gradient. The exhaust air is treated through HEPA filters and stack discharge. The flow sheet of Reactor Building AC&VS is shown in Figure-21.

Control Room Building AC&VS

The Control Room Building AC&VS houses operators and sensitive electronic equipment. This air conditioning maintains comfort conditions and controlled humidity to support long-term continuous operation. The AC&VS system ensures uninterrupted operation even during emergency conditions.

Filter House, Guide Tube (GT) Lab & Decontamination Building AC&VS

The GT Lab requires conditioned air to maintain ambient temperature. Localized AHUs and Fan Coil Units (FCUs) are provided to supply controlled air for scientific instruments and personnel cabins in GT Lab. The Filter House basement (contains sumps, pumps, ion exchangers, etc.) is ventilated by once-through systems with HEPA-filtered exhaust.

Service Building and Substation AC&VS

The AC &VS provides ventilation and cooling for electrical rooms, service areas, and auxiliary systems for maintaining equipment temperature within limits and providing safe working environment. This system also provides the air conditioning and ventilation in the supplementary control room.

Administrative Building AC&VS

This system of air conditioning ensures comfort in offices, meeting rooms, and common facilities. It is primarily a conventional HVAC system for normally occupied rooms.

6.13 Service Water System

The Service Water System of RRF provides reliable water supply, distribution, and recovery for cooling towers, ventilation air washers, and utility needs of the plant. Fresh water from another facility (outside scope of EPC) is stored in 1500 m³ underground tanks and distributed through Service Water Pumps (1500LPM) via a dedicated pump house. Makeup is provided to SCW, DHRS and MCW cooling tower basins, air washer units, and overhead tanks for labs, drinking and sanitation requirements.

Blowdown and bleed flows (~600LPM) are collected in underground tanks and treated in the RO plant, with product water reused for SCW CT basins and reject sent to SWTP. Emergency provisions include shutdown makeup tanks (90 m³ DHRS, 25 m³ MCW) on Class III power to ensure reactor safety during loss of Class IV supply.

The present EPC scope does not cover the civil works (tanks, pump house, sumps) of service water system, but it covers all the mechanical/process systems (pumps, piping, filters, cooling towers), and electrical & control systems, ensuring safe, reliable, and resource-efficient operation in line with codes and standards.

6.14 Reverse Osmosis Plant

The Reverse Osmosis Plant treats the blowdown water from IDCTs and Airwasher units having higher concentration of dissolved solids (TDS) to produce product water having low TDS value which is used for the makeup of the SCW system IDCTs. The RO plant is designed to treat 600 lpm of feed flow continuously. The raw feed is pre-treated by filtration using pressure sand filters, cartridge filters to produce the treated feed water of desired quality. This treated water is passed through the RO membrane under pressure to recover product water.

6.15 Compressed Air System (CAS)

The compressed air system in RRF is designed to supply dry, oil & dust free air for pneumatic controls, respiratory needs, instrumentation, and other plant requirements. It comprises two compressors, two air receivers, two air driers, and ceramic filters. Ambient air is filtered, compressed in two stages with inter-cooling and after-cooling, and stored in receivers to stabilize pressure. From the receivers, air is routed through driers for process use or through ceramic filters for service distribution across the reactor and service buildings.

6.16 Chilled Water System (CWS)

The RRF complex will receive chilled water from the central air-conditioning plant at UC-3 (a BARC facility available at site), where refrigeration units are installed and operated outside the project scope. The chilled water, supplied via insulated DN 400 NB pipelines, will be boosted in the RRF Service Building by three VFD-

driven centrifugal pumps (5000LPM, 40mWC head each) for distribution to reactor, service, control, admin, and auxiliary buildings. Two pot strainers (1 working + 1 standby) are provided for filtration. Dedicated 1 TR × 2 package units are also installed to ensure continuous cooling of helium coolers during any external chilled water outage.

6.17 Diesel Oil Storage and Transfer System (DOSATS)

The RRF facility will have a diesel oil storage and transfer system to supply fuel to three Emergency Diesel Generators (EDGs) and two Design Extension Condition (DEC) DGs. The system consists of two 20,000 liters bulk storage tanks, day tanks for each DG, fuel transfer pumps, strainers, filters, piping, and instrumentation. The bulk tanks, located near the Cooling Tower building, act as the primary fuel source and are interconnected with return lines from day tanks. Each EDG set is provided with an automatic transfer pump, with a common hand pump as backup for manual transfer during power outages.

6.18 Machinery Cooling Water (MCW) System

The MCW system at the RRF provides closed-loop cooling to conventional equipment such as helium compressors, main air compressors, DG sets (water-cooled), and control room condenser units. The system is designed to remove 1.5 MW of heat and reject it to atmosphere through two induced-draft cooling towers (1 operating + 1 standby). It comprises two centrifugal pumps (3000LPM, 50mWC each, 1 working + 1 standby), pot strainers, piping, valves, and instrumentation. Cooling towers operate with inlet/outlet temperatures of 41°C / 34°C at a 30°C wet bulb condition.

Pumps and fans are backed by Class III power supply to ensure continued operation of critical loads during Class IV supply failure. Service water provides makeup for cooling towers, with blowdown and cleaning provisions for water quality control. Spare connections are included for future expansion.

6.19 Fire Protection System (FPS)

The Fire Protection System (FPS) of the Research Reactor Facility (RRF) is a critical safety system designed to safeguard personnel, reactor facility, and supporting infrastructure against fire hazards. The scope broadly covers design, supply, installation, testing, and commissioning of a comprehensive network including fire detection and alarm systems, hydrant and sprinkler systems, firewater storage and pumping facilities, portable extinguishers, and specialized suppression systems for sensitive areas such as control rooms, electrical panels, cable tunnels, and laboratories. The system is to be engineered in compliance with AERB guidelines, NBC provisions, NFPA standards, and relevant statutory codes, ensuring reliable, redundant, and integrated protection across all identified fire zones of the facility.

7.0 Plant Electrical Supply System

The Plant Electrical System shall provide safe, reliable, and continuous electrical power to all RRF loads, including but not limited to process motors and heaters, ventilation systems, compressors, chilled water systems, control and instrumentation, lighting, receptacles, material handling systems, and auxiliary facilities such as workshops, stores, administrative buildings, and the canteen. The major electrical systems and equipment shall include, but not be limited to, high- and low-voltage switchgear, transformers, diesel generator Diesel Generators (DG), Uninterruptible Power Supply (UPS) systems, rectifiers, battery banks, Motor Control Centres (MCCs), distribution boards, power and control cables, cable trays, penetrations, fire barriers, lighting systems (including aviation warning lights and underwater lights), earthing, and lightning protection systems.

Simultaneous maximum demand of HFRR facility is 7.75 MVA. Refer Single Line Diagram (SLD) for details of plant electrical system.

The scope of the Plant Electrical Supply System shall encompass complete design, engineering, procurement, manufacture, testing at the Contractor's and Sub-contractor's works, delivery, installation, erection, site testing, commissioning, trial operation, integrated system testing, and final handover of the complete electrical system. The scope shall include, but not be limited to, the following:

- The design and engineering of plant electrical system shall meet the requirements outlined in the AERB safety guide AERB/NPP/SG/D-11(latest revision).
- High- and low-voltage switchgear systems including 11 kV, 6.6 kV, 415 V AC switchgear, DC switchgear, MCCs/PMCCs, and AC/DC distribution boards.
- Transformers (11kV/6.9kV, and 11kV/433V), emergency DG sets, UPS systems (PUPS and CUPS), float chargers, boost chargers, inverters, battery banks, and load banks.
- Selection, sizing, routing, supply, installation, and testing of power and control cables, including cable trays, trenches, tunnels, fire barriers, and penetrations.
- Emergency Transfer (EMTR) system.
- Control & monitoring system for emergency power supply system.
- SCADA system for control of the normal power supply system and monitoring of all electrical equipment throughout the plant.
- Distribution of Class IV, Class III, Class II, and Class I power supplies to all plant loads.

- Laying of cables in trenches, tunnels, or buried installations from substations to various buildings of the RRF, including associated civil works such as inspection chambers and Hume pipes for road crossings, and civil works for cable trenches from the plant boundary up to the 11 kV switchgear panel room.
- Terminations, bus ducts, interconnections, and interfaces between electrical equipment.
- Complete earthing and lightning protection systems.
- Power factor management system.
- Internal electrification works including lighting (aviation warning lights and underwater lights), receptacles, space heaters, and ACVS.
- Electrical distribution systems for auxiliary buildings including administrative buildings, workshops, stores, and canteen, covering ACVS, fans, lighting, and machinery.
- Design, supply, and installation of support structures for electrical equipment.
- Seismic qualification, by testing and/or analysis, of safety-related electrical equipment.
- Environmental qualification of PUPS, CUPS, float chargers, CPS, and inverters.
- Verification and Validation (V&V) of computer-based systems, microprocessor/ microcontroller-based systems, numerical relays, and microprocessor-based breaker releases used in safety-related electrical equipment.
- Qualification of equipment and components of the Normal Power Supply System in accordance with applicable BIS, IEEE, and IEC standards, and additional qualification of safety-related electrical equipment in accordance with AERB/SG/D-11 requirements.

The above scope shall ensure a safe, reliable, and fully monitored electrical power supply and distribution system for the entire RRF complex.

8.0 Control & Instrumentation (C&I)

The Control and Instrumentation (C&I) system is a vital system of the Research Reactor Facility (RRF), designed to ensure safe, reliable, and efficient operation of the plant across all operating states, including Normal Operation, Anticipated Operational Occurrences (AOO) and accident conditions. The guiding documents for safety and safety related I&C systems are AERB/NPP-

PHWR/SG/D-1, D-10, D-20, D-25 along with respective codes and standards related to I&C SSC design.

The overall I&C architecture (Refer Figure 23) comprises of Field Instrumentation and Control Centre Instrumentation which ensures that all essential functions can be performed from the Main Control Centre under normal conditions, while a Supplementary Control Centre is provided to monitor critical parameters, shutdown the reactor and execute essential safety functions in case the Main Control Centre becomes uninhabitable.

Main Control Centre comprises of Main Control Room (MCR), Utilization Control Room, Instrumentation Rack Area (Channel Rooms and Auxiliary Equipment Room), Cable Room and other auxiliary rooms.

Supplementary Control Centre comprises of Supplementary Control Room (SCR), Channel Rooms, Power Supply Rooms and Battery Rooms.

The system design is based on internationally accepted nuclear safety principles of redundancy, defense-in-depth, diversity, single-failure criteria, fail-safe logic, testability, independence of redundant channels of safety and safety related systems (including physical separation and functional independence). Safety SSCs are classified as Class IA, Safety Related SSCs are classified as Class IB or IC and other SSCs are classified as NINS (not important to nuclear safety)

Safety systems follow a triplicated (3-channel) configuration, each channel having independent sensors, cabling, signal conditioning, and logic processing, with actuation based on the 2-out-of-3 majority voting principle to achieve high reliability and availability. Key safety systems include the Reactor Protection System (RPS) actuating SDS-1 and SDS-2, Shutdown Cooling System Interlock Logic (SCSIL) and Containment Ventilation Isolation Logic (CVIL) and instrumentation for various plant process systems.

In addition to the items in the scope of supply of the Contractor, the Computer based RPS AT/CT and relay based RPS ET and RPS XT, Nuclear Detectors-Channels-Detector cabling, Control Rod Drive Mechanisms and Drive Systems connected with SDS-1 and SDS-2 are FIM to the Contractor. Contractor shall install, interface and commission the same to achieve the functional, performance, safety & security requirements.

Safety Related systems include the Reactor Regulating System (RRS), Alarm Annunciation System (AAS), and the Computerized Operator Information System (COIS), Fire Alarm System, Radiation Monitoring System, Beetle Monitoring System, Public Address and Emergency Siren System, MRDC and High Range Nuclear Instrumentation and various process system interlocks and various plant process systems.

Among these safety related systems, Computer based systems i.e. RRS, AAS and COIS, Radiation Monitors-Detectors-Channels, Nuclear Detectors-Channels-

Detector cabling are FIM (free issue material) to the Contractor. Contractor shall install, interface and commission the same to achieve the functional, performance, safety & security requirements.

Control power is distributed via Class I DC systems (24V & 110V) with battery backup and Class II AC UPS systems (230V), ensuring uninterrupted operation for both Main Control Centre and Supplementary Control Centre.

In addition to these core systems, the facility incorporates a wide range of C&I subsystems such as various plant process systems, cabling and tubing networks, computer LANs, Physical Protection System, Plant Surveillance and Monitoring System etc. These provide comprehensive monitoring, safety, protection, communication, and emergency response functions essential to the integrated operation of the reactor.

A central clock system is provided for display of real time and also for synchronizing all computer-based systems in the plant. The same along with slave display clocks is FIM to the Contractor. Contractor shall install, interface and commission the same to achieve the functional, performance, safety & security requirements.

All C&I structures, including panels, consoles, junction boxes, and transmitter racks, shall be designed with modular construction, adequate ventilation, ease of maintenance, and conformity to relevant national and international standards.

Various qualification requirements such as climatic qualification, seismic qualification, EMC qualification are required to be carried out in addition to the regular inspection and testing requirements on safety and safety related SSCs. Verification and Validation of Contractor supplied programmable devices is also required to be carried out.

Careful attention shall be given to the aspects of long-term maintainability, avoidance of technology obsolescence, and design simplicity to minimize Mean Time to Repair (MTTR) while ensuring regulatory compliance and high reliability.

9.0 Establishing Workshops, Labs, Interiors and Furniture Supplies

This includes establishing labs, workshops, and support facilities for smooth operation, maintenance, and monitoring of RRF, including chemistry and radiation health control. The scope covers supply, erection, and layout design of six types of labs/workshops, as well as interiors and furniture for auditoriums, conference rooms, meeting rooms, and offices.

Facilities to be established:

a) Mechanical Maintenance Workshop
b) Electrical Maintenance Workshop

c) Chemistry Control Lab (CCL)
d) Health Physics Lab
e) Furniture supply and interior works for various rooms/halls/stores/canteen
f) Provide the material handling in the workshop and stores building.

Scope includes detailed layout and interior design of labs, workshops, and other facilities. The major points are described below.

- Supply, procurement, manufacture, transport, erection, inspection, testing, site assembly, installation, trial operation, commissioning, and handover of all BOQ items of workshop and labs. This also includes training of purchaser's engineers/ technicians.
- Receipt, unpacking, inspection, and storage of items prior to installation.
- Interior design and setup of modular office cubicle workstations and offices.
- Interior design supply, installation and setting up of the conference room, meeting room and auditorium at the RRF.

The list of the items. Equipment, machines, tools, instruments, furniture are mentioned in the BOQ clause .

10.0 Summary Notes on EPC Scope and Project Overview

1) The proposed project is planned to be executed on a comprehensive Engineering, Procurement, and Construction (EPC) basis.
2) The EPC contractor shall be responsible for end-to-end execution of the project, broadly covering design and detailed engineering; procurement, manufacture, fabrication, inspection, and testing of equipment and materials; transportation and storage at site; execution of civil, structural, mechanical, electrical, C&I; erection, installation, system integration; and pre-commissioning, commissioning, and performance demonstration of the complete facility on a turnkey basis.
3) This document has been prepared to provide an introduction to the project and to explain the overall EPC scope.
4) It is intended to enable prospective bidders to understand the nature, scale, and execution approach of the proposed works.
5) The tendering process for the project shall be carried out in a two-phase EPC tendering mode.
6) The present document belongs to Phase-1, wherein only Pre-Qualification (PQB) information is being sought. The scope description provided in this document is indicative providing the entire concepts of the Research Reactor Facility (RRF).
7) Detailed technical specifications, drawings, indicative BOQ, and other tender documents will be issued separately to the bidders qualified in Phase-1.

Detailed scope, technical requirements, specifications, and execution details will be provided in the subsequent tender documents (Phase-2).

8) All terms and conditions governing the prequalification phase are covered separately in the Notice Inviting Tender for Pre-Qualification Bid (PQB).

11.0 Figures of HFRR

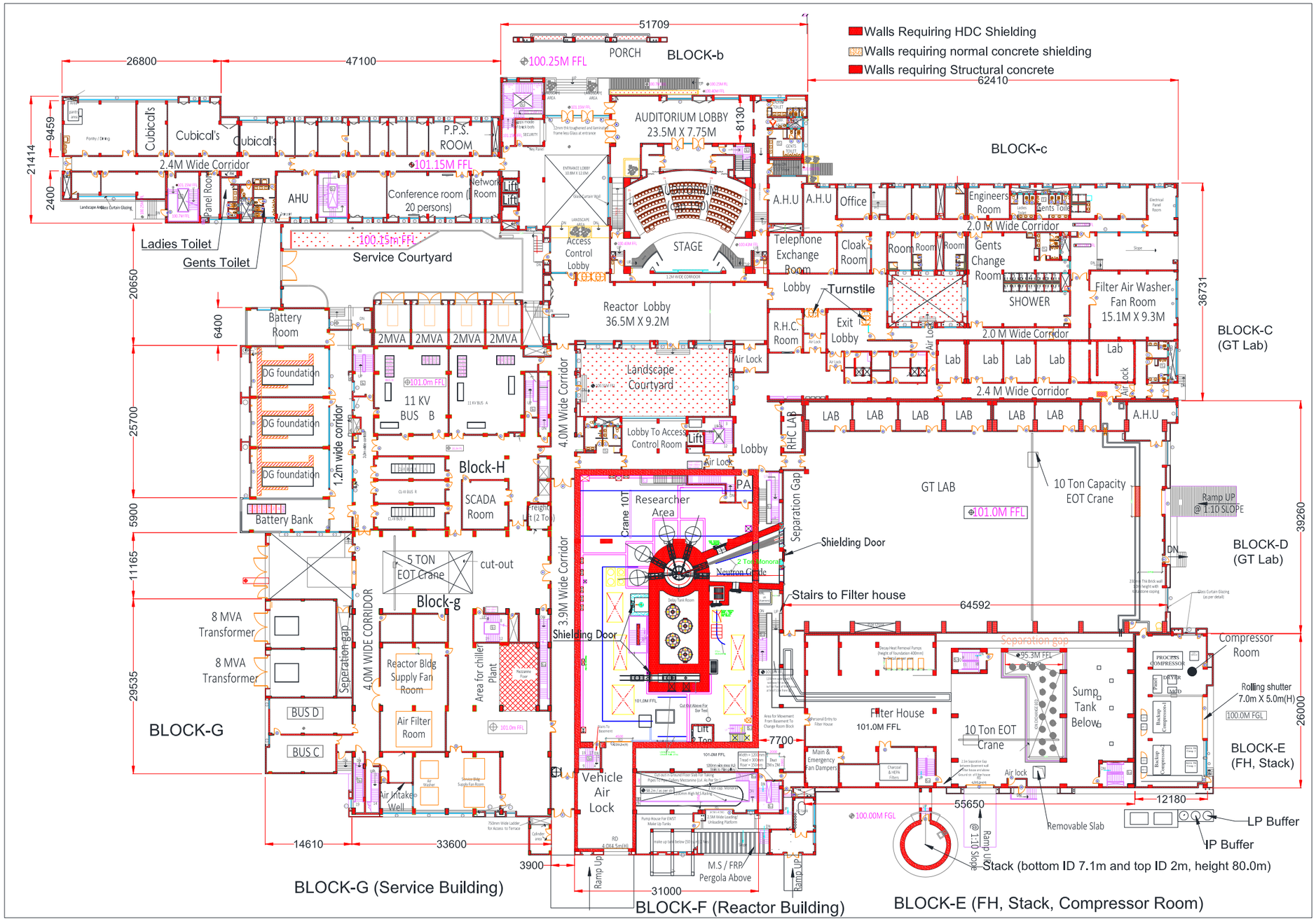

Figure-10: Reactor Ground Floor level Plan of HFRR Facility (@ EL 101m)

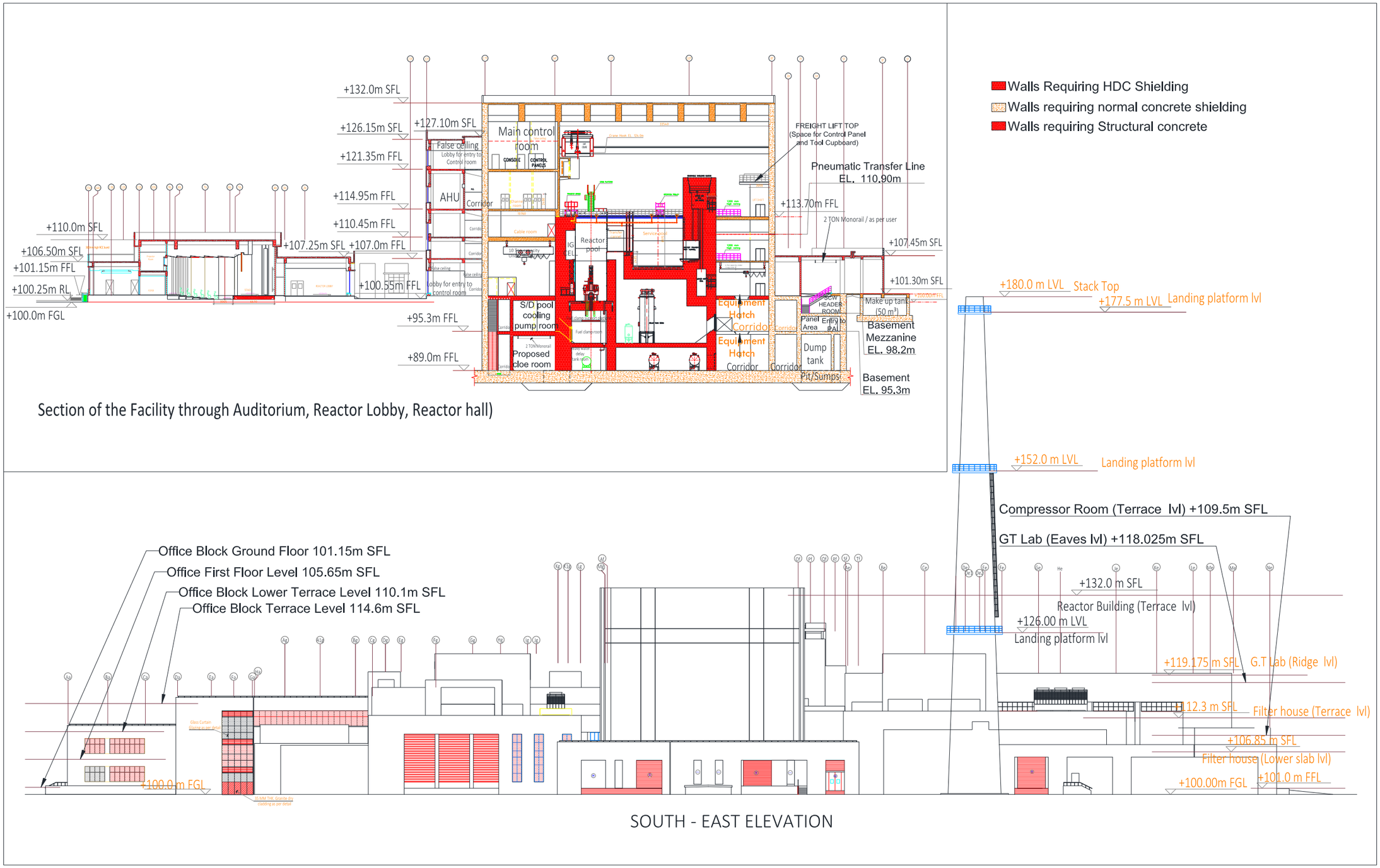

Figure-11: HFRR Facility South-East Elevation and Section View

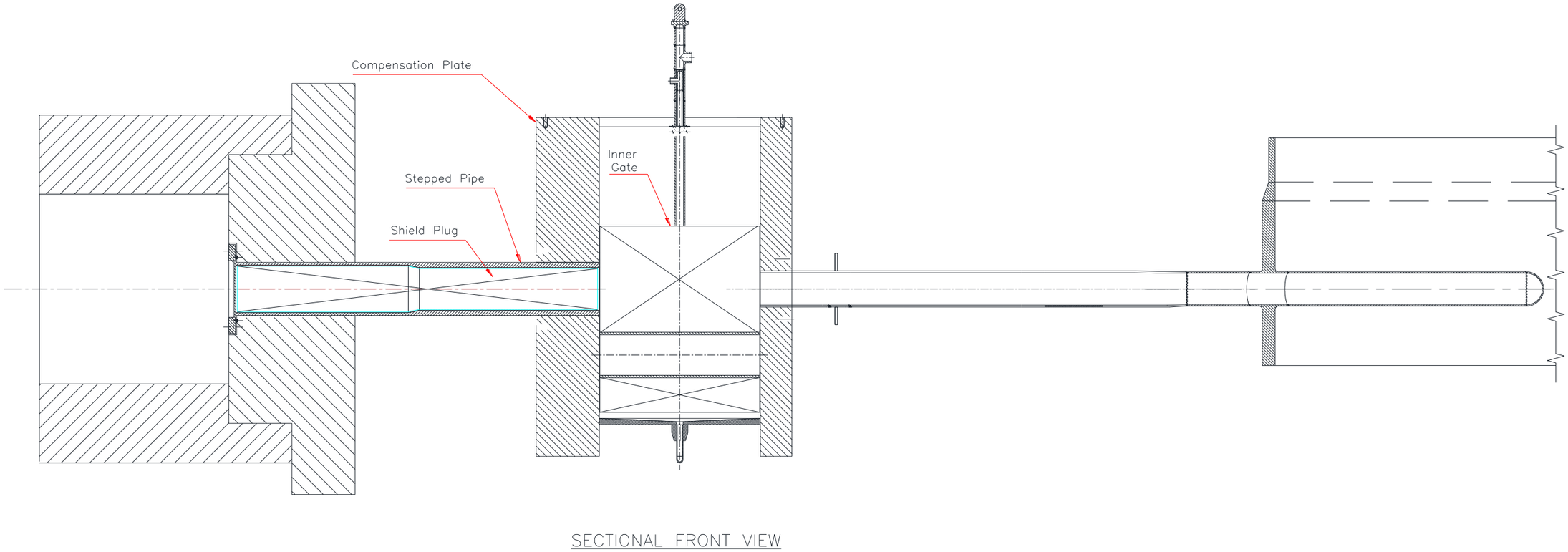

Figure 12: Typical Beam tube Assembly arrangment (Sectional Elevation)

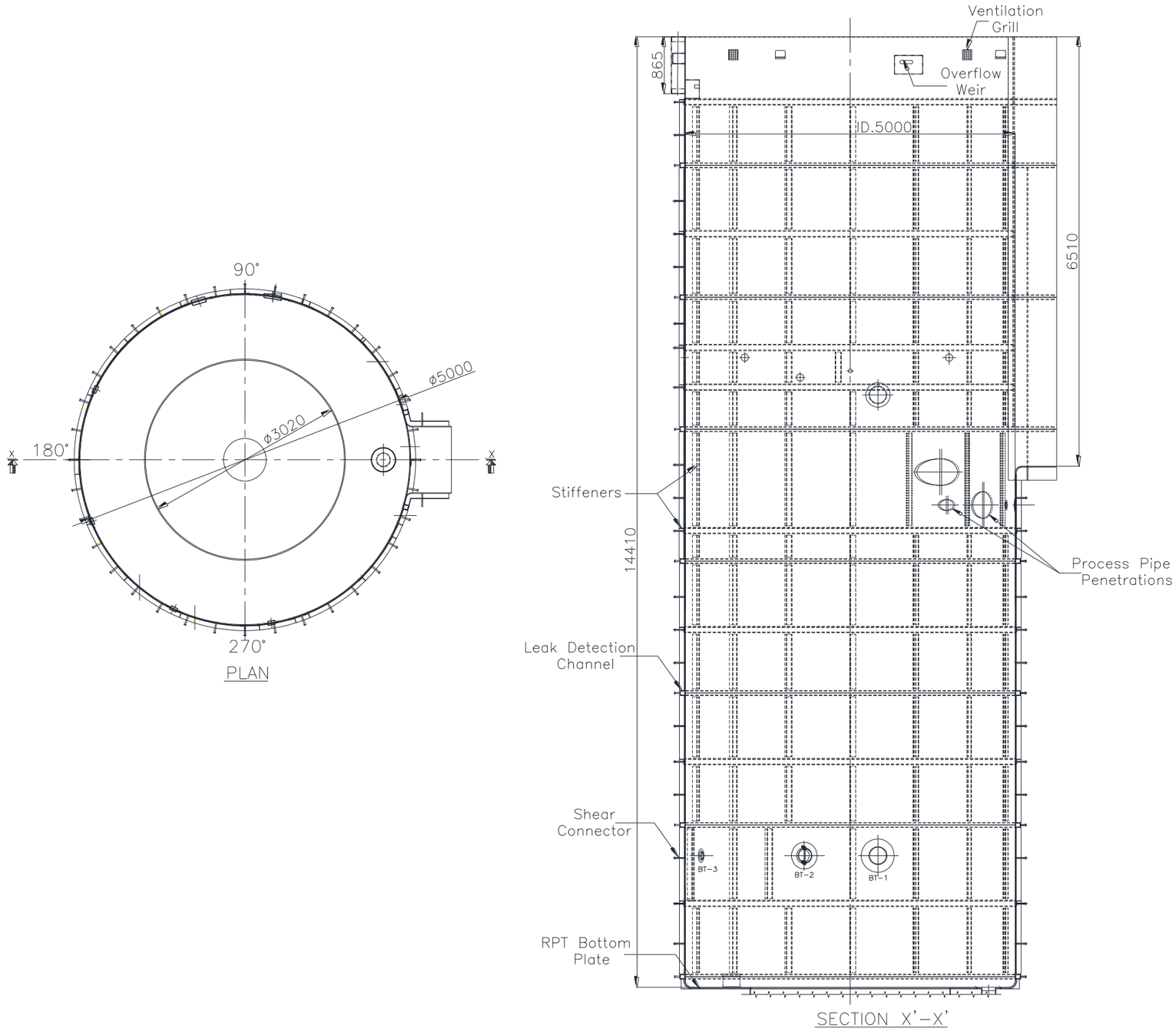

Figure-13: Preliminary Sketch of General Arrangement of Reactor Pool Tank

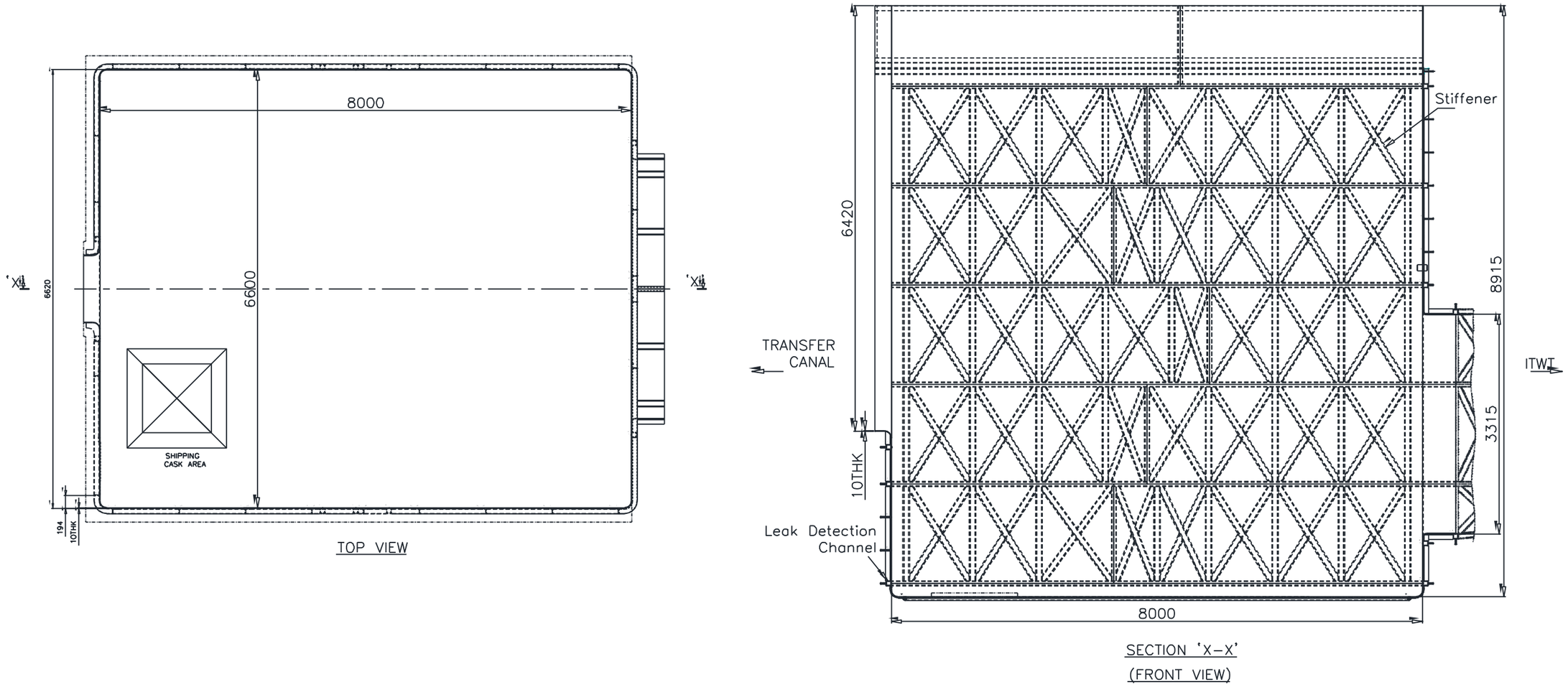

Figure-14: Preliminary Sketch of General Arrangement of Service Pool Tank

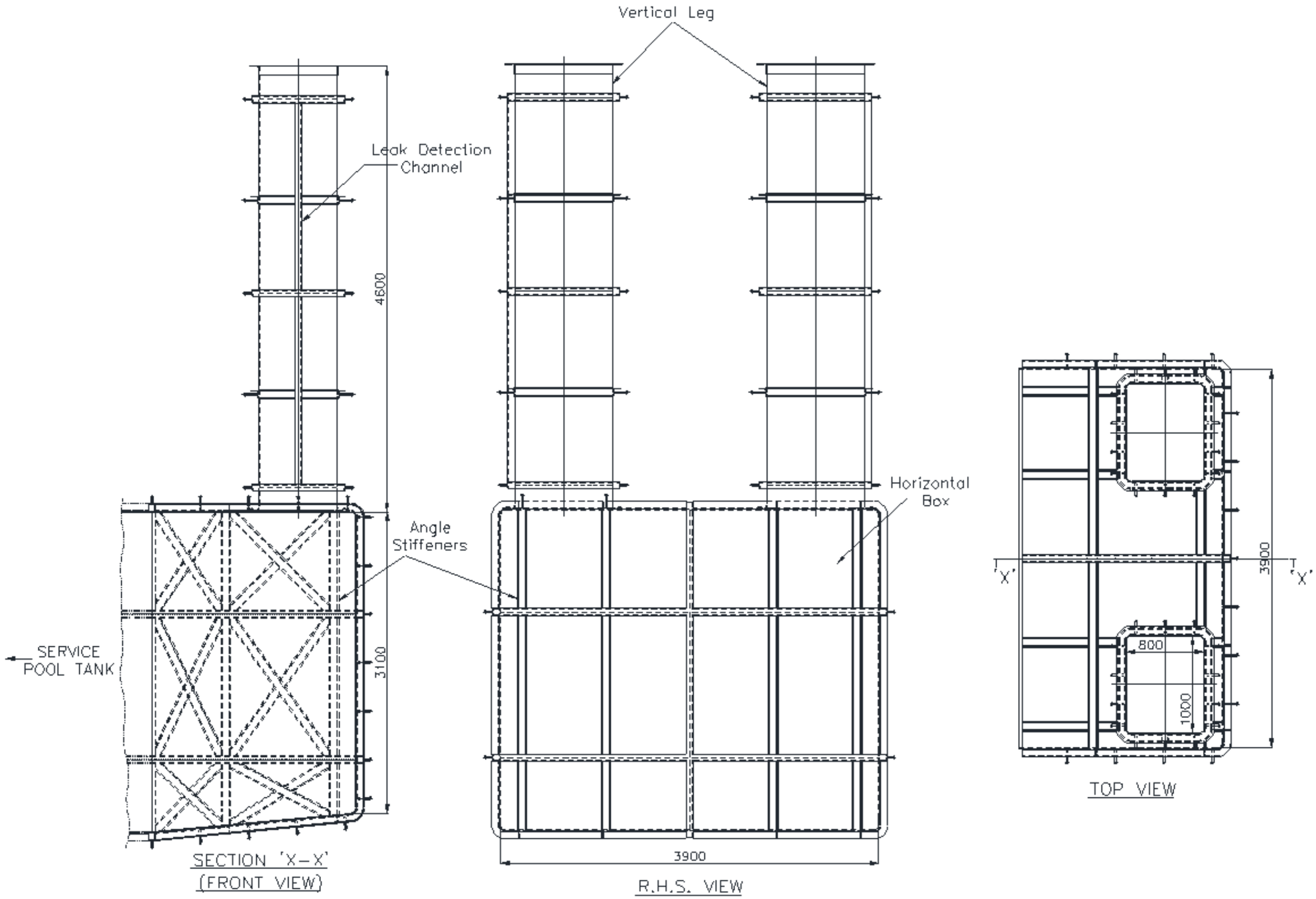

Figure 15: Preliminary Sketch of General Arrangement of ITWT

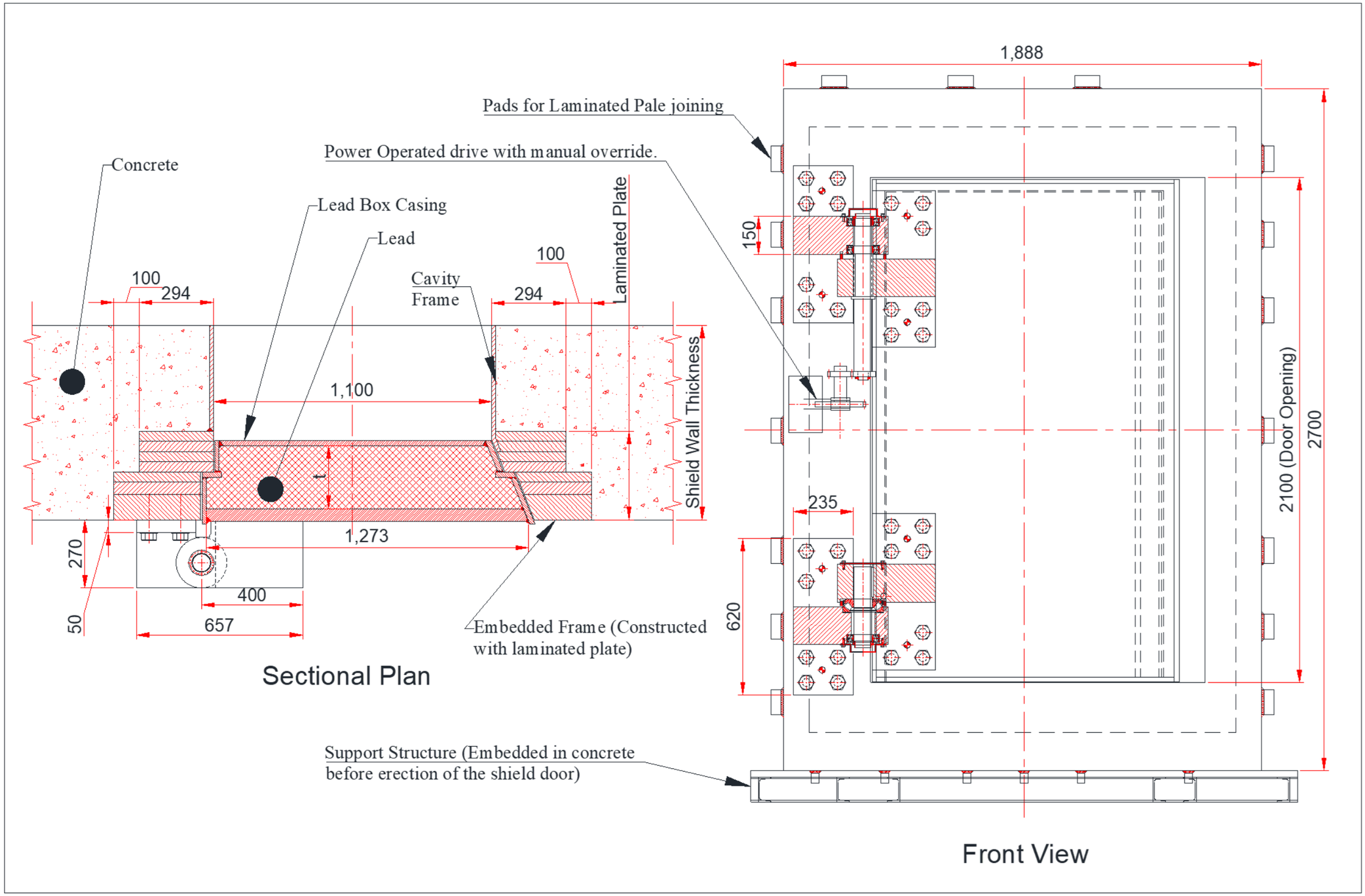

Figure-16: General arrangementsn of Shield Doors

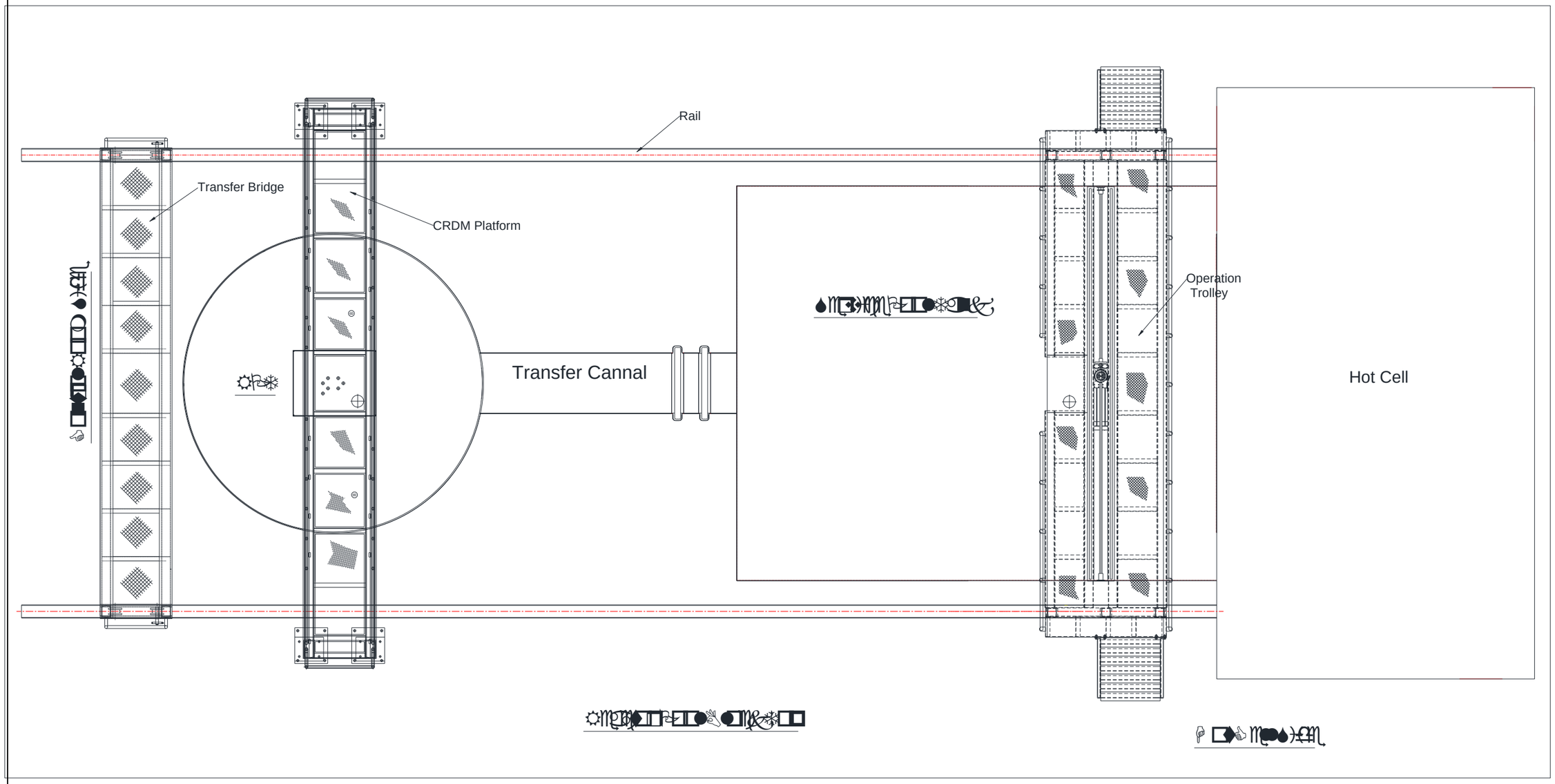

Figure-17: Reactor Trolleys and CRDM Platform at the top of the Reactor Pool Block

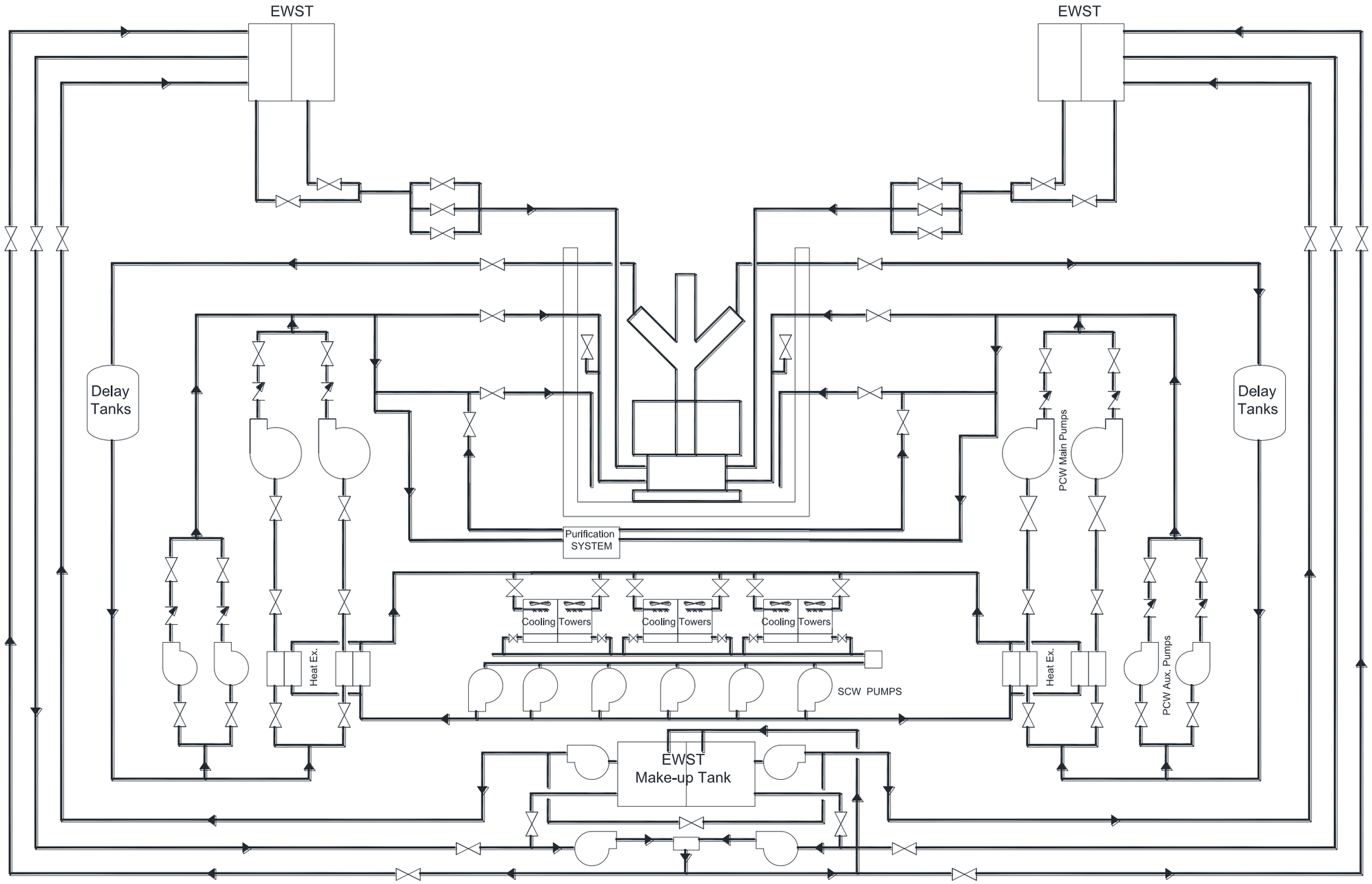

Figure-18: Flow sheets of Primary Coolant System (PCW) and Secondary Cooling Water System (SCW)

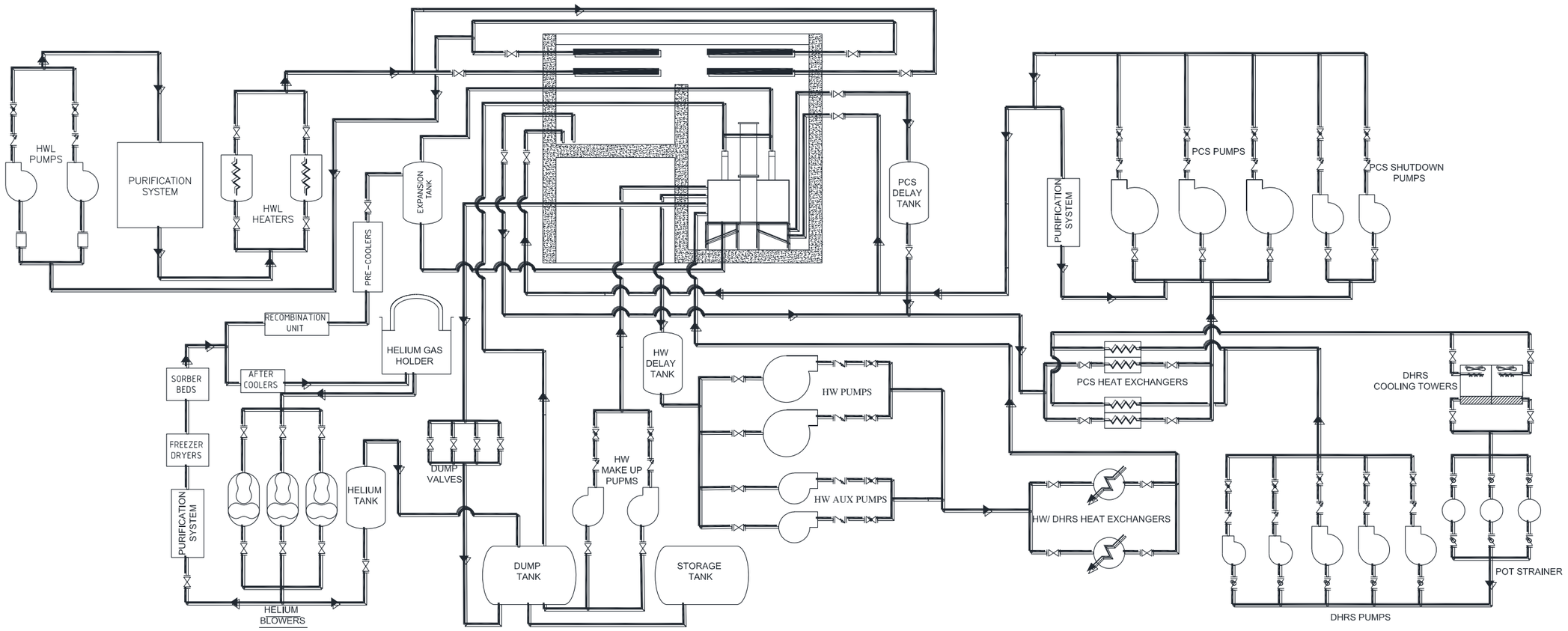

Figure-19: Flow sheets of Pool Cooling System (PCS)., Decay Heat Removal System, HW Reflector System, Hot Water Layer System, Helium Cover Gas System

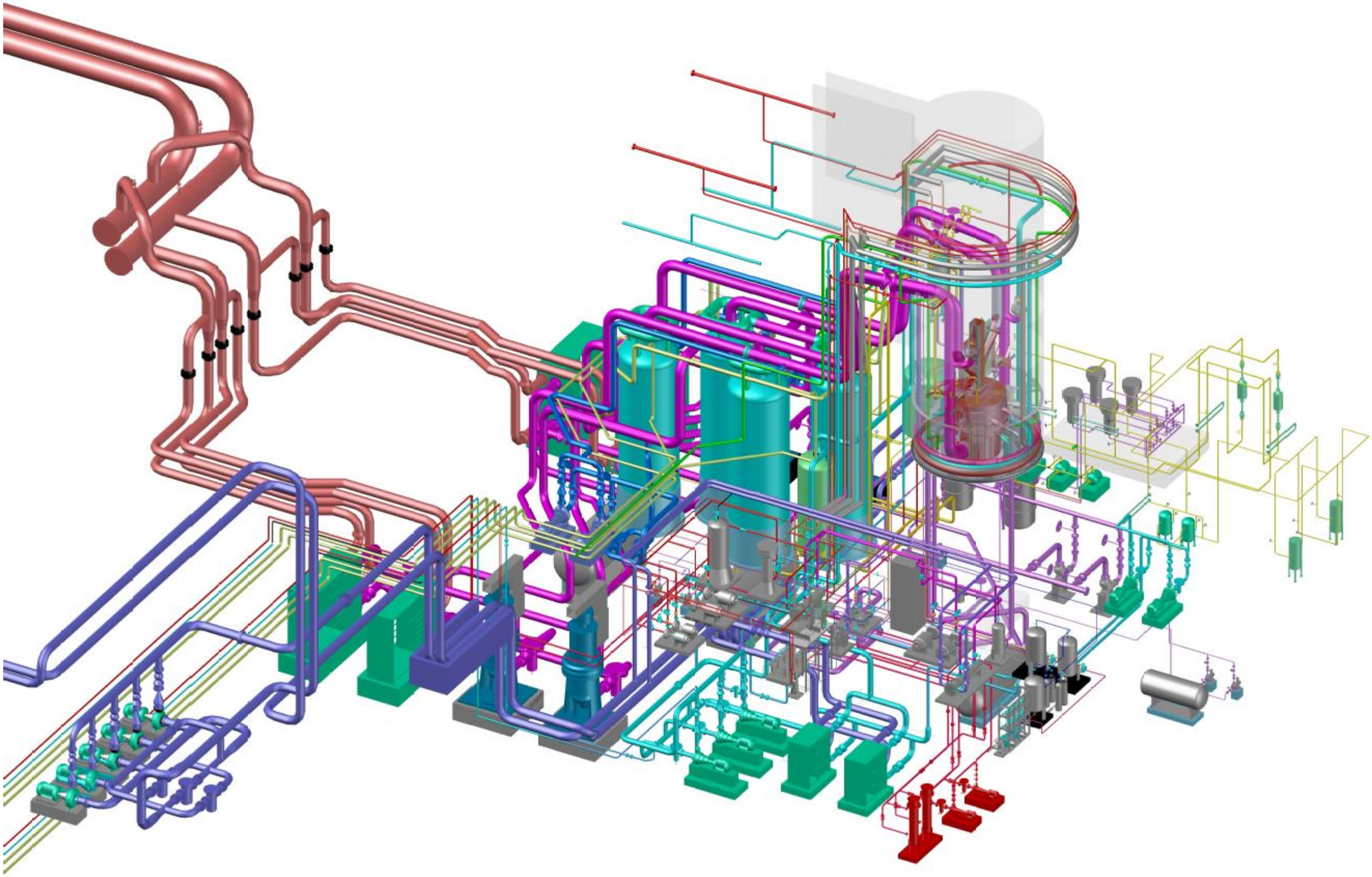

Figure-20: Equipment & Piping Layout in the Reactor Building

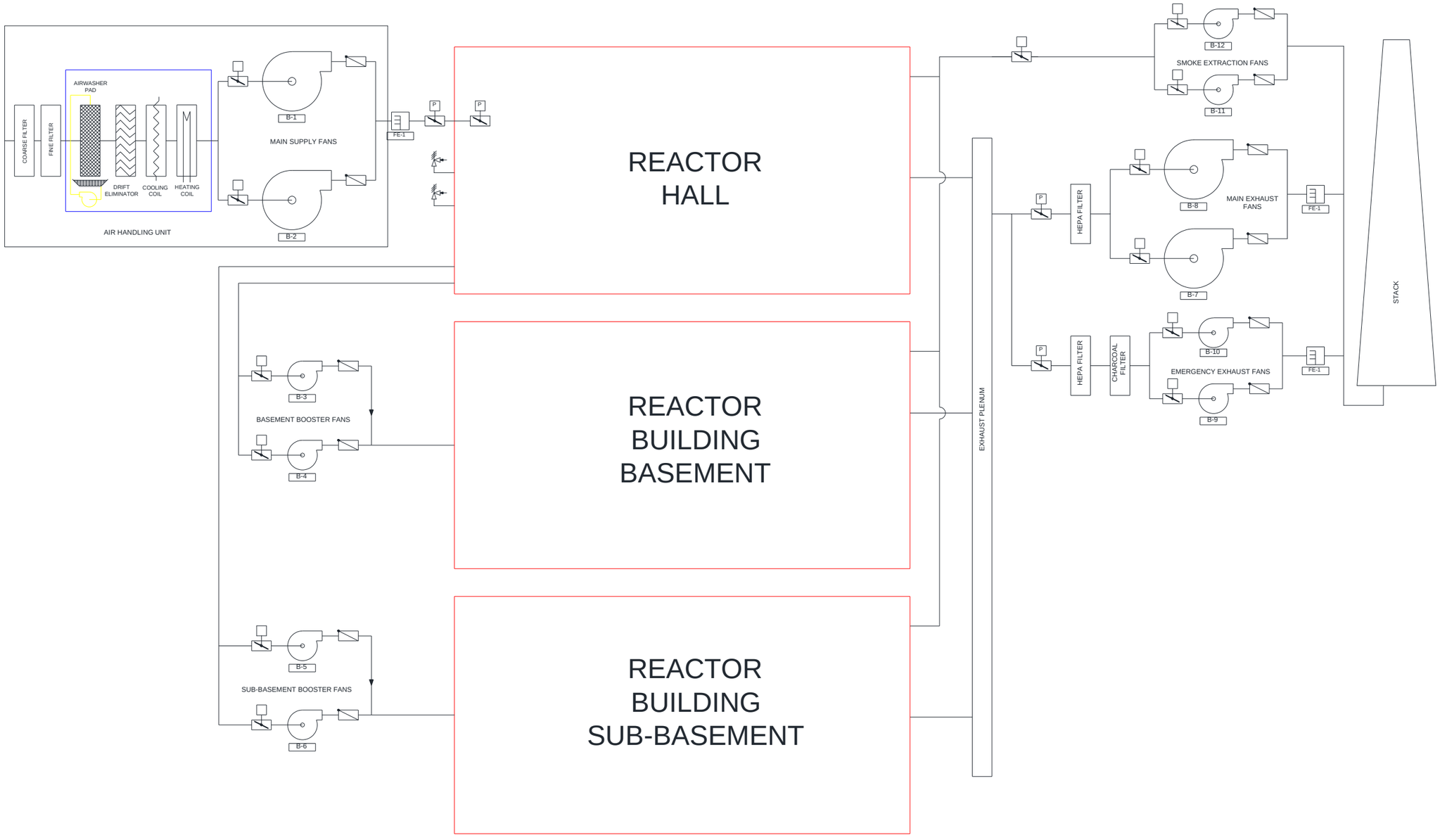

Figure-21: Schematic of Reactor Building AC & VS Flowsheet

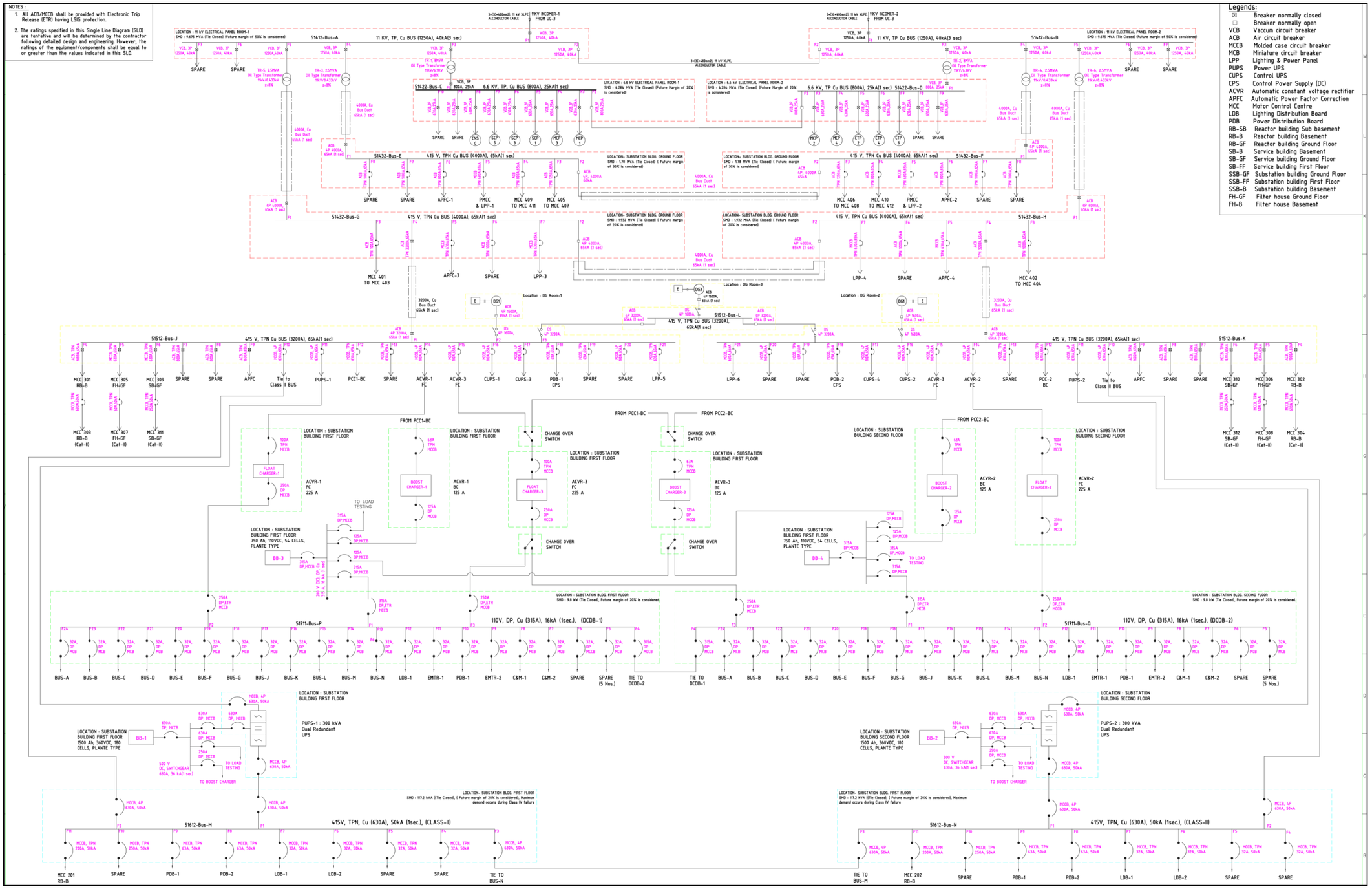

Figure-22: Indicative SLD of Plant Electrical Power Supply System

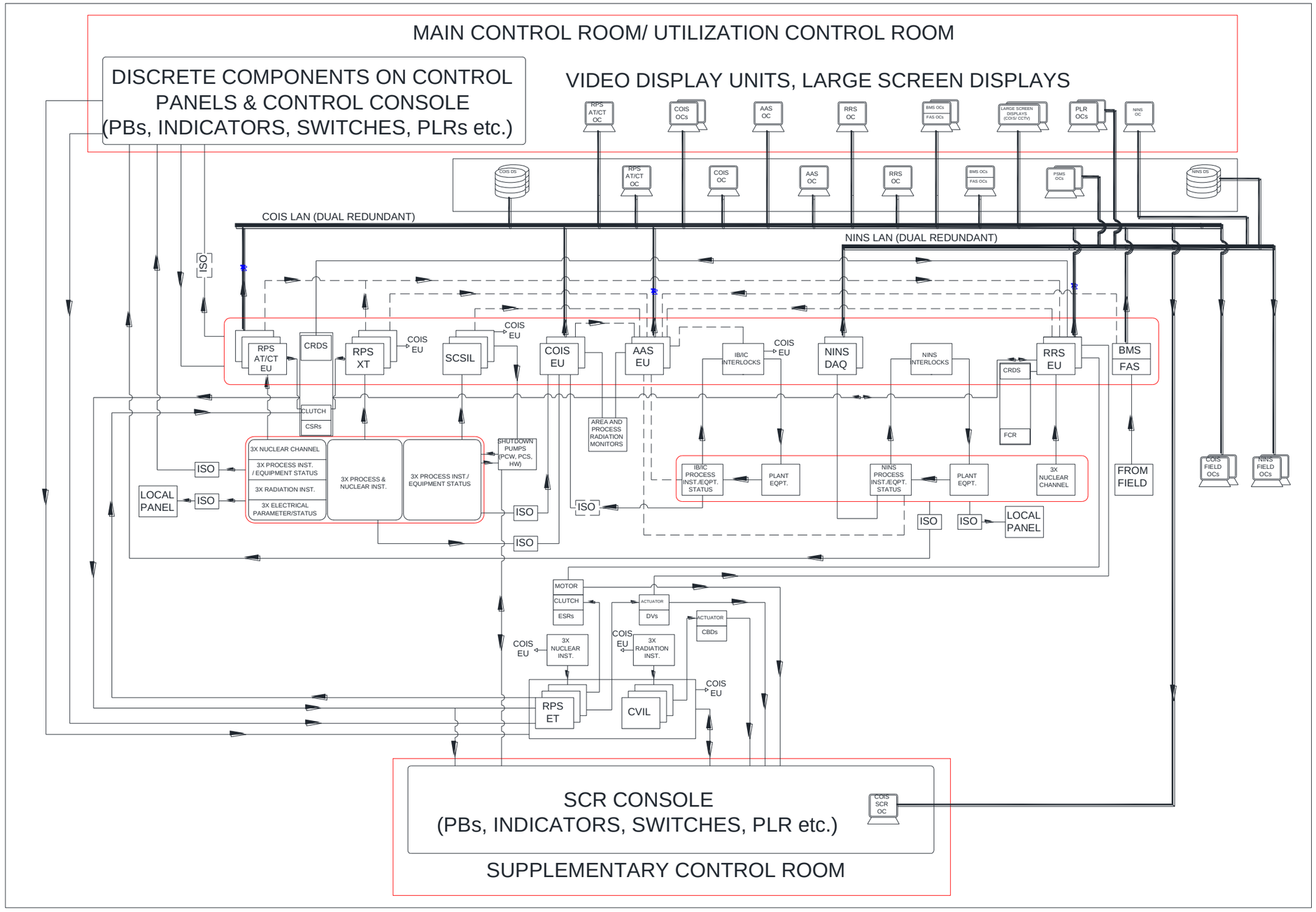

Figure 23: Overall I&C Architecture

12.0 Tentative Bill of Quantities (BOQ)

This section provides a list of equipment /components /materials / instruments, etc. related to Engineering, Procurement and Construction (EPC) Tender for establishment of a Research Reactor Facility namely "High Flux Research Reactor (HFRR)" at BARC (V) site, Vishakhapatnam, Andhra Pradesh.

A tentative BOQ is shown below in Table 8 *for the sole purpose to enable the bidder to assess the quantum of work involved. The* ***BOQ shall be treated as tentative*** *and is subject to change in the Stage-II tender as well as after the Contractor's Detail Engineering is completed.*

Tentative break-up of the EPC Contract value, indicating the approximate cost distribution among various work categories, is given below. The percentages represent the estimated share of the total contract cost attributable to each type of works and do not indicate the physical quantum of work involved.

(i) Design, Engineering & Documentation: 3 %

(ii) Civil Works: 54%

(iii) Mechanical, Process & Auxiliary systems: 22%

(iv) Electrical, Control & Instrumentation: 21%

Table 8 List of Tentative Bill of Quantities (BOQ)

Sr. No.	Item Description	Quantity
M1	**Civil Works Module**	
	M1-S1, S2 & S3: BOQ for Main Plant Civil Works, Auxiliary Building Civil Works and Misc. Civil Works	
	The BOQ of Civil Works Module shall be as per Table-2 "Elevations and Floor Areas of the HFRR Buildings" of this document (Clause 4.0, Civil works : Page no. 19)	
M2	**Mechanical Works Module**	
	M2-S1: BOQ for Reactor Core Components	
	Reactor Core Components will be supplied as FIM (Free issue material) by the purchaser. However, erection of these components is in the scope of the contractor	
	M2-S2: BOQ for Beam Tube Assemblies, Inner Gates& Grillage	
1	Shield Plug and Housing (embedded in concrete made of Iron CS, Borated wood composite and overall weight of 270 kg) 1575 mm long and diameter based on the corresponding Beam Tube Size	6.0 Nos.
2	Inner gate Housing (Embedded in concrete made of CS; dimensions 506 x 590 x350 and overall weight of 1200 kg)	6.0 Nos.

Sr. No.	Item Description	Quantity
3	Chase Plugs (Embedded in concrete made of CS and concrete; approx. Dimensions of 850 x 600 x 460 with overall weight of 500 kg)	30.0 Nos.
4	Inner Gate Chase (Embedded in concrete of dimensions 3800 x 630 x 490 with overall weight of 850 kg)	6.0 Nos.
5	Various spool pipes to be welded at site made of Al and SS for 100NB, 200NB and 250 NB pipe sizes (total length approx. 6m)	6 m
6	Dual SS- 304 Bellows 5 Nos. for 100 NB and 2 Nos for 200 NB and 2 No for 250 NB pipe size (3 ply, 0.5mm thk); length= 400 mm (including tangent length)	9.0 Nos.
7	Inner Gate made of Lead, Iron, Boral Sheet of 5 mm at front and top (Dimensions 600 x 500 x 350 with weight of 350 kg)	7.0 Nos.
8	Inner Gate operating Mechanism (Hoisting wire rope and moving drum mechanism with instruments made of SS and CS) installed in IG cell room	7.0 Nos.
9	Beam Tube Shutter and rotating Mechanism with Trolley (Made of CS, Borated wood and lead composite having Rack and pinion gearbox, movable trolley on Linear Motion Guide rails with manual override and instruments with overall weight of complete assembly ~25 tonnes)	2.0 Nos.
	M2-S3: BOQ for Pool Tanks & Leak Detection System	
1	Reactor Pool Tank (RPT)- 14.41 m H, 5.0 m ID, vertical wall thickness 10 mm /25 mm, bottom plate thk. -25 mm.	1.0 Nos.
2	Service Pool Tank (SPT)-8.915 m H, 6.6 m W, 8.0 m L, Vertical wall thk. -10 mm, bottom plate thk.- 25 mm.	1.0 Nos.
3	Transfer Canal (TC)-6.51 m H, 1.0 m W, 4.2 m L, Thk. 25 mm/10 mm. ITWT- 7.7 m H, 3.9 m W, 2.6 m L, thk. 10 mm along with Shear connectors, Leak detection channels / pipes and stiffeners	1.0 Nos.
	Note: Over all weight of all the components (RPT+ SPT + TC+ ITWT+ LDS+ Shear Connectors) is 130 Ton and Material of construction is SS 304L	
	M2-S4: BOQ for Shielded Casks, Shielded Doors and Compensation Blocks	
1	UHC Room lead door with CS frame of Overall Size of 1750 x 2100 x320 thk; (Lead Weight=13.2 tonne; Steel weight with frame=6.3 tonne)	2.0 Nos.
2	IG cell Room lead door with CS frame of Overall Size of 1800 x 2900 x (350 lead thk+ 100 thk with 5% Borated HDPE) (Lead Weight=20 tonne; Steel weight with frame=10 tonne)	1.0 Nos.
3	Heavy water Expansion tank Room lead door with CS frame of	1.0 Nos.

Sr. No.	Item Description	Quantity
	Overall Size of 1450 x 2500 x 210 thk (Lead Weight=8.5 tonne; Steel weight with frame= 4 tonne)	
4	LHC Room lead door with CS frame of Overall Size of 1750 x 3400 x250 thk; (Lead Weight=16.5 tonne; Steel weight with frame=7 tonne)	1.0 Nos.
5	GT Chase Room lead door with CS frame of Overall Size of 1800 x 2900 x250 thk; (Lead Weight=14.5tonne; Steel weight with frame=6 tonne)	2.0 Nos.
6	UHC Room lead door with CS frame of Overall Size of 1450 x 2500 x210 thk; (Lead Weight=8.5 tonne; Steel weight with frame=4 tonne)	1.0 Nos.
7	HW Ion exchanger lead door with CS frame of Overall Size of 1450 x 2500 x210 thk; (Lead Weight=8.5 tonne; Steel weight with frame=4 tonne)	1.0 Nos.
8	HW heat exchanger Room lead door with CS frame of Overall Size of 1525 x 2600 x250 thk; (Lead Weight=11.5 tonne; Steel weight with frame=5 tonne)	1.0 Nos.
9	Aux Pump Room lead door with CS frame of Overall Size of 1525 x 2600 x250 thk; (Lead Weight=11.5 tonne; Steel weight with frame=5 tonne)	2.0 Nos.
10	FTL Room lead door with CS frame	2.0 Nos.
11	Delay tank Room lead door with CS frame of Overall Size of 1800 x 2900 x450 thk; (Lead Weight=26.5 tonne; Steel weight with frame=13.5 tonne)	1.0 Nos.
12	PCW Heat exchanger Room lead door with CS frame of Overall Size of 1525 x 2600 x250 thk; (Lead Weight=11.5 tonne; Steel weight with frame=5 tonne)	2.0 Nos.
13	Pool Cooling System Room lead door with CS frame of Overall Size of 1450 x 2500 x210 thk; (Lead Weight=8.5 tonne; Steel weight with frame=4 tonne)	1.0 Nos.
14	Hot Water Layer Room lead door with CS frame of Overall Size of 1450 x 2500 x210 thk; (Lead Weight = 8.5 tonne; Steel weight with frame = 4 tonne)	1.0 Nos.
15	CTL Room lead door with CS frame	1.0 Nos.
16	HW pit and drain tank Room lead door with CS frame of Overall Size of 1450 x 2500 x210 thk; (Lead Weight=8.5 tonne; Steel weight with frame = 4 tonne)	1.0 Nos.
17	HW Pump Room lead door with CS frame of Overall Size of 1800 x 2900 x (250 lead thk+ 100 thk 5% Borated HDPE); (Lead Weight = 14.5 tonne; Steel weight with frame = 6 tonne)	1.0 Nos.
18	HW dump tank Room lead door with CS frame of Overall Size of	1.0 Nos.

Sr. No.	Item Description	Quantity
	1800 x 2900 x (250 lead thk+ 100 thk5%BoratedHDPE); (Lead Weight=14.5 tonne; Steel weight with frame=6 tonne)	
19	HW Delay Room lead door with CS frame of Overall Size of 1525 x 2600 x250 thk; (Lead Weight=11.5 tonne; Steel weight with frame=5 tonne)	1.0 Nos.
20	Shipping Cask for fuel of 6400 m outer diameter and 2000 m height; (lead weight 5 tonne; steel weight 3 tonne)	1.0 Nos.
21	SS 304 compensation block in heavy water pipeline niche in FLS room (150 mm thick, 2000 mm width and 5500 mm height)	1.0 Nos.
22	Hot cell compensation block (SS block 450 mmx2000 mmx950 mm filled with lead) (lead weight 9.5 tonne)	2.0 Nos.
	M2-S5: BOQ for Fuelling Machine and Fuel Transfer System	
	BOQ after detailed design by the contractor based on conceptual design & sketches	
	M2-S6: BOQ for Spent and Irradiation Assembly Transfer System (SIATS)	
A	**PLM**	
1	EP plate for hoist support frame of material IS 2062 Gr-B having overall size of 1mx0.7mx10 mm thk with weight 75 kg and location is Inside UHC above ITWT	1.0 Nos.
2	EP plate for shaft support frame of material IS 2062 Gr-B having overall size of 0.5mx0.3mx10 mm thk with weight 15 kg and location is Inside UHC	1.0 Nos.
3	Pipe EP for extension shaft of material IS 2062 Gr-B having overall size of 90NB SCH10, 1400L with weight 10 kg and location is Through UHC wall (front)	1.0 Nos.
4	EP plate for motor support frame of material IS 2062 Gr-B having overall size of 0.8mx0.7mx10 mm thk with weight 50 kg and location is Outside UHC	1.0 Nos.
5	EP plate for trolley locking mechanism of material SS 304L having overall size of 0.25mx0.2mx15mm thk with weight 8 kg and location is at UHC floor	1.0 Nos.
6	EP plate for tension sensor of material SS 304L having overall size of 0.15mx0.1mx10 mm thk with weight 2 kg and location is at UHC floor	2.0 Nos.
7	EP plate for pulley of material IS 2062 Gr-B having overall size of 0.5mx0.3mx10 mm thk with weight 15 kg and location is Inside Hot cell	2.0 Nos.
8	Pipe EP for cables/ tubing of material IS 2062 Gr-B having overall size of 30NB SCH40, 1400L with weight 5 kg and location is	1.0 Nos.

Sr. No.	Item Description	Quantity
	Through UHC front wall	
B	**SAM**	
9	USB Mounting EP plate of material IS 2062 Gr-B having overall size of 1 m x 0.25 m x 20 mm thk with weight 40 kg and location is Pool side UHC outer wall	2.0 Nos.
10	Bush Housing Mounting EP plate of material SS 304L having overall size of 600 mm X 400 mm X 10 mm thk with weight 20 kg and location is Pool side UHC outer wall	2.0 Nos.
11	Track Plate Support Structure Mounting EP plate of material SS 304L having overall size of 400 mm X 400 mm X 10 mm thk with weight 13 kg and location is Inside the cave region floor and pool bottom	11.0 Nos.
12	LSB Support Frame Mounting EP plate of material SS 304L having overall size of 400 mm X 400 mm X 10 mm thk with weight 13 kg and location is Inside the cave region floor and pool bottom	4.0 Nos.
	M2-S7: BOQ for Operation Trolley & Transfer Bridge	
1	Operation Trolley with runway rail: Width 2.2m, Span7.64m. With finished weight of approximately 7.5 tons MOC SS 304 L. It shall have driven mechanism (servo motor) operated by remote control and local control panel.	1.0 Nos.
2	Transfer Bridge with runway rail: Trolley Width 1.0 m, Span 7.64m. With finished weight of approximately 5.0 tons. MOC SS 304 L. It shall have driven mechanism (servo motor) operated by RRC and local control panel.	1.0 Nos.
	M2-S8: BOQ for Master Slave Manipulators	
	No BOQ. It will be FIM from purchaser.	
	M2-S9: BOQ for Radiation Shielding Window	
1	RSW EP for hot cell of dimension 2mx2mx1.5m; MOC MS	4.0 Nos.
	M2-S10: BOQ for Hot Cell Equipment	
1	In cell EOT crane with single failure proof design with span of 2.6 m and bay length of 3.2 m and capacity 1 ton	2.0 Nos.
2	2-ton Capacity monorail for bay length 2.5m	1.0 Nos.
3	Tray rod racks of SS 304 (MoC) of 30 mm thickness with half bearing.	4.0 Nos.
4	Horizontal gate in hot cell with mechanism and fixed lead block (SS block of 300 mm thickness filled with lead; Steel weight 2.6 tonne; lead weight 13 tonne)	2.0 Nos.
5	UHC trolley to carry 3 ton shielding cask of dimension 1mx1.6m with drive mechanism	2.0 Nos.
6	LHC trolley to carry 8-ton shipping cask of dimension 1mx2.1m with	1.0 Nos.

Sr. No.	Item Description	Quantity
	drive mechanism	
7	Pneumatic transfer line of 40NB sch 40 pipe of SS 304 in the concrete	2.0 Nos.
8	Transfer Chute of 400NB 40 sch pipe of SS 304 to connect UHC to LHC	2.0 Nos.
	M2-S11: BOQ for Material Handling Equipment	
1	Reactor Building EOT Crane with Single failure proof design, with Span of 28m, Lift 35m and bay length of 34m and Capacity of 30/5tonnes	1.0 Nos.
2	Filter House EOT crane with single failure proof design with Span of 17.1m, bay length 23m and capacity of 12Ton	
3	GT Lab EOT Crane with double girder design, Span of 32m and bay length of 60 m and Capacity of 10 tonnes	1.0 Nos.
4	Service Building EOT Crane with double girder design, Span of 11.1M and bay length of 21m and Capacity of 5tonnes	1.0 Nos.
5	Electrically Operated Underslung Crane for Researcher's Area Span of 9.0 m and bay length of 29m and Capacity of 10tonnes	1.0 Nos.
6	Electrically Operated Underslung Crane for Researcher's Area with single girder design, Span of 7.5m, Lift of 3.1m and bay length of 6.5m and Capacity of 5tonnes	1.0 Nos.
7	Manual Monorail crane: for FTL Hatch Area of 5ton capacity with 3.8m min lift and monorail (ISMB-300) monorail girder beam. length 7.4m	1.0 Nos.
8	Manual Monorail crane: for Guide Tube Cave of 2ton capacity, 3.1m lift and monorail (ISMB-250) length 9.0 m	2.0 Nos.
9	Manual Monorail crane: for IGC Area of 1.5ton capacity, 3.75m lift and monorail (ISMB-250) length 20.0 m	1.0 Nos.
10	Manual Monorail crane: for FTL Room-1 of 2ton capacity, 3.95m lift and monorail (ISMB-250) length 16.0 m	2.0 Nos.
11	Manual Monorail crane: for FTL Room-2 of 2ton capacity, 3.95m lift and monorail (ISMB-250) length 20.0 m	2.0 Nos.
12	Manual Monorail crane: for S/D Pool Cooling Room of 2ton capacity, 3.95m and monorail (ISMB-250) length 6.8m	1.0 Nos.
13	Manual Monorail crane: for Cover Gas Sys Area of 1ton capacity and monorail (ISMB-250) length 8.0 m	1.0 Nos.
14	Manual Monorail crane: for PCW Aux. Pump Room of 2ton capacity, 3.95m lift and monorail (ISMB-250) length 16m total for both monorails	2.0 Nos.
15	Manual Hoist in fuel clamp room: 3 Ton capacity, 4.35m lift	
16	Manual Monorail crane: for Pool Cooling Sys. Room of 2ton	2.0 Nos.

Sr. No.	Item Description	Quantity
	capacity, 4.55m lift and monorail (ISMB-250) length 12.2m total for both monorails	
17	Manual Monorail crane: for HWL Sys. Room of 2ton capacity, 4.55m lift and monorail (ISMB-250) length 7.3m	1.0 Nos.
18	Manual Monorail crane: for CTL Loop Room of 2ton capacity, 4.55m lift and monorail (ISMB-250) length 25.0 m	1.0 Nos.
19	Manual Monorail crane: for HW Drain Pump Room of 2ton capacity, 4.55m lift and monorail (ISMB-250) length 8.0 m	1.0 Nos.
20	Manual Monorail crane: for Reflector Coolant Sys Room of 2ton capacity, 4.55m lift and monorail (ISMB-250) 10.0 m total length	2.0 Nos.
21	Manual Monorail crane: for HW Dump Tank Room of 2ton capacity, 2.7m lift and monorail (ISMB-250) 7.60 m total length	1.0 Nos.
22	Manual Monorail crane: for PCW purification Pump Room of 1.5ton, 4.0 m lift capacity and monorail (ISMB-250) 6.0 m length	1.0 Nos.
23	Manual Monorail crane: for Effluent Pump Area of 2ton capacity, 4.55m lift and monorail (ISMB-250) 20.0 m length	2.0 Nos.
24	Manual Monorail crane: for Trench Area of 5ton capacity, 2.5m lift and monorail (ISMB-300) 35.0 m total length	2.0 Nos.
25	Manual Monorail crane: for First Floor: Fan Area of 1.5ton capacity, 5m lift and monorail (ISMB-250) 53.0 m total length	4.0 Nos.
26	Manual Monorail crane: for Mezzanine Floor Area of 2ton capacity, 9.3m lift and monorail (ISMB-250) 9.4m length	1.0 Nos.
27	Manual Monorail crane: for He Compressor Area of 5ton capacity, 6.2m and monorail (ISMB-300) 65.0 m length	1.0 Nos.
28	Manual Monorail crane: for Service Building Area of 2ton capacity, 3.45m lift and monorail (ISMB-250) 24.0 m total length	2.0 Nos.
29	Manual Monorail crane: for Service Building Top Floor of 2ton capacity, 12.8m and monorail (ISMB-250) 34.0 m total length	1.0 Nos.
30	Manual Monorail crane: for DG Room of 10ton capacity, 6.2m lift and monorail (ISMB-600) 40.0 m total length	3.0 Nos.
31	Manual Monorail crane: for CT SCW Pump/Strainer of 5ton capacity, 5.45m lift and monorail (ISMB-300) 200.0 m total length	2.0 Nos.
32	Manual Monorail crane: for Service Water Pumps of 2ton capacity, 8.5m lift and monorail (ISMB-250) 40.0 m length	1.0 Nos.
	M2-S12: BOQ for Control Rod Drive Mechanism Platform	
1	CRDM Platform with overall dimensions of 1.2 m wide x 9.6 m long x 3.0 m height and over all finished weight of 6.0 tons. MOC Stainless Steel 304L.	1.0 Nos.
	M2-S13: BOQ for Sealing Doors and Air Locks (PAL & VAL)	

Sr. No.	Item Description	Quantity
1	Pool isolation gate structure MOC: plates and shapes of SS 304L, Weight: 1.7Ton	2.0 Nos.
2	Inflatable seals, continuous EPDM inflatable seal of 15m length	4.0 Nos.
3	PAL (personnel air lock) and its accessories, instrumentation and control systems, MOC: IS 2062, E250 Gr. BR, Weight: 2 Ton	8.0 Nos.
4	VAL (Vehicle Airlock) and its accessories, instrumentation and control systems, MOC: IS 2062, E250 Gr. BR, Weight: 10 Ton	2.0 Nos.
	M2-S14: BOQ for SS Delay Tanks/ Dump Tanks/ Storage Tanks	
	BOQ Covered with the respective Process system (Primary coolant system, Pool Cooling System and Heavy Water System, etc.) in this document	
	M2-S15: BOQ for Fuel Locking System	
1	Fuel Locking Mechanism assemblies along with instrumentation (CNC Machining with Close tolerance required, consist of bellows, springs, rods, pipes and special profile grapplers) approx. weight of 30 kg made of SS-304 L and 17-ph and projected dimensions of dia 55mm x 3.5m long to be installed in FC Room	30.0 Nos.
2	FLS Hydraulic and pneumatic System (Consist of accumulator, 0.5Hp pump, hydraulic piston cylinders for each assembly, solenoid valves, check valves filter. Hydraulic and pneumatic Power Pack etc.)	1.0 Nos.
3	FLS Support Structure for mounting hydraulic cylinders, pneumatic cylinders and instruments and Working Platform made of CS or better material with approx. weight of 500kg	1.0 Nos.
	M2-S16: BOQ for Ion Chamber/Fission Counter Housings assembly & mechanisms and Lead Blocks	
1	L Shaped Aluminium Box filled with Lead Block (ASTM B749-03, UNS No. L50049) of weight 1.5Ton,	4.0 Nos.
2	IC Lead Block Support Structure, MOC SS 304L, Weight: 13 Ton (combined weight for all the four Lead Block Support Structure)	1 Nos.
3	IC Housing, Al-5052-O; (Detector Cable Housing– OD: 36mm, ID: 26mm, Length: 14mtr, etc. Detector Housing – OD: 102mm, ID: 92mm, Length: 800 mm, etc.,) Weight: 30 Kgs each	16 Nos.
4	IC Adjustment Mechanism, MOC: SS 304L, Weight 250Kgs	4 Nos.
5	Pipe having Size OD 72m Material: Al-5052-O (Boron <10ppm)	25.0 m
6	Pipe having Size OD 72m Material: SS304L	10.0 m
	M2-S17: BOQ for Service Pool Storage Racks	
1	Fuel Storage Racks of dimensions 800 x 800 x 2360 height made of Al-5154; welded Structure of weight approx. 350kg (machining and close tolerance required and Consist of Aluminium Plates and	26.0 Nos.

Sr. No.	Item Description	Quantity
	angles)	
2	Cadmium Plates (Size 780 mm x 850 mm x 2.5mm)	150.0 Nos.
	M2-S18: BOQ for NTD Silicon Facility	
1	NTD silicon rotating device made up of Al 6061 T6 having two tubes of 250 mm dia, 5mm thickness and 2.5m height and 40 kg weight.	1.0 Nos.
2	NTD silicon support structure made up of SS 304L (weight ~ 200 kg)	1.0 Nos.
	M2-S19: BOQ for Fabrication, Inspection & Testing of Process Equipment and Piping	
	It is a guiding document, there is no supplies under this submodule	
	M2-S20: BOQ for EPs, Support Structures	
1	RPT embedded support structure MOC; IS 2062, E250 Gr. BR, Total Weight of all the equipment-3.6 Ton	1.0 Nos.
2	SPT embedded support structure MOC; IS 2062, E250 Gr. BR, Total Weight of all the equipment-6 Ton	1.0 Nos.
3	Pool Block EPs for mounting various support structures: 10 Ton Carbon Steel & 2 Ton SS 304L	1 Nos.
	M2-S21: BOQ for Irradiation Assemblies	
1	High Flux Zone Multi capsule assembly with upper portion made of SS and remaining of Al (Projected dimensions of 62 dia and 1680 mm height with overall weight of approx. 15 kg)	14.0 Nos.
2	Medium Flux Zone Multi capsule assembly with upper portion made of SS and remaining of Al (Projected dimensions of 72 dia and 1680 mm height with overall weight of approx. 15 kg)	10.0 Nos.
3	Low Flux Zone single capsule assembly with upper portion made of SS and remaining of Al (Projected dimensions of 59 dia and 1680 mm height with overall weight of approx. 15 kg)	14.0 Nos.
4	Fission Molly assembly with upper portion made of SS and remaining Al (Projected dimensions of 72 dia and 1680 mm height with overall weight of approx. 15 kg)	5.0 Nos.
	M2-S22: BOQ for Intermediate Storage Racks	
	BOQ as per the drawing attached in the document	
	M2-S23: BOQ for FTL Handling	
1	PLUG BODY, Material: ASTM A 564 GRADE 630, and overall size is: Dia 153mm, length 147mm with weight 9 KG	1.0 Nos.
2	ROD EXTENSION, Material: ASTM A 276 SS-304, and overall size is: Dia 75mm, length 300 mm with weight 14 KG	1.0 Nos.
3	KEY, Material: ASTM A 564 GRADE 630, and overall size is: 42x22x14 mm	1.0 Nos.
4	SHCS M6 X 0.75, Material: ASTM A 193 GRADE B8	2.0 Nos.

Sr. No.	Item Description	Quantity
5	SPRING, Material: ASTM A 313 SS-302, and overall size is: OD 14mm, Wire dia 1.6mm	2.0 Nos.
6	LATCH, Material: ASTM A 564 GRADE 630, and overall size is: Dia 15mm, length 20 mm	2.0 Nos.
7	LATCH RETAINER, Material: ASTM A 564 GRADE 630, and overall size is: Dia 20 mm, length 6mm	2.0 Nos.
8	OUTER SLEEVE, Material: ASTM A 564 GRADE 630, and overall size is: Dia 220 mm, length 160 mm with weight 16 KG	1.0 Nos.
9	SEAL, Material: EPDM - PARKER MAKE ORING + BACKUP RING	1.0 Nos.
10	END PART A, Material: ASTM A 564 GRADE 630, and overall size is: 120x120x62mm with weight 1.6KG	2.0 Nos.
11	SPRING, Material: ASTM A 313 SS-302, and overall size is: OD 15mm, Wire dia 1.6mm	1.0 Nos.
12	BALL DIA 6.35 (0.250"), Material: AISI 440C	4.0 Nos.
13	PLUNGER, Material: ASTM A 564 GRADE 630, and overall size is: Dia 31mm, length 64mm	1.0 Nos.
14	END PART B, Material: ASTM A 564 GRADE 630, and overall size is: 75x75x25mm	1.0 Nos.
15	INTERMEDIATE PART, Material: ASTM A 240 SS-304L, and overall size is: 120x120x140 mm with weight 3.5KG	1.0 Nos.
16	PNEUMATIC ACTUATOR, Material: STD, and overall size is: BORE:1" (25MM) STROKE: 8MM approx., SINGLE ACTING, SPRING ACTUATED RETRACT	1.0 Nos.
17	SHCS M12X1.25, 20 mM LONG, Material: ASTM A 193 GRADE B8	8.0 Nos.
18	LOWER TOOL 1, Material: SS304L, and overall size is: DN50 x SCH40 pipe 5200 mm long with weight 36KG	1.0 Nos.
19	COUPLER, Material: ASTM A 564 GRADE 630, and overall size is: Dia 110 mm, length 111mm with weight 4KG	1.0 Nos.
20	UPPER TOOL 1, Material: SS304L, and overall size is: DN50 x SCH40 pipe 2500 mm long with weight 16KG	1.0 Nos.
21	EYE BOLT M20, Material: STD	1.0 Nos.
22	PIN Diameter 5 mm, 20 mm long, Material: SS	1.0 Nos.
23	ROTATION PART A, Material: ASTM A 564 GRADE 630, and overall size is: Dia 206mm, length 75mm with weight 3KG	2.0 Nos.
24	LOWER TOOL 2, Material: SS304L, and overall size is: DN50 x SCH40 pipe 5340 mm long with weight 36KG	1.0 Nos.
25	COUPLER, Material: ASTM A 564 GRADE 630, and overall size is: Dia 110 mm, length 111mm with weight 4KG	1.0 Nos.
26	UPPER TOOL 2, Material: SS304L, and overall size is: DN50 x	1.0 Nos.

Sr. No.	Item Description	Quantity
	SCH40 pipe 2420 mm long with weight 16KG	
27	ROTTATION PART B, Material: ASTM A 564 GRADE 630, and overall size is: Dia 70 mm, length 100 mm plus handle with weight 3KG	1.0 Nos.
28	EYE BOLT M20, Material: STD	1.0 Nos.
29	PIN DIA 5MM, LONG 20 MM, Material: SS	1.0 Nos.
30	GRIPPING HEAD, Material: ASTM A 564 GRADE 630, and overall size is: Dia 75mm, length 150 mm with weight 1.5KG	1.0 Nos.
31	POSITION PLUG BODY, Material: SS304L, and overall size is: DN40 x SCH 80 pipe 4000 mm long with weight 32KG	1.0 Nos.
32	ROLL PIN DIA 5MM, Material: SS	1.0 Nos.
33	RAM 1, Material: ASTM A 564 GRADE 630, and overall size is: Dia 72mm, length 500 mm plus end flange with weight 11KG	1.0 Nos.
34	PIN DIA 5MM, LONG 20 MM, Material: SS	4.0 Nos.
35	PLUNGER, Material: ASTM A 564 GRADE 630, and overall size is: Dia 47mm, length 500 mm with weight 2.5KG	1.0 Nos.
36	PNEUMATIC ACTUATOR, Material: STD, and overall size is: BORE:40 mM, STROKE: 15MM approx., SINGLE ACTING, SPRING ACTUATED EXTEND	1.0 Nos.
37	ACTUATOR HOUSING, Material: ASTM A 240 SS-304L, and overall size is: 130x130x200 mm with weight 7KG	1.0 Nos.
38	SHCS M12X1.25, 30 mM LONG, Material: ASTM A 193 GRADE B8	8.0 Nos.
39	LOWER TOOL, Material: SS304L, and overall size is: DN50 x SCH80 pipe 2150 mm long with weight 24KG	1.0 Nos.
40	INTERMEDIATE TOOL, Material: SS304L, and overall size is: DN50 x SCH80 pipe 2850 mm long with weight 28KG	1.0 Nos.
41	PIN DIA 5MM, LONG 20 MM, Material: SS	2.0 Nos.
42	COUPLER, Material: ASTM A 564 GRADE 630, and overall size is: Dia 110 mm, length 111mm with weight 4KG	2.0 Nos.
43	UPPER TOOL, Material: SS304L, and overall size is: DN50 x SCH80 pipe 2800 mm long with weight 24KG	1.0 Nos.
44	EYE BOLT M24, Material: STD	1.0 Nos.
45	VBLOCK HOUSING, Material: IS 2062, and overall size is: 460 x 365 x 420 mm with weight 52KG	2.0 Nos.
46	VBLOCK, Material: IS 2062, and overall size is: 390 x 150 x 70 mm with weight 23KG	4.0 Nos.
47	SHCS M20X2.5, 260 mM LONG, Material: STD	4.0 Nos.
48	BRACKET 2, Material: IS2062, and overall size is: 350 x110 x 40 mm with weight 2.6KG	4.0 Nos.

Sr. No.	Item Description	Quantity
49	SWING BOLT M16, 50 mM LONG, Material: STD	12.0 Nos.
50	NUT M16, Material: STD	12.0 Nos.
51	PIN, Material: IS 2062, and overall size is: Dia 15mm, length 68mm with weight 0.1KG	12.0 Nos.
52	CIRCLIP 16X1 N IS:3075, Material: STD	24.0 Nos.
53	POSITION PLUG HOLDING BRACKET, Material: ASTM A 240 SS-304L, and overall size is: 180 x 200 x 600 mm with weight 35KG	1.0 Nos.
54	EP plate, Material: ASTM A 240 SS-304L, and overall size is: 300 x 700 mm x 15 mm thk with weight 25 KG	1.0 Nos.
55	LEVER, Material: ASTM A 564 GRADE 630, and overall size is: 175 x 55 x 15 mm with weight 1KG	1.0 Nos.
56	PIN, Material: ASTM A 479 SS-304L, and overall size is: Dia 20 mm, length 45mm with weight	1.0 Nos.
57	HALF PLATE A, Material: IS 2062, and overall size is: 300 x 150 x 45 mm with weight 5KG	1.0 Nos.
58	HALF PLATE B, Material: IS 2062, and overall size is: 300 x 150 x 45 mm with weight 5KG	1.0 Nos.
59	SHCS M20X2.5, 30 mM LONG, Material: STD	4.0 Nos.
60	STOOL, Material: IS 2062, and overall size is: 500 x 500 x 745 mm with weight 58KG	1.0 Nos.
61	BRACKET 1, Material: IS 2062, and overall size is: 500 x110 x 40 mm with weight 3.3KG	2.0 Nos.
62	SWING BOLT M16, 50 mM LONG, Material: STD	4.0 Nos.
63	NUT M16, Material: STD	4.0 Nos.
64	PIN, Material: IS 2062, and overall size is: Dia 15mm, length 68mm with weight 0.1KG	4.0 Nos.
65	CIRCLIP 16X1 N IS:3075, Material: STD	8.0 Nos.
66	JACK, Material: STD, and overall size is: (LOAD CAP-300KG & STROKE-15MM APPORX) with weight _	1.0 Nos.
67	ROD, Material: IS2062, and overall size is: Dia 40 mm, length 350 mm with weight 3KG	2.0 Nos.
68	ROD BRACKET, Material: IS2062, and overall size is: 340 x 84 x 15 mm with weight 2.3KG	2.0 Nos.
69	JACK STOOL, Material: IS2062, and overall size is: 175 x 175 x 260 mm with weight 5.5KG	1.0 Nos.
70	NUT M30X2, Material: STD	2.0 Nos.
	M2-S24: Not in EPC Scope	
	M2-S25: BOQ for Reactor Building & Radiation Shielding Walls Embedded Penetrations	

Sr. No.	Item Description	Quantity
1	Process System Embedded Penetration EPs in Containment Walls	4.0 Nos.
2	Secondary Coolant System pipe embedded penetration	2.0 Nos.
3	Emergency Water Storage Tank (EWST) pipe embedded penetration	2.0 Nos.
4	PCW Purification System pipe embedded penetration	2.0 Nos.
5	Pool Cooling System Purification pipe embedded penetration	2.0 Nos.
6	Hot Water Layer System Purification pipe embedded penetration	2.0 Nos.
7	Fire Hydrant System pipe embedded penetration	2.0 Nos.
	Electrical Cable Embedded Penetration EPs list in Containment Walls	
8	Class III + Class IV (Div-1) Cables: RB Basement	as per design
9	Class III + Class IV (Div-2) Cables: RB GF	as per design
10	Class I + Class II (Div-1) Cables: RB GF	as per design
11	Class I + Class II (Div-2) Cables: RB GF	as per design
12	6.6kV (Div-1) Cables: RB Basement	as per design
13	6.6kV (Div-2) Cables: RB Basement	as per design
14	Spare Electrical Cable Penetrations	as per design
	C&I Cable Embedded Penetration EPs in list Containment Walls	
15	Class IA C&I Cables × 3: Cable Room Wall	as per design
16	Class IB/IC C&I Cables × 3: Cable Room Wall	as per design
17	NINS C&I Cables × 2: Cable Room Wall	as per design
18	Class IA/IB/IC C&I Cables × 3: RB Basement	as per design
19	NINS C&I Cables × 1: RB Basement	as per design
20	Spare C&I Cable Penetrations	as per design
	Ventilation Duct Embedded Penetration EPs list in Containment Walls	
21	Inlet Duct Penetration: In Reactor Hall above FFL	1.0 Nos.
22	Outlet Duct Penetration: Between RB and Filter house above FFL	1.0 Nos.
	Neutron Guide Penetration EPs list in Containment Walls	
23	Neutron Guides for BT-1: Sq. 1.57 x 1.57m	1.0 Nos.
24	Neutron Guides for BT-2: Oblique 1.57 x 1.57m	1.0 Nos.
	Other System Pipe Penetration EPs list in Containment Walls	
25	Compressed Air Supply pipe embedded penetration: RB Basement	2.0 Nos.
26	Compressed Air supply line for RB pressure testing pipe embedded penetration: RB Ground floor	4.0 Nos.
27	Liquid Nitrogen pipe embedded penetration, embedded pipe size shall be decided based on the insulation thickness: RB Basement	1.0 Nos.

Sr. No.	Item Description	Quantity
28	Chilled Water for helium system (DN 50 pipe size) embedded pipe size shall be decided based on the insulation thickness: RB Basement	2.0 Nos.
29	CNS Cryogenic pipe embedded penetration: RB above FFL	2.0 Nos.
30	CNS Hydrogen Line (Size: DN-150 & EP pipe DN-200)	2.0 Nos.
	Other Spare Penetration EP Assemblies list in Containment Walls	
31	DN 400 Pipe EP	2.0 Nos.
32	DN 300 Pipe EP	2.0 Nos.
33	DN 200 Pipe EP	2.0 Nos.
34	DN 100 Pipe EP	2.0 Nos.
35	1m Dia Opening Big size EP	2.0 Nos.
36	800 m Dia Opening Big size EP	2.0 Nos.
	RB & GT Lab Gr Floor EPs and Spare Plate EPs in walls	
37	Plate EP: 300 x 300 x 16Thk: RB Gr. Floor (101m EL.)	2500.0 Nos.
38	Plate EP: 250 x 250 x 10Thk: RB wall	1500.0 Nos.
	Pool Block Walls: 300 x 300 x 16Thk: Vertical Walls	150.0 Nos.
	M2 TS-004 BOQ for SS Liner (3mm-6mm thick plate)	
1	Fuel clamp room Dia-6.2 m; height 5.5 m	1.0 Nos.
2	Upper hot cell 2.5 m x3 m x3.6 m	1.0 Nos.
3	UHC cave 1 mx3.5 mx1 m	1.0 Nos.
4	Lower hot cell 7 mx1.5mx4.65m	1.0 Nos.
5	Dump tank 18.9 m x4.81 m x5.5 m	1.0 Nos.
6	Sump tank 8 mx8 mx2 m	1.0 Nos.
7	Trenches 0.9 m x0.9m x Total 700 m (approx.)	1.0 Nos.
8	Total Backing structure for liner (IS:2062 E250A)	85 ton
M3	**Reactor Process & Utilization Systems Module**	
	M3-S1: BOQ for Primary Coolant System	
1	Main Coolant Pump (MCP) with motor: SS Centrifugal, Vertical with flywheel, Flow: 14,000 Lpm, Head 70 mWC, Flywheel inertia 125 kg-m2, Motor of 1500 rpm, 300kW rating	4.0 Nos.
2	Auxiliary Coolant Pump (XCP) with motor: SS Centrifugal, Horizontal Flow: 5000 Lpm, Head 20 mWC, Motor of 1500 rpm, 28kW rating	4.0 Nos.
3	PCW Purification Pump with motor: SS Centrifugal, Horizontal, Flow: 900 Lpm, Head 25mWC, Motor of 1500 rpm, 7.0kW rating	3.0 Nos.
4	EWST Makeup Pump with motor: SS Centrifugal, Horizontal, Flow: 1200 Lpm, Head 60 mWC, Motor of 1500 rpm, 22.0kW rating	2.0 Nos.
5	EWST Purification Pump with motor: SS Centrifugal, Horizontal,	2.0 Nos.

Sr. No.	Item Description	Quantity
	Flow: 150 Lpm, Head 25mWC, Motor of 1500 rpm, 1.5kW rating	
6	PCW/SCW Heat Exchanger: Gasketed Plate Type, ASME Sec III Div-1, ND, Heat Load: 11MW, Primary Flow: 14,000 Lpm, Secondary Flow: 22,000 Lpm, Maximum Pressure drop in Primary side: <3mWC	4.0 Nos.
7	PCW Delay Tank: Vertical cylindrical, Volume: 32000 litre, No. of perforated plates: 3, 20 mm circular perforations arranged in a triangular pitch of 30 mm, Internal Diameter of Tank: 2.3 m, Height of Tank: 8m, Fluid handled: DM water, SS 304L	4.0 Nos.
8	MCP Suction Strainer: Flow: 14,000 Lpm, SS304L, 40 mesh, Line size 350 NB	4.0 Nos.
9	XCP Suction Strainer: Flow: 5,000 Lpm, SS304L, 40 mesh, Line size 200 NB	4.0 Nos,
10	Purification Pump Suction Strainer: Flow: 900 Lpm, SS304L, 40 mesh, Line size 150 NB	3.0 Nos.
11	EWST makeup Pump Suction Strainer: Flow: 1200 Lpm, SS304L, 40 mesh, Line size 100 NB	2.0 Nos.
12	EWST purification Pump Suction Strainer: Flow: 150 Lpm, SS304L, 40 mesh, Line size 50 NB	2.0 Nos.
13	Main Coolant Purification Resin Trap: Y Strainer: Flow: 900LPm, SS304L, 200-micron Mesh	2.0 Nos.
14	EWST Purification Resin Trap: Y Strainer: Flow: 150LPm, SS304L, 200-micron Mesh	1.0 Nos.
15	PCW & EWST Purification Filters: Flow: 300Lpm, Micron rating:5, SS304L	10.0 Nos.
16	PCW & EWST Purification Mixed Bed Ion Exchangers: Flow:200 Lpm, SS304L	14.0 Nos.
17	PCW Reactor outlet: Flanged and motorized gate valve of size DN400 in Radiation environment	2.0 Nos.
18	Siphon Break Line (PCW Reactor outlet): Flanged and motorized gate valve of size DN80 in Radiation environment	4.0 Nos.
19	PCW/SCW Heat Exchanger Inlet: Flanged and manual gate valve of size DN350 in Radiation environment	4.0 Nos.
20	PCW/SCW Heat Exchanger Bypass Valve: Flanged and manual gate valve of size DN300 in Radiation environment	4.0 Nos.
21	PCW/SCW Heat Exchanger Outlet: Flanged and manual gate valve of size DN350 in Radiation environment	4.0 Nos.
22	Primary Coolant Pump Suction: Flanged and gate valve of size DN300 in Radiation environment	4.0 Nos.
23	Primary Coolant Pump Discharge: Flanged and manual Swing	4.0 Nos.

Sr. No.	Item Description	Quantity
	Check valve with dash pot and limit switches of size DN250 in Radiation environment	
24	Primary Coolant Pump Discharge: Flanged and Motorized globe valve of size DN250 in Radiation environment	4.0 Nos.
25	PCW Reactor Inlet: Flanged and manual Swing Check Valve with Dash pot and limit switches of size DN400 in Radiation environment	2.0 Nos.
26	PCW Reactor Inlet: Flanged and motorized gate valve of size DN400 in Radiation environment	2.0 Nos.
27	Siphon Break Line (PCW Reactor Inlet): Flanged and motorized gate valve of size DN80 in Radiation environment	4.0 Nos.
28	Natural Circulation Valve: Flanged and passive own design of size DN300 in Radiation environment	2.0 Nos.
29	PCW Bypass Inlet: Flanged and motorized Globe Valve of size DN150 in Radiation environment	2.0 Nos.
30	Siphon Break Line (PCW Bypass): Flanged and motorized gate valve of size DN80 in Radiation environment	4.0 Nos.
31	PCW Purification Inlet (Reactor Building side): Flanged and motorized gate valve of size DN150 in Radiation environment	2.0 Nos.
32	PCW Purification Inlet (Filter House side): Flanged and motorized gate valve of size DN150 in Radiation environment	2.0 Nos.
33	PCW Purification pump suction: Flanged and manual gate valve of size DN150 in Radiation environment	3.0 Nos.
34	PCW purification pump bypass: Flanged and manual gate valve of size DN150 in Radiation environment	2.0 Nos.
35	PCW purification Pump Discharge: Flanged and manual Swing Check Valve of size DN150 in Radiation environment	3.0 Nos.
36	PCW purification Pump Discharge: Flanged and manual globe valve of size DN150 in Radiation environment	3.0 Nos.
37	PCW purification Filter Inlet: Flanged and manual diaphragm valve of size DN50 in Radiation environment	8.0 Nos.
38	PCW purification Filter Inlet, Bypass & Outlet: Flanged and manual Gate valve of size DN150 in Radiation environment	3.0 Nos.
39	PCW purification Filter Outlet: Flanged and manual diaphragm valve of size DN50 in Radiation environment	8.0 Nos.
40	PCW purification Ion Exchanger Inlet: Flanged and manual diaphragm valve of size DN50 in Radiation environment	12.0 Nos.
41	PCW purification Ion Exchanger Bypass & outlet: Flanged and manual Gate valve of size DN150 in Radiation environment	2.0 Nos.
42	PCW purification Ion Exchanger Outlet: Flanged and manual diaphragm valve of size DN50 in Radiation environment	12.0 Nos.

Sr. No.	Item Description	Quantity
43	PCW Purification Outlet (Reactor Building side): Flanged and motorized gate valve of size DN150 in Radiation environment	2.0 Nos.
44	PCW Purification Outlet (Filter House side): Flanged and motorized gate valve of size DN150 in Radiation environment	2.0 Nos.
45	Auxiliary Coolant Pump strainer isolation: Flanged and Manual gate valve of size DN200 in Radiation environment	8.0 Nos
46	Auxiliary Coolant Pump Suction: Flanged and Manual gate valve of size DN200 in Radiation environment	4.0 Nos.
47	Auxiliary Coolant Pump Discharge: Flanged and manual Swing Check Valve with dashpot and limit switches of size DN200 in Radiation environment	4.0 Nos.
48	Auxiliary Coolant Pump Discharge: Flanged and Motorized globe valve of size DN200 in Radiation environment	4.0 Nos.
49	Flanged, manual gate valve (Primary System Drain to Dump tank) of size DN100 in Radiation environment	2.0 Nos.
50	Dump tank to sump tank: Flanged and manual gate valve of size DN150 in Radiation environment	1.0 Nos.
51	EWST - 1 & 2 tank isolation: Flanged and manual gate valve of size DN100 in Nil environment	4.0 Nos.
52	EWST - 1 & 2 opening motorised valves: Flanged and motorized gate valve of size DN100 in Nil environment	2.0 Nos.
53	EWST - 1 & 2 opening pneumatic valves: Flanged and pneumatic gate valve of size DN100 in Nil environment	2.0 Nos
54	EWST - 1 & 2 opening manual valves: Flanged and manual gate valve of size DN100 in Nil environment	2.0 Nos.
55	EWST - 1 & 2 reactor pool inlet check valve: Flanged and manual Swing check valve with dashpot and limit switch of size DN100 in Nil environment	2.0 Nos.
56	EWST - 1 & 2 pool makeup: Flanged and Motorized gate valve of size DN50 in Nil environment	2.0 Nos.
57	EWST - 1 & 2 beam hole gate cooling: Flanged and manual gate valve of size DN25 in Nil environment	2.0 Nos.
58	EWST - 1 & 2 RCU jacket cooling: Flanged and manual gate valve of size DN25 in Nil environment	2.0 Nos.
59	EWST - 1 & 2 Drain: Flanged and Manual gate valve of size DN50 in Nil environment	2.0 Nos.
60	EWST makeup pump discharge: Flanged and manual Swing Check valve of size DN100 in Nil environment	2.0 Nos.
61	EWST makeup pump discharge: Flanged and manual globe valve of size DN100 in Nil environment	2.0 Nos.

Sr. No.	Item Description	Quantity
62	EWST -1 & 2 makeup isolation valves: Flanged and manual gate valve of size DN50 in Nil environment	6.0 Nos.
63	EWST -1 & 2 purification isolation valve: Flanged and motorized gate valve of size DN50 in Nil environment	2.0 Nos.
64	EWST purification pump suction: Flanged and manual gate valve of size DN50 in Nil environment	2.0 Nos.
65	EWST purification pump discharge: Flanged and manual Swing Check Valve of size DN50 in Nil environment	2.0 Nos.
66	EWST purification pump discharge: Flanged and manual globe valve of size DN50 in Nil environment	2.0 Nos.
67	EWST purification Filter Inlet & Outlet: Flanged and manual diaphragm valve of size DN50 in Nil environment	4.0 Nos.
68	EWST purification Filter Bypass: Flanged and manual diaphragm valve of size DN50 in Nil environment	1.0 Nos.
69	EWST purification IX Inlet & Outlet: Flanged and manual diaphragm valve of size DN50 in Nil environment	4.0 Nos.
70	EWST purification IX Bypass: Flanged and manual diaphragm valve of size DN50 in Nil environment	1.0 Nos.
71	Makeup tank purification return: Flanged and manual diaphragm valve of size DN50 in Nil environment	1.0 Nos.
72	EWST purification return: Flanged and manual Swing Check Valve of size DN50 in Nil environment	1.0 Nos.
73	PCW/SCW HX Drain & Vent Lines: A one end socket welded other end npt and manual Gate valve of size DN25 in Radiation environment	12.0 Nos.
74	Primary coolant Pumps strainer Drain & Vent Lines: A manual Gate valve of size DN25 in Radiation environment	8.0 Nos.
75	Primary coolant Pumps Drain & Vent Lines: A manual Gate valve of size DN25 in Radiation environment	8.0 Nos.
76	Auxiliary coolant Pumps strainer Drain & Vent Lines: A manual Gate valve of size DN25 in Radiation environment	8.0 Nos.
77	Auxiliary coolant Pumps Drain & Vent Lines: A one end socket welded other end npt and manual Gate valve of size DN25 in Radiation environment	8.0 Nos.
78	PCW purification Pumps strainer Drain & Vent Lines: A manual Gate valve of size DN15 in Radiation environment	8.0 Nos.
79	PCW purification Pumps Drain & Vent Lines: A manual Gate valve of size DN15 in Radiation environment	8.0 Nos.
80	Filter Drain & Vent Valves: A manual Gate valve of size DN15 in Radiation environment	12.0 Nos.

Sr. No.	Item Description	Quantity
81	IX Drain & Vent Valves: A one end socket welded other end npt and manual Gate valve of size DN15 in Radiation environment	12.0 Nos.
82	PCW Reactor Inlet strainer Drain & Vent Valves: A manual Gate valve of size DN25 in Radiation environment	4.0 Nos.
83	PCW Bypass strainer Drain & Vent Valves: A manual Gate valve of size DN15 in Radiation environment	4.0 Nos.
84	EWST pool inlet strainer Drain &Vent Lines: A one end socket welded other end npt and manual Gate valve of size DN15 in Nil environment	4.0 Nos.
85	EWST Makeup Pump Vent Lines: A manual Gate valve of size DN15 in Nil environment	2.0 Nos.
86	EWST purification Pump Drain & Vent Lines: A manual Gate valve of size DN15 in Nil environment	4.0 Nos.
87	EWST purification Pump strainer Drain &Vent Lines: A manual Gate valve of size DN15 in Nil environment	4.0 Nos.
88	EWST Filter Drain & Vent Valves: A manual Gate valve of size DN15 in Nil environment	4.0 Nos.
89	EWST IX Drain & Vent Valves: A one end socket welded other end npt and manual Gate valve of size DN15 in Nil environment	4.0 Nos.
90	Gross Loop Flow measurement orifice element root valves: A manual gate valve of size DN15 in Radiation environment	12.0 Nos.
91	Bypass Loop Flow measurement orifice element root valve: A manual gate valve of size DN15 in Radiation environment	4.0 Nos.
92	Auxiliary coolant Loop Flow measurement orifice element root valve: A manual gate valve of size DN15 in Radiation environment	8.0 Nos.
93	Auxiliary coolant Loop Flow measurement orifice element root valve: A manual gate valve of size DN15 in Radiation environment	8.0 Nos.
94	Purification Loop Flow measurement orifice element root valve: A one end socket welded other end npt and manual gate valve of size DN15 in Radiation environment	4.0 Nos.
95	EWST makeup flow measurement orifice element root valve: A manual gate valve of size DN15 in Nil environment	4.0 Nos.
96	EWST purification flow measurement orifice element root valve: A manual gate valve of size DN15 in Nil environment	2.0 Nos.
97	Reactor outlet pressure element root valve: A manual gate valve of size DN15 in Nil environment	6.0 Nos.
98	PCW/SCW HX Inlet pressure element root valve: A one end socket welded other end npt and manual gate valve of size DN15 in Radiation environment	4.0 Nos.
99	PCW/SCW HX outlet pressure element root valve: A manual gate	4.0 Nos.

Sr. No.	Item Description	Quantity
	valve of size DN15 in Radiation environment	
100	Primary coolant pump suction pressure element root valve: A manual gate valve of size DN15 in Radiation environment	8.0 Nos.
101	Primary coolant pump discharge pressure element root valve: A manual gate valve of size DN15 in Radiation environment	16.0 Nos.
102	Auxiliary coolant pump suction pressure element root valve: A one end socket welded other end npt and manual gate valve of size DN15 in Radiation environment	8.0 Nos.
103	Auxiliary coolant pump discharge pressure element root valve: A manual gate valve of size DN15 in Radiation environment	16.0 Nos.
104	Purification pump suction pressure element root valve: A manual gate valve of size DN15 in Radiation environment	8.0 Nos.
105	Purification pump discharge pressure element root valve: A manual gate valve of size DN15 in Radiation environment	8.0 Nos.
106	Filter common Inlet pressure element root valve: A one end socket welded other end npt and manual gate valve of size DN15 in Radiation environment	2.0 Nos.
107	Filter DP measurement root valve: A manual gate valve of size DN15 in Radiation environment	4.0 Nos.
108	Filter common outlet pressure element root valve: A manual gate valve of size DN15 in Radiation environment	2.0 Nos.
109	IX common inlet pressure element root valve: A manual gate valve of size DN15 in Radiation environment	2.0 Nos.
110	IX DP measurement root valve: A manual gate valve of size DN15 in Radiation environment	4.0 Nos.
111	IX common outlet pressure element root valve: A one end socket welded other end npt and manual gate valve of size DN15 in Radiation environment	2.0 Nos.
112	Reactor Inlet pressure element root: A manual gate valve of size DN15 in Radiation environment	6.0 Nos.
113	EWST makeup pump suction pressure element root valve: A manual gate valve of size DN15 in Nil environment	2.0 Nos.
114	EWST makeup pump discharge pressure element root valve: A one end socket welded other end npt and manual gate valve of size DN15 in Nil environment	2.0 Nos.
115	EWST purification pump suction pressure element root valve: A manual gate valve of size DN15 in Nil environment	2.0 Nos.
116	EWST purification pump discharge pressure element root valve: A manual gate valve of size DN15 in Nil environment	2.0 Nos.
117	EWST Filter common inlet pressure element root valve: A one end	1.0 Nos.

Sr. No.	Item Description	Quantity
	socket welded other end npt and manual gate valve of size DN15 in Nil environment	
118	EWST Filter DP measurement root valve: A manual gate valve of size DN15 in Nil environment	1.0 Nos.
119	EWST Filter common outlet pressure element root valve: A manual gate valve of size DN15 in Nil environment	1.0 Nos.
120	EWST IX common inlet pressure element root valve: A one end socket welded other end npt and manual gate valve of size DN15 in Nil environment	1.0 Nos.
121	EWST IX DP measurement root valve: A manual gate valve of size DN15 in Nil environment	1.0 Nos.
122	EWST IX common outlet pressure element root valve: A manual gate valve of size DN15 in Nil environment	1.0 Nos.
123	PCW Sample points root valve & process lines drain & vent valve: A one end socket welded other end npt and manual gate valve of size DN15 in Radiation environment	25.0 Nos.
124	EWST Sample points root valve & process lines drain & vent valve: A manual gate valve of size DN15 in Radiation environment	4.0 Nos.
125	EWST -1 & 2 level isolation valves: A manual diaphragm valve of size DN15 in Nil environment	6.0 Nos.
126	PCW Purification Inlet conductivity element root valve: A manual gate valve of size DN15 in Radiation environment	2.0 Nos.
127	PCW Purification Outlet conductivity element root valve: A one end socket welded other end npt and manual gate valve of size DN15 in Radiation environment	2.0 Nos.
128	EWST Purification Inlet conductivity element root valve: A manual gate valve of size DN15 in Nil environment	1.0 Nos.
129	EWST Purification Outlet conductivity element root valve: A manual gate valve of size DN15 in Nil environment	1.0 Nos.
130	Coolant Gamma Activity measurement root valve: A manual gate valve of size DN15 in Radiation environment	2.0 Nos.
131	Pipe DN 400 Sch. 40 is of seamless type of SS 304L material	166.0 m
132	Pipe DN 350 Sch. 40 is of seamless type of SS 304L material	100.0 m
133	Pipe DN 300 Sch. 40 is of seamless type of SS 304L material	68.0 m
134	Pipe DN 250 Sch. 40 is of seamless type of SS 304L material	23.0 m
135	Pipe DN 200 Sch. 40 is of seamless type of SS 304L material	65.0 m
136	Pipe DN 150 Sch. 40 is of seamless type of SS 304L material	73.0 m
137	Pipe DN 100 Sch. 40 is of seamless type of SS 304L material	586.0 m
138	Pipe DN 80 Sch. 40 is of seamless type of SS 304L material	62.0 m

Sr. No.	Item Description	Quantity
139	Pipe DN 50 Sch. 40 is of seamless type of SS 304L material	125.0 m
140	Pipe DN 25 Sch. 40 is of seamless type of SS 304L material	70.0 m
141	45° elbow DN 400 Sch 40 is of butt welded type of SS-304L material	2.0 Nos.
142	45° elbow DN 300 Sch 40 is of butt welded type of SS-304L material	6.0 Nos.
143	45° elbow DN 250 Sch 40 is of butt welded type of SS-304L material	8.0 Nos.
144	45° elbow DN 200 Sch 40 is of butt welded type of SS-304L material	5.0 Nos.
145	45° elbow DN 100 Sch 40 is of butt welded type of SS-304L material	5.0 Nos.
146	45° elbow DN 80 Sch 40 is of butt welded type of SS-304L material	6.0 Nos.
147	45° elbow DN 50 Sch 40 is of butt welded type of SS-304L material	5.0 Nos.
148	45° elbow DN 25 Sch 40 is of butt welded type of SS-304L material	12.0 Nos.
149	45° elbow DN 15 Sch 40 is of butt welded type of SS-304L material	13.0 Nos.
150	90° elbow DN 400 Sch 40 is of butt welded type of SS-304L material	41.0 Nos.
151	90° elbow DN 350 Sch 40 is of butt welded type of SS-304L material	10.0 Nos.
152	90° elbow DN 300 Sch 40 is of butt welded type of SS-304L material	32.0 Nos.
153	90° elbow DN 250 Sch 40 is of butt welded type of SS-304L material	7.0 Nos.
154	90° elbow DN 200 Sch 40 is of butt welded type of SS-304L material	36.0 Nos.
155	90° elbow DN 150 Sch 40 is of butt welded type of SS-304L material	22.0 Nos.
156	90° elbow DN 100 Sch 40 is of butt welded type of SS-304L material	112.0 Nos.
157	90° elbow DN 80 Sch 40 is of butt welded type of SS-304L material	33.0 Nos.
158	90° elbow DN 50 Sch 40 is of butt welded type of SS-304L material	20.0 Nos.
159	90° elbow DN 25 Sch 40 is of butt welded type of SS-304L material	18.0 Nos.
160	90° elbow DN 15 Sch 40 is of butt welded type of SS-304L material	13.0 Nos.
161	Equal Tee DN 400 Sch 40 is of butt welded type of SS-304L material	5.0 Nos.
162	Equal Tee DN 200 Sch 40 is of butt welded type of SS-304L material	7.0 Nos.
163	Equal Tee DN 100 Sch 40 is of butt welded type of SS-304L material	24.0 Nos.
164	Equal Tee DN 80 Sch 40 is of butt welded type of SS-304L material	10.0 Nos.
165	Reducing Tee DN 400 x 350 Sch 40 is of butt welded type of SS-304L material	6.0 Nos.
166	Reducing Tee DN 400 x 300 Sch 40 is of butt welded type of SS-304L material	8.0 Nos.
167	Reducing Tee DN 400 x 200 Sch 40 is of butt welded type of SS-304L material	8.0 Nos.
168	Reducing Tee DN 150 x 100 Sch 40 is of butt welded type of SS-304L material	5.0 Nos.
169	Reducing Tee DN 100 x 80 Sch 40 is of butt welded type of SS-	12.0 Nos.

Sr. No.	Item Description	Quantity
	304L material	
170	Reducing Tee DN 100 x 50 Sch 40 is of butt welded type of SS-304L material	10.0 Nos.
171	Expander DN 400 x 600 Sch 40 is of butt welded type of SS-304L material	6.0 Nos.
172	Expander DN 300 x 400 Sch 40 is of butt welded type of SS-304L material	2.0 Nos.
173	Expander DN 300 x 350 Sch 40 is of butt welded type of SS-304L material	9.0 Nos.
174	Expander DN 150 x 200 Sch 40 is of butt welded type of SS-304L material	2.0 Nos.
175	Expander DN 80 x 100 Sch 40 is of butt welded type of SS-304L material	8.0 Nos.
176	Flange DN 400 is of WNRF Class 150 type of SS-304L material	21.0 Nos.
177	Flange DN 350 is of WNRF Class 150 type of SS-304L material	17.0 Nos.
178	Flange DN 300 is of WNRF Class 150 type of SS-304L material	41.0 Nos.
179	Flange DN 250 is of WNRF Class 150 type of SS-304L material	5.0 Nos.
180	Flange DN 200 is of WNRF Class 150 type of SS-304L material	54.0 Nos.
181	Flange DN 150 is of WNRF Class 150 type of SS-304L material	12.0 Nos.
182	Flange DN 100 is of WNRF Class 150 type of SS-304L material	113.0 Nos.
183	Flange DN 80 is of WNRF Class 150 type of SS-304L material	68.0 Nos.
184	Flange DN 50 is of WNRF Class 150 type of SS-304L material	24.0 Nos.
185	Flange DN 25 is of WNRF Class 150 type of SS-304L material	23.0 Nos.
186	Blank Flange DN 400 is of WNRF Class 150 type of SS-304L material	4.0 Nos.
187	Blank Flange DN 350 is of WNRF Class 150 type of SS-304L material	4.0 Nos.
188	Blank Flange DN 300 is of WNRF Class 150 type of SS-304L material	4.0 Nos.
189	Blank Flange DN 250 is of WNRF Class 150 type of SS-304L material	4.0 Nos.
190	Blank Flange DN 200 is of WNRF Class 150 type of SS-304L material	4.0 Nos.
191	Orifice Flange DN 400 is of WNRF Class 300 type of SS-304L material	4.0 Nos.
192	Orifice Flange DN 200 is of WNRF Class 300 type of SS-304L material	4.0 Nos.
193	Orifice Flange DN 150 is of WNRF Class 300 type of SS-304L material	4.0 Nos.

Sr. No.	Item Description	Quantity
194	Orifice Flange DN 100 is of WNRF Class 300 type of SS-304L material	12.0 Nos.
195	Orifice Flange DN 50 is of WNRF Class 300 type of SS-304L material	4.0 Nos.
196	Orifice Flange DN 25 is of WNRF Class 300 type of SS-304L material	8.0 Nos.
197	Weldolet DN 400 x 80 Sch 40 is of Class 3000 type of SS-304L material	4.0 Nos.
198	Weldolet DN 400 x 15 Sch 40 is of Class 3000 type of SS-304L material	8.0 Nos.
199	Weldolet DN 350 x 15 Sch 40 is of Class 3000 type of SS-304L material	8.0 Nos.
200	Weldolet DN 300 x 15 Sch 40 is of Class 3000 type of SS-304L material	8.0 Nos.
201	Weldolet DN 250 x 15 Sch 40 is of Class 3000 type of SS-304L material	8.0 Nos.
202	Weldolet DN 200 x 15 Sch 40 is of Class 3000 type of SS-304L material	8.0 Nos.
203	Weldolet DN 150 x 15 Sch 40 is of Class 3000 type of SS-304L material	8.0 Nos.
204	Weldolet DN 100 x 15 Sch 40 is of Class 3000 type of SS-304L material	8.0 Nos.
205	Weldolet DN 80 x 15 Sch 40 is of Class 3000 type of SS-304L material	8.0 Nos.
206	Elbowlet DN 400x15 Sch 40 is of Class 3000 type of SS-304L material	6.0 Nos.
207	Elbowlet DN 350x15 Sch 40 is of Class 3000 type of SS-304L material	12.0 Nos.
208	Elbowlet DN 100x15 Sch 40 is of Class 3000 type of SS-304L material	6.0 Nos.
209	Plug, DN15 type of SS-304L material	65.0 Nos.
210	Pipe Nipples, DN 15 x 100 mm Long type of SS-304L material	65.0 Nos.
	M3-S2: BOQ for Heavy Reflector Water System	
1	HW main coolant pump: Centrifugal, vertical, canned rotor, Flow:4000lpm, Head: 45 m of heavy water, Casing: ASTM A-351 GradeCF8M, Impeller: ASTM A-351 Gr. CF8M, Shaft: ASTM A-479 Gr. SS 410	2.0 Nos.
2	HW Shutdown coolant pump: Centrifugal, horizontal, canned rotor, Flow:1000lpm, Head:20 m of heavy water, Casing: ASTM A-351 GradeCF8M, Impeller: ASTM A-351 Gr. CF8M, Shaft: ASTM A-479	2.0 Nos.

Sr. No.	Item Description	Quantity
	Gr. SS 410	
3	HW make-up pump: Centrifugal, horizontal, Flow:50lpm, Head: 25 m, Casing: ASTM A-351 GradeCF8M, Impeller: ASTM A-351 Gr. CF8M, Shaft: ASTM A-479 Gr. SS 410	2.0 Nos.
4	HW drain tank pump: Centrifugal, horizontal, Flow:50lpm, Head: 25 m, Casing: ASTM A-351 Grade CF8M, Impeller: ASTM A-351 Gr. CF8M, Shaft: ASTM A-479 Gr. SS 410	2.0 Nos.
5	HW/DHR heat exchanger: Vertical shell & tube type, Heat load: 2700 kW, LMTD: 7.73 ^{o}C, Shell diameter 1.2 m, Overall length 3.51 m, No. of tubes: 8000, SS304L	2.0 Nos.
6	HW expansion tank: Vertical cylindrical with tori spherical heads, Diameter: 0.8 m, Overall height: 2 m, Minimum shell thickness: 6 mm, SS-304L	1.0 Nos.
7	HW delay tank: Horizontal cylindrical with torispherical heads, Shell diameter: 1.5 m, Overall length: 4.1 m, Minimum shell thickness: 10 mm, No. of 16 mm thick perforated plates with 15 mm holes at 25mm pitch inside the tank: 3, SS-304L	1.0 Nos.
8	HW dump tank: Horizontal cylindrical with torispherical heads, Shell diameter: 1.8 m, Overall length: 5 m, Minimum shell thickness: 6 mm, SS-304L	1.0 Nos.
9	HW storage tank: Horizontal cylindrical with torispherical heads, Shell diameter: 1.8 m, Overall length: 5 m, Minimum shell thickness: 6 mm, SS-304L	1.0 Nos.
10	HW drain tank: Horizontal cylindrical with torispherical heads, Shell diameter: 1 m, Overall length: 2.7 m, Minimum shell thickness:6 mm, SS-304L	1.0 Nos.
11	Basket strainer: Vertical mesh basket type, Shell diameter: 0.35 m, Overall height: 0.6 m, Minimum shell thickness: 6 mm, SS-304L	1.0 Nos.
12	Basket strainer: Vertical mesh basket type, Shell diameter: 0.15 m, Overall height: 0.3 m, Minimum shell thickness: 6 mm, SS-304L	2.0 Nos.
13	Y strainer, 150 NB Sch. 40, SS 304L	1.0 Nos.
14	Y strainer: 40 NB Sch. 40, SS 304L	1.0 Nos.
15	HW purification filter: Vertical cylindrical, Shell diameter: 0.45 m, Overall height:0.9 m, SS-304L	2.0 Nos.
16	HW purification mixed bed ion-exchanger: Vertical cylindrical, Shell diameter: 0.45 m, Overall height:0.9 m, SS-304L	2.0 Nos.
17	Seamless pipe having size DN200 Sch. 40 of SS 304L material	80.0 m
18	Seamless pipe having size DN150 Sch. 40 of SS 304L material	90.0 m
19	Seamless pipe having size DN80 Sch. 40 of SS 304L material	50.0 m
20	Seamless pipe having size DN40 Sch. 40 of SS 304L material	80.0 m

Sr. No.	Item Description	Quantity
21	Seamless pipe having size DN25 Sch. 40 of SS 304L material	250.0 m
22	Seamless pipe having size DN15 Sch. 40 of SS 304L material	100.0 m
23	Pipe having Size OD 168.3mm ID 146.36 mm Material: Al-5052-O	30.0 m
24	Pipe having Size OD 220 mm ID 200 mm Material: Al-5052-O	15.0 m
25	Pipe having Size OD 88.9mm ID 73.66 mm Material: Al-5052-O	15.0 m
26	Equal tee having size 200 x 200 Sch. 40 of SS 304L material	5.0 Nos.
27	Equal tee having size 150 x 150 Sch. 40 of SS 304L material	3.0 Nos.
28	Equal tee having size 80 x 80 Sch. 40 of SS 304L material	2.0 Nos.
29	Equal tee having size 40 x 40 Sch. 40 of SS 304L material	8.0 Nos.
30	Equal tee having size 25 x 25 Sch. 40 of SS 304L material	30.0 Nos.
31	Equal tee having size 15 x 15 Sch. 40 of SS 304L material	50.0 Nos.
32	Unequal tee having size 200 x 150 Sch. 40 of SS 304L material	4.0 Nos.
33	Unequal tee having size 150 x 80 Sch. 40 of SS 304L material	1.0 Nos.
34	Unequal tee having size 80 x 40 Sch. 40 of SS 304L material	1.0 Nos.
35	Unequal tee having size 40 x 25 Sch. 40 of SS 304L material	4.0 Nos.
36	Unequal tee having size 40 x 15 Sch. 40 of SS 304L material	12.0 Nos.
37	Unequal tee having size 15 x 25 Sch. 40 of SS 304L material	50.0 Nos.
38	90° elbow having size DN200 Sch. 40 of SS 304L material	17.0 Nos.
39	45° elbow having size DN200 Sch. 40 of SS 304L material	3.0 Nos.
40	90° elbow having size DN150 Sch. 40 of SS 304L material	13.0 Nos.
41	45° elbow having size DN150 Sch. 40 of SS 304L material	2.0 Nos.
42	90° elbow having size DN80 Sch. 40 of SS 304L material	10.0 Nos.
43	90° elbow having size DN40 Sch. 40 of SS 304L material	28.0 Nos.
44	90° elbow having size DN25 Sch. 40 of SS 304L material	70.0 Nos.
45	90° elbow having size DN15 Sch. 40 of SS 304L material	70.0 Nos.
46	Reducer having size 200 x 150 Sch. 40 of SS 304L material	4.0 Nos.
47	Reducer having size 200 x 80 Sch. 40 of SS 304L material	1.0 Nos.
48	Threadolet having size 150 x 40 Sch. 40 of SS 304L material	1.0 Nos.
49	Threadolet having size 150 x 25 Sch. 40 of SS 304L material	50.0 Nos.
50	Threadolet having size 150 x 15 Sch. 40 of SS 304L material	25.0 Nos.
51	Threadolet having size 200 x 25 Sch. 40 of SS 304L material	10.0 Nos.
52	Threadolet having size 200 x 15 Sch. 40 of SS 304L material	10.0 Nos.
53	Threadolet having size 80 x 25 Sch. 40 of SS 304L material	10.0 Nos.
54	Threadolet having size 80 x 15 Sch. 40 of SS 304L material	5.0 Nos.
55	Elbolet having size 200 x 15 Sch. 40 of SS 304L material	5.0 Nos.
56	Elbolet having size 150 x 15 Sch. 40 of SS 304L material	5.0 Nos.

Sr. No.	Item Description	Quantity
57	Elbolet having size 80 x 15 Sch. 40 of SS 304L material	5.0 Nos.
58	Elbolet having size 40 x 15 Sch. 40 of SS 304L material	5.0 Nos.
59	Weld neck flange having size DN200 Class 150 of SS 304L material	12.0 Nos.
60	Weld neck flange having size DN150 Class 150 of SS 304L material	34.0 Nos.
61	Weld neck flange having size DN80 Class 150 of SS 304L material	18.0 Nos.
62	Weld neck flange of thickness 50 mm for Pipe having Size OD 168.3mm ID 146.36 mm Material: Al-5052-O	6.0 Nos
63	Weld neck flange of thickness 50 mm for Pipe having Size OD 220 mm ID 200 mm Material: Al-5052-O	3.0 Nos
64	Weld neck flange of thickness 50 mm for Pipe having Size OD 88.9mm ID 73.66 mm Material: Al-5052-O	3.0 Nos
65	Socket welded flange having size DN40 Class 150 of SS 304L material	8.0 Nos.
66	Socket welded flange having size DN25 Class 150 of SS 304L material	24.0 Nos.
67	Plug having size DN15 of SS 304L material	50.0 Nos.
68	Flanged bellow sealed globe valve having size DN200 Sch. 40 of SS 304L material	3.0 Nos.
69	Flanged bellow sealed globe valve having size DN150 Sch. 40 of SS 304L material	7.0 Nos.
70	Flanged bellow sealed globe valve having size DN80 Sch. 40 of SS 304L material	5.0 Nos.
71	Flanged bellow sealed globe valve having size DN40 Sch. 40 of SS 304L material	1.0 Nos.
72	Flanged bellow sealed globe valve having size DN25 Sch. 40 of SS 304L material	4.0 Nos.
73	Flanged check valve having size DN150 Sch. 40 of SS 304L material	2.0 Nos.
74	Flanged check valve having size DN80 Sch. 40 of SS 304L material	2.0 Nos.
75	Flanged check valve having size DN25 Sch. 40 of SS 304L material	4.0 Nos.
76	Socket welded diaphragm valve having size DN40 Sch. 40 of SS 304L material	13.0 Nos.
77	Socket welded diaphragm valve having size DN25 Sch. 40 of SS 304L material	35.0 Nos.
78	Socket welded diaphragm valve having size DN15 Sch. 40 of SS 304L material	35.0 Nos.
79	Flanged bellow sealed quick opening globe type control valve having size DN150 Sch. 40 of SS 304L material	4.0 Nos.
	M3-S3: BOQ for Helium Cover Gas System	

Sr. No.	Item Description	Quantity
1	Pre-coolers with Double pipe, counter current, finned heat exchanger	2.0 Nos.
2	Recombination Units with Packed Bed type reactor	2.0 Nos.
3	Flame Arrestors with Stainless steel mesh type element	4.0 Nos.
4	After-coolers with Double pipe, counter current, finned heat exchanger	2.0 Nos.
5	Gas Holder with Constant Pressure variable volume Tank	1.0 Nos.
6	Blowers with Lobe type Blower	3.0 Nos.
7	Helium Tank with Vertical tank	1.0 Nos.
8	Drying circuit coolers with Double pipe, counter current, finned heat exchanger	1.0 Nos.
9	Freezer Driers with Shell and Coil type	2.0 Nos.
10	Sorber Beds with Activated coconut charcoal type absorber	2.0 Nos.
11	Heaters with Tape Heaters	3.0 Nos.
12	Common inlet line of Precoolers-1 & 2 with RTD, thermowell & temperature transmitter	1.0 Nos.
13	Outlet line of Precoolers-1 & 2 with RTD, thermowell & temperature transmitter	1.0 Nos.
14	Recombination Unit common I/L Temperature with RTD, thermowell & temperature transmitter	2.0 Nos.
15	Recombination Unit-1 Temperature with RTD, thermowell & temperature transmitter	1.0 Nos.
16	Recombination Unit-2 Temperature with RTD, thermowell & temperature transmitter	1.0 Nos.
17	Common inlet line of Aftercooler-1 & 2 with RTD with thermowell & temperature transmitter	1.0 Nos.
18	Outlet line of Aftercooler-1 & 2 with RTD with thermowell & temperature transmitter	2.0 Nos.
19	Equipment Drying Circuit Heater O/L Temperature with RTD with thermowell & temp. transmitter	1.0 Nos.
20	Drying circuit HX I/L Temperature with RTD with thermowell & temperature transmitter	1.0 Nos.
21	Drying circuit HX O/L Temperature with RTD with thermowell & temperature transmitter	1.0 Nos.
22	Freezer dryer O/L Temperature with RTD with thermowell & temperature transmitter	1.0 Nos.
23	Sorber bed O/L Temperature with RTD with thermowell & temperature transmitter	1.0 Nos.
24	LPGH Level with Level gauge with level transmitter	1.0 Nos.

Sr. No.	Item Description	Quantity
25	Helium Main Recirculation flow with Venturimeter along with differential pressure flow transmitter	1.0 Nos.
26	Helium Flow to drying circuit with Venturimeter along with differential pressure flow transmitter	1.0 Nos.
27	Helium addition flow with Rotameter	1.0 Nos.
28	Oxygen addition flow with Rotameter	1.0 Nos.
29	Helium Blowers common suction pressure with Pressure gauge with Differential Pressure transmitter	1.0 Nos.
30	Helium Blower-1 discharge pressure with Pressure gauge with Differential Pressure transmitter	1.0 Nos.
31	Helium Blower-2 discharge pressure with Pressure gauge with Differential Pressure transmitter	1.0 Nos.
32	Helium Blower-3 discharge pressure with Pressure gauge with Differential Pressure transmitter	1.0 Nos.
33	Helium System pressure with Pressure gauge with Differential Pressure transmitter	1.0 Nos.
34	Helium HP Tank pressure with Pressure gauge with Differential Pressure transmitter	1.0 Nos.
35	Failure of Rupture Disc-1 with Pressure gauge with Differential Pressure transmitter	1.0 Nos.
36	Failure of Rupture Disc-2 with Pressure gauge with Differential Pressure transmitter	1.0 Nos.
37	Failure of HP Tank Rupture Disc-1 with Pressure gauge with Differential Pressure transmitter	1.0 Nos.
38	Failure of HP Tank Rupture Disc-2 with Pressure gauge with Differential Pressure transmitter	1.0 Nos.
39	Pressure in Oxygen Addition Line with Pressure gauge	1.0 Nos.
40	Pressure in Helium Addition Line with Pressure gauge	1.0 Nos.
41	Sorber O/L Pressure with Pressure gauge	1.0 Nos.
42	Pneumatic and flanged Pneumatic control valve of size 40 NB and a Control valve	1.0 Nos.
43	Manual and welded Pre-cooler inlet valve of size 40 NB and Bellow sealed Globe valve	2.0 Nos.
44	Manual and welded Pre-cooler outlet valve of size 40 NB and Bellow sealed Globe valve	2.0 Nos.
45	Manual and welded RCU inlet valve of size 40 NB and Bellow sealed Globe valve	2.0 Nos.
46	Manual and welded RCU outlet valve of size 40 NB and Bellow sealed Globe valve	2.0 Nos.

Sr. No.	Item Description	Quantity
47	Manual and welded After cooler inlet valve of size 40 NB and Bellow sealed Globe valve	2.0 Nos.
48	Manual and welded After cooler outlet valve of size 40 NB and Bellow sealed Globe valve	2.0 Nos.
49	Manual and welded Gas analyser inlet valve of size 40 NB and Bellow sealed Globe valve	1.0 Nos.
50	Manual and welded Gas analyser outlet valve of size 40 NB and Bellow sealed Globe valve	1.0 Nos.
51	Manual and welded Throttle valve before Gas holder of size 40 NB and Bellow sealed Globe valve	1.0 Nos.
52	Manual and welded LPGH Inlet valve of size 40 NB and Bellow sealed Globe valve	1.0 Nos.
53	Manual and welded LPGH outlet valve of size 40 NB and Bellow sealed Globe valve	1.0 Nos.
54	Manual and welded Blower suction valve of size 40 NB and Bellow sealed Globe valve	3.0 Nos.
55	Auto and welded Blower Discharge valve of size 40 NB and Bellow sealed Globe valve	3.0 Nos.
56	Manual and welded Throttle valve at discharge of blower of size DN40 and Bellow sealed Globe valve	1.0 Nos.
57	Manual and welded Isolation valve for pressure relief on gas balance lines of size 40 NB and Bellow sealed Globe valve	2.0 Nos.
58	Manual and welded Isolation valve for pressure relief on Helium Tank of size 40 NB and Bellow sealed Globe valve	1.0 Nos.
59	Manual and welded Helium tank discharge valve of size 40 NB and Bellow sealed Globe valve	2.0 Nos.
60	Auto and welded Helium tank pressure control valve of size 40 NB and a Control Valve	24.0 Nos.
61	Manual and welded Helium tank pressure control valve inlet/outlet valve of size 40 NB and Bellow sealed Globe valve	2.0 Nos.
62	Auto and welded Rupture disk on gas balance line of size 25 NB and a Rupture Disk	2.0 Nos.
63	Auto and welded Rupture Disk on helium tank of size 40 NB and a Rupture Disk	2.0 Nos.
64	Pneumatic and flanged Pressure relief valve on gas balance line of size 25 NB and a Relief valve	2.0 Nos.
65	Pneumatic and flanged Pressure relief valve on Helium Tank of size 40 NB and a Relief valve	1.0 Nos.
66	Manual and welded Heater Inlet valve of size 25 NB and Bellow sealed Globe valve	1.0 Nos.

Sr. No.	Item Description	Quantity
67	Manual and welded Heater outlet valve of size 25 NB and Bellow sealed Globe valve	2.0 Nos.
68	Manual and welded Heavy water HX drying inlet valve of size 25NB and Bellow sealed Globe valve	2.0 Nos.
69	Manual and welded Heavy water HX drying outlet valve of size 25NB and Bellow sealed Globe valve	2.0 Nos.
70	Manual and welded HW IX Drying inlet valve of size 25 NB and Bellow sealed Globe valve	2.0 Nos.
71	Manual and welded HW IX Drying outlet valve of size 25 NB and Bellow sealed Globe valve	2.0 Nos.
72	Manual and welded HW Filter Drying inlet valve of size 25 NB and Bellow sealed Globe valve	2.0 Nos.
73	Manual and welded HW Filter Drying outlet valve of size 25 NB and Bellow sealed Globe valve	1.0 Nos.
74	Manual and welded Drying circuit r bypass Valve of size 25 NB and Bellow sealed Globe valve	1.0 Nos.
75	Manual and welded Drying circuit cooler inlet Valve of size 25 NB and Bellow sealed Globe valve	1.0 Nos.
76	Manual and welded Drying circuit cooler outlet Valve of size 25 NB and Bellow sealed Globe valve	1.0 Nos.
77	Manual and welded Drying circuit cooler bypass Valve of size 25NB and Bellow sealed Globe valve	1.0 Nos.
78	Manual and welded Freezer Dryer inlet Valve of size 25 NB and Bellow sealed Globe valve	2.0 Nos.
79	Manual and welded Freezer Dryer outlet Valve of size 25 NB and Bellow sealed Globe valve	2.0 Nos.
80	Manual and welded Freezer Dryer bypass Valve of size 25 NB and Bellow sealed Globe valve	1.0 Nos.
81	Manual and welded Sorber Bed inlet Valve of size 25 NB and Bellow sealed Globe valve	1.0 Nos.
82	Manual and welded Sorber bed outlet Valve of size 25 NB and Bellow sealed Globe valve	1.0 Nos.
83	Manual and welded Sorber bed bypass Valve of size 25 NB and Bellow sealed Globe valve	1.0 Nos.
84	Manual and welded Cold trap and vacuum pump isolation valve of size 25 NB and Bellow sealed Globe valve	1.0 Nos.
85	Manual and welded Cold trap inlet valve of size 25 NB and Bellow sealed Globe valve	1.0 Nos.
86	Manual and welded Cold trap outlet valve of size 25 NB and Bellow sealed Globe valve	1.0 Nos.

Sr. No.	Item Description	Quantity
87	Manual and welded Vacuum pump inlet valve of size 25 NB and Bellow sealed Globe valve	1.0 Nos.
88	Manual and welded Vacuum pump outlet valve of size 25 NB and Bellow sealed Globe valve	1.0 Nos.
89	Manual and welded Helium drain tank isolation valve of size 15 NB and Bellow sealed Globe valve	1.0 Nos.
90	Manual and welded HW drain tank isolation valve of size 15 NB and Bellow sealed Globe valve	1.0 Nos.
91	Manual and welded Storage tank isolation valve of size 15 NB and Bellow sealed Globe valve	1.0 Nos.
92	Manual and welded FDDT tank isolation valve of size 15 NB and Bellow sealed Globe valve	1.0 Nos.
93	Manual and welded Collection tank isolation valve of size 15 NB and Bellow sealed Globe valve	1.0 Nos.
94	Manual and welded Pre-cooler drain valve of size 15 NB and a Diaphragm valve	2.0 Nos.
95	Manual and welded After cooler drain valve of size 15 NB and a Diaphragm valve	2.0 Nos.
96	Manual and welded Drying circuit cooler drain valve of size 15 NB and a Diaphragm valve	1.0 Nos.
97	Manual and welded Freezer dryer drain valve of size 15 NB and a Diaphragm valve	2.0 Nos.
98	Manual and welded cold trap drain valve of size 15 NB and a Diaphragm valve	1.0 Nos.
99	Manual and welded helium tank drain valve of size 15 NB and a Diaphragm valve	1.0 Nos.
100	Manual and welded Helium drain tank drain valve of size 15 NB and a Diaphragm valve	1.0 Nos.
101	Manual and welded HW drain tank drain valve of size 15 NB and a Diaphragm valve	1.0 Nos.
102	Manual and welded Storage tank drain valve of size 15 NB and a Diaphragm valve	1.0 Nos.
103	Manual and welded FDDT tank drain valve of size 15 NB and a Diaphragm valve	1.0 Nos.
104	Manual and welded LPGH relief pot drain tank of size 25 NB and a Diaphragm valve	1.0 Nos.
105	Manual and welded LPGH oil trap drain tank of size 25 NB and a Diaphragm valve	2.0 Nos.
106	Manual and welded Cover Gas-filling system of size 15 NB and Globe valve	4.0 Nos.

Sr. No.	Item Description	Quantity
107	Manual and welded Cover Gas-filling system of size 15 NB and a Diaphragm valve	2.0 Nos.
108	Seamless Pipe, DN 100 Sch. 40 of material SS 304L	90.0 m
109	Seamless Pipe, DN 40 Sch. 40 of material SS 304L	200.0 m
110	Seamless Pipe, DN 25 Sch. 40 of material SS 304L	90.0 m
111	Seamless Pipe, DN 15 Sch. 40 of material SS 304L	90.0 m
112	Pipe having Size OD 114.3mm ID 97.18 mm Material: Al-5052-O	50.0 m
113	Butt welded 90^0 elbow, DN 100, Sch 40 of material SS 304L	27.0 Nos.
114	Butt welded 90^0 elbow, DN 40, Sch 40 of material SS 304L	39.0 Nos.
115	Butt welded 90^0 elbow, DN 25, Sch 40 of material SS 304L	50.0 Nos.
116	Butt welded 90^0 elbow, DN 15, Sch 40 of material SS 304L	40.0 Nos.
117	Butt welded 45^0 elbow, DN 100, Sch 40 of material SS 304L	1.0 Nos.
118	Butt-welded Tee 100x100, Sch 40 of material SS 304L	3.0 Nos.
119	Butt-welded Tee 40x40, Sch 40 of material SS 304L	15.0 Nos.
120	Butt-welded Tee 25x25, Sch 40 of material SS 304L	13.0 Nos.
121	Butt-welded Unequal Tee 40x25, Sch 40 of material SS 304L	3.0 Nos.
122	Butt-welded Unequal Tee 40x15, Sch 40 of material SS 304L	2.0 Nos.
123	Butt-welded Reducer 40x25, Sch40 of material SS 304L	2.0 Nos.
124	WNRF, Class 150 Flange DN 40 of material SS 304L	66.0 Nos.
125	WNRF, Class 150 Flange DN 25 of material SS 304L	94.0 Nos.
126	WNRF, Class 150 Flange DN 15 of material SS 304L	36.0 Nos.
127	Weld neck flange of thickness 50 mm for Pipe having Size OD 114.3mm ID 97.18 mm Material: Al-5052-O	6.0 Nos
	M3-S4: BOQ for Pool Cooling System (PCS)	
1	PCS main coolant pump: Centrifugal type, Orientation: horizontal, With flywheel, Flow: 2500lpm & Head: 50 mWC, Flywheel Mass Moment of Inertia > 5 kg-m2. (GD2 > 20 kg-m2), Fluid handled: DM water, Casing: ASTM A-351 GradeCF8M, Impeller: ASTM A-351 Gr. CF8M, Shaft: ASTM A-479 Gr. SS 410, Flywheel: ASTM A 508 Gr. 4N Class 1, Designed & Qualified as per ASME Section III, Div.1, Sub-section NC	3.0 Nos.
2	PCS shutdown coolant pump: Centrifugal type, Orientation: horizontal, Flow: 1200LPM & Head: 25mWC, Fluid handled: DM water, Casing: ASTM A-351 GradeCF8M, Impeller: ASTM A-351 Gr. CF8M, Shaft: ASTM A-479 Gr. SS 410, Designed & Qualified as per ASME Section III, Div.1, Sub-section NC	2.0 Nos.
3	PCS/DHRS heat exchanger: Plate type Heat Exchanger, Primary Flow: 4700lpm, Secondary Flow: 6000lpm, Heat Load: 1.5 MW, Primary Fluid: DM Water, Secondary Fluid: Cooling Tower Water,	2.0 Nos.

Sr. No.	Item Description	Quantity
	Plates: SS 304, Gasket: Nitrile Rubber, Designed & Qualified as per ASME Section III, Div.1, Sub-section NC	
4	PCS delay tank: Vertical cylindrical, Volume: 6500 litre, No. of perforated plates: 3, 15mm circular perforations arranged in a triangular pitch of 25mm, Internal Diameter of Tank: 1.5 m, Height of Tank: 4.4 m, Fluid handled: DM water, SS 304L, Designed & Qualified as per ASME Section III, Div.1, Sub-section NC	1.0 Nos.
5	PCS main pump suction strainer: Vertical mesh basket type, Flow: 2500lpm, Fluid handled: DM water, SS 304L	3.0 Nos.
6	PCS Shutdown pump suction strainer: Vertical mesh basket type, Flow: 1200lpm, Fluid handled: DM water, SS 304L, Designed & Qualified as per ASME Section III, Div.1, Sub-section NC	2.0 Nos.
7	PCS Reactor Pool Line Discharge Strainer: Vertical mesh basket type, Flow: 3900lpm, Fluid handled: DM water, SS 304L, Designed & Qualified as per ASME Section III, Div.1, Sub-section NC	1.0 Nos.
8	PCS Service Pool Discharge line strainer: Vertical mesh basket type, Flow: 800lpm, Fluid handled: DM water, SS 304L, Designed & Qualified as per ASME Section III, Div.1, Sub-section NC	1.0 Nos.
9	PCS Y-strainer: Y-strainer, Flow: 300lpm, Fluid handled: DM water, SS 304L, Designed & Qualified as per ASME Section III, Div.1, Sub-section ND	1.0 Nos.
10	PCS purification filter: Vertical Cylindrical Cartridge type, Flow: 300lpm, Filter Media: Polypropylene Candle, Flow: 300lpm, SS 304L, Designed & Qualified as per ASME Section III, Div.1, Sub-section ND	2.0 Nos.
11	PCS purification mixed bed ion-exchanger: Vertical Mixed Bed Hopper Type Assembly, Flow: 300lpm, Fluid handled: DM water, SS 304L, Designed & Qualified as per ASME Section III, Div.1, Sub-section ND	2.0 Nos.
12	Seamless pipe having size DN 250 Sch. 40 of SS-304L material	20.0 m
13	Seamless pipe having size DN 200 Sch. 40 of SS-304L material	84.0 m
14	Seamless pipe having size DN 150 Sch. 40 of SS-304L material	50.0 m
15	Seamless pipe having size DN 125 Sch. 40 of SS-304L material	10.0 m
16	Seamless pipe having size DN 100 Sch. 40 of SS-304L material	82.0 m
17	Seamless pipe having size DN 80 Sch. 40 of SS-304L material	86.0 m
18	Seamless pipe having size DN 50 Sch. 40 of SS-304L material	258.0 m
19	Seamless pipe having size DN 15 Sch. 40 of SS-304L material	30.0 m
20	90° elbow LR having size DN 200 Sch 40 of SS-304L material	30.0 Nos.
21	90° elbow LR having size DN 150 Sch 40 of SS-304L material	14.0 Nos.
22	90° LR elbow LR having size DN 125 Sch 40 of SS-304L material	5.0 Nos.

Sr. No.	Item Description	Quantity
23	90° elbow LR having size DN 100 Sch 40 of SS-304L material	27.0 Nos.
24	90° elbow LR having size DN 80 Sch 40 of SS-304L material	28.0 Nos.
25	90° elbow LR having size DN 50 Sch 40 of SS-304L material	65.0 Nos.
26	90° elbow LR having size DN 15 Sch 40 of SS-304L material	5.0 Nos.
27	90° reducing elbow LR having size DN 200x150 Sch 40 of SS-304L material	5.0 Nos.
28	45° elbow LR having size DN 200 Sch 40 of SS-304L material	5.0 Nos.
29	45° elbow LR having size DN 150 Sch 40 of SS-304L material	5.0 Nos.
30	45° elbow LR having size DN 50 Sch 40 of SS-304L material	5.0 Nos.
31	Equal tee having size 200x200 Sch 40 of SS-304L material	5.0 Nos.
32	Equal tee having size 150x150 Sch 40 of SS-304L material	5.0 Nos.
33	Equal tee having size 100x100 Sch 40 of SS-304L material	5.0 Nos.
34	Equal tee having size 80x80 Sch 40 of SS-304L material	5.0 Nos.
35	Equal tee having size 50x50 Sch 40 of SS-304L material	6.0 Nos.
36	Equal tee having size 15x15 Sch 40 of SS-304L material	5.0 Nos.
37	Unequal tee having size 250x200 Sch 40 of SS-304L material	5.0 Nos.
38	Unequal tee having size 250x100 Sch 40 of SS-304L material	5.0 Nos.
39	Unequal tee having size 200x150 Sch 40 of SS-304L material	6.0 Nos.
40	Unequal tee having size 200x100 Sch 40 of SS-304L material	5.0 Nos.
41	Unequal tee having size 200x80 Sch 40 of SS-304L material	5.0 Nos.
42	Unequal tee having size 100x80 Sch 40 of SS-304L material	5.0 Nos.
43	Reducer having size 200x150 Sch 40 of SS-304L material	8.0 Nos.
44	Reducer having size 200x100 Sch 40 of SS-304L material	5.0 Nos.
45	Weld neck flange having size DN 200 of SS-304L material	3.0 Nos.
46	Weld neck flange having size DN 150 Class 150 of SS-304L material	8.0 Nos.
47	Weld neck flange having size DN 125 Class 150 of SS-304L material	2.0 Nos.
48	Weld neck flange having size DN 100 Class 150 of SS-304L material	5.0 Nos.
49	Weld neck flange having size DN 80 Class 150 of SS-304L material	2.0 Nos.
50	Blind flange having size DN 125 Class 150 of SS-304L material	3.0 Nos.
51	Weld neck flange having size DN 50 Class 150 of SS-304L material	10.0 Nos.
52	Weldolet having size 200x50 Sch 40 of SS-304L material	2.0 Nos.
53	Weldolet having size 150x50 Sch 40 of SS-304L material	2.0 Nos.
54	Threadolet having size 200x15 Sch 40 of SS-304L material	8.0 Nos.
55	Threadolet having size 150x15 Sch 40 of SS-304L material	6.0 Nos.

Sr. No.	Item Description	Quantity
56	Threadolet having size 125x15 Sch 40 of SS-304L material	5.0 Nos.
57	Threadolet having size 100x15 Sch 40 of SS-304L material	9.0 Nos.
58	Threadolet having size 80x15 Sch 40 of SS-304L material	8.0 Nos.
59	Threadolet having size 50x15 Sch 40 of SS-304L material	10.0 Nos.
60	Elbolet having size 200 x 15 Sch 40 of SS-304L material	5.0 Nos.
61	Elbolet having size 150x15 Sch 40 of SS-304L material	5.0 Nos.
62	Elbolet having size 125 x 15 Sch 40 of SS-304L material	5.0 Nos.
63	Elbolet having size 100x15 Sch 40 of SS-304L material	5.0 Nos.
64	Elbolet having size 80 x 15 Sch 40 of SS-304L material	5.0 Nos.
65	Elbolet having size 50x15 Sch 40 of SS-304L material	5.0 Nos.
66	Plug having size DN15 of SS-304L material	50.0 Nos.
67	Flanged gate valve having size DN200 Sch. 40 of ASTM-A-351 Grade CF8M	10.0 Nos.
68	Flanged motorised gate valve having size DN200 Sch. 40 of ASTM-A-351 Grade CF8M material, actuator motor, limit switches, torque switch	3.0 Nos.
69	Flanged motorised gate valve having size DN150 Sch. 40 of ASTM-A-351 Grade CF8M material, actuator motor, limit switches, torque switch	3.0 Nos.
70	Flanged gate valve having size DN100 Sch. 40 of ASTM-A-351 Grade CF8M	4.0 Nos.
71	Flanged motorised gate valve having size DN100 Sch. 40 of ASTM-A-351 Grade CF8M material, actuator motor, limit switches, torque switch	4.0 Nos.
72	Flanged motorised gate valve having size DN80 Sch. 40 of ASTM-A-351 Grade CF8M material, actuator motor, limit switches, torque switch	4.0 Nos.
73	Gate valve having size DN50 Sch. 40 of ASTM-A-351 Grade CF8M material	14.0 Nos.
74	Flanged motorized gate valve having size DN50 Sch. 40 of ASTM-A-351 Grade CF8M material, actuator motor, limit switches, torque switch	4.0 Nos.
75	Flanged globe valve having size DN200 Sch. 40 of ASTM-A-351 Grade CF8M material	3.0 Nos.
76	Flanged globe valve having size DN150 Sch. 40 of ASTM-A-351 Grade CF8M material	7.0 Nos.
77	Flanged globe valve having size DN100 Sch. 40 of ASTM-A-351 Grade CF8M material	4.0 Nos.
78	Flanged globe valve having size DN80 Sch. 40 of ASTM-A-351	4.0 Nos.

Sr. No.	Item Description	Quantity
	Grade CF8M material	
79	Flanged globe valve having size DN50 Sch. 40 of ASTM-A-351 Grade CF8M material	3.0 Nos.
80	Flanged swing type check valve having size DN150 Sch. 40 of ASTM-A-351 Grade CF8M material, limit switches, dashpot	5.0 Nos.
81	Flanged swing type check valve having size DN100 Sch. 40 of ASTM-A-351 Grade CF8M material, limit switches, dashpot	4.0 Nos.
82	Flanged diaphragm valve having size DN50 Sch. 40 of ASTM-A-351 Grade CF8M Diaphragm EPDM material	15.0 Nos.
83	A one end socket welded other end NPT diaphragm valve having size DN15 Sch. 40 of ASTM-A-351 Grade CF8M Diaphragm EPDM material	200.0 Nos.
	M3-S5: BOQ for Hot Water Layer System	
1	HWL Pump-1 & 2 with Motor: Centrifugal pump, Flow: 300lpm, Head: 60 mWC, Motor: 5.5 kW, 1500 rpm, 10 bar (g), 60 0C, 304, 304L, Grade CF3, Grade CF8	2.0 Nos
2	Electrical Heater-1 & 2 with Terminal box & control panel: Heater vessel, heating element, terminal box & control panel, 150 kW, 10 bar (g), 80 C, 304, 304L	2.0 Nos
3	Filter-1 & 2: Cartridge filter, 10 bar (g), 60 0C, 5µ filter, SA312 TP 304L, SA 240 304L	2.0 Nos
4	Pump suction strainer-1 & 2: Basket strainer, 10 bar (g), 60 C, 200µ, SA312 TP 304L, SA 240 304L, SA 351CF8	2.0 Nos
5	Y-strainer: Y-strainer with washable mesh, 10 bar (g), 60 0C, 200µ, SA-351 CF8	1.0 Nos
6	Mixed bed ion exchanger-1,2 & 3: 150lpm rated flow, 10 bar (g), 60 0C, SA312 TP 304L, SA 240 304L	3.0 Nos
7	HWL Reactor pool inlet distribution header: A semi-circular header with multiple nozzles for flow distribution, SA312 TP 304L	1.0 Nos.
8	HWL Reactor pool outlet distribution header: A semi-circular header with multiple nozzles for flow distribution, SA312 TP 304L	1.0 Nos.
9	HWL Service pool inlet distribution header: A straight header with multiple nozzles for flow distribution, SA312 TP 304L	1.0 Nos.
10	HWL Service pool outlet distribution header: A straight header with multiple nozzles for flow distribution, SA312 TP 304L	1.0 Nos.
11	Gate valve: - size DN 50 flanged ends	5.0 Nos
12	Globe valve: - size DN 50 flanged ends	3.0 Nos
13	Check valve: - size DN 50 flanged ends	2.0 Nos
14	Gate valve: - size DN 65flanged ends	2.0 Nos

Sr. No.	Item Description	Quantity
15	Diaphragm valve: - size DN 50 flanged ends	22.0 Nos
16	Diaphragm valve: - size DN 15 One end socket welded one end threaded	57.0 Nos
17	Seamless pipe having size DN65 Sch 40S of SA312 TP 304L material with PE end type	24.0 m
18	Seamless pipe having size DN50 Sch 40S of SA312 TP 304L material with PE end type	300.0 m
19	Seamless pipe having size DN15 Sch 40S of SA312 TP 304L material with PE end type	30.0 m
20	LR 90o seamless elbow having size DN65 Sch 40S of SA 403 WP304L material with BW end type	10.0 Nos
21	LR 90o seamless elbow having size DN50 Sch 40S of SA 403 WP304L material with BW end type	70.0 Nos
22	SR 90o seamless elbow having size DN65 Sch 40S of SA 403 WP304L material with BW end type	–
23	SR 90o seamless elbow having size DN50 Sch 40S of SA 403 WP304L material with BW end type	10.0 Nos
24	LR 45o seamless elbow having size DN65 Sch 40S of SA 403 WP304L material with BW end type	
25	LR 45o seamless elbow having size DN50 Sch 40S of SA 403 WP304L material with BW end type	5.0 Nos
26	90o elbow having size DN15 3000# of SA 182 F 304L material with SW end type	15.0 Nos
27	45o elbow having size DN15 3000# of SA 182 F 304L material with SW end type	5.0 Nos
28	Equal seamless tee (equal) having size DN65 Sch 40S of SA 403 WP304L material with BW end type	4.0 Nos
29	Equal seamless tee (equal) having size DN50 Sch 40S of SA 403 WP304L material with BW end type	20.0 Nos
30	Equal tee (equal) having size DN15 3000# of SA 182 F 304L material with SW end type	5.0 Nos
31	WN RF serrated finish flange having size DN 65 150# of SA 182 F 304L material with FL end type	12.0 Nos
32	WN RF serrated finish flange having size DN 50 150# of SA 182 F 304L material with FL end type	90.0 Nos
33	Concentric seamless reducer having size 65X50 Sch 40S of SA 403 WP304L material with BW end type	4.0 Nos
34	Sockolet having size 65 x 15 3000# of SA 182 F 304L material with SW end type	5.0 Nos

Sr. No.	Item Description	Quantity
35	Sockolet having size 50 x 15 3000# of SA 182 F 304L material with SW end type	10.0 Nos
36	Threadolet having size 65 x 15 3000# of SA 182 F 304L material with threaded end type	10.0 Nos
37	Threadolet having size 50 x 15 3000# of SA 182 F 304L material with threaded end type	20.0 Nos
38	Threaded elbolet having size 65 x 15 3000# of SA 182 F 304L material with threaded end type	2.0 Nos
39	Threaded elbolet having size 50 x 15 3000# of SA 182 F 304L material with threaded end type	5.0 Nos
40	A hexagonal headed plug having size 65X50 any of SA 182 F 304L material with threaded end type	30.0 Nos
41	A 75mm long bolt having size M-16 of SA 193 B8A material	420.0 Nos
42	A hex nut Blackodised nut having size M-16 of SA 193 Gr 8A material	420.0 Nos
43	A 1.6mm durometer shore A60±5 gasket having size DN65 150# of EPDM material	12.0 Nos
44	Gasket having size DN 50 150# of EPDM material	90.0 Nos
45	Flexible Braided hose, SS 304L	8 Nos
46	Quick connection coupling of Victaulic type, SS304L	8 Nos
47	All piping supports piping supports of Carbon steel material	Lump sum
	M3-S6: BOQ for Secondary Cooling Water System (SCW)	
1	SCW pump: Centrifugal, Horizontal split casing, Flow: 21000 lpm, Head: 50 mWC, Fluid Handled: Cooling Tower Water, Casing: ASTM A-216 Gr. WCB, Cast Steel, Impeller: Stainless steel, Shaft: ASTM-A-322, 4140, Designed & Qualified as per ASME Section VIII, Div. 1	6.0 Nos.
2	SCW cooling tower: Induced draft, Counter-flow type, Heat load: 13.5 MW, Flow: 21000 lpm, Wet-bulb temperature: 30°C, Approach: 4°C, Basin: RCC structure (to be constructed by the bidder), performance tested as per ASME PTC:23 or CTI ATP-105.	6.0 Nos.
3	SCW pump suction strainers: Vertical, 20 mesh, basket type, SS-304L/ SA 53 Galvanised	6.0 Nos.
4	SCW pump discharge strainers: Vertical, 40 mesh, basket type, SS-304L/ SA 53 Galvanised	6.0 Nos.
5	*Pipe having size DN900 Sch 40 of SA53- Galvanised CS material.	432.0 m
6	Pipe having size DN500 Sch 40 of SA53- Galvanised CS material.	20.0 m
7	Pipe having size DN450 Sch 40 of SA53- Galvanised CS material.	216.0 m
8	Pipe having size DN400 Sch 40 of SA53- Galvanised CS material.	195.0 m

Sr. No.	Item Description	Quantity
9	Pipe having size DN350 Sch 40 of SA53- Galvanised CS material.	10.0 m
10	Seamless pipe having size DN50 Sch 40 of SA53- Galvanised CS material.	44.0 m
11	Seamless pipe having size DN15 Sch 40 of SA53- Galvanised CS material.	22.0 m
12	90° mitre bend having size DN900 Sch 40 of GCS material.	23.0 Nos.
13	90° mitre bend having size DN500 Sch 40 of GCS material.	12.0 Nos.
14	90° mitre bend having size DN450 Sch 40 of GCS material.	32.0 Nos.
15	90° mitre bend having size DN400 Sch 40 of GCS material.	51.0 Nos.
16	45° mitre bend having size DN400 Sch 40 of GCS material.	8.0 Nos.
17	Pipe to pipe tee joint with reinforcement pad having size 900x500 Sch 40 of GCS material.	5.0 Nos.
18	Pipe to pipe tee joint with reinforcement pad having size 900x450 Sch 40 of GCS material.	22.0 Nos.
19	Pipe to pipe tee joint with reinforcement pad having size 900x400 Sch 40 of GCS material.	8.0 Nos.
20	Pipe to pipe tee joint with reinforcement pad having size 500x400 Sch 40 of GCS material.	5.0 Nos.
21	Pipe to pipe tee joint with reinforcement pad having size 450x400 Sch 40 of GCS material.	5.0 Nos.
22	Concentric reducer having size 500x400 Sch 40 of GCS material.	5.0 Nos.
23	Concentric reducer having size 400x350 Sch 40 of GCS material.	10.0 Nos.
24	Slip-on flange having size DN900 Class 150 of GCS material.	8.0 Nos.
25	Slip-on flange having size DN500 Class 150 of GCS material.	5.0 Nos.
26	Slip-on flange having size DN450 Class 150 of GCS material.	15.0 Nos.
27	Slip-on flange having size DN400 Class 150 of GCS material.	15.0 Nos.
28	Slip-on flange having size DN350 Class 150 of GCS material.	2.0 Nos.
29	Slip-on flange having size DN50 Class 150 of GCS material.	4.0 Nos.
30	Blind flange having size DN900 of GCS material.	8.0 Nos.
31	Weldolet having size 900x50 Sch 40 of GCS material.	15.0 Nos.
32	Weldolet having size 350x50 Sch 40 of GCS material.	10.0 Nos.
33	Threadolet having size 900x15 Sch 40 of GCS material.	4.0 Nos.
34	Threadolet having size 450x15 Sch 40 of GCS material.	8.0 Nos.
35	Threadolet having size 400x15 Sch 40 of GCS material.	25.0 Nos.
36	Threadolet having size 350x15 Sch 40 of GCS material.	10.0 Nos.
37	Elbolet having size 450x15 Sch 40 of GCS material.	15.0 Nos.
38	Elbolet having size 400x15 Sch 40 of GCS material.	15.0 Nos.
39	Flanged butterfly valve, manual with gearbox, hand-wheel with chain	24.0 Nos.

Sr. No.	Item Description	Quantity
	and having size DN450 of GCS material.	
40	Flanged butterfly valve motorised with gearbox & having manual handwheel, having size DN400 of GCS material, with actuator motor, limit switches, torque switch	10.0 Nos.
41	Flanged butterfly valve, manual with gearbox, hand-wheel with chain and having size DN400 of GCS material.	8.0 Nos.
42	Flanged check valve swing type having size DN400 of GCS material, with dashpot, limit switches	8.0 Nos.
43	Flanged gate valve having size DN50 of GCS material.	78.0 Nos.
44	A one end socket welded other end NPT diaphragm valve having size DN15 of GCS material.	42.0 Nos.
	**Note: ***Seamless pipe is preferred. But for pipe sizes greater than DN300, welded pipe is also acceptable. However, for sizes less than DN300, only seamless pipe is acceptable.	
	M3-S7: BOQ for Decay Heat Removal System	
1	DHRS Pump: Centrifugal with mechanical seal, Horizontal Mounted, Flow:6250LPM, Head: 45m WC, Casing: ASTM A-216 Gr. WCB (Galvanised), Cast Steel, Impeller: Stainless steel, Shaft: ASTM-A-322, 4140	3.0 Nos.
2	DHRS auxiliary pumps: Centrifugal with mechanical seal, Horizontal Mounted, Flow:3150LPM, Head: 15m WC, Casing: ASTM A-216 Gr. WCB (Galvanised), Cast Steel, Impeller: Stainless steel, Shaft: ASTM-A-322, 4140	2.0 Nos.
3	Strainer: Basket Type, Vertical, Flanged Top Cover, Allowable Pressure Drop at 50% blockage: 1.5mWC, SS-304L/ SA 53 Galvanised	3.0 Nos.
4	Cooling Tower (CT): Counter-Current, Induced Draft type, 3 Cells, Cell Rating: 2.5MW (Total 7.5 MW), Flow per CT cell: 6250 lpm, Outlet temperature: 34°C, Basin: FRP/Concrete, Fill: PVC Honeycomb	3.0 Nos.
5	Seamless pipe having size DN15 Sch. 40 of GI SA53 - CS material	60.0 m
6	Seamless pipe having size DN25 Sch. 40 of GI SA53 - CS material	60.0 m
7	Seamless pipe having size DN40 Sch. 40 of GI SA53 - CS material	50.0 m
8	Seamless pipe having size DN100 Sch. 40 of GI SA53 - CS material	70.0 m
9	Seamless pipe having size DN150 Sch. 40 of GI SA53 - CS material	30.0 m
10	Seamless pipe having size DN200 Sch. 40 of GI SA53 - CS material	50.0 m
11	Seamless pipe having size DN250 Sch. 40 of GI SA53 - CS material	90.0 m
12	Seamless pipe having size DN300 Sch. 40 of GI SA53 - CS material	50.0 m
13	Seamless pipe having size DN350 Sch. 40 of GI SA53 - CS material	150.0 m

Sr. No.	Item Description	Quantity
14	Slip-on flange having size DN25 Class 150 of GCS material	12.0 Nos.
15	Slip-on flange having size DN40 Class 150 of GCS material	12.0 Nos.
16	Slip-on flange having size DN100 Class 150 of GCS material	14.0 Nos.
17	Slip-on flange having size DN150 Class 150 of GCS material	18.0 Nos.
18	Slip-on flange having size DN200 Class 150 of GCS material	32.0 Nos.
19	Slip-on flange having size DN250 Class 150 of GCS material	62.0 Nos.
20	Slip-on flange having size DN300 Class 150 of GCS material	20.0 Nos.
21	Slip-on flange having size DN350 Class 150 of GCS material	2.0 Nos.
22	Equal tee having size 250 x 250 Sch. 40 of GCS material	5.0 Nos.
23	Equal tee having size 200 x 200 Sch. 40 of GCS material	4.0 Nos.
24	Equal tee having size 150 x 150 Sch. 40 of GCS material	2.0 Nos.
25	Equal tee having size 100 x 100 Sch. 40 of GCS material	4.0 Nos.
26	Equal tee having size 25 x 25 Sch. 40 of GCS material	8.0 Nos.
27	Un-equal tee having size 350 x 300 Sch. 40 of GCS material	10.0 Nos.
28	Un-equal tee having size 350 x 200 Sch. 40 of GCS material	2.0 Nos.
29	Un-equal tee having size 350 x 250 Sch. 40 of GCS material	3.0 Nos.
30	Un-equal tee having size 350 x 150 Sch. 40 of GCS material	3.0 Nos.
31	Un-equal tee having size 350 x 100 Sch. 40 of GCS material	2.0 Nos.
32	Un-equal tee having size 350 x 200 Sch. 40 of GCS material	2.0 Nos.
33	Un-equal tee having size 250 x 100 Sch. 40 of GCS material	2.0 Nos.
34	Threadolet having size 300 x 15 Sch.40 of GCS material	12.0 Nos.
35	Threadolet having size 250 x 15 Sch.40 of GCS material	10.0 Nos.
36	Threadolet having size 200 x 15 Sch.40 of GCS material	8.0 Nos.
37	Threadolet having size 150 x 15 Sch.40 of GCS material	8.0 Nos.
38	Threadolet having size 100 x 15 Sch.40 of GCS material	8.0 Nos.
39	Threadolet having size 50 x 15 Sch.40 of GCS material	6.0 Nos.
40	Elbolet having size 350 x 15 Sch. 40 of GCS material	5.0 Nos.
41	Elbolet having size 300 x 15 Sch. 40 of GCS material	5.0 Nos.
42	Elbolet having size 250 x 15 Sch. 40 of GCS material	5.0 Nos.
43	Elbolet having size 200 x 15 Sch. 40 of GCS material	5.0 Nos.
44	Elbolet having size 150 x 15 Sch. 40 of GCS material	5.0 Nos.
45	Elbolet having size 100 x 15 Sch. 40 of GCS material	5.0 Nos.
46	Elbolet having size 40 x 15 Sch. 40 of GCS material	5.0 Nos.
47	Reducer having size 400 x 350 Sch. 40 of GCS material	1.0 Nos.
48	Reducer having size 400 x 300 Sch. 40 of GCS material	4.0 Nos.
49	Reducer having size 400 x 200 Sch. 40 of GCS material	4.0 Nos.

Sr. No.	Item Description	Quantity
50	Reducer having size 350 x 300 Sch. 40 of GCS material	4.0 Nos.
51	90-elbow having size DN25 Sch. 40 of GCS material	8.0 Nos.
52	90-elbow having size DN40 Sch. 40 of GCS material	8.0 Nos.
53	90-elbow having size DN100 Sch. 40 of GCS material	12.0 Nos.
54	90-elbow having size DN150 Sch. 40 of GCS material	12.0 Nos.
56	90-elbow having size DN200 Sch. 40 of GCS material	12.0 Nos.
57	90-elbow having size DN250 Sch. 40 of GCS material	28.0 Nos.
58	90-elbow having size DN350 Sch. 40 of GCS material	26.0 Nos.
59	Flanged gate valve having size DN15 of GCS material	84.0 Nos.
61	Flanged gate valve having size DN25 of GCS material	4.0 Nos.
62	Flanged gate valve having size DN40 of GCS material	4.0 Nos.
63	Flanged gate valve having size DN150 of GCS material	6.0 Nos.
64	Flanged gate valve having size DN250of GCS material	2.0 Nos.
65	Flanged globe valve having size DN25 of GCS material	2.0 Nos.
66	Flanged globe valve having size DN40 of GCS material	1.0 Nos.
67	Flanged globe valve having size DN100 of GCS material	1.0 Nos.
68	Flanged globe valve having size DN200 of GCS material	3.0 Nos.
69	Flanged globe valve having size DN250 of GCS material	4.0 Nos.
70	Flanged check valve having size DN150 of GCS material	1.0.0 Nos.
71	Flanged check valve having size DN250 of GCS material	5.0 Nos.
72	Flanged butterfly valve having size DN200 of GCS material	5.0 Nos
73	Flanged butterfly valve having size DN250 of GCS material	18.0 Nos.
74	Flanged butterfly valve having size DN300 of GCS material	3.0 Nos.
75	Flanged butterfly valve having size DN350 of GCS material	1.0 Nos.
	M3-S8: BOQ for Waste Management System	
1	Flanged type and Manual operated swing type check valve with size DN80 of SS304L material	2.0 Nos.
2	Flanged type and Manual operated diaphragm valve with size DN80 of SS304L material	2.0 Nos.
3	Flanged type and Manual operated swing type check valve with size DN50 of SS304L material	2.0 Nos.
4	Flanged type and Manual operated diaphragm valve with size DN50 of SS304L material	2.0 Nos.
5	Flanged type and Manual operated swing type check valve with size DN50 of SS304L material	1.0 Nos.
6	Flanged type and Manual operated diaphragm valve with size DN50 of SS304L material	1.0 Nos.

Sr. No.	Item Description	Quantity
7	Flanged type and Manual operated swing type check valve with size DN50 of SS304L material	1.0 Nos.
8	Flanged type and Manual operated diaphragm valve with size DN50 of SS304L material	1.0 Nos.
9	Flanged type and Manual operated swing type check valve with size DN80 of SS304L material	1.0 Nos.
10	Flanged type and Manual operated diaphragm valve with size DN80 of SS304L material	1.0 Nos.
11	Flanged type and Manual operated diaphragm valve with size DN80 of SS304L material	3.0 Nos.
12	Flanged type and Manual operated gate valve with size DN50 of SS304L material	2.0 Nos.
13	Flanged type and Manual operated diaphragm valve with size DN80 of SS304L material	2.0 Nos.
14	Flanged type and Manual operated gate valve with size DN50 of SS304L material	2.0 Nos.
15	Flanged type and Manual operated diaphragm valve with size DN80 of SS304L material	4.0 Nos.
16	Flanged type and Manual operated gate valve with size DN50 of SS304L material	2.0 Nos.
17	Flanged type and Manual operated diaphragm valve with size DN100 of SS304L material	2.0 Nos.
18	Flanged type and Manual operated diaphragm valve with size DN100 of SS304L material	2.0 Nos.
19	Flanged type and Manual operated diaphragm valve with size DN100 of SS304L material	1.0 Nos.
20	Flanged type and Manual operated diaphragm valve with size DN100 of SS304L material	4.0 Nos.
21	Flanged type and Manual operated swing type check valve with size DN100 of SS304L material	4.0 Nos.
22	Flanged type and Manual operated diaphragm valve with size DN100 of SS304L material	4.0 Nos.
23	Flanged type and Manual operated swing type check valve with size DN50 of SS304L material	1.0 Nos.
24	Flanged type and Manual operated diaphragm valve with size DN50 of SS304L material	1.0 Nos.
25	Flanged type and Manual operated diaphragm valve with size DN100 of SS304L material	3.0 Nos.
26	Flanged type and Manual operated diaphragm valve with size DN100 of SS304L material	1.0 Nos.

Sr. No.	Item Description	Quantity
27	Flanged type and Manual operated diaphragm valve with size DN100 of SS304L material	3.0 Nos.
28	A one end socket welded other end NPT type and Manual operated diaphragm valve with size DN25 of SS304L material	10.0 Nos.
29	A one end socket welded other end NPT type and Manual operated diaphragm valve with size DN25 of SS304L material	10.0 Nos.
30	A one end socket welded other end NPT type and Manual operated gate valve with size DN15 of SS304L material	10.0 Nos.
31	A one end socket welded other end NPT type and Manual operated gate valve with size DN15 of SS304L material	6.0 Nos.
32	A one end socket welded other end NPT type and Manual operated gate valve with size DN15 of SS304L material	6.0 Nos.
33	A one end socket welded other end NPT type and Manual operated gate valve with size DN15 of SS304L material	5.0 Nos.
34	A one end socket welded other end NPT type and Manual operated gate valve with size DN15 of SS304L material	3.0 Nos.
35	Seamless pipe having size DN 100 Sch. 40 of SS-316 L material	162.0 m
36	Seamless pipe having size DN 80 Sch. 40 of SS-316 L material	146.0 m
37	Seamless pipe having size DN 50 Sch. 40 of SS-304 L material	62.0 m
38	Seamless pipe having size DN 25 Sch. 40 of SS-316 L material	30.0 m
39	90° elbow having size DN 100 Sch 40 of SS-316 L material with butt welded end type	20.0 Nos.
40	90° elbow having size DN 80 Sch 40 of SS-316 L material with butt welded end type	14.0 Nos.
41	90° elbow having size DN 50 Sch 40 of SS-316 L material with butt welded end type	20.0 Nos.
42	90° elbow having size DN 25 Sch 40 of SS-316 L material with butt welded end type	11.0 Nos.
43	Equal tee having size DN 100 Sch 40 of SS-316 L material with butt welded end type	11.0 Nos.
44	Equal tee having size DN 80 Sch 40 of SS-316 L material with butt welded end type	10.0 Nos.
45	An expander having size DN 80 x 100 Sch 40 of SS-316 L material with butt welded end type	8.0 Nos.
46	Cross having size DN 100 x 100 Sch 40 of SS-316 L material with butt welded end type	2.0 Nos.
47	WNRF flange having size DN 100 Class 150 of SS-316 L material	65.0 Nos.
48	WNRF flange having size DN 80 Class 150 of SS-316 L material	48.0 Nos.
49	WNRF flange having size DN 50 Class 150 of SS-316 L material	24.0 Nos.

Sr. No.	Item Description	Quantity
50	WNRF flange having size DN 25 Class 150 of SS-316 L material	23.0 Nos.
51	Orifice flange having size DN 100 Class 300 of SS-316 L material with WNRF end type	12.0 Nos.
52	An orifice flange having size DN 50 Class 300 of SS-316 L material with WNRF end type	4.0 Nos.
53	An orifice flange having size DN 25 Class 300 of SS-316 L material with WNRF end type	8.0 Nos.
54	Weldolet having size DN 100 x 15 Sch 40 Class 3000 of SS-316 L material	8.0 Nos.
55	Weldolet having size DN 80 x 15 Sch 40 Class 3000 of SS-316 L material	8.0 Nos.
	M3-S9: BOQ for Beam tube and inner gate cooling system	
1	Manual flanged Diaphragm Valve having size DN 15 of material SS 304L with rating 150 at Inner gate -01 inlet Valve	1.0 Nos.
2	Manual flanged Diaphragm Valve having size DN 15 of material SS 304L with rating 150 at Inner gate -02 inlet Valve	1.0 Nos.
3	Manual flanged Diaphragm Valve having size DN 15 of material SS 304L with rating 150 at Inner gate -03 inlet Valve	1.0 Nos.
4	Manual flanged Diaphragm Valve having size DN 15 of material SS 304L with rating 150 at Inner gate -04 inlet Valve	1.0 Nos.
5	Manual flanged Diaphragm Valve having size DN 15 of material SS 304L with rating 150 at Inner gate -05 inlet Valve	1.0 Nos.
6	Manual flanged Diaphragm Valve having size DN 15 of material SS 304L with rating 150 at Inner gate -06 inlet Valve	1.0 Nos.
7	Manual flanged Globe valve having size DN 15 of material SS 304L with rating 150 at Inner gate -01 Outlet Valve	1.0 Nos.
8	Manual flanged Globe valve having size DN 15 of material SS 304L with rating 150 at Inner gate -02 Outlet Valve	1.0 Nos.
9	Manual flanged Globe valve having size DN 15 of material SS 304L with rating 150 at Inner gate -03 Outlet Valve	1.0 Nos.
10	Manual flanged Globe valve having size DN 15 of material SS 304L with rating 150 at Inner gate -04 Outlet Valve	1.0 Nos.
11	Manual flanged Globe valve having size DN 15 of material SS 304L with rating 150 at Inner gate -05 Outlet Valve	1.0 Nos.
12	Manual flanged Globe valve having size DN 15 of material SS 304L with rating 150 at Inner gate -06 Outlet Valve	1.0 Nos.
13	Manual flanged Diaphragm valve having size DN 15 of material SS 304L with rating 150 at Inner gate bypass valve	1.0 Nos.
14	Manual flanged Globe valve having size DN 50 of material SS 304L	1.0 Nos.

Sr. No.	Item Description	Quantity
	with rating 150 at EWST outlet line globe valve	
15	Manual flanged Globe valve having size DN 50 of material SS 304L with rating 150 at EWST inlet line globe valve	1.0 Nos.
16	Manual flanged Check valve having size DN 50 of material SS 304L with rating 150 at Pump discharge	1.0 Nos.
17	Manual flanged Gate valve having size DN 50 of material SS 304L with rating 150 at Pump suction	1.0 Nos.
18	Pump: Centrifugal, horizontal, Drive motor: 3 phase induction motor with Flow: 100 lpm, Head: 30 mWC, Motor Operating Voltage & Frequency: 415V, 50Hz, Motor synchronous speed: 1500 RPM.	1.0 Nos.
19	Pump Suction Strainer: Vertical mesh Basket type with Flow: 100 lpm, Screen Size: 20 mesh, Allowable clean pressure drop: 1.5mWC	1.0 Nos.
20	Seamless Pipe, DN 50 Sch. 40 of material SS 304 L	350 m
21	Seamless Pipe, DN 15 Sch. 40 of material SS 304 L	100 m
22	Butt welded 900elbow, DN 50, Sch 40 of material SS 304 L	30.0 Nos.
23	Butt welded 900elbow, DN 15, Sch 40 of material SS 304 L	20.0 Nos.
24	Butt welded Tee DN 50x15, Sch 40 of material SS 304 L	12.0 Nos.
25	Butt welded Reducer DN 50x150, Sch40 of material SS 304 L	12.0 Nos.
26	Butt welded Flange DN 50 of material SS 304 L	14.0 Nos.
27	Butt welded Flange DN 15 of material SS 304 L	36.0 Nos.
	M3-S10: BOQ for Fuel Test Loop	
1	Main Loop Pump: Centrifugal Canned Motor Type; Single volute, horizontal end suction, vertical discharge, single stage horizontal mounted. Fluid Handled: DM water Rated Flow: 4.5 kg/sec Rated Head: 45mWC Rated Speed: 1500/3000 rpm Design Pressure: 200 bar Design Temperature: 350°C Operating Temperature: 260-330°C SS-316L	2.0 Nos.
2	Shut-Down Cooling Pump: Centrifugal Canned Motor Type; Single volute, horizontal end suction, vertical discharge, single stage horizontal mounted. Fluid Handled: DM water Rated Flow: 2 kg/sec Rated Head: 45mWC Rated Speed: 3000 rpm Design Pressure: 200 bar Design Temperature: 350°C Operating Temperature: 260-330°C SS-316L	2.0 Nos.
3	Make-Up Pump: Reciprocating metering pump with variable discharge, horizontal mounted with PRV and pulsation dampener Fluid Handled: DM water Rated Flow: 0-240 kg/hr Design Pressure: 200 bar Design Temperature: 100°C Operating Temperature: 30-40°C SS-316L	2.0 Nos.
4	Fast Filling Pump: Single stage centrifugal pump with mechanical seal, Horizontal Mounted Fluid Handled: DM water Rated Flow: 6	1.0 Nos.

Sr. No.	Item Description	Quantity
	m3/hr (100lpm) Rated Head: 20 mWC Design Pressure: 10 bar Design Temperature: 60°C Operating Temperature: 30-40°C SS-316L	
5	Dowtherm Pump: Single stage centrifugal pump with mechanical seal, Horizontal Mounted Fluid Handled: Dowtherm-A Rated Flow: 36 m3/hr (600lpm) Rated Head: 45mWC Design Pressure: 15 bar Design Temperature: 200°C Operating Temperature: 140-180°C SS-316L	2.0 Nos.
6	Catch Tank Pump: Single stage centrifugal pump with mechanical seal, Horizontal Mounted Fluid Handled: DM water Rated Flow: 6 m3/hr (100lpm) Rated Head: 40 mWC Design Pressure: 20bar Design Temperature: 150°C Operating Temperature: 50°C SS-316L	1.0 Nos.
7	Jacket Cooling Pump: Single stage centrifugal pump with mechanical seal, Horizontal Mounted Fluid Handled: DM water Rated Flow: 9 m3/hr (150lpm) Rated Head: 45mWC Design Pressure: 20 bar, Design Temperature: 150°C Operating Temperature: 50°C SS-316L	2.0 Nos.
8	Main Loop Cooler: Shell & Tube HEX with U-type tubes (AEU); Horizontal Mounted: TEMA Class R Heat Rating: 800 kW Shell: DN250 Sch.40 (SS-304L) Tube: 19.05mm OD x 13 BWG (SS-316L) Nos. of U-tubes: 30 Length: 1800 mm Tube-side - DM water Design Pressure: 200 bar Design Temperature: 350°C Shell-side - Dowtherm A Design Pressure: 15 bar Design Temperature: 200°C SS-316L/SS-304L	1.0 Nos.
9	Dowtherm Cooler: Shell & Tube HEX with U-type tubes (AEU); Horizontal Mounted: TEMA Class R Heat Rating: 810 kW Shell: DN400 Sch.40 (SS-316L) Tube: 19.05mm OD x 16 BWG) Nos. of U-tubes: 80 Length: 2200 mm Tube-side - Cooling Tower water Design Pressure: 10 bar Design Temperature: 60°C Shell-side - Dowtherm A Design Pressure: 15 bar Design Temperature: 200°C	1.0 Nos.
10	Purification Heat Exchanger-I (Interchanger): Double pipe U-type heat exchanger Heat Rating: 35 kW Design Pressure: 200 bar Design Temperature: 350°C SS-316L	1.0 Nos.
11	Purification Heat Exchanger-II: Double pipe U-type heat exchanger Heat Rating: 10 kW Design Pressure: 200 bar Design Temperature: 350°C SS-316L	1.0 Nos.
12	Jacket Heat Exchanger: Plate type Heat Exchanger Heat Rating: 60 kW Hot Side: DM water Cold Side: Cooling Tower Water Design Pressure: 20 bar Design Temperature: 150°C, SS-316L	1.0 Nos.
13	Main Loop Heater: Cylindrical pressure vessel with immersion type U-shaped electrical heater elements, Thyristor controller for heater	1.0 Nos.

Sr. No.	Item Description	Quantity
	power control, Fluid Handled: DM water Heater rating: 120 kW Flow rate: 4.5 kg/sec Design Pressure: 200 bar Design Temperature: 350°C Operating Temperature: 280-330°C SS-316L	
14	Ion-Exchanger Vessel: Cylindrical Pressure Vessel, vertical mounted, Lead shielding, mm Fluid Handled: DM water Design Pressure: 200 bar Design Temperature: 60°C SS-316L	5.0 Nos.
15	Filter Vessel: Cylindrical Pressure Vessel, vertical, Lead shielding Fluid Handled: DM water Design Pressure: 200 bar Design Temperature: 60°C SS-316L	5.0 Nos.
16	Pressurizer: Cylindrical pressure vessel with immersion electrical heater elements, Thyristor controller for heater power control, Fluid Handled: DM water Heater rating: 50 kW Design Pressure: 200 bar and Temperature: 370°C ; Operating Pressure: 175 bar & Temperature: 355°C Vessel pressure protection: Relief valves/rupture discs, Pressure and level control, Pressure control requirement: ±0.5 bar Level Control requirement: ±20 mm SS-316L	1.0 Nos.
17	Dowtherm Surge Tank: Cylindrical Pressure Vessel, vertical mounted Fluid Handled: Dowtherm-A Design Pressure: 15 bar Design Temperature: 200°C Shell OD: 500 mm Shell Height: 1500 mm SS-316L	1.0 Nos.
18	Jacket Cooling Expansion Tank: Cylindrical Pressure Vessel, vertical mounted Fluid Handled: DM water Design Pressure: 20 bar Design Temperature: 150°C Shell OD: 400 mm Shell Height: 1000 mm SS-316L	1.0 Nos.
19	Delayed Neutron Tank: Cylindrical Pressure Vessel, vertical mounted Fluid Handled: DM water Design Pressure: 200 bar Design Temperature: 350°C Shell OD: 200 mm Shell Height: 500 mm SS-316L	1.0 Nos.
20	Catch Tank: Cylindrical Pressure Vessel, vertical mounted Fluid Handled: DM water Design Pressure: 20 bar Design Temperature: 150°C Shell OD: 1000 mm Shell Height: 1800 mm SS-316L	1.0 Nos.
21	Accumulators: Cylindrical Pressure Vessel, vertical mounted Fluid Handled: DM water Design Pressure: 80 bar Design Temperature: 80°C Shell OD: 750 mm Shell Height: 1800 mm SS-316L	2.0 Nos.
22	Make-Up water polishing Unit: Vertical mounted skid consisting of polishing unit (mixed bed ion exchangers &de-oxygenators) Rated flow: 20lpm; Target conductivity: < 1μS/cm; Design Pressure: 5 bar; Temperature: 50°C SS-304L	1.0 Nos.
23	Make-Up water storage tank: Cylindrical Pressure Vessel, vertical mounted Fluid Handled: DM water Design Pressure: 15 bar Design Temperature: 60°C Shell OD: 750 mm Shell Height: 1800 mm SS-	1.0 Nos.

Sr. No.	Item Description	Quantity
	316L	
24	Chemical addition station: Glove-box/Fume hood with dedicated ventilation system for sampling and addition of chemicals to the main loop system, Design Pressure: 200 bar Design Temperature: 60°C	1.0 Nos.
25	System Strainer (Y-Type): Design Pressure: 200 bar Design Temperature: 350°C	5.0 Nos.
26	Hot Insulation over Piping, Valves, and Equipment	As per the layout
27	Seamless pipe having size DN15 Sch.40 of SS-316L material	156.0 m
28	Seamless pipe having size DN25 Sch.40 of SS-316L material	110.0 m
29	Seamless pipe having size DN40 Sch.40 of SS-316L material	120.0 m
30	Seamless pipe having size DN50 Sch.40 of SS-316L material	60.0 m
31	Seamless pipe having size DN50 Sch.80 of SS-316L material	180.0 m
32	Seamless pipe having size DN80 Sch.40 of SS-316L material	50.0 m
33	Equal tee having size DN15 Sch.40 of SS-316L material with socket welded end	50.0 Nos.
34	Equal tee having size DN25 Sch.40 of SS-316L material with socket welded end	28.0 Nos.
35	Equal tee having size DN40 Sch.40 of SS-316L material with butt welded end	6.0 Nos.
36	Equal tee having size DN50 Sch.40 of SS-316L material with butt welded end	5.0 Nos.
37	Equal tee having size DN50 Sch.80 of SS-316L material with butt welded end	22.0 Nos.
38	Equal tee having size DN80 Sch.40 of SS-316L material with butt welded end	7.0 Nos.
39	Un-equal tee having size 80 x 50 Sch.40 of SS-316L with butt welded end	5.0 Nos.
40	Un-equal tee having size 50 x 40 Sch.80 of SS-316L with butt welded end	5.0 Nos.
41	Un-equal tee having size 50 x 25 Sch.80 of SS-316L with butt welded end	5.0 Nos.
42	Un-equal tee having size 50 x 15 Sch.80 of SS-316L with butt welded end	5.0 Nos.
43	Un-equal tee having size 40 x 25 Sch.40 of SS-316L with butt welded end	5.0 Nos.
44	Un-equal tee having size 40 x 15 Sch.40 of SS-316L with butt welded end	6.0 Nos.

Sr. No.	Item Description	Quantity
45	Un-equal tee having size 25 x 15 Sch.40 of SS-316L with butt welded end	5.0 Nos.
46	Reducer having size 50 x 25 Sch.80 of SS-316L material with weld ends	5.0 Nos.
47	Reducer having size 80 x 40 Sch.40 of SS-316L material with weld ends	5.0 Nos.
48	A cross having size 50 x 50 Sch 40 of SS-316L material with weld ends	5.0 Nos.
49	90° LR bend having size DN50 Sch.80 of SS-316L material with butt weld end	71.0 Nos.
50	90° LR bend having size DN80 Sch.40 of SS-316L material with butt weld end	21.0 Nos.
51	90° LR bend having size DN40 Sch.40 of SS-316L material with butt weld end	48.0 Nos.
52	90° LR bend having size DN25 Sch.40 of SS-316L material with butt weld end	60.0 Nos.
53	90° LR bend having size DN15 Sch.40 of SS-316L material with butt weld end	170.0 Nos.
54	Weldolet having size 50 x 15 Sch.80 of SS-316L material	30.0 Nos.
55	Weldolet having size 80 x 15 Sch.40 of SS-316L material	20.0 Nos.
56	Weldolet having size 40 x 15 Sch.40 of SS-316L material	12.0 Nos.
57	Elbolet having size 80 x 15 Sch 40 of SS-316L material	5.0 Nos.
58	Elbolet having size 80 x 15 Sch 40 of SS-316L material	5.0 Nos.
59	Elbolet having size 80 x 15 Sch 40 of SS-316L material	5.0 Nos.
60	Gate valve having size DN15 Sch.40 of SS-316L material with welded ends	38.0 Nos.
61	Gate valve having size DN25 Sch.40 of SS-316L material with welded ends	16.0 Nos.
62	Gate valve having size DN40 Sch.80 of SS-316L material with welded ends	1.0 Nos.
63	Gate valve having size DN40 Sch.40 of SS-316L material with welded ends	8.0 Nos.
64	Gate valve having size DN50 Sch.40 of SS-316L material with welded ends	8.0 Nos.
65	Gate valve having size DN50 Sch.80 of SS-316L material with welded ends	15.0 Nos.
66	Gate valve having size DN80 Sch.40 of SS-316L material with welded ends	6.0 Nos.
67	Globe valve having size DN15 Sch.40 of SS-316L material with	6.0 Nos.

Sr. No.	Item Description	Quantity
	welded ends	
68	Globe valve having size DN25 Sch.40 of SS-316L material with welded ends	2.0 Nos.
69	Globe valve having size DN40 Sch.40 of SS-316L material with welded ends	4.0 Nos.
70	Globe valve having size DN50 Sch.80 of SS-316L material with welded ends	6.0 Nos.
71	Globe valve having size DN80 Sch.40 of SS-316L material with welded ends	6.0 Nos.
72	A pneumatic control valve having size DN50 Sch.80 of SS-316L material with welded ends	4.0 Nos.
73	A pneumatic control valve having size DN80 Sch.40 of SS-316L material with welded ends	1.0 Nos.
74	A pneumatic control valve having size DN25 Sch.40 of SS-316L material with welded ends	1.0 Nos.
75	Check valve having size DN25 Sch.40 of SS-316L material with welded ends	5.0 Nos.
76	Check valve having size DN40 Sch.40 of SS-316L material with welded ends	3.0 Nos.
77	Check valve having size DN50 Sch.80 of SS-316L material with welded ends	4.0 Nos.
78	Check valve having size DN80 Sch.40 of SS-316L material with welded ends	3.0 Nos.
79	A Pressure relief valve (Spring loaded with balanced bellows) having size DN15/DN25 of SS-316L with welded ends	7.0 Nos.
80	Rupture Discs Assembly (DN50)	2.0 Nos.
81	Rupture Discs Assembly (DN25)	5.0 Nos.
	M3-S11: BOQ for Corrosion Test Loop	
	Not in the scope of EPC document	
	M3-S12: BOQ for Pneumatic Carrier Facility	
1	Manually operated Sending/receiving station having Rectangular box made of SS 304L, Dimensions of around 0.3 x 0.2 x 0.2 m, Hinged lid at top, Pipe connections on four sides, Ball valve at bottom	1.0 Nos.
2	Glove box with Fume hood made of SS 304 L, 1.5 m x 1.5 m SS hood with glass box and working platform	1.0 Nos.
3	With specific fixed design Pneumatic Carrier Assembly made of Aluminium, consisting of capsule sending & receiving pipe & capsule seat	1.0 Nos.

Sr. No.	Item Description	Quantity
4	Seamless Pipe having size 25 NB Sch. 40 and of material SS 304L	30.0 m
5	Seamless Pipe having size 15 NB Sch. 40 and of material SS 304L	40.0 m
6	Equal Tee having size 25 x 25 Sch. 40 and of material SS 304L	1.0 Nos.
7	Equal Tee having size 15 x 15 x Sch. 40 and of material SS 304L	2.0 Nos.
8	Unequal Tee having size 15 x 25 Sch. 40 and of material SS 304L	5.0 Nos.
9	90 Elbow having size 25 NB Sch. 40 and of material SS 304L	10.0 Nos.
10	90 Elbow having size 15 NB Sch. 40 and of material SS 304L	20.0 Nos.
11	Reducer having size 25 x 15 Sch. 40 and of material SS 304L	2.0 Nos.
12	Pressure regulating valve Flanged having size 15 NB Sch. 40 and of material SS 304L	4.0 Nos.
13	Solenoid valve Flanged having size 15 NB Sch. 40 and of material SS 304L	8.0 Nos.
14	Socked welded diaphragm valve having size 25 NB Sch. 40 and of material SS 304L	1.0 Nos.
15	Socked welded diaphragm valve having size 15 NB Sch. 40 and of material SS 304L	12.0 Nos.
16	Flange - Socket Welded having size 15 NB Class 150 and of material SS 304L	30.0 Nos.
17	Flange - Socket Welded having size 25 NB Class 150 and of material SS 304L	8.0 Nos.
18	Pipe having Size OD 33.4mm ID 27.86 mm Material: Al-5052-O (Boron <10ppm)	50.0 m
19	Pipe having Size OD 21.3mm ID 15.76mm Material: Al-5052-O (Boron <10ppm)	50.0 m
20	Weld neck flange of thickness 50 mm for Pipe size OD 33.4mm ID 27.86 mm Material: Al-5052-O (Boron <10ppm)	5.0 Nos.
21	Weld neck flange of thickness 50 mm for Pipe size OD 21.3mm ID 15.76mm Material: Al-5052-O (Boron <10ppm)	5.0 Nos
M4	**Plant Electrical Works Module**	
	M4-S1: BOQ for Plant Electrical System	
	BOQ for Plant Electrical System- Class IV	
1	Supply, Installation, Testing and Commissioning (SITC) of 11kV Switchgear panel (i.e. Bus-A).	1.0 Nos.
2	SITC of 11kV Switchgear panel (i.e. Bus-B).	1.0 Nos.
3	SITC of 11/6.9 kV, 8 MVA, ONAN, Class F insulated Transformer.	2.0 Nos.
4	SITC of 6.6kV Switchgear panel (i.e. Bus-C)	1.0 Nos.
5	SITC of 6.6kV Switchgear panel (i.e. Bus-D)	1.0 Nos.
6	SITC of 11/0.433 kV, 2.5 MVA, ONAN, Class F insulated	4.0 Nos.

Sr. No.	Item Description	Quantity
	Transformer, Maximum total loss of the transformer shall be as per ECBC	
7	SITC of 415 V Switchgear panel (i.e. Bus-E)	1.0 Nos.
8	SITC of 415 V Switchgear panel (i.e. Bus-F)	1.0 Nos.
9	SITC of 415 V Switchgear panel (i.e. Bus-G).	1.0 Nos.
10	SITC of 415 V Switchgear panel (i.e. Bus-H).	1.0 Nos.
11	SITC of MCC 401 Panel	1.0 Nos.
12	SITC of MCC 402 Panel	1.0 Nos.
13	SITC of MCC 403 Panel	1.0 Nos.
14	SITC of MCC 404 Panel	1.0 Nos.
15	SITC of MCC 405 Panel	1.0 Nos.
16	SITC of MCC 406 Panel	1.0 Nos.
17	SITC of MCC 407 Panel	1.0 Nos.
18	SITC of MCC 408 Panel	1.0 Nos.
19	SITC of MCC 409 Panel	1.0 Nos.
20	SITC of MCC 410 Panel	1.0 Nos.
21	SITC of MCC 411 Panel	1.0 Nos.
22	SITC of MCC 412 Panel	1.0 Nos.
23	SITC of PMCC Panels (Incomer and tie- 800A, 4 pole, 65kA ACB 1 no. each, Outgoing 63A, 4 pole, 65kA MCCB 10 nos.)	8.0 Nos.
24	Design, Engineering, Supply, Installation, Testing and Commissioning of internal electrification associated with Class IV system.	Lot
	BOQ for Class III	
25	SITC of 750 kVA DG, including all auxiliaries (i.e. day tank, AMF panel, battery chargers, etc.). (a) DG set shall be qualified as per IEEE 387. (b) Seismic qualification of DG set as per IEEE 344. Please provide a separate cost breakdown for the qualification (testing and analysis). (c) Environmental qualification as per BIS 9000. (d) Independent Verification & Validation (as per AERB/SG/D-25) shall be done for computer-based components/electronic cards/electronic or microprocessor-based controllers/numerical relays.	3.0 Nos.
26	SITC of APFC panel of 375kVAr at 415V with detuned reactor of 5.67% for each step: (a) Step configuration: 4X100kVAr + 6X50kVAr + 2X25kVAr at 600V. (b) 15 stages microprocessor based APFC relay controller should be used. (c) APP heavy duty capacitor with self-healing. (d) Impregnate type: Non-PCB capacitor liquid. (e)Discharge device time: Discharge up to 50V in less than 60secs.	2.0 Nos.

Sr. No.	Item Description	Quantity
	(f) Testing: Provide the separate cost breakdown for Type test, routine test & acceptance test should be as per relevant BIS/IEC standard (IEC 60831)	
27	SITC of 415 V Switchgear panel (i.e. Bus-J).	1.0 Nos.
28	SITC of 415 V Switchgear panel (i.e. Bus-K).	1.0 Nos.
29	SITC of 415 V Switchgear panel (i.e. Bus-L).	1.0 Nos.
30	SITC of MCC 301 Panel	1.0 Nos.
31	SITC of MCC 302 Panel	1.0 Nos.
32	SITC of MCC 303 Panel	1.0 Nos.
33	SITC of MCC 304 Panel	1.0 Nos.
34	SITC of MCC 305 Panel	1.0 Nos.
35	SITC of MCC 306 Panel	1.0 Nos.
36	SITC of MCC 307 Panel	1.0 Nos.
37	SITC of MCC 308 Panel	1.0 Nos.
38	SITC of MCC 309 Panel	1.0 Nos.
39	SITC of MCC 310 Panel	1.0 Nos.
40	SITC of MCC 311 Panel	1.0 Nos.
41	SITC of MCC 312 Panel	1.0 Nos.
42	Design, Engineering, Supply, Installation, Testing and Commissioning of internal electrification associated with Class III system.	1.0 Nos.
	Note: Seismic qualification of Switchgear and MCC panels of Class-III shall be done.Independent Verification & Validation (as per AERB/SG/D-25) shall be done for computer-based components/electronic cards/electronic or microprocessor-based electronics releases used in breakers & numerical relays.	
	BOQ for Class II	
43	SITC of complete dual redundant 300 kVA, three phase four wire, 415V, 50 Hz, Power UPS (PUPS) along with static bypass switch. (a) PUPS shall be qualified as per IEEE 650. (b) Seismic qualification of PUPS as per IEEE 344 Please provide a separate cost breakdown for the qualification, (testing and analysis). (c) Independent Verification & Validation (as per AERB/SG/D-25) shall be done for computer-based components/electronic cards/electronic or microprocessor-based controllers/numerical relays. (d) Climatic test as per BIS 9000 is required.	2.0 Nos.
44	SITC of complete dual redundant 30 kVA, single phase, 240V, 50 Hz, Control UPS (CUPS) along with static bypass switch. (a) CUPS shall be qualified as per IEEE 650. (b) Seismic qualification of CUPS	4.0 Nos.

Sr. No.	Item Description	Quantity
	as per IEEE 344 Please provide a separate cost breakdown for the qualification, (testing and analysis). (c) Independent Verification & Validation (as per AERB/SG/D-25) shall be done for computer based components/electronic cards/electronic or microprocessor based controllers/numerical relays. (d) Climatic test as per BIS 9000 is required.	
45	SITC of 1 kVA, single phase, 240V, 50 Hz, Inverter: (a) Inverter shall be qualified as per IEEE 650. (b) Seismic qualification of Inverter as per IEEE 344 Please provide a separate cost breakdown for the qualification, (testing and analysis). (c) Independent Verification & Validation (as per AERB/SG/D-25) shall be done for computer based components/electronic cards/electronic or microprocessor based controllers/numerical relays. (d) Climatic test as per BIS 9000 is required.	4.0 Nos.
46	SITC of PUPS Boost Charger of rating 500 VDC, 250 A and having capability of float/equalize/boost charging the power battery. (a) Testing of PUPS Boost Charger shall be done as per relevant industrial standards BIS/IEC/IEEE. (b) Climatic test as per BIS 9000 is required.	1.0 Nos.
47	SITC of CUPS Boost Charger of rating 165 VDC, 200 A and having capability of float/equalize/boost charging the control battery. (a) Testing of CUPS Boost Charger shall be done as per relevant industrial standards BIS/IEC/IEEE. (b) Climatic test as per BIS 9000 is required.	1.0 Nos.
48	SITC of PUPS battery bank of rating 1500 Ah at C10 rate, lead acid, Plante type battery bank with 180 number of cells along with all associated accessories such as steel racks, stands connectors etc. Seismic qualification of battery bank along with stand as per IEEE 344. Please provide a separate cost breakdown for the qualification, (testing and analysis).	2.0 Nos.
49	SITC of CUPS battery bank of rating 1180 Ah at C10 rate, lead acid, Plante type battery bank with 60 number of cells along with all associated accessories such as steel racks, stands connectors etc. Seismic qualification of battery bank along with stand as per IEEE 344. Please provide a separate cost breakdown for the qualification, as per (testing and analysis).	4.0 Nos.
50	SITC of 415 V Switchgear panel (i.e. Bus-M).	1.0 Nos.
51	SITC of 415 V Switchgear panel (i.e. Bus-N).	1.0 Nos.
52	SITC of 500 V DC Switchgear panel (3 nos. of 630 A, DC MCCB, and 1 no. 250 A with Electronic Trip Release)	2.0 Nos.
53	SITC of 200 V DC Switchgear panel (4 nos. of 200 A, DC MCCB	4.0 Nos.

Sr. No.	Item Description	Quantity
	with Electronic Trip Release)	
54	SITC of MCC 201 Panel	1.0 Nos.
55	SITC of MCC 202 Panel	1.0 Nos.
56	Supply, Installation, Testing and Commissioning of load cell for the testing of 300 kVA Power UPS and 1500 Ah battery with nominal voltage of 360 VDC (Float voltage: 405 VDC)	1.0 Nos.
57	SITC of load cell for the testing of 30 kVA Control UPS and 1180 Ah battery with nominal voltage of 120 VDC (Float voltage: 135 VDC)	1.0 Nos.
58	SITC of Spare cell charger-1 of rating 125A, 20 VDC (6 nos. of spare cells)	1.0 Nos.
59	SITC of Spare cell charger-2 of rating 250A, 20 VDC (6 nos. of spare cells)	1.0 Nos.
60	Design, Engineering, Supply, Installation, Testing and Commissioning of internal electrification associated with Class II system.	Lot
	Note: Seismic qualification of Switchgear and MCC panels of Class-II shall be done.Independent Verification & Validation (as per AERB/SG/D-25) shall be done for computer-based components/electronic cards/electronic or microprocessor-based electronics releases used in breakers & numerical relays.	
	BOQ for Class I	
61	SITC of ACVR (Float Charger (FC) + Boost Charger (BC)): Rating of Float Charger: 121 VDC, 225A, Rating of Boost Charger: 160 VDC, 125A, (A) Qualification of ACVR (FC): (a) ACVR (FC) shall be qualified as per IEEE 650. (b) Seismic qualification of ACVR (FC) as per IEEE 344. Please provide a separate cost breakdown for the qualification, (testing and analysis). (c) Independent Verification & Validation (as per AERB/SG/D-25) shall be done for computer based components/electronic cards/electronic or microprocessor based controllers/numerical relays. (d) Climatic test as per BIS 9000 is required. (B) Qualification of ACVR (BC): (a) Testing of Boost Charger shall be done as per relevant industrial standards BIS/IEC/IEEE. (b) Climatic test as per BIS 9000 is required.	3.0 Nos.
62	SITC of CPS (Float Charger) for Main Control Centre and Supplementary Control Centre: Rating of Float Charger: 29.25 VDC, 160A Qualification of CPS (FC): (a) CPS (FC) shall be qualified as per IEEE 650. (b) Seismic qualification of CPS (FC) as per IEEE 344. Please provide a separate cost breakdown for the qualification, (testing and analysis). (c) Independent Verification & Validation (as per AERB/SG/D-25) shall be done for computer based components/electronic cards/electronic or microprocessor based	9.0 Nos.

Sr. No.	Item Description	Quantity
	controllers/numerical relays. (d) Climatic test as per BIS 9000 is required.	
63	SITC of CPS (Boost Charger) for Main Control Centre and Supplementary Control Centre, Rating of Boost Charger: 35.75 VDC, 110A, Qualification of CPS (BC): (a) Testing of CPS Boost Charger shall be done as per relevant industrial standards BIS/IEC/IEEE. (b) Climatic test as per BIS 9000 is required.	2.0 Nos.
64	SITC of Class I battery bank of rating 750 Ah at C10 rate, lead acid, Plante type battery bank with 55 number of cells along with all associated accessories such as steel racks, stands connectors etc. Seismic qualification of battery bank along with stand is required. Please provide a separate cost breakdown for the qualification, (testing and analysis).	2.0 Nos.
65	SITC of CPS battery bank of rating 645 Ah at C10 rate for Main Control Centre, lead acid, Plante type battery bank with 13 number of cells along with all associated accessories such as steel racks, stands connectors etc. Seismic qualification of battery bank along with stand is required. Please provide a separate cost breakdown for the qualification, (testing and analysis).	4.0 Nos.
66	SITC of CPS battery bank of rating 535 Ah at C10 rate for Supplementary Control Centre, lead acid, Plante type battery bank with 13 number of cells along with all associated accessories such as steel racks, stands connectors etc. Seismic qualification of battery bank along with stand is required. Please provide a separate cost breakdown for the qualification, (testing and analysis).	3.0 Nos.
67	SITC of 110 V DC Switchgear panel (Bus-P), alongwith Ground fault monitoring system and interlocks	1.0 Nos.
68	SITC of 110 V DC Switchgear panel (Bus-Q), alongwith Ground fault monitoring system and interlocks	1.0 Nos.
69	SITC of 24V DC panel for main control centre,alongwith Ground fault monitoring system and interlocks	4.0 Nos.
70	SITC of 24 V DC panel for supplementary control centre, alongwith Ground fault monitoring system and interlocks	3.0 Nos.
71	SITC of 200V DC Switchgear panel (4 nos. of 200 A, DC MCCB with Electronic Trip Release)	2.0 Nos.
72	SITC of load cell for the testing of 750 Ah battery with nominal voltage of 110 VDC (Float voltage: 121.5 VDC)	1.0 Nos.
73	SITC of load cell for the testing of 645 Ah battery with nominal voltage of 26 VDC (Float voltage: 29.25 VDC)	1.0 Nos.
74	SITC of load cell for the testing of 535 Ah battery with nominal voltage of 26 VDC (Float voltage: 29.25 VDC)	1.0 Nos.

Sr. No.	Item Description	Quantity
75	Design, Engineering, Supply, Installation, Testing and Commissioning of internal electrification associated with Class I system.	Lot
	Note: Seismic qualification of Switchgear of Class-I shall be done.Independent Verification & Validation (as per AERB/SG/D-25) shall be done for computer-based components/electronic cards/electronic or microprocessor-based electronics releases used in breakers & numerical relays.	
	Cabling	
76	SITC of 11 kV (E), 3CX400 sqmm, Al, XLPE insulated, FRLS inner and outer sheath, armoured cable	2000.0 m
77	SITC of 6.6 kV, 3CX70 sqmm, Cu, XLPE insulated, FRLS inner and outer sheath, armoured cable	2000.0 m
78	SITC of 1.1 kV, 3.5CX400 sqmm, Al, XLPE insulated, FRLS inner and outer sheath, armoured cable	2500.0 m
79	SITC of 1.1 kV, 3.5CX300 sqmm, Al, XLPE insulated, FRLS inner and outer sheath, armoured cable	5000.0 m
80	SITC of 1.1 kV, 3.5CX240 sqmm, Al, XLPE insulated, FRLS inner and outer sheath, armoured cable	2500.0 m
81	SITC of 1.1 kV, 4CX185 sqmm, Cu, EPR insulated, Unarmoured, EVA sheathed Fire Survival Cable	500.0 m
82	SITC of 1.1 kV, 3.5CX185 sqmm, Al, XLPE insulated, FRLS inner and outer sheath, armoured cable	1000.0 m
83	SITC of 1.1 kV, 3.5CX150 sqmm, Al, XLPE insulated, FRLS inner and outer sheath, armoured cable	500.0 m
84	SITC of 1.1 kV, 3CX120 sqmm, Al, XLPE insulated, FRLS inner and outer sheath, armoured cable	500.0 m
85	SITC of 1.1 kV, 3CX95 sqmm, Al, XLPE insulated, FRLS inner and outer sheath, armoured cable	500.0 m
86	SITC of 1.1 kV, 4CX50 sqmm, Cu, EPR insulated, Unarmoured, EVA sheathed Fire Survival Cable	500.0 m
87	SITC of 1.1 kV, 3CX50 sqmm, Al, XLPE insulated, FRLS inner and outer sheath, armoured cable	2000.0 m
88	SITC of 1.1 kV, 3CX35 sqmm, Al, XLPE insulated, FRLS inner and outer sheath, armoured cable	5000.0 m
89	SITC of 1.1 kV, 4CX16 sqmm, Cu, EPR insulated, Unarmoured, EVA sheathed Fire Survival Cable	2000.0 m
90	SITC of 1.1 kV, 3CX10 sqmm, Cu, XLPE insulated, FRLS inner and outer sheath, armoured cable	2000.0 m
91	SITC of 1.1 kV, 3CX6 sqmm, Cu, XLPE insulated, FRLS inner and	3000.0 m

Sr. No.	Item Description	Quantity
	outer sheath, armoured cable	
92	SITC of 1.1 kV, 2CX6 sqmm, Cu, XLPE insulated, FRLS inner and outer sheath, armoured cable	5000.0 m
93	SITC of 1.1 kV, 3CX4 sqmm, Cu, EPR insulated, Unarmoured, EVA sheathed Fire Survival Cable	2000.0 m
94	SITC of 1.1 kV, 3CX4 sqmm, Cu, XLPE insulated, FRLS inner and outer sheath, armoured cable	20000.0 m
95	SITC of 1.1 kV, 3CX1.5 sqmm, Cu, XLPE insulated, FRLS inner and outer sheath, armoured cable	10000.0 m
96	SITC of 1.1 kV, 2CX4 sqmm, Cu, XLPE insulated, FRLS inner and outer sheath, armoured cable	10000.0 m
97	SITC of 1.1 kV, 2CX1.5 sqmm, Cu, XLPE insulated, FRLS inner and outer sheath, armoured cable	5000.0 m
	Cable termination	
98	SITC of 11 kV, 3CX400 sqmm, indoor type termination	65.0 Nos.
99	SITC of 6.6 kV, 3CX70 sqmm, indoor type termination	35.0 Nos.
100	SITC of 1.1 kV, 3.5CX400 sqmm, indoor type termination	50.0 Nos.
101	SITC of 1.1 kV, 3.5CX300 sqmm, indoor type termination	50.0 Nos.
102	SITC of 1.1 kV, 3.5CX240 sqmm, indoor type termination	75.0 Nos.
103	SITC of 1.1 kV, 4CX185 sqmm, indoor type termination	50.0 Nos.
104	SITC of 1.1 kV, 3.5CX185 sqmm, indoor type termination	75.0 Nos.
105	SITC of 1.1 kV, 3.5CX150 sqmm, indoor type termination	75.0 Nos.
106	SITC of 1.1 kV, 3CX120 sqmm, indoor type termination	75.0 Nos.
107	SITC of 1.1 kV, 3CX95 sqmm, indoor type termination	100.0 Nos.
108	SITC of 1.1 kV, 4CX50 sqmm, indoor type termination	100.0 Nos.
109	SITC of 1.1 kV, 3CX50 sqmm, indoor type termination	100.0 Nos.
110	SITC of 1.1 kV, 3CX35 sqmm, indoor type termination	125.0 Nos.
111	SITC of 1.1 kV, 4CX16 sqmm, indoor type termination	125.0 Nos.
112	SITC of 1.1 kV, 3CX10 sqmm, indoor type termination	150.0 Nos.
113	SITC of 1.1 kV, 3CX6 sqmm, indoor type termination	150.0 Nos.
114	SITC of 1.1 kV, 2CX6 sqmm, indoor type termination	150.0 Nos.
115	SITC of 1.1 kV, 3CX4 sqmm, indoor type termination	300.0 Nos.
116	SITC of 1.1 kV, 2CX4 sqmm, indoor type termination	150.0 Nos.
117	SITC of 1.1 kV, 3CX1.5 sqmm, indoor type termination	150.0 Nos.
118	SITC of 1.1 kV, 2CX1.5 sqmm, indoor type termination	150.0 Nos.
	Bus-Duct system	
119	SITC of Cu, 4000A, 65 kA (1sec) Sandwich type bus-duct	100.0 m

Sr. No.	Item Description	Quantity
120	SITC of Cu, 3200A, 65 kA (1sec) Sandwich type bus-duct	70.0 m
121	SITC of Cu, 1600A, 65 kA (1sec) Sandwich type bus-duct: Seismic qualification of bus duct support system as per IEEE 344. Please provide a separate cost breakdown for the qualification (testing and analysis).	120.0 m
	Cable tray	
122	Supply and Installation of GI cable tray of 600 mm ladder type straight length along with its support as per the relevant standard	3500.0 m
123	Supply and Installation of GI cable tray of 300 mm ladder type straight length along with its support as per the relevant standard	1000.0 m
124	Supply and Installation of GI cable tray of 450 mm ladder type straight length along with its support as per the relevant standard	500.0 m
125	Supply and Installation of GI cable tray of 350 mm Solid type straight length along with its support as per the relevant standard	500.0 m
126	Supply and Installation of GI cable tray of 300 mm Solid type straight length along with its support as per the relevant standard	500.0 m
127	Supply and Installation of GI cable tray of 150 mm Solid type straight length along with its support as per the relevant standard	2400.0 m
128	Supply and Installation of GI cable tray of 100 mm Solid type straight length along with its support as per the relevant standard	1800.0 m
	Earthing and Lightning system	
129	SITC of 500kcmil Copper annealed soft drawn stranded conductor	10000.0 m
130	SITC of 50x6 mm copper strip	1000.0 m
131	SITC of 25x6 mm copper strip	2000.0 m
132	SITC of 25x3 mm copper strip	1000.0 m
133	SITC of 12x3 mm copper strip	1000.0 m
134	SITC of 8 SWG Cu wires	5000.0 m
135	SITC of 50x6 mm GI strip	2000.0 m
136	SITC of 25x8 mm GI strip	5000.0 m
137	SITC of Test link box (for GI strip of 25*8 mm2)	50.0 Nos.
138	SITC of 25x6 mm GI strip	8000.0 m
139	SITC of Test link box (for GI strip of 25*6 mm2)	65.0 Nos.
140	SITC of 20 mm dia. Cu Solid earthing rod	40.0 Nos.
141	SITC of 40 mm dia. MS Solid earthing rod	100.0 Nos.
142	SITC of Plate Type Earthing station (Earthing electrode: 600X600 mm2, 3mm thick, tinned Cu earthing plate)	20.0 Nos.
143	SITC of Rod type Earthing station (Earthing electrode: 40 mm dia. MS Solid earthing rod)	40.0 Nos.

Sr. No.	Item Description	Quantity
144	SITC of Cu grounding pad	500.0 Nos.
145	SITC of 15mm dia, 2mtr height Copper Vertical Air Termination	55.0 Nos.
146	Exothermic CAD welding at underground earthing mesh	300.0 Nos.
	SCADA	
147	SCADA system for control of Class IV system, and monitoring of entire electrical equipment	1.0 No
	EMTR	
148	Emergency Transfer Panel (Siesmic qualification of Panel shall be required by analysis)	2.0 Nos
	Hydrogen gas Monitoring System for battery bank rooms	
149	PUPS Battery Bank rooms	24.0 Nos.
150	CUPS Battery Bank rooms	8.0 Nos
151	Class I Battery Bank rooms	4.0 Nos
152	CPS Battery Bank rooms	7.0 Nos
	Lighting System	
153	SITC of LED type High bay fixture with minimum lumen output of 27500	100.0 Nos.
154	SITC of Recess type LED lighting fixture with minimum lumen output of 4500	750.0 Nos.
155	SITC of tube type LED fixture with minimum lumen output of 3200	2000.0 Nos.
156	SITC of circular shaped type LED fixture with minimum lumen output of 3200	500.0 Nos.
157	Flameproof LED type lighting fixture with minimum lumen output of 3200	250.0 Nos.
158	400W sodium vapour lamps of linear type or equivalent LED, 240V, 1 phase, 50Hz for underwater lighting	20.0 Nos.
159	500W halogen incandescent lamps or equivalent LED, 240V, 1 phase, 50Hz for underwater lighting	20.0 Nos.
160	Aviation warning light system for 80 m stack (Led Lights)	1.0 Nos.
161	Design, and engineering, SITC of lighting system shall be in the scope of Contractor, Calculation of lighting fixture in various building of HFRR complex, and outside. Wiring from switch board to lighting fixture shall also be in the scope of EPC Contractor	Lot
	Internal Electrification	
162	SITC of 16 A,3 PIN, Single Phase Industrial Power Point with DP, MCB (10 kA C curve)	500.0 Nos.
163	SITC of 32 A,5 PIN, Three Phase Industrial Power Point with FP, MCB (10 kA C curve)	130.0 Nos.

Sr. No.	Item Description	Quantity
164	SITC of 16A, Switch board with switch and socket, 2 nos. of switch and socket. Rating of switch 16 A, Rating of socket 16 A, 3 PIN	700.0 Nos.
165	SITC of 16 A,3 PIN, Flame proof Single Phase Industrial Power Point with DP, MCB (10 kA C curve)	80.0 Nos.
166	SITC of 32 A,5 PIN, Flame proof Three Phase Industrial Power Point with FP, MCB (10 kA C curve)	40.0 Nos.
167	SITC of 7 segment Power Distribution Board with single phase outlet, Incomer: 415V, 63A, 4 pole, MCB, 10 kA, C curve, Current Rating of DP ELCB: 63A, 2 pole, RCCB, 30 mA sensitivity Total no. of outgoing SP MCB: 30 Nos., Outgoing SP MCB rating: 16A, SP, MCB, 10 kA, C curve	100.0 Nos.
168	SITC of 7 segment Lighting Distribution Board with single phase outlet, Incomer: 415V, 63A, 4 pole, MCB, 10 kA, C curve, Current Rating of DP ELCB: 63A, 2 pole, RCCB, 30 mA sensitivity, Total no. of outgoing SP MCB: 30 Nos., Outgoing SP MCB rating: 6A, SP, MCB, 10 kA, C curve	60.0 Nos.
169	Design, and engineering, SITC of internal electrification shall be in the scope of Contractor, Calculation of number of receptacles, switchboard in various building of HFRR complex as per requirements mentioned in HFRR/51000/C1/A4/A. Wiring from PDB to switchboard shall also be in the scope of EPC Contractor	Lot
	HFRR Administrative building: Internal Electrification and Lighting Fixtures and fans	
170	BLDC fans	443.0 Nos.
171	230 mm dia. PVC exhaust fans with shutters	30.0 Nos.
172	6A one way switch	464.0 Nos.
173	6/16Socket	1241.0 Nos.
174	16A switch with indication light	1041.0 Nos.
175	1 modular weather proof (IP55) switches box & adaptor with PVC membrane containing 1 number of switches. (Equivalent to Legrand IP55 Plexo box with PVC membrane.)	9.0 Nos.
176	6A, 2 way switch	84.0 Nos.
177	1/2/3 module Cover plate with frame	689.0 Nos.
178	6 module Cover plate with frame	34.0 Nos.
179	8 module Cover plate with frame	305.0 Nos.
180	1 /2/3 module GI box with accessories	689.0 Nos.
181	6 module GI box with accessories	34.0 Nos.
182	8 module GI box with accessories	305.0 Nos.
183	2 module SPD of rating 2kA	153.0 Nos.

Sr. No.	Item Description	Quantity
184	Switch box light point wiring	87.0 Nos.
185	Primary lighting point wiring	566.0 Nos.
186	Secondary lighting point wiring	981.0 Nos.
187	Primary power point wiring	306.0 Nos.
188	Secondary power point wiring	242.0 Nos.
189	6/10/16/20 A C type MCB	365.0 Nos.
190	AC power point wiring	196.0 Nos.
191	20 A, AC starter	200.0 Nos.
192	7 segment phase segregated, Double Door Distribution Board -12W	18.0 Nos.
193	7 segment phase segregated, Double Door Distribution Board -8W	5.0 Nos.
194	32A 4P MCB	12.0 Nos.
195	32A 2P RCCB	36.0 Nos.
196	No. of 63A 4P MCB	12.0 Nos.
197	No. of 63A 2P RCCB	36.0 Nos.
198	30 KVA UPS with battery bank	2.0 Nos.
199	25mm MS conduit with 1.6mm thickness and 1/2/3/4W metal junction box, L-bend and other accessories.	22000 m
200	Battery operated emergency light of rating -25W	50.0 Nos.
201	600x600 mm recessed/surface type light fixture -36W	350.0 Nos.
202	Recessed /surface type light fixture -18 W	300.0 Nos.
203	Batten type light fixture- 36W	100.0 Nos.
204	Mirror light fixture -5W	30.0 Nos.
205	Weather proof bulkhead light fixture -10W	200.0 Nos.
206	16 sq. mm. copper flexible single core wire with flame retardant, PVC compound, green colored insulation.	1000 m
207	300 mm exhaust fan with metallic louver	4.0 Nos.
	Canteen, Workshop and Stores building: Earthing & Lightning Protection system, Internal Electrification and Lighting Fixtures and fans	
A	**Internal Electrification and Lighting Fixtures and fans**	
208	BLDC fans	176 Nos.
209	230mm dia. PVC exhaust fans with shutters	20 Nos.
210	1 Module GI switch box and cover plate with frame and accessories containing 1 no. of 6A, 1 way switches	10 Nos.
211	2 Module GI switch box and cover plate with frame and accessories containing 2 nos. of 6A, 1 way switches	10 Nos.
212	3 Module GI switch box and cover plate with frame and accessories containing 3 nos. of 6A , 1 way switches	25 Nos.

Sr. No.	Item Description	Quantity
213	4 Module GI switch box and cover plate with frame and accessories containing 4 nos. of 6A , 1 way switches	25 Nos.
214	6 Module GI switch box and cover plate with frame and accessories containing 6 nos. of 6A , 1 way switches	10 Nos.
215	8 Module GI switch box and cover plate with frame and accessories containing 8 nos. of 6A , 1 way switches	10 Nos.
216	12 Module GI switch box and cover plate with frame and accessories containing 12 nos. of 6A , 1 way switches	20 Nos.
217	6 Module GI switch box and cover plate with frame and accessories containing a)2 nos. of 6/16A sockets b)2nos. of 16A one way switches with indication light	248 Nos.
218	1 modular weather proof (IP55) switches box & adaptor with PVC membrane containing 1 number of switches. (Equivalent to Legrand IP55 Plexo box with PVC membrane.)	9 Nos.
219	2 Module GI switch box and cover plate with frame and accessories containing 2 nos. of 6A , 2 way switches	60 Nos.
220	16A single phase industrial socket	75 Nos.
221	32A three phase industrial socket	15 Nos.
222	Primary lighting point wiring with 2.5 sq. mm wire	100 Nos.
223	Secondary lighting point wiring with 2.5 sq. mm wire	1050 Nos.
224	Primary power point wiring with 2.5 sq. mm wire.	500 Nos.
225	Secondary power point wiring with 2.5 sq. mm wire.	750 Nos.
226	Industrial single phase primary power point wiring with 4 sq. mm wire.	75 Nos.
227	Industrial single phase secondary power point wiring with 4 sq. mm wire.	75 Nos.
228	AC (1.5 ton) power point wiring with 4 sq. mm. wire	71 Nos.
229	20 A, AC starter	71 Nos.
230	7 segment phase segregated, Double Door Distribution Board -30 Way Incomer: 415V, 63A, 4 pole, MCB, 10 kA, C curve, Current Rating of DP ELCB: 63A, 2 pole, RCCB, 30 mA sensitivity, Total no. of outgoing SP MCB: 30 Nos., Outgoing SP MCB rating: 16A, SP, MCB, 10 kA, C curve	30 Nos.
231	25mm MS conduit with 1.6mm thickness and 1/2/3/4W metal junction box, L-bend and other accessories.	As per requirements
232	Battery operated emergency light of rating -25W	50 Nos.
233	600x600 mm recessed/surface type light fixture -30W	220 Nos.

Sr. No.	Item Description	Quantity
234	Recessed /surface type light fixture -16 W	185 Nos.
235	Batten type light fixture- 40W	285 Nos.
236	Batten type light fixture- 20W	50 Nos.
237	Mirror light fixture -5W	30 Nos.
238	Weather proof bulkhead light fixture -10W	100 Nos.
239	120W High Bay Light	50 Nos.
240	70W High Bay Light	40 Nos.
241	16 sq. mm. copper flexible single core wire with flame retardant, PVC compound, green colored insulation.	As per requirements
242	300 mm exhaust fan with metallic louver	50 Nos.
B	**Earthing system**	
243	40 mm dia. Mild steel buried earth conductor	350 mtrs.
244	40 mm dia. , 3m long, MS rod for earth electrode	20 nos.
245	Earth station of Brick masonry chamber of size 300x300x300 mm with hinged CI cover for 40 mm dia. & 3m long MS rod	6 nos.
246	50x6 mm^2 GI flat strip	750 mtrs
C	**Lightning Protection System**	
247	20 mm dia. , 1 m long GS rod for vertical air terminals	25 nos.
248	50x6 mm^2 GS flat strip	1600 mtrs.
249	40 mm dia. , 3m long, MS rod	26 nos.
250	40 mm dia. MS rod for lightning riser	26 nos.
251	Junction box/Test link	26 nos.
	M4-S2: Plant Lifts/ Elevators	
1	13 persons passenger lift in Control Building with 15 m travel height and 800 mm * 2000 mm door openings and having 5 stops and 5 openings (all are on same side)	1.0 Nos.
2	13 persons passenger lift in Admin Building with 15 m travel height and 800 mm * 2000 mm door openings and having 3 stops and 3 openings (all are on same side)	1.0 Nos.
3	13 persons passenger lift in Admin Building with 15 m travel height and 800 mm * 2000 mm door openings and having 3 stops and 3 openings (all are on same side)	1.0 Nos.
4	8 persons passenger lift in Reactor Building with 25 m travel height and 800 mm * 2000 mm door openings and having 4 stops and 4 openings (all are on same side)	1.0 Nos.
5	2 Tons Goods/Fright lift in Reactor Building with 20 m travel height and 1200 mm * 2400 mm door openings and having 3/4 stops and 3/4 openings (all are on same side)	1.0 Nos.

Sr. No.	Item Description	Quantity
6	2 Tons Goods/Fright lift in Service Building with 10 m travel height and 1200 mm * 2400 mm door openings and having 3/4 stops and 3/4 openings (all are on same side)	1.0 Nos.
M5	**Control and Instrumentation Systems Module**	
	M5-S1: BOQ for Process Instrumentation, Main & Supplementary Control Centres, Cabling, Tubing	
I	**Schedule of Orifice Meters with WNRF Orifice Flanges and Accessories (as per ISO 5167) for Water Service**	**Quantity (Sets)**
1	Pipe Size: DN 900, Flange: SA 105, Plate: SS 316, EPDM Gasket	1.0 Nos.
2	Pipe Size: DN 400, Flange: SS 304L, Plate: SS 316, SS Spiral Wound Gasket	2.0 Nos.
3	Pipe Size: DN 350, Flange: SA 105, Plate: SS 316, EPDM Gasket	1.0 Nos.
4	Pipe Size: DN 250, Flange: SA 105, Plate: SS 316, EPDM Gasket	1.0 Nos.
5	Pipe Size: DN 200, Flange: SS 304L, Plate: SS 316, SS Spiral Wound Gasket	3.0 Nos.
6	Pipe Size: DN 200, Flange: SA 105, Plate: SS 316, EPDM Gasket	4.0 Nos.
7	Pipe Size: DN 150, Flange: SA 105, Plate: SS 316, EPDM Gasket	1.0 Nos.
8	Pipe Size: DN 150, Flange: SS 304L, Plate: SS 316,SS Spiral Wound Gasket	2.0 Nos.
9	Pipe Size: DN 100, Flange: SA 105, Plate: SS 316, EPDM Gasket	6.0 Nos.
10	Pipe Size: DN 100, Flange: SS 304L, Plate: SS 316, SS Spiral Wound Gasket	3.0 Nos.
11	Pipe Size: DN 80, Flange: SS 304L, Plate: SS 316, SS Spiral Wound Gasket	2.0 Nos.
12	Pipe Size: DN 50, Flange: SA 105, Plate: SS 316, EPDM Gasket	3.0 Nos.
13	Pipe Size: DN 50, Flange: SS 304L, Plate: SS 316, EPDM Gasket	3.0 Nos.
14	Pipe Size: DN 50, Flange: SS 304L, Plate: SS 316, SS Spiral Wound Gasket	6.0 Nos.
15	Pipe Size: DN 40, Flange: SA 105, Plate: SS 316, EPDM Gasket	2.0 Nos.
16	20% Extra Pairs of Gaskets (rounded to next higher integer) of each size shall be provided	As required
II	**Schedule of Classical Machined Venturi meters with accessories as per ISO 5167, Welded Connection**	
1	Pipe Size: DN 150, Sch 40, MOC: SS 304 L, Water Service	1.0 Nos.
2	Pipe Size: DN 100,Sch 40 MOC: SS 304 L, Water Service	4.0 Nos.
3	Pipe Size: DN 80, Sch 40 MOC: SS 304 L, Water Service	7.0 Nos.
4	Pipe Size: DN 80, Sch 40 MOC: SS 304 L, Dowtherm-A Service	2.0 Nos.
5	Pipe Size: DN 50, Sch 80 MOC: SS 316 L, Water Service	4.0 Nos.

Sr. No.	Item Description	Quantity
6	Pipe Size: DN 40, Sch 40 MOC: SS 316 L, Water Service	1.0 Nos.
7	Pipe Size: DN 40, Sch 40 MOC: SS 316 L, Helium Service	1.0 Nos.
8	Pipe Size: DN 25, Sch 40 MOC: SS 316 L, Helium Service	1.0 Nos.
III	**Schedule of Small Bore orifice meters**	
1	Pipe Size: DN 40, Sch 40, MOC: SS 316L, Design Pressure/ Temperature: 20 bar (g), 150 Deg C, Block Design	1.0 Nos.
2	Pipe Size: DN 25, Sch 40, MOC: SS 316L, Design Pressure/ Temperature: 200 bar (g), 350 Deg C, Block Design	3.0 Nos.
3	Pipe Size: DN 25, Sch 40, MOC: SS 304L, Design Pressure/ Temperature: 11 bar (g), 80 Deg C, Block Design	6.0 Nos.
4	Pipe Size: DN 25, Sch 40, MOC: SS 316L, Design Pressure/ Temperature: 10 bar (g), 60 Deg C, Block Design	1.0 Nos.
5	Pipe Size: DN 25, Sch 40, MOC: SS 304L, Design Pressure/ Temperature: 6 bar (g), 60 Deg C	1.0 Nos.
6	Pipe Size: DN 25, Sch 40, MOC: SS 304L, Design Pressure/ Temperature: 8 bar (g), 80 Deg C	2.0 Nos.
7	Pipe Size: DN 15, Sch 40, MOC: SS 316L, Design Pressure/ Temperature: 200 bar (g), 60 Deg C, Block design	3.0 Nos.
8	Pipe Size: DN 15, Sch 40, MOC: SS 316L, Design Pressure/ Temperature: 200 bar (g), 350 Deg C, Block design	1.0 Nos.
9	Pipe Size: DN 15, Sch 40, MOC: SS 316L, Design Pressure/ Temperature: 10 bar (g), 100 Deg C	1.0 Nos.
10	20% Extra Pairs of Gaskets (rounded to next higher integer) of each size shall be provided	As Required
IV	**Metal Tube Rotameters with Switches (Tube MOC SS 316)**	
1	Pipe Size: DN 50, Design Pressure/ Temperature:3bar (g)/ 80 DegC, Water Service	2.0 Nos.
2	Pipe Size: DN 50, Design Pressure/ Temperature:10bar (g)/60 DegC, Water Service	2.0 Nos.
3	Pipe Size: DN 15, Design Pressure/ Temperature:3bar (g)/ 80 DegC, Water Service	6.0 Nos.
4	Pipe Size: DN 15, Design Pressure/ Temperature:3bar (g)/ 80 DegC, Oxygen Service	1.0 Nos.
5	Pipe Size: DN 15, Design Pressure/ Temperature:3bar (g)/ 80 DegC, Helium Service	1.0 Nos.
6	20% additional quantity (rounded to next higher integer) for each individual type	As required
V	**Schedule of Averaging Pitot Tube (MOC SS)**	
1	Rectangular Duct: 1300 mm x 1300 mm	3.0 Nos.

Sr. No.	Item Description	Quantity
2	Rectangular Duct: 900 mm x 900 mm	5.0 Nos.
3	Rectangular Duct: 400 mm x 400 mm	3.0 Nos.
4	1 Nos. additional quantity for each uniquely sized rotameter shall be provided.	As required
VI	**Schedule of RTD with Thermowell: RTD-3 Wire, Simplex, Pt-100, Class A as per IEC 60751 Mineral Insulated, SS 304 Sheathed, 6mm Sheath OD: Thermowell- Tapered Shank as per ASME 19.3 TW, MOC: SS 316L**	
1	Pipe Size: DN 900, Sch 40, Design Pressure/ Temperature: 8 bar (g)/ 80 Deg C, Threaded Connection	1.0 Nos.
2	Pipe Size: DN 400, Sch 40, Design Pressure/ Temperature: 11 bar (g)/ 80 Deg C, Threaded Connection	18.0 Nos.
3	Pipe Size: DN 400, Sch 40, Design Pressure/ Temperature: 8 bar (g)/ 80 Deg C, Threaded Connection	4.0 Nos.
4	Pipe Size: DN 350, Sch 40, Design Pressure/ Temperature: 11 bar (g)/ 80 Deg C, Threaded Connection	4.0 Nos.
5	Pipe Size: DN 350, Sch 40, Design Pressure/ Temperature: 6 bar (g)/ 60 Deg C, Threaded Connection	2.0 Nos.
6	Pipe Size: DN 250, Sch 40, Design Pressure/ Temperature: 6 bar (g)/ 60 Deg C, Threaded Connection	1.0 Nos.
7	Pipe Size: DN 200, Sch 40, Design Pressure/ Temperature: 8 bar (g)/ 80 Deg C, Threaded Connection with seal weld	4.0 Nos.
8	Pipe Size: DN 200, Sch 40, Design Pressure/ Temperature: 8 bar (g)/ 65 Deg C, Threaded Connection	4.0 Nos.
9	Pipe Size: DN 200, Sch 40, Design Pressure/ Temperature: 6 bar (g)/ 60 Deg C, Threaded Connection	1.0 Nos.
10	Pipe Size: DN 200, Sch 40, Design Pressure/ Temperature: 10 bar (g)/ 60 Deg C, Threaded Connection	4.0 Nos.
11	Pipe Size: DN 150, Sch 40, Design Pressure/ Temperature: 11 bar (g)/ 80 Deg C, Threaded Connection	3.0 Nos.
12	Pipe Size: DN 150, Sch 40, Design Pressure/ Temperature: 8 bar (g)/ 65 Deg C, Threaded Connection	1.0 Nos.
13	Pipe Size: DN 150, Sch 40, Design Pressure/ Temperature: 8 bar (g)/ 80 Deg C, Threaded Connection	5.0 Nos.
14	Pipe Size: DN 150, Sch 40, Design Pressure/ Temperature: 8 bar (g)/ 80 Deg C, Threaded Connection	1.0 Nos.
15	Pipe Size: DN 80, Sch 40, Design Pressure/ Temperature: 8 bar (g)/ 65 Deg C, Threaded Connection	2.0 Nos.
16	Pipe Size: DN 80, Sch 40, Design Pressure/ Temperature: 15 bar (g)/ 200 Deg C, Welded Connection	4.0 Nos.

Sr. No.	Item Description	Quantity
17	Pipe Size: DN 80, Sch 40, Design Pressure/ Temperature: 10 bar (g)/ 60 Deg C, Threaded Connection	2.0 Nos.
18	Pipe Size: DN 50, Sch 80, Design Pressure/ Temperature: 200 bar (g)/ 350 Deg C, Welded Connection	6.0 Nos.
19	Pipe Size: DN 50, Sch 80, Design Pressure/ Temperature: 80 bar (g)/ 100 Deg C, Welded Connection	2.0 Nos.
20	Pipe Size: DN 50, Sch 40, Design Pressure/ Temperature: 10 bar (g)/ 60 Deg C, Threaded Connection	1.0 Nos.
21	Pipe Size: DN 50, Sch 40, Design Pressure/ Temperature: 12 bar (g)/ 50 Deg C, Threaded Connection	2.0 Nos.
22	Pipe Size: DN 40, Sch 40, Design Pressure/ Temperature: 3 bar (g)/ 80 Deg C/180 Deg C, Threaded Connection with seal weld	7.0 Nos.
23	Pipe Size: DN 40, Sch 40, Design Pressure/ Temperature: 20 bar (g)/ 150 Deg C, Threaded Connection	3.0 Nos.
24	Pipe Size: DN 40, Sch 40, Design Pressure/ Temperature: 10 bar (g)/ 60 Deg C, Threaded Connection	4.0 Nos.
25	Pipe Size: DN 25, Sch 40, Design Pressure/ Temperature: 3 bar (g)/ 80Deg C, Threaded Connection with seal weld	3.0 Nos.
26	Pipe Size: DN 25, Sch 40, Design Pressure/ Temperature: 3 bar (g)/ -180 to 80Deg C, Threaded Connection with seal weld	2.0 Nos.
27	Pipe Size: DN 25, Sch 40, Design Pressure/ Temperature: 20 bar (g)/ 150 Deg C, Threaded Connection	1.0 Nos.
28	Pipe Size: DN 25, Sch 80, Design Pressure/ Temperature: 200 bar (g)/ 360 Deg C, Welded Connection	1.0 Nos.
29	Pipe Size: DN 15, Sch 80, Design Pressure/ Temperature: 200 bar (g)/ 350 Deg C, Welded Connection	5.0 Nos.
30	Tank Mounted, Design Pressure/ Temperature: 200 bar (g)/360 Deg C, Welded	2.0 Nos.
31	Tank Mounted, Design Pressure/ Temperature: 15 bar (g)/200 Deg C, Welded.	1.0 Nos.
32	Tank Mounted, Design Pressure/ Temperature: 80 bar (g)/100 Deg C, Welded	2.0 Nos.
33	Tank Mounted, Design Pressure/ Temperature: 20 bar (g)/150 Deg C, Welded.	2.0 Nos.
34	Additional quantity of 20% (rounded up to next higher integer) of each uniquely sized item shall be supplied	As required
VII	**RTDs without Thermowell: RTD-3 Wire, Simplex, Pt-100, Class A as per IEC 60751, Mineral Insulated, SS 304 Sheath, Sheath OD 6mm**	
1	2m Long RTD	8.0 Nos.

Sr. No.	Item Description	Quantity
2	5m Long RTD	2.0 Nos.
3	In Vessel	2.0 Nos.
4	Duct Mounted	2.0 Nos.
5	Wall Mounted	3.0 Nos.
6	Additional quantity of 20% (rounded up to next higher integer) of each uniquely sized RTD shall be supplied.	As required
VIII	**Schedule of Temperature Transmitters (Pt-100 Input, Features: single and differential, analogue for Class IA applications, smart with V&V for IB/IC and Smart for NINS applications, 4-20 mA DC output, 24 VDC Powered, 2 wire, Accuracy +/-0.1 %**	
1	Temperature Transmitters for Class IA applications (seismically qualified, EMC qualified, environmentally qualified)	18 Nos.
2	Temperature Transmitters for Class IB/IC applications (seismically qualified, EMC qualified, environmentally qualified, V&V qualified)	54 Nos.
3	Temperature Transmitters for NINS applications	50 Nos.
IX	**Schedule of Stainless Steel Pressure Gauges and Differential Pressure Gauges (Bourdon Tube, Dial Size 150 mm, Accuracy +/- 1.5% of Span)**	
1	PG: 0-1.6 kg/cm2 (g)	6.0 Nos.
2	PG: 0-4 kg/cm2 (g)	56.0 Nos.
3	PG: 0-10 kg/cm2 (g)	138.0 Nos.
4	PG: -1 to 1.5 kg/cm2 (g)	40.0 Nos.
5	PG: 0 to 250 kg/cm2 (g)	7.0 Nos.
6	DPG with switch: 0-0.4 kg/cm2 (g)	12.0 Nos.
7	Additional Quantity: 20% of the each individual type of Pressure Gauge (rounded up to next higher integer) shall be supplied.	As required
X	**Schedule of Differential Pressure Transmitters for Safety Application (Analogue Transmitter, Accuracy +/-0.25%, Rangeability 6:1, Capacitance Type, 24 VDC 2 wire, 4-20 mA DC output, Seismically qualified, EMC Qualified, Environmentally qualified) with accessories**	
1	Pressure Range -2.5 bar to 2.5 bar	45 Nos.
2	Pressure Range and corresponding quantity -25 bar to 25 bar	45 Nos.
3	Pressure Range and corresponding quantity -250 bar to 250 bar	12 Nos.
4	Additional Quantity: 20% of the each individual range of DP Transmitter (rounded up to next higher integer) shall be supplied	As Required
XI	**Schedule of Differential Pressure Transmitters for IB, IC and NINS Applications (Smart Transmitter with V&V for IB/IC, Accuracy +/-0.075% %, Rangeability 100:1, Capacitance Type,**	

Sr. No.	Item Description	Quantity
	24 VDC 2 wire, 4-20 mA DC output, Seismically qualified, EMC Qualified, Environmentally qualified) with accessories	
1	Pressure Range and corresponding quantity -2.5 bar to 2.5 bar and IB/IC Class	83 Nos.
2	Pressure Range and corresponding quantity -25 bar to 25 bar and IB/IC Class	72 Nos.
3	Pressure Range and corresponding quantity -0.05 bar to 0.05 bar and IB/IC Class	10 Nos.
4	Pressure Range and corresponding quantity -250 bar to 250 bar and IB/IC Class	8 Nos.
5	Pressure Range and corresponding quantity -2.5 bar to 2.5 bar and NINS Class	89 Nos.
6	Pressure Range and corresponding quantity -25 bar to 25 bar and NINS Class	45 Nos.
7	Pressure Range and corresponding quantity -0.05 bar to 0.05 bar and NINS Class	9 Nos.
8	Additional Quantity: 20% of the each individual range of DP Transmitter (rounded up to next higher integer) shall be supplied	As Required
XII	**Schedule of Radar Level Transmitters**	
1	Level range 5 m	3 Nos.
2	Level range 2 m	5 Nos.
3	Level range 14 m	2 Nos.
4	Level range 10 m	2 Nos.
5	20% of the each individual type of Radar Level Transmitter (rounded up to next higher integer) shall be supplied	As required
XIII	**Schedule of Cables and wires (Additional Quantity of 20% of quantity of Cables of each type shall be supplied as additional quantity) FRLS Sheathed, PVC Insulated, Shielded Twisted Pair (Individual and overall shielding for instrumentation cable, overall shielding only for control cable, copper stranded 0.75 sq mm/ 1.0 sq mm/ 1.5 sq mm)**	
1	Instrumentation Signal Cables with 36 pairs	500 m
2	Instrumentation Signal Cables with 18 pairs	5800 m
3	Instrumentation Signal Cables with 10 pairs	6300 m
4	Instrumentation Signal Cables with 2 pairs	3200 m
5	Instrumentation Signal Cables with Triad	1000 m
6	Control Cables with 24 pairs	2000 m
7	Control Cables with 12 pairs	3000 m
8	Control Cables with 2 pairs	1000 m

Sr. No.	Item Description	Quantity
XIV	**Schedule of Fire Survival Cable (LSZH Sheath, Double MICA + XLPE Insulation)**	
1	Fire survival Cables with 24 pairs	500 m
2	Fire survival Cables with 12 pairs	500 m
3	Fire survival Cables with 2 pairs	500 m
XV	**Schedule of Special Cables (FRLS Sheath)**	
1	LAN Cable	1000 m
2	Fibre Optic Cable	1000 m
3	RS-485 Cable	1000 m
4	PTFE Wires for internal panel wiring	As required
XVI	**Schedule of Transmitter Racks (Seismically Qualified)**	
1	Large Transmitter Rack (16 Transmitter Capacity)	37 Nos.
2	Medium Transmitter Rack (8 Transmitter Capacity)	16 Nos.
3	Medium Transmitter Rack (6 Transmitter Capacity)	11 Nos.
XVII	**Schedule of Junction Boxes**	
1	Junction Box with 200 Terminal capacity	15 Nos.
2	Junction Box with 100 Terminal capacity	20 Nos.
3	Junction Box with 50 Terminal capacity	60 Nos.
4	Junction Box with 20 Terminal capacity	30 Nos.
XVIII	**Schedule of Local Panels**	
1	Local Panel with accessories (600 (W) x 2200 (H) x 900 (D)) Accessories: lighting, ventilation, grounding)	40 Nos.
	Schedule of items mounted on Local Panels in field areas	
1	Paperless Recorder (10.5 inch 24 channel)	25 Nos.
2	Alarm Window box with hooter and buzzer	40 Nos.
3	Digital Panel Meter	240 Nos.
4	PID Controller	10 Nos.
5	ON/OFF Controller	40 Nos.
6	Push Buttons	400 Nos.
7	24 channel Process Scanner	40 Nos.
8	24 VDC SMPS 200W (240 V AC input)	40 Nos.
9	Terminal Blocks	As required
10	PTFE Wires for internal wiring	As required
11	Consumables like lugs, sleeves, wire ferrules, glands, ties, wiring duct	As required
12	Miniature Circuit Breakers	80 Nos.
13	Power Supply Points with Switch	80 Nos.

Sr. No.	Item Description	Quantity
14	Isolation Transformer	40 Nos.
15	Line Filter	40 Nos.
XIX	**Schedule of Tubing and Tube Fittings (Seismically Qualified)**	
	Type 1: Standard SS Tubing, Tube fitting and Needle valves	
1	SS 304-L 3/8 inch OD Tube	19000 m
2	SS 3/8 inch OD Tube to 3/8 inch OD Tube compression union fitting	3200 nos.
3	1/2 inch NPT (M) to 3/8 inch OD tube compression straight fitting	1520 nos.
4	1/2 inch NPT (F) to 3/8 inch OD tube compression straight fitting	1000 nos.
5	3/8 inch OD tube to 3/8 inch OD tube to 3/8 inch OD tube compression tee fitting	760 nos.
6	Needle Valve with 3/8 inch OD tube compression fitting	1140 nos.
7	3/8 inch OD tube compression elbow fitting	1500 nos.
	Type 2: Special Quality SS Fittings and Needle valves	
1	SS 3/8 inch OD Tube to 3/8 inch OD Tube compression union fitting	900 Nos.
2	1/2 inch NPT (M) to 3/8 inch OD tube compression straight fitting	900 Nos.
3	1/2 inch NPT (F) to 3/8 inch OD tube compression straight fitting	250 Nos.
4	3/8 inch OD tube to 3/8 inch OD tube to 3/8 inch OD tube compression tee fitting	250 Nos.
5	Needle Valve with 3/8 inch OD tube compression fitting	250 Nos.
6	3/8 inch tube compression elbow fitting	500 Nos.
	Type 3: Copper Tubing and Brass fittings	
1	Copper Tubing 6mm OD	600 m
2	Copper Tubing 12mm OD	600 m
3	Copper Tubing 20 mm OD	1000 m
4	1/2 inch NPT (M) to 6mm OD Tube compression brass fitting	100 nos.
5	6mm OD Tube to 6mm OD Tube to 6 mm OD Tube Brass Compression Tee Fitting	100 nos.
6	Needle Valve with 6 mm OD tube compression Brass fitting	100 nos.
7	1/2 inch NPT (M) to 6mm OD Tube compression brass fitting	100 nos.
8	12mm OD Tube to 12mm OD Tube to 12mm OD Tube Brass Compression Tee Fitting	100 nos.
9	Needle Valve with 12 mm OD tube compression Brass fitting	100 nos.
10	1/2 inch NPT (M) to 20 mm OD Tube compression brass fitting	100 nos.
11	20 mm OD Tube to 20 mm OD Tube to 20 mm OD Tube Brass Compression Tee Fitting	100 nos.
12	Needle Valve with 20 mm OD tube compression Brass fitting	100 nos.
XX	**Schedule of Field OCs**	

Sr. No.	Item Description	Quantity
1	Operator Console Workstation PC	5 Nos.
XXI	**Schedule of Field Reactor Power Indicators**	
1	Field Reactor Power Indicators (LED Dotmatrix indicator)	10 Nos.
XXII	**Schedule of Field Reactor Operational Status Indicators**	
1	Field Reactor Operational Status Indicators (LED Dotmatrix indicator)	10 Nos.
XXIII	**Schedule of Field Area Audio Visual Unit with alarm windows and bell**	
1	Field Area Audio Visual Unit with alarm window and bell (3 window)	10 Nos.
XXIV	**Schedule of Field Emergency Stop Push Button**	
1	Field Emergency Stop Push Button with wall mounting for reactor trip, equipment trip	30 Nos.
XXV	**Schedule of Push button with wall mounting arrangement**	
1	Push Button with 3 NO Contact with wall mounting arrangement	20 Nos.
XXVI	**Schedule of Air Filter Regulator**	
1	Air Filter Regulator with 0-7 kg/cm2 outlet pressure	20 Nos.
2	Air Filter Regulator with 0-4 kg/cm2 outlet pressure	20 Nos.
XXVII	**Schedule of Conductivity Elements with Transmitters**	
1	Conductivity Element (Retractable type or Flow Through Chamber Type) with transmitters	13 Nos.
XXVIII	**Schedule of Float Level Switches**	
1	Float Level Switch with 600 mm Range	6 Nos.
XXIX	**Solenoid Valve**	
1	Solenoid Valve (2/2 way, 15 NB flanged process connection, 24 VDC Coil)	8 Nos.
2	Solenoid Valve (3/2 way, 18 NB process connection, 24 VDC coil)	14 Nos.
XXX	**Schedule of Probe Type Electromagnetic Flow Meter**	
1	Flow 10000 lpm, Pipe Size 400 NB Sch 40	2 Nos.
XXXI	**Submersible Level Transmitter (24 VDC Powered, 2 wire)**	
1	5 m depth tank. 4-20 mA output	3 Nos.
2	1.5 m depth tank. 4-20 mA output	4 Nos.
XXXII	**Schedule of Photoelectric Sensor/ Transmitter**	4 sensor, 4 transmitter
XXXIII	**MCR Control Panel**	
1	Control Room Panels; Panel for Standing operation Sizes as per drawing (Seismically Qualified, CRCA/Aluzinc 3mm thick, painted as per 7 tank process) with accessories: lighting, ventilation, grounding. (i) 2500 (h) x 3000 (w) x 900 (d)	(i) 4 Nos. (ii) 1 Nos.

Sr. No.	Item Description	Quantity
	(ii) 2500 (h) x 8000 (w) x 900 (d))	
2	Large Screen Display; 65 inch Large Screen Display	2 Nos.
3	VDU Screen; Monitor27 in. Video Display Screen	8 Nos.
4	Operator Console; Workstation PC, 2 x Intel Xeon 6th Gen, 32 Cores, 2.5 GHz 128MB Cache, 256GB DDR4-2667 MHz Expansion support up-to 512 GB	10 Nos.
5	Keyboard and Mouse with drawer; WIRED KEYBOARD AND MOUSE	8 Nos.
6	Push Button with Illumination; Push button with illumination, 22 mm dia, illuminative, 3 NO/NC (Red/Green/Amber)	350 Nos.
7	Push Button without illumination; 3 pole push button with illumination, 22 mm dia, non illuminative, 3 NO/NC	30 Nos.
8	Analog Dial Meter; Analog Dial Meter96 mm x 96 mm	15 Nos.
9	Paperless recorder; Paperless Recorder12 inch, 48 channel	8 Nos.
10	Circular LED Panel Indicator ; LED indicator18 mm dia RED/ Green	40 Nos.
11	Circular LED Panel indicator ; LED indicator 9.5 mm dia RED/ Green	37 Nos.
12	2 position Selector Switch; 2 position rotary selector switch with 3 changeover contacts 36 mm x 36 mm, 5 A, 24 VDC	30 Nos.
13	Alarm Window Modules; 8 columns x 3 rows	26 Nos.
14	Reactor Power Indicator; Single Line Display made up of Red LEDs for indicating reactor power in MW	1 Nos.
15	MIMIC Symbols	As required
16	Terminal Blocks	As required
17	PTFE Wires for internal wiring	As required
18	Consumables like lugs, sleeves, wire ferrules, glands, ties, wiring duct	As required
19	Power Supply Socket with Switch; For connecting temporary devices	12 Nos.
20	Toggle Switches; For Jumper Panel	30 Nos.
21	Panel Indication with dual colour LED; For symbols indicating passive devices such as check valves, passive dampers, NCV etc.	55 Nos.
22	Edgewise Analog Indicator; 4-20 mA DC indicator (96 mm x 24 mm)	12 Nos.
XXXIV	**MCR Control Console**	
1	Control Console: Console for Seated operation (Seismically qualified, CRCA/ Aluzinc 3mm thick, painted as per 7 tank process) (5 sections joined together: overall dimensions 5.6m (w)x 1 m (h), 0.75 m (d) + desk section) with accessories: lighting, ventilation, grounding	1 Nos.
2	VDU Screen; Monitor 21.5 in. Video Display Screen	3 Nos.

Sr. No.	Item Description	Quantity
3	Operator Console; Workstation PC, 2 x Intel Xeon 6th Gen, 32 Cores, 2.5 GHz 128MB Cache, 256GB DDR4-2667 MHz Expansion support up-to 512 GB	3 Nos.
4	Keyboard and Mouse ; WIRED KEYBOARD AND MOUSE	3 Nos.
5	Table Top Mic; TABLE TOP MIC	2 Nos.
6	Toggle Switch; Two position selector toggle switch with 3 changeover contacts, 5A, 24 VDC	15 Nos.
7	Key Switch; 2 Position (Off – ON), 3 Contacts With Illumination (RED), 5A, 24 VDC	2 Nos.
8	Push Button with Illumination; 3 pole push button with illumination, 24 mm x 18 mm, illuminative, 3 NO/NC (Red/Green Amber)	42 Nos.
9	Push Button without illumination; 3 pole push button with illumination, 24 mm x 18 mm, non illuminative, 3 NO/NC	7 Nos.
10	Analog Dial Meter; Analog Dial Meter48mm x 48 mm	8 Nos.
11	Analog Dial Meter; Analog Dial Meter96 mm x 96 mm	14 Nos.
12	Paperless recorder; Paperless Recorder144 mmx 144 mm	1 Nos.
13	Bar Graph Indicator; Bar Graph Indicator, 100 segment 144 mm (h) x 48 mm (w)	10 Nos.
14	Circular Led Indicator ; Single LED indicator, 9.5 mm dia	19 Nos.
15	Twin Led indicator; One led green and One led red in one mosaic tile 24mm x 24 mm	7 Nos.
16	Rectangular LED indicator ; Panel Indicator, 24 mm (w) x 18mm (h) (Red/ Green/ Amber)	37 Nos.
17	2 position Selector Switch; 2 position rotary selector switch with 3 changeover contacts, 36 mm x 36 mm, 5 A, 24 VDC	4 Nos.
18	7 position rotary selector switch; 7 position rotary selector switch, 48 mm x 48 mm, 5 A, 24 VDC	1 Nos.
19	3 position Selector Switch; 3position rotary selector switch with 3 changeover contacts, 36 mm x 36 mm, 5 A, 24 VDC	2 Nos.
20	Emergency Stop Push Button; Mushroom head lock stop button, 48 mm x 48 mm	2 Nos.
21	Potentiometer assembly; 3x 10kohm high accuracy, high linearity potentiometer with cursor knob and dial with illumination, 120 mm x 120 mm	1 Nos.
22	Potentiometer assembly; 3x 10kohm high accuracy, high linearity potentiometer with cursor knob and dial with illumination, 72 mm x 72 mm	1 Nos.
23	Terminal Blocks;	As required
24	PTFE Wires for internal wiring;	As required

Sr. No.	Item Description	Quantity
25	Consumables like lugs, sleeves, wire ferrules, glands, ties, wiring duct;	As required
26	Power Supply Socket with Switch; For connecting temporary devices	4 Nos.
XXXV	**Utilization Control Room Panels**	
1	Utilization Control Room Panel (Seismically Qualified, CRCA, Aluzinc, 3mm thick, painted as per 7 tank process) (Control Desk Panel: overall dimensions 2m (w)x 1.3 m (h), 0.50 m (d)) with accessories: lighting, ventilation, grounding	3 Nos.
2	Paperless Recorder	2 Nos.
3	Video Display Unit	2 Nos.
4	Alarm Window Boxes (8 columns, 3 rows)	1 Nos.
5	Keyboard and Mouse Sets in Drawer	1 set
6	Operator Console Workstation PC	1 Nos.
7	Push Button with Illumination for Equipment Start (Green)	22 Nos.
8	Push Button with Illumination for Equipment Start (Red)	22 Nos.
9	Analog Meters (96mm x 96mm)	5 Nos.
10	1 No. Emergency Trip Button (Mushroom PB with lock stop)	1 Nos.
11	Trapped Key Interlock block (block of 10 keys)	1 Nos.
12	Key Switch	1 Nos.
13	PID Controller	5 Nos.
14	Digital Panel Meters (96mm x 96mm)	5 Nos.
15	Terminal Blocks	As required
16	PTFE Wires for internal wiring	As required
17	Consumables like lugs, sleeves, wire ferrules, glands, ties, wiring duct	As required
18	Power Supply Socket with Switch for AER IRs	2 Nos.
XXXVI	**Wall Mounted Items**	
1	Trapped Key Interlock Exchange Blocks: 10 keys in each block	10 Nos.
XXXVII	**Instrumentation Rack Area**	
1	EMC Proof, Seismically Qualified Instrumentation Racks with accessories Overall dimensions 800 mm (w) x 2000 mm (h)x 1000 mm (d), CRCA, Aluzinc, 3mm thick, painted as per 7 tank process with accessories: lighting, ventilation, grounding	54 Nos.
2	Standard Instrumentation Racks with accessories Overall	18 Nos.

Sr. No.	Item Description	Quantity
	dimensions 800 mm (w) x 2000 mm (h)x 1000 mm (d), CRCA, Aluzinc, 3mm thick, painted as per 7 tank process	
3	Key Switches	10 Nos.
4	Instantaneous Relays	1900 Nos.
5	Time Delay Relays	70 Nos.
6	ATUs	500 Nos.
7	SDIs	550 Nos.
8	Operator Console with Keyboard and Mouse	4 Nos.
9	Video Display Unit	4 Nos.
10	24 VDC, 500 W, Din Rail Mounted SMPS with Power Supply Status Indication from Reputed Manufacturer	4 Nos.
11	Data Server	3 Nos.
12	Ethernet Switches 24 Port with power supply adaptor	10 Nos.
13	Isolation Transformer	20 Nos.
14	Line Filter	20 Nos.
15	AC Miniature Circuit Breakers	100 Nos.
16	AC Molded Case Circuit Breakers	6 Nos.
17	DC Molded Case Circuit Breakers	8 Nos.
18	24 VDC Miniature Circuit Breakers	72 Nos.
19	110 VDC Miniature Circuit Breakers	2 Nos.
20	Terminal Blocks	As required
21	PTFE Wires for internal wiring	As required
22	Consumables like lugs, sleeves, wire ferrules, glands, ties, wiring duct	As required
23	Power Supply Socket with Switch for AER IRs	36 Nos.
XXXVIII	**Free Issue Materials in Instrumentation Rack Area**	
1	RPS AT/CT (PLC Based CBS)	3 Systems
2	RPS XT (Relay Based)	3 Systems
3	RRS (PLC Based CBS + Relay Based)	2 Systems
4	AAS (PLC Based CBS)	2 Systems
5	COIS (PLC Based CBS)	2 Systems
6	Central Clock System	1 System
XXXIX	**SCR Control Console**	
1	Control Console for Seated operation (Seismically qualified, CRCA/ Aluzinc 3mm thick, painted as per 7 tank process) (3 sections joined together: overall dimensions 4m (w)x 1 m (h), 0.75 m (d) + desk	1 Nos.

Sr. No.	Item Description	Quantity
	section) with accessories: lighting, ventilation, grounding	
2	VDU Screen; Monitor 21.5 in. Video Display Screen	1 Nos.
3	Operator Console; Workstation PC, 2 x Intel Xeon 6th Gen, 32 Cores, 2.5 GHz 128MB Cache, 256GB DDR4-2667 MHz Expansion support up-to 512 GB	1 Nos.
4	Keyboard and Mouse: WIRED KEYBOARD AND MOUSE	1 Nos.
5	Table Top Mic: TABLE TOP MIC	2 Nos.
6	Push Button with Illumination: 3 pole push button with illumination, 24 mm x 18 mm, illuminative, 3 NO/NC (Red/Green Amber)	80 Nos.
7	Analog Dial Meter; Analog Dial Meter 96 mm x 96 mm	6 Nos.
8	Paperless recorder; Paperless Recorder 300 mmx 300 mm, 48 channel	1 Nos.
9	Rectangular LED indicator (Panel Indicator24 mm (w) x 18mm (h) (Red/ Green/ Amber))	105 Nos.
10	Power Supply Socket with Switch; For connecting temporary devices	6 Nos.
11	2 position Selector Switch; 2 position rotary selector switch with 3 changeover contacts, 36 mm x 36 mm, 5 A, 24 VDC	1 Nos.
12	Emergency Stop Push Button; Mushroom head lock stop button, 48 mm x 48 mm	3 Nos.
13	Standalone Alarm Annunciation Window Box with hooter and buzzer; 3 rows x 8 columns	2 Nos.
14	Digital Panel Meter; 24 mm x 96 mm	3 Nos.
XL	**SCR Control Panel**	
1	Control Room Panels with accessories; Racks for indication and storage (600 (W) x 2200 (H) x 900 (D)) Accessories: lighting, ventilation, grounding	3 Nos.
2	Digital Panel Meter; 48 mm x 96 mm	24 Nos.
3	24 VDC SMPS 500 W power supply; DIN rail Mounted with power supply status indication	3 Nos.
4	Terminal Blocks;	As required
5	PTFE Wires for internal wiring;	As required
6	Consumables like lugs, sleeves, wire ferrules, glands, ties, wiring duct;	As required
7	Power Supply Socket with Switch; For connecting temporary devices	6 Nos.
XLI	**SCC Channel Rooms**	
1	EMC Proof, Seismically Qualified Instrumentation Racks with accessories Overall dimensions 800 mm (w) x 2000 mm (h)x 1000	18 Nos.

Sr. No.	Item Description	Quantity
	mm (d), CRCA, Aluzinc, 3mm thick, painted as per 7 tank process with accessories: lighting, ventilation, grounding	
2	Instantaneous Relays	200 Nos.
3	Time Delay Relays	10 Nos.
4	ATUs	20 Nos.
5	SDIs	20 Nos.
6	Isolation Transformer	20 Nos.
7	Line Filter	20 Nos.
8	AC Miniature Circuit Breakers	20 Nos.
9	24 VDC Miniature Circuit Breakers	20 Nos.
10	110 VDC Miniature Circuit Breakers	2 Nos.
11	Terminal Blocks	As required
12	PTFE Wires for internal wiring	As required
13	Consumables like lugs, sleeves, wire ferrules, glands, ties, wiring duct	As required
14	Power Supply Socket with Switch	18 Nos.
XLII	**Free Issue Materials in Instrumentation Rack Area**	
1	RPS ET (Relay Based)	3 Systems
2	Slave Clock	1 Unit
	M5-S2: BOQ for Nuclear Instrumentation	
I	**Items in the scope of supply of the Contractor**	
1	JBs (20 terminal)	8 nos.
2	I&C Control cables FRLS Sheathed, PVC Insulated, Shielded twisted Pair (Single Pair)	1000 m
3	I&C Control cables FRLS Sheathed, PVC Insulated, Shielded twisted Pair (20 Pair)	400 m
4	I&C 4-20 mA Cables FRLS Sheathed, PVC Insulated, Shielded twisted Pair (Single Pair)	1000 m
5	I&C 4-20 mA Cables FRLS Sheathed, PVC Insulated, Shielded twisted Pair (20 Pair)	400 m
6	Cable Trays (As per overall I&C system design. Shall be laid in safety class cable trays)	As Required
7	Glands	As Required
8	Fire breaks/ Fire Barriers	As Required
9	Solid GI Conduits for HV & Signal Cables 1 inch ID	700 m
10	Flexible GI Conduits for HV & Signal Cables (Top of Pool)	As Required
II	**FIM items to be installed by the Contractor**	
1	Start-up Detectors (FC)	3 Nos.

Sr. No.	Item Description	Quantity
2	Uncompensated Ion Chambers (UIC)	10 Nos.
3	Compensated Ion Chambers (CIC)	1 Nos.
4	Start Up (Pulse) Channel	3 Nos.
5	Log- Lin (DC) Channel	10 Nos.
6	MRDC Channel	1 Nos.
7	Dual redundant Linear regulated power supply modules.	6 Nos.
8	Co-axial Cable	3000 m
9	Tri Axial / Super Screened Cable	600 m
10	HN type co axial connector pairs	80 (Male-Female Connectors)
	M5-S3: BOQ for Physical Protection Systems	
1	Outdoor Fixed IP bullet camera with Integrated IR with pole mount	28 Nos.
2	Outdoor, High speed PTZ Dome IP camera with accessories wall mount / pole mount for general area surveillance	5 Nos.
3	Indoor IP Dome Camera	40 Nos.
4	Video Management cum recording Software base license with 100 Channel / Camera licenses and 10 Client / user license	1 Nos.
5	CCTV Video Management Server with keyboard, mouse suitable for VMS application	2 Nos.
6	CCTV Video Recording Server for 90 days recording keyboard, mouse suitable for NVMS application	2 Nos.
7	8 Port KVM switch with foldable monitor and Keyboard with mouse	2 Nos.
8	Work station with 32GB Graphics Card with LED monitor at CAS	5 Nos.
9	Industrial Grade (layer 2) managed PoE + Switch - 4 no's 10 / 100 Mbps POE+ copper port and 2 no's 100 / 1000 Mbps SFP port with power supply adaptor with SFPs	15 Nos.
10	Intelligent Gigabyte Layer 3 switch with 24 x 100/1000 SFP, 4 no's SFP+ ports with Power Supply Unit with SFPs	2 Nos.
11	FO Cable (back bone use) 6 Core SM, 9/125 micron; Armoured for backbone	As Required
12	CAT 6 armoured outdoor cable	500 m
13	CAT 6 UTP cable Indoor Use	500 m
14	5 Mtrs camera GI pole with necessary foundation bolts and other mounting accessories	20.0 Nos.
15	Weather-proof junction box (IP 65 rating) suitable for accommodating terminals / Surge protectors etc	As Required
16	9U outdoor enclosure with 1 Mtr stand to accommodate Ethernet	As Required

Sr. No.	Item Description	Quantity
	switches, PDB, MCB, LIU and power adaptor	
17	Instrument Rack of Size 42 U Height x 19 inch x 1000 mm depth standard	2 Nos.
18	10 KVA UPS with 30 minutes battery backup	2 Nos.
19	Armoured Power cable for outdoor use	As Required
20	RFID Card + PIN Readers with EM Lock and Exit Switch	35 Nos.
21	RFID Card + PIN + Biometric Readers with EM Lock and Exit Switch	4 Nos.
22	Biometric Enrolment System with 02 Biometric-RF Reader and Workstation	1 Nos.
23	Access Control Server and Software	2 Nos.
24	Access Control client and Software	2 Nos.
25	Dual Lane Full Height SS 304 Turnstile Gate	4 Nos.
26	Single Lane Full Height SS 304 Turnstile Gate	1 Nos.
27	Flap Barrier	2 Nos.
28	Door Frame Metal Detector	4 Nos.
29	Key Management Cabinets 48 Keys Web Server based for Admin building including Management Software	1 Nos.
30	Video wall with controller and display Monitor and accessories for CAS	1 Nos.
31	Operator Console at CAS /PPS Room for Monitors and Work Station	1 Nos.
32	Work Station and Monitors	1 Nos.
33	Guard Tour Monitoring System (GTMS) Tags with weather-proof wall mounting accessories	20 Nos.
34	GTMS Hand Held Device	4 Nos.
35	GTMS Server with management software	1 Nos.
36	NVR based CCTV system with 15 cameras at admin building	1 Nos.
37	IP Based Distress Alarm System Node with related audio-visual accessories	5 Nos.
38	Contact Condition Monitoring System for 25 emergency exit doors	1 Nos.
39	Light Interfacing Unit (LIU)	10 Nos.
40	Accessories – HDPE Conduits, Aluminium Casing Capping, Cat 6 & FO Patch Cords, TBs, MCBS, Cable Managers, Cable Glands, Ferrules, Connectors etc.	As Required
	M5-S4: BOQ for Radiation Monitoring, Beetle Monitoring, Plant Surveillance and Monitoring System	
I	**Radiation Monitoring System**	
1	JBs (50 Terminal)	10 Nos
2	I&C Control cables (Single Pair)	6000 m

Sr. No.	Item Description	Quantity
3	I&C Control cables (20 Pair)	600 m
4	I&C 4-20 mA Cables (Single Pair)	6000 m
5	I&C 4-20 mA Cables (20 Pair)	600 m
6	230V AC Power supply arrangement for Area Monitors from Class II supply	125 Nos.
7	Cable Trays	As Required
8	Glands	As Required
9	Fire breaks/ Fire Barriers	As Required
10	SS 304 L/ SS 316 L Annular vessel for Radiation Detector Installation	12 Nos.
11	Pipe Well for Radiation Detector Installation	10 Nos.
II	**FIM Radiation Instrumentation for installation and commissioning only**	
1	Bulk Coolant Gamma Detector	6 Nos.
2	Bulk Coolant Gamma Radiation Channel	6 Nos.
3	Bulk Coolant Delayed Neutron Detector	6 Nos.
4	Bulk Coolant Delayed Neutron Radiation Channel	6 Nos.
5	SCW Gamma Detector	4 Nos.
6	SCW Gamma Radiation Channel	4 Nos.
7	DHRS Gamma Detector	6 Nos.
8	DHRS Gamma Radiation Channel	6 Nos.
9	HWL Gamma Detector	2 Nos.
10	HWL Gamma Radiation Channel	2 Nos.
11	Stack Exhaust Air Gamma Detector	6 Nos.
12	Stack Exhaust Air Gamma Radiation Channel	6 Nos.
13	Stack Exhaust Activity Continuous Sampling Monitors (A single train of Particulate, tritium, iodine & FPNG)	2 set
14	FTL Coolant Gamma Detector	1 Nos.
15	FTL Coolant Gamma Radiation Channel	1 Nos.
16	FTL Coolant Bulk DN Detector	3 Nos.
17	FTL Coolant Bulk DN Radiation Channel	3 Nos.
18	N16 based thermal power Monitoring GIC	4 Nos.
19	N16 based thermal power Monitoring GIC Radiation Channel	4 Nos.
20	Standalone High Gamma Monitoring GIC (to be installed in side hot cells)and their radiation monitors (to be installed in field outside hot cells	4 Nos.
21	Area Gamma Monitors	100 Nos.

Sr. No.	Item Description	Quantity
22	Area Neutron Monitors	12 Nos.
23	Area Particulate Monitors	7 Nos.
24	Area Tritium Monitors	5 Nos.
25	Detector Cable	5500 m
II	**Beetle Monitoring System**	
1	CPDUs	2 Nos.
2	BMS HMI	2 Nos.
3	FMUs	8 Nos.
4	Beetle Probes	200 Nos.
5	Beetle field Cables (2 core twisted, FRLS, unshielded)	2000 m
6	RS-485 cable	500 m
7	Ethernet Cable	100 m
III	**Plant Surveillance and Monitoring System**	
1	IP Dome (Mini) Camera	6 Nos.
2	IP Bullet camera	40 Nos.
3	IP PTZ Dome Camera	16 Nos.
4	256 GB Micro SD card	40 Nos.
5	16 CHANNEL– Single port Network Video Recorder	6 Nos.
6	10 TB Surveillance Grade HDD	20 Nos.
7	24 Port PoE Network Switch (Local Panel in Field Area)	10 Nos.
8	24 port Network switch with SFP port (inside AER Rack)	2 Nos.
9	8 Port KVM switch (AER)	2 Nos.
10	PSMS - CCTV Client Workstations (AER Rack + MCR Panel)	2 Nos.
11	24/27” CCTV Display (Similar to other panel Displays)	2 Nos.
12	Cat-6 Cable	As required
13	6U Rack / inside local area panel	4 Nos.
14	U-PVC conduit	As required
15	Casing Capping	As required
16	Cat-6 patch cord	100 Nos.
17	Power cable	As required
18	Patch equipments for Cat 6 UTP 24 Port-Fully Loaded	5 Nos.
	M5-S5: BOQ for Reactivity Control Mechanisms	
1	JBs (50 Terminal)	4 Nos.
2	I&C Control cables FRLS Sheathed, PVC Insulated, Shielded twisted Pair (3 Pair)	3150 m
3	I&C Control cables FRLS Sheathed, PVC Insulated, Shielded twisted Pair (4 Pair)	800 m

Sr. No.	Item Description	Quantity
4	I&C Control cables FRLS Sheathed, PVC Insulated, Shielded twisted Pair (10 Pair)	3300 m
5	I&C Control cables FRLS Sheathed, PVC Insulated, Shielded twisted Pair (3 Core)	400 m
6	I&C Control cables FRLS Sheathed, PVC Insulated, Shielded twisted Pair (20 Pair)	500 m
7	I&C Control cables FRLS Sheathed, PVC Insulated, Shielded twisted Pair (Single Pair)	2000 m
8	I&C 4-20 mA Cables FRLS Sheathed, PVC Insulated, Shielded twisted Pair (Single Pair)	500 m
9	I&C 4-20 mA Cables FRLS Sheathed, PVC Insulated, Shielded twisted Pair (20 Pair)	500 m
10	Cable Trays	As Required
11	Glands	As Required
12	Fire breaks/ Fire Barriers	As Required
13	Three Phase Power Supply Panel for SCRs in PUPS Room Having Two 415 to 220 V three phase Transformers, Four Powering Contactors, Two Power Supply Monitoring Contactors & Two Phase Sequence Detectors	As Required
14	Sealed Relays with Free-Wheeling Diode	180 Nos.
15	Time Delay Relay (Drop off type)	2 Nos.
16	R to I Converters (0 to 10k ohm to Dual Output 4- 20 mA)	36 Nos.
17	Isolators (4-20 mA to 4-20 mA)	10 Nos.
18	Shunts (0-1 A to 0-100 mV)	6 Nos.
19	Shunt Voltage Isolators (0-100 mV to isolated Dual Output 4-20 mA)	6 Nos.
	M5-S6: BOQ for Fire Alarm Systems, Public address and Emergency Siren	
I	**Fire Alarm Systems**	
1	Addressable FAS Control Panels	5 Nos.
2	Master Fire alarm Panel	1 Nos.
3	Addressable Repeater Panel	1 Nos.
4	Addressable Multi-Criteria Detectors	900 Nos.
5	Conventional Multi-Criteria Detectors	50 Nos.
6	Addressable Hooter with Flasher	230 Nos.
7	Addressable Manual Call Point	140 Nos.
8	Beam detector	7 Nos.
9	Addressable Duct Mounted Detectors	15 Nos.
10	Addressable Zone Monitoring Unit for Conventional Detectors	40 Nos.

Sr. No.	Item Description	Quantity
11	Loop Powered Relay Modules	15 Nos.
12	Flame Detectors	7 Nos.
13	GI Mounting Box	As Required
14	Response Indicator	As Required
15	PC GUI/OIC for FAS (Configuration Software, Software for PC To Panel Down/Uploading and Graphics Software Etc. With Licenses)	2 Nos.
16	Aspiration system	As Required
17	Smoke Detector Removal Tool Kit With 7-8 M Collapsible / Concentric Rod	1 No.
18	Smoke Detector Testing Tool Kit	1 Set
19	Aerosol Gas Cans	As required for testing
20	Beam Detector Tester	1 Set
21	Heat Detector Tester	1 Set
22	1 pair 1.5 sq.mm twisted shielded EPR insulated LHLS Copper cond cable	As required
23	3/4 core EPR insulated LHLS Copper cond power cable	As required
24	Field LAN Rack including Access switch, LIU, jack panel, FO cable, PDU, CAT 6 patch cords etc	As required
25	GI conduit	As required
26	HDPE pipe for outdoor installation of cable	As required
27	Flammable Gas detector	As required
28	Electronics cabinet racks	2 Nos.
II	**Public Address and Emergency Siren**	
1	General PAS Controller Rack in a cabinet complete PAS controller (2set), amplifiers, Telephone coupler and MP3 player and power supply unit etc	1 set
2	Emergency PAS Controller Rack in a cabinet complete PAS controller (2set), amplifiers, Telephone coupler and power supply unit etc	1 set
3	Control Desks	4 Nos.
4	Horn type outdoor loudspeakers	15 Nos.
5	Wall mounted Box type loudspeakers	450 Nos.
6	Cone type false ceiling loud speaker	150 Nos.
7	Wall mounted Field Call station- type-A	20 Nos.
8	Desk Mounted Field call station - type-B	5 Nos.
9	GI Junction boxes	As required
10	1 pair 1.5 sq.mm shielded twisted EPR insulated copper LHLS cable	As required

Sr. No.	Item Description	Quantity
11	GI Conduit/GI tray	As required
12	Power cable, Cat 6 cables, termination of all type of cables, earthing etc.	As required
	M5-S7: BOQ for Plant Communication System	
1	Plant Communication System comprising of data internet and telephone system for whole plant.	As per detail engg.
M6	**Auxiliary Systems Module**	
	M6-S1: BOQ for RB Air Conditioning and Ventilation System	
1	Supply AHU: Draw through type. Honeycomb type air washer pad. Cooling & Heating Coils. One main supply fans (described below in Sr. No. 2). Coarse Air filter, Fresh Air filter, Honeycomb type air-washer pad. Two air-washer pumps. Drift Eliminator after air-washer section. 296 TR capacity cooling coil, Multi-row deep. 116 kW heating coil, differential pressure & temperature sensors, performance testing of - fans (AMCA 210), airwasher, cooling coils (AHRI 410), heating coils etc. and complete unit as per AHRI 440.	2.0 Nos.
2	Main Supply Fans: Centrifugal DIDW fans Drive motor, 3 phase induction motor. Flow during operation under Class IV: 50000 m3/hr. Static Pressure during operation under Class IV power supply: 150 mm WG. Fan Motor Operating Voltage & Frequency: 415V, 50Hz, VFD driven Fan Motor synchronous speed (RPM) during operation under Class IV/Class III: 1500/750. Fan Motor Rating: 45 kW, performance tested as per AMCA-210.	2.0 Nos.
3	Main Exhaust Fans: Centrifugal DIDW fans Drive motor: 3 phase induction motor. Flow during operation under Class IV power supply: 50000 m3/hr. Static Pressure during operation under Class IV power supply: 180 mm WG. Fan Motor Operating Voltage & Frequency: 415V, 50Hz, VFD driven Fan Motor synchronous speed (RPM) during operation under Class IV/Class III: 1500/750. Fan Motor Rating: 55 kW, performance tested as per AMCA-210.	2.0 Nos.
4	Basement Booster Fans: Centrifugal SISW fans Drive motor: 3 phase induction motor. Flow during operation under Class IV power supply: 25000 m3/hr. Static Pressure during operation under Class IV power supply: 50 mm WG. Fan Motor Operating Voltage & Frequency: 415V, 50Hz. VFD driven, Fan Motor synchronous speed (RPM) during operation under Class IV/Class III: 1500/750. Fan Motor Rating: 7.5 kW, performance tested as per AMCA-210.	2.0 Nos.
5	Sub-Basement Booster Fans: Centrifugal SISW fans Drive motor: 3 phase induction motor. Flow during operation under Class IV power supply: 25000 m3/hr. Static Pressure during operation under Class IV power supply: 50 mm WG. Fan Motor Operating Voltage &	2.0 Nos.

Sr. No.	Item Description	Quantity
	Frequency: 415V, 50Hz. VFD driven, Fan Motor synchronous speed (RPM) during operation under Class IV/Class III: 1500/750. Fan Motor Rating: 7.5 kW, performance tested as per AMCA-210.	
6	Emergency Exhaust Fan: Centrifugal SISW fans. Drive motor: 3 phase induction motor. Flow: 7200 m3/hr. Static Pressure: 100 mm WG. Fan Motor Operating Voltage & Frequency: 415V, 50Hz. Fan Motor synchronous speed (RPM): 1500. Fan Motor Rating: 11 kW, performance tested as per AMCA-210.	2.0 Nos.
7	Smoke Extraction Fan: Centrifugal SISW fans. Drive motor: 3 phase induction motor. Flow: 7200 m3/hr. Static Pressure: 100 mm WG. Fan Motor Operating Voltage & Frequency: 415V, 50Hz. Fan Motor synchronous speed (RPM): 1500. Fan Motor Rating: 11 kW, performance tested as per AMCA-210.	2.0 Nos.
8	HEPA Filters: Cartridge type, Filter medium: Glass fibre: 2 ft. x 2 ft. each 1700 m3/hr capacity	30.0 Nos.
9	Combined HEPA + Activated Charcoal Filters: 1700 m3/hr capacity	4.0 Nos.
10	Fan Coil Units: Chilled water coil type: 2 TR capacity, Two per PCW Pump Room, performance tested as per AHRI 440	4.0 Nos.
11	Dampers DA-1 & DA-2 with position: Open and Motorised type Damper and at Suction of Main Supply Fans Damper location and size 1300 mm	2.0 Nos.
12	Dampers DA-3 & DA-4 with position: Open and Passive Backdraft Damper type and at Discharge of Main Supply Fans Damper location and size 1300 mm x 1300 mm	2.0 Nos.
13	Dampers with position: Open and Motorised type Damper and at Discharge of Main Supply Fans Damper location and size 1300 mm x 1300 mm	2.0 Nos.
14	Dampers DA-5 & DA-6 with position: Open and Pneumatic Butterfly Damper type and at Containment Isolation Damper Service Building Side & Reactor Building side Damper location and size 1300 mm, pneumatic actuator, solenoid valves, air receiver	2.0 Nos.
15	Dampers DA-7 & DA-8 with position: Open and Motorised Multi blade Control Damper type and at Suction of Basement Booster Fans Damper location and size 900 mm x 900 mm	2.0 Nos.
16	Dampers DA-9 & DA-10 with position: Open and Passive Backdraft Damper type and at Discharge of Basement Booster Fans Damper location and size 900 mm x 900 mm	2.0 Nos.
17	Dampers DA-11 & DA-12 with position: Open and Manual Multi blade Control Damper type and at Suction of Sub-Basement Booster Fans Damper location and size 900 mm	2.0 Nos.
18	Dampers DA-13 & DA-14 with position: Open and Passive Backdraft	2.0 Nos.

Sr. No.	Item Description	Quantity
	Damper type and at Discharge of Sub-Basement Booster Fans Damper location and size 900 mm x 900 mm	
19	Dampers DA-15 with position: Open and Manual Multi blade Control Damper type and at Suction of Emergency Supply Fan Damper location and size 500 mm x 500 mm	1.0 Nos.
20	Damper DA-16 with position: Open and Passive Backdraft Damper type and at Discharge of Emergency Supply Fan Damper location and size 900 mm x 900 mm	1.0 Nos.
21	Dampers DA-17, DA-18 with position: Open and Manual Multi blade Control Damper type and at Reactor Hall Damper location and size 1200 mm x 1200 mm	2.0 Nos.
22	Damper DA-19 with position: Open and Manual Butterfly Damper type and at Lower Hot Cell Exhaust Damper location and size Dia. 200 mm NB	1.0 Nos
23	Dampers DA-20 with position: Open and Manual Butterfly Damper type and at Fuel Clamp Room Exhaust Line Damper location and size Dia. 200 mm NB	1.0 Nos.
24	Damper DA-21 with position: Open and Manual Multi blade Control Damper type and at IG Cell Exhaust Damper location and size 300 mm x 300 mm	1.0 Nos.
25	Damper DA-22 with position: Open and Manual Multi blade Control Damper type and at PCF Room Exhaust Damper location and size 400 mm x 400 mm	1.0 Nos.
26	Damper DA-23 with position: Open and Manual Butterfly Damper type and at Pool Top Exhaust Damper location and size Dia. 200 mm NB	1.0 Nos
27	Damper DA-24 with position: Open and Manual Multi blade Control Damper type and at Reactor Hall Ceiling Exhaust Damper location and size 200 mm x 200 mm	1.0 Nos.
28	Dampers DA-25, DA-26 with position: Open and Manual Multi blade Control Damper type and at Basement Corridor Damper location and size 900 mm x 900 mm	1.0 Nos.
29	Damper DA-27 with position: Open and Manual Multi blade Control Damper type and at Pool Cooling Shutdown Pump Room Exhaust Damper location and size 300 mm x 300 mm	1.0 Nos.
30	Damper DA-28 with position: Open and Manual Multi blade Control Damper type and at Vacuum Pump Room Damper location and size 100 mm x 100 mm	1.0 Nos.
31	Damper DA-29 with position: Open and Manual Multi blade Control Damper type and at Sorber Bed Room Damper location and size 200 mm x 200 mm	1.0 Nos.

Sr. No.	Item Description	Quantity
32	Damper DA-30 with position: Open and Manual Multi blade Control Damper type and at Freezer Dryer Room Damper location and size 200 mm x 200 mm	1.0 Nos.
33	Damper DA-31 with position: Open and Manual Multi blade Control Damper type and at Recombination Unit Room Damper location and size 200 mm x 200 mm	1.0 Nos.
34	Damper DA-32 with position: Open and Manual Multi blade Control Damper type and at Heavy Water Ion Exchanger Gallery Damper location and size 300 mm x 300 mm	1.0 Nos.
35	Dampers DA-33 with position: Open and Manual Multi blade Control Damper type and at Helium Cover Gas Room Damper location and size 200 mm x 200 mm	1.0 Nos.
36	Dampers DA-34 with position: Open and Manual Multi blade Control Damper type and at Delay Tank Room Damper location and size 800 mm x 800 mm	1.0 Nos.
37	Dampers DA-35 with position: Open and Manual Multi blade Control Damper type and at Basement Exhaust Inlet Damper location and size 800 mm x 800 mm	1.0 Nos.
38	Dampers DA-36 with position: Open and Manual Multi blade Control Damper type and at Combined Exhaust of Hot Cells Damper location and size 200 mm x 200 mm	1.0 Nos.
39	Dampers DA-37, DA-38 with position: Open and Manual Multi blade Control Damper type and at Sub-Basement Corridor Damper location and size 900 mm x 900 mm	1.0 Nos.
40	Dampers DA-39 with position: Open and Manual Multi blade Control Damper type and at Dump Tank & Sump Tank Pump Area Damper location and size 300 mm x 300 mm	1.0 Nos.
41	Dampers DA-40 with position: Open and Manual Multi blade Control Damper type and at Area on top of Sump Tank Damper location and size 300 mm x 300 mm	1.0 Nos.
42	Dampers DA-41 with position: Open and Manual Multi blade Control Damper type and at AreBehind Dump Tank Damper location and size 200 mm x 200 mm	1.0 Nos.
43	Dampers DA-42 with position: Open and Manual Multi blade Control Damper type and at Common Exhaust Duct from Dump Tank & Sump Tank Areas Damper location and size 400 mm x 400 mm	1.0 Nos.
44	Dampers DA-43 with position: Open and Manual Multi blade Control Damper type and at Heavy Water Tank & Equipment Room Damper location and size 900 mm x 900 mm	1.0 Nos.
45	Dampers DA-44 with position: Open and Manual Multi blade Control Damper type and at Sub-basement exhaust before plenum Damper	1.0 Nos.

Sr. No.	Item Description	Quantity
	location and size 900 mm x 900 mm	
46	Dampers DA-45 with position: Open and Manual Multi blade Control Damper type and at Basement exhaust before plenum Damper location and size 900 mm x 900 mm	1.0 Nos.
47	Dampers DA-46 with position: Open and Manual Multi blade Control Damper type and at Reactor Hall Exhaust before plenum Damper location and size 600 mm x 600 mm	1.0 Nos.
48	Dampers DA-47 with position: Open and Manual Multi blade Control Damper type and at Containment Isolation Valve on exhaust side Damper location and size 1300 mm x 1300 mm, pneumatic actuator, solenoid valves, air receiver	1.0 Nos.
49	Dampers DA-48 with position: Open and Manual Multi blade Control Damper type and at Isolation Valve on Emergency Exhaust Fan Damper location and size 400 mm x 400 mm	1.0 Nos.
50	Dampers DA-49, DA-50 with position: Open and Motorised Multi blade Control Damper type and at Suction of Main exhaust fans Damper location and size 1300 mm x 1300 mm	1.0 Nos.
51	Dampers DA-51, DA-52 with position: Open and Passive Backdraft Damper type and at Discharge of Main Exhaust Fans Damper location and size 1300 mm x 1300 mm	2.0 Nos.
52	Dampers DA-53, DA-54 with position: Closed and Motorised Multi blade Control Damper type and at Suction of Emergency Exhaust Fans Damper location and size 400 mm x 400 mm	2.0 Nos.
53	Dampers DA-55, DA-56 with position: Open and Passive Backdraft Damper type and at Discharge of Emergency Exhaust Fans Damper location and size 400 mm x 400 mm	2.0 Nos.
54	Dampers DA-57 with position: Closed and Motorised Fire Damper type and at Exhaust of Sub-Basement Damper location and size 400 mm x 400 mm	1.0 Nos.
55	Dampers DA-58 with position: Closed and Motorised Fire Damper type and at Exhaust of Basement Damper location and size 400 mm x 400 mm	1.0 Nos.
56	Dampers DA-59 with position: Closed and Motorised Fire Damper type and at Exhaust of Reactor Hall Damper location and size 400 mm x 400 mm	1.0 Nos.
57	Dampers DA-60 with position: Closed and Motorised Fire Damper type and at Common line of Smoke Extraction Fan Damper location and size 400 mm x 400 mm	1.0 Nos.
58	Dampers DA-61, DA-62 with position: Closed and Motorised Multi blade Control Damper type and at Suction of Smoke Extraction Fans Damper location and size 400 mm x 400 mm	2.0 Nos.

Sr. No.	Item Description	Quantity
59	Dampers DA-63, DA-64 with position: NA and Passive Backdraft Damper type and at Discharge of Smoke Extraction Fans Damper location and size 400 mm x 400 mm	2.0 Nos.
	M6-S2: BOQ for Control Building Air Conditioning and Ventilation System	
1	Isolation Damper of type Motor actuated having Damper size as per duct size, Drive Motor with class II power supply	20.0 Nos.
2	Fire Damper of type Fusable link having Damper size as per duct size	15.0 Nos.
3	Flow adjustment dampers of type Flow splitter damper having Single/Double vane type damper with Al grill	20.0 Nos.
4	Back draft dampers of type Dead weight type having One-way flow damper for parallel supply fan discharge application	4.0 Nos.
5	Air Handling Unit of type Chilled water-cooling coils type having 2 x 100% supply fans (DIDW type), 1 operating 1 standby, 52000 CMH airflow, 100 mm SPWG developed pressure at rated flow, 80 Tr cooling capacity	1.0 Nos.
6	DX coil-based package unit of type Direct refrigerant expansion type having 2 x 100% supply fans (DIDW type), 1 operating 1 standby, 35000 CMH airflow, 100 mm SPWG developed pressure at rated flow, 30 Tr cooling capacity	1.0 Nos.
7	Smoke Extractor Fan of type Exhaust fan for smoke application having 12000 CMH air discharge, 100 mm SPWG suction pressure at rated flow	2.0 Nos.
8	Ducting of type Insulated GI ducting having Square or rectangular cross section of varying sizes made of 1.2 mm GI sheet	2000 sqm
9	Insulation of type Thermal having 25 mm Nitrile rubber with Al sheet	2000 sqm
10	Pre-filter & Coarse filter having GI wire mesh type	As per AHU design
	M6-S3: BOQ for Filter house, GT lab Air Conditioning and Ventilation System	
1	Isolation Damper of type Motor actuated having Damper size as per duct size, Drive Motor with class II power supply	30.0 Nos.
2	Fire Damper of type Fusable link having Damper size as per duct size	15.0 Nos.
3	Flow adjustment dampers of type Flow splitter damper having Single/Double vane type damper with Al grill	50.0 Nos.
4	Back draft dampers of type Dead weight type having One-way flow damper for parallel fan application	24.0 Nos.
5	Air Handling Unit-1 of type Chilled water-cooling coils type,	1.0 Nos.

Sr. No.	Item Description	Quantity
	Recirculation mode operation having 2 x 100% supply fans (DIDW type), 1 operating 1 standby, 11000 CMH airflow, 125 mm SPWG developed pressure at rated flow, 12 Tr cooling capacity	
6	Air Handling Unit-2 of type Chilled water-cooling coils type, Once Through mode operation having 2 x 100% supply fans (DIDW type), 1 operating 1 standby, 8500 CMH airflow, 75 mm SPWG developed pressure at rated flow, 44 Tr cooling capacity	1.0 Nos.
7	Fan Coil Unit of type Chilled water coils having 200 CMH airflow, 2 KW (0.56 Tr)	19.0 Nos.
8	Air Washer Fan of type Water scrubbing based cleaning and evaporative cooling having 2 x 100 % supply fans (DIDW type), 1 operating 1 standby, 45000 CMH airflow, 100 mm SPWG developed pressure at rated flow, Enclosure: RCC, brick masonry	2.0 Nos.
9	Air Washer Housing of type Tank in Enclosure having Tank made of RCC, Enclosure made of brick masonry	1.0 Nos.
10	Air Washer filters of type Pre and coarse filters having 2 ft x 2 ft Cartridge, Pressure drop 0.6 in SPWG	Based on design
11	Air Washer Pump of type Centrifugal having 2 x 100 % capacity, 1 operating 1 standby, Horizontal mounting, Capacity as per detailed design of air washer plant	2.0 Nos.
12	Air washer pads of type Chamber having Honeycomb mesh type pads, Distribution header with nozzles, Moisture Eliminator	Based on design
13	Common Exhaust fan for stack discharge of type NA having 2 x 100% supply fans (DIDW type), 1 operating 1 standby, 13500 CMH airflow, 125 mm SPWG developed pressure at rated flow	2.0 Nos.
14	Common Exhaust fan for atmospheric discharge of type NA having 2 x 100% supply fans (DIDW type), 1 operating 1 standby, 38000 CMH airflow, 100 mm SPWG developed pressure at rated flow	2.0 Nos.
15	Individual Exhaust fans of type Propeller Fan having Standard exhaust fans for heavy duty and continuous use, 200 CMH discharge capacity	100.0 Nos.
16	Ducting of type Insulated GI ducting having Square or rectangular cross section of varying sizes made of 1.2 mm GI sheet	6000 sqm
17	Insulation of type Thermal having 25 mm Nitrile rubber with Al sheet	1000 sqm
18	HEPA Filters of type NA having Cartridge type, 2 x 2 ft each, 1700 CMH	30.0 Nos.
	M6-S4: BOQ for Service Building and Substation Air Conditioning and Ventilation System	
1	Service Building Supply Air Washer Unit: Draw through type. Honeycomb type air washer pad - One centrifugal DIDW fans.	2.0 Nos.

Sr. No.	Item Description	Quantity
	Polyethylene cloth filter. Honeycomb type air washer pad. Flow: 67000 m3/hr, Static Pressure: 10-inch WG. Drive: 3 phase Induction Motor with belt drive, Input Voltage & Frequency: 415V, 50 Hz, Fan Motor synchronous speed (RPM): 1500, Fan Motor Rating: 92 kW, Two centrifugal air-washer pumps (1 Operating & 1 Standby) and its associated piping, fan performance tested as per AMCA-210.	
2	Substation Building Supply Air-washer Unit: Draw through type. Honeycomb type air-washer pad - One centrifugal DIDW fans. Polyethylene cloth filter. Honeycomb type air washer pad. Flow: 29000 m3/hr, Static Pressure: 8-inch WG. Drive: 3 phase Induction Motor with belt drive, Input Voltage & Frequency: 415V, 50 Hz, Fan Motor synchronous speed (RPM): 1500, Fan Motor Rating: 30 kW. Two centrifugal air-washer pumps (1 Operating & 1 Standby) and its associated piping, fan performance tested as per AMCA-210.	2.0 Nos.
3	Service Building Exhaust Fan: Centrifugal fan - DIDW fans. Flow: 28000 m3/hr, Static Pressure: 8-inch WG, Drive: 3 phase Induction Motor with belt drive, Input Voltage & Frequency: 415V, 50 Hz, Fan Motor synchronous speed (RPM): 1500, Fan Motor Rating: 30 kW, performance tested as per AMCA-210.	2.0 Nos.
4	Supplementary Control Room & Substation Building Main Air Handling Unit: Draw through type. Chilled Water Cooled - One centrifugal DIDW fans. Polyethylene cloth filter. 42 TR capacity cooling coil, Multi-row deep. Flow: 31000 m3/hr, Static Pressure: 4.5-inch WG, Drive: 3 phase Induction Motor with belt drive, Input Voltage & Frequency: 415V, 50 Hz, Fan Motor synchronous speed (RPM): 1500, Fan Motor Rating: 22 kW, fan performance tested as per AMCA-210, cooling coil tested as per AHRI 410 and complete unit as per AHRI 440.	2.0 Nos.
5	Supplementary Control Room & Substation Building Auxiliary Air Handling Unit: Draw through type. DX Cooling Coil - One centrifugal DIDW fans. Polyethylene cloth filter. 42 TR capacity DX cooling coil, Multi-row deep. Flow: 31000 m3/hr, Static Pressure: 4.5-inch WG, Drive: 3 phase Induction Motor with belt drive, Input Voltage & Frequency: 415V, 50 Hz, Fan Motor synchronous speed (RPM): 1500, Fan Motor Rating: 22 kW, fan performance tested as per AMCA-210, cooling coil tested as per AHRI 410 and complete unit as per AHRI 440.	2.0 Nos.
6	Propeller Fans: Wall Mounted Propeller Fans - Sizing/Rating as per Datasheet	as req.
7	In Basement, at Damper location: Corridor 2 with Stairs 1 with Manual Flow Adjustment Damper type and having size: 300 x 300	1.0 Nos.
8	In Basement, at Damper location: Corridor 2 with Stairs 1 with	1.0 Nos.

Sr. No.	Item Description	Quantity
	Manual Isolation Damper type and having size: 300 x 300	
9	In Basement, at Damper location: Process Equipment Area with Manual Flow Adjustment Damper type and having size: 900 x 900	1.0 Nos.
10	In Basement, at Damper location: Process Equipment Area Supply with Manual Isolation Damper type and having size: 900 x 900	1.0 Nos.
11	In Basement, at Damper location: Crane Area with Manual Flow Adjustment Damper type and having size: 350 x 350	1.0 Nos.
12	In Basement, at Damper location: Crane Area with Manual Isolation Damper type and having size: 350 x 350	1.0 Nos.
13	In Ground Floor, at Damper location: Corridor-2 with Manual Flow Adjustment Damper type and having size: 250 x 250	1.0 Nos.
14	In Ground Floor, at Damper location: Corridor-2 with Manual Isolation Damper type and having size: 250 x 250	1.0 Nos.
15	In Ground Floor, at Damper location: Stairs-1 with Manual Flow Adjustment Damper type and having size: 100 x 100	1.0 Nos.
16	In Ground Floor, at Damper location: Stairs-1 with Manual Isolation Damper type and having size: 100 x 100	1.0 Nos.
17	In Ground Floor, at Damper location: Stairs-2 with Manual Flow Adjustment Damper type and having size: 100 x 100	1.0 Nos.
18	In Ground Floor, at Damper location: Stairs-2 with Manual Isolation Damper type and having size: 100 x 100	1.0 Nos.
19	In Ground Floor, at Damper location: Stairs-3 with Manual Flow Adjustment Damper type and having size: 100 x 100	1.0 Nos.
20	In Ground Floor, at Damper location: Stairs-3 with Manual Isolation Damper type and having size: 100 x 100	1.0 Nos.
21	In Ground Floor, at Damper location: Circulation Area-1 with Manual Flow Adjustment Damper type and having size: 200 x 200	1.0 Nos.
22	In Ground Floor, at Damper location: Circulation Area-1 with Manual Isolation Damper type and having size: 200 x 200	1.0 Nos.
23	In Ground Floor, at Damper location: Mech. Maintenance Room with Manual Flow Adjustment Damper type and having size: 150 x 150	1.0 Nos.
24	In Ground Floor, at Damper location: Mech. Maintenance Room with Manual Isolation Damper type and having size: 150 x 150	1.0 Nos.
25	In Ground Floor, at Damper location: Operators Room with Manual Flow Adjustment Damper type and having size: 150 x 150	1.0 Nos.
26	In Ground Floor, at Damper location: Operators Room with Manual Isolation Damper type and having size: 150 x 150	1.0 Nos.
27	In Ground Floor, at Damper location: Circulation Area-2 with Manual Flow Adjustment Damper type and having size: 200 x 200	1.0 Nos.

Sr. No.	Item Description	Quantity
28	In Ground Floor, at Damper location: Circulation Area-2 with Manual Isolation Damper type and having size: 200 x 200	1.0 Nos.
29	In Ground Floor, at Damper location: Corridor-3 with Manual Flow Adjustment Damper type and having size: 450 x 450	1.0 Nos.
30	In Ground Floor, at Damper location: Corridor-3 with Manual Isolation Damper type and having size: 450 x 450	1.0 Nos.
31	In Ground Floor, at Damper location: First Floor Stairs-1 Supply with Manual Flow Adjustment Damper type and having size: 150 x 150	1.0 Nos.
32	In Ground Floor, at Damper location: First Floor Stairs-1 Supply with Manual Isolation Damper type and having size: 150 x 150	1.0 Nos.
33	In Ground Floor, at Damper location: First Floor Stairs-2 Supply with Manual Flow Adjustment Damper type and having size: 200 x 200	1.0 Nos.
34	In Ground Floor, at Damper location: First Floor Stairs-2 Supply with Manual Isolation Damper type and having size: 200 x 200	1.0 Nos.
35	In Ground Floor, at Damper location: First Floor Corridor-1 Supply with Manual Flow Adjustment Damper type and having size: 450 x 450	1.0 Nos.
36	In Ground Floor, at Damper location: First Floor Corridor-1 Supply with Manual Isolation Damper type and having size: 450 x 450	1.0 Nos.
37	In Ground Floor, at Damper location: First Floor Corridor-2 Supply with Manual Flow Adjustment Damper type and having size: 350 x 350	1.0 Nos.
38	In Ground Floor, at Damper location: First Floor Corridor-2 Supply with Manual Isolation Damper type and having size: 350 x 350	1.0 Nos.
39	In Ground Floor, at Damper location: First Floor Corridor-3 Supply with Manual Flow Adjustment Damper type and having size: 350 x 350	1.0 Nos.
40	In Ground Floor, at Damper location: First Floor Corridor-3 Supply with Manual Isolation Damper type and having size: 350 x 350	1.0 Nos.
41	In Ground Floor, at Damper location: Second Floor Stairs-1 Supply with Manual Flow Adjustment Damper type and having size: 150 x 150	1.0 Nos.
42	In Ground Floor, at Damper location: Second Floor Stairs-1 Supply with Manual Isolation Damper type and having size: 150 x 150	1.0 Nos.
43	In Ground Floor, at Damper location: Second Floor Stairs-2 Supply with Manual Flow Adjustment Damper type and having size: 150 x 150	1.0 Nos.
44	In Ground Floor, at Damper location: Second Floor Stairs-2 Supply with Manual Isolation Damper type and having size: 150 x 150	1.0 Nos.
45	In Ground Floor, at Damper location: Second Floor Corridor-1	1.0 Nos.

Sr. No.	Item Description	Quantity
	Supply with Manual Flow Adjustment Damper type and having size: 200 x 200	
46	In Ground Floor, at Damper location: Second Floor Corridor-1 Supply with Manual Isolation Damper type and having size: 200 x 200	1.0 Nos.
47	In Ground Floor, at Damper location: Second Floor Corridor-2 Supply with Manual Flow Adjustment Damper type and having size: 350 x 350	1.0 Nos.
48	In Ground Floor, at Damper location: Second Floor Corridor-2 Supply with Manual Isolation Damper type and having size: 350 x 350	1.0 Nos.
49	In Ground Floor, at Damper location: Second Floor Corridor-5 Supply with Manual Flow Adjustment Damper type and having size: 300 x 300	1.0 Nos.
50	In Ground Floor, at Damper location: Second Floor Corridor-5 Supply with Manual Isolation Damper type and having size: 300 x 300	1.0 Nos.
51	In Ground Floor, at Damper location: Fan Discharge with Passive Backdraft Damper type and having size: 1300 x 1300	2.0 Nos.
52	In Ground Floor, at Damper location: Fan Suction with Manual Flow Adjustment Damper type and having size: 1300 x 1300	2.0 Nos.
53	In Ground Floor, at Damper location: Basement Cable Area 1 with Manual Flow Adjustment Damper type and having size: 350 x 350	1.0 Nos.
54	In Ground Floor, at Damper location: Basement Cable Area 1 with Manual Isolation Damper type and having size: 350 x 350	1.0 Nos.
55	In Ground Floor, at Damper location: Basement Corridor-1 with Manual Flow Adjustment Damper type and having size: 300 x 300	1.0 Nos.
56	In Ground Floor, at Damper location: Basement Corridor-1 with Manual Isolation Damper type and having size: 300 x 300	1.0 Nos
57	In Ground Floor, at Damper location: Basement Cable Area 2 with Manual Flow Adjustment Damper type and having size: 300 x 300	1.0 Nos.
58	In Ground Floor, at Damper location: Basement Cable Area 2 with Manual Isolation Damper type and having size: 300 x 300	1.0 Nos.
59	In Ground Floor, at Damper location: Ground Floor DG Panel Room with Manual Flow Adjustment Damper type and having size: 150 x 150	1.0 Nos.
60	In Ground Floor, at Damper location: Ground Floor DG Panel Room with Manual Isolation Damper type and having size: 150 x 150	1.0 Nos
61	In Ground Floor, at Damper location: Ground Floor Corridor-1 with Manual Flow Adjustment Damper type and having size: 250 x 250	1.0 Nos.

Sr. No.	Item Description	Quantity
62	In Ground Floor, at Damper location: Ground Floor Corridor-1 with Manual Isolation Damper type and having size: 250 x 250	1.0 Nos.
63	In Ground Floor, at Damper location: Ground Floor 6.6 kV Bus-D with Manual Flow Adjustment Damper type and having size: 300 x 300	1.0 Nos.
64	In Ground Floor, at Damper location: Ground Floor 6.6 kV Bus-D with Manual Isolation Damper type and having size: 300 x 300	1.0 Nos.
65	In Ground Floor, at Damper location: Ground Floor 6.6 kV Bus-C with Manual Flow Adjustment Damper type and having size: 300 x 300	1.0 Nos.
66	In Ground Floor, at Damper location: Ground Floor 6.6 kV Bus-C with Manual Isolation Damper type and having size: 300 x 300	1.0 Nos.
67	In Ground Floor, at Damper location: Ground Floor Class III Bus-J with Manual Flow Adjustment Damper type and having size: 200 x 200	1.0 Nos.
68	In Ground Floor, at Damper location: Ground Floor Class III Bus-J with Manual Isolation Damper type and having size: 200 x 200	1.0 Nos.
69	In Ground Floor, at Damper location: Ground Floor Class III Bus-L with Manual Flow Adjustment Damper type and having size: 200 x 200	1.0 Nos.
70	In Ground Floor, at Damper location: Ground Floor Class III Bus-L with Manual Isolation Damper type and having size: 200 x 200	1.0 Nos.
71	In Ground Floor, at Damper location: Ground Floor Class III Bus-K with Manual Flow Adjustment Damper type and having size: 200 x 200	1.0 Nos.
72	In Ground Floor, at Damper location: Ground Floor Class III Bus-K with Manual Isolation Damper type and having size: 200 x 200	1.0 Nos.
73	In Ground Floor, at Damper location: Ground Floor 11 kV Bus-A with Manual Flow Adjustment Damper type and having size: 450 x 450	1.0 Nos.
74	In Ground Floor, at Damper location: Ground Floor 11 kV Bus-A with Manual Isolation Damper type and having size: 450 x 450	1.0 Nos.
75	In Ground Floor, at Damper location: Ground Floor 11 kV Bus-B with Manual Flow Adjustment Damper type and having size: 450 x 450	1.0 Nos.
76	In Ground Floor, at Damper location: Ground Floor 11 kV Bus-B with Manual Isolation Damper type and having size: 450 x 450	1.0 Nos.
77	In Ground Floor, at Damper location: Ground Floor DG Panel Room with Manual Flow Adjustment Damper type and having size: 150 x 150	1.0 Nos.
78	In Ground Floor, at Damper location: Ground Floor DG Panel Room with Manual Isolation Damper type and having size: 150 x 150	1.0 Nos.

Sr. No.	Item Description	Quantity
79	In Ground Floor, at Damper location: Fan Discharge with Passive Backdraft Damper type and having size: 900 x 900	2.0 Nos.
80	In Ground Floor, at Damper location: Fan Suction with Manual Flow Adjustment Damper type and having size: 900 x 900	2.0 Nos.
81	In First Floor, at Damper location: Corridor Supply with Manual Flow Adjustment Damper type and having size: 200 x 200	1.0 Nos.
82	In First Floor, at Damper location: Corridor Supply with Manual Isolation Damper type and having size: 200 x 200	1.0 Nos.
83	In First Floor, at Damper location: Corridor Return with Manual Flow Adjustment Damper type and having size: 200 x 200	1.0 Nos.
84	In First Floor, at Damper location: Corridor Return with Manual Isolation Damper type and having size: 200 x 200	1.0 Nos.
85	In First Floor, at Damper location: ACVR-3 Supply with Manual Flow Adjustment Damper type and having size: 200 x 200	1.0 Nos.
86	In First Floor, at Damper location: ACVR-3 Supply with Manual Isolation Damper type and having size: 200 x 200	1.0 Nos.
87	In First Floor, at Damper location: ACVR-3 Return with Manual Flow Adjustment Damper type and having size: 200 x 200	1.0 Nos.
88	In First Floor, at Damper location: ACVR-3 Return with Manual Isolation Damper type and having size: 200 x 200	1.0 Nos.
89	In First Floor, at Damper location: Bus-N Supply with Manual Flow Adjustment Damper type and having size: 200 x 200	1.0 Nos.
90	In First Floor, at Damper location: Bus-N Supply with Manual Isolation Damper type and having size: 200 x 200	1.0 Nos.
91	In First Floor, at Damper location: Bus-N Return with Manual Flow Adjustment Damper type and having size: 200 x 200	1.0 Nos.
92	In First Floor, at Damper location: Bus-N Return with Manual Isolation Damper type and having size: 200 x 200	1.0 Nos.
93	In First Floor, at Damper location: Bus-P Supply with Manual Flow Adjustment Damper type and having size: 200 x 200	1.0 Nos.
94	In First Floor, at Damper location: Bus-P Supply with Manual Isolation Damper type and having size: 200 x 200	1.0 Nos.
95	In First Floor, at Damper location: Bus-P Return with Manual Flow Adjustment Damper type and having size: 200 x 200	1.0 Nos.
96	In First Floor, at Damper location: Bus-P Return with Manual Isolation Damper type and having size: 200 x 200	1.0 Nos.
97	In First Floor, at Damper location: Spare Room Supply with Manual Flow Adjustment Damper type and having size: 200 x 200	1.0 Nos.
98	In First Floor, at Damper location: Spare Room Supply with Manual Isolation Damper type and having size: 200 x 200	1.0 Nos.

Sr. No.	Item Description	Quantity
99	In First Floor, at Damper location: Spare Room Return with Manual Flow Adjustment Damper type and having size: 200 x 200	1.0 Nos.
100	In First Floor, at Damper location: Spare Room Return with Manual Isolation Damper type and having size: 200 x 200	1.0 Nos.
101	In First Floor, at Damper location: CUPS-4 Supply with Manual Flow Adjustment Damper type and having size: 200 x 200	1.0 Nos.
102	In First Floor, at Damper location: CUPS-4 Supply with Manual Isolation Damper type and having size: 200 x 200	1.0 Nos.
103	In First Floor, at Damper location: CUPS-4 Return with Manual Flow Adjustment Damper type and having size: 200 x 200	1.0 Nos.
104	In First Floor, at Damper location: CUPS-4 Return with Manual Isolation Damper type and having size: 200 x 200	1.0 Nos.
105	In First Floor, at Damper location: ACVR-1 Supply with Manual Flow Adjustment Damper type and having size: 200 x 200	1.0 Nos.
106	In First Floor, at Damper location: ACVR-1 Supply with Manual Isolation Damper type and having size: 200 x 200	1.0 Nos.
107	In First Floor, at Damper location: ACVR-1 Return with Manual Flow Adjustment Damper type and having size: 200 x 200	1.0 Nos.
108	In First Floor, at Damper location: ACVR-1 Return with Manual Isolation Damper type and having size: 200 x 200	1.0 Nos.
109	In First Floor, at Damper location: APFC-1 Supply with Manual Flow Adjustment Damper type and having size: 100 x 100	1.0 Nos.
110	In First Floor, at Damper location: APFC-1 Supply with Manual Isolation Damper type and having size: 100 x 100	1.0 Nos.
111	In First Floor, at Damper location: APFC-1 Return with Manual Flow Adjustment Damper type and having size: 100 x 100	1.0 Nos.
112	In First Floor, at Damper location: APFC-1 Return with Manual Isolation Damper type and having size: 100 x 100	1.0 Nos.
113	In First Floor, at Damper location: CUPS-1 Supply with Manual Flow Adjustment Damper type and having size: 200 x 200	1.0 Nos.
114	In First Floor, at Damper location: CUPS-1 Supply with Manual Isolation Damper type and having size: 200 x 200	1.0 Nos.
115	In First Floor, at Damper location: CUPS-1 Return with Manual Flow Adjustment Damper type and having size: 200 x 200	1.0 Nos.
116	In First Floor, at Damper location: CUPS-1 Return with Manual Isolation Damper type and having size: 200 x 200	1.0 Nos.
117	In First Floor, at Damper location: PUPS-1 Supply with Manual Flow Adjustment Damper type and having size: 400 x 400	1.0 Nos.
118	In First Floor, at Damper location: PUPS-1 Supply with Manual Isolation Damper type and having size: 400 x 400	1.0 Nos.

Sr. No.	Item Description	Quantity
119	In First Floor, at Damper location: PUPS-1 Return with Manual Flow Adjustment Damper type and having size: 400 x 400	1.0 Nos.
120	In First Floor, at Damper location: PUPS-1 Return with Manual Isolation Damper type and having size: 400 x 400	1.0 Nos.
121	In First Floor, at Damper location: Corridor-2 Supply with Manual Flow Adjustment Damper type and having size: 300 x 300	1.0 Nos.
122	In First Floor, at Damper location: Corridor-2 Supply with Manual Isolation Damper type and having size: 300 x 300	1.0 Nos.
123	In First Floor, at Damper location: Corridor-2 Return with Manual Flow Adjustment Damper type and having size: 300 x 300	1.0 Nos.
124	In First Floor, at Damper location: Corridor-2 Return with Manual Isolation Damper type and having size: 300 x 300	1.0 Nos.
125	In First Floor, at Damper location: Supplementary Control Room Supply with Manual Flow Adjustment Damper type and having size: 200 x 200	1.0 Nos.
126	In First Floor, at Damper location: Supplementary Control Room Supply with Manual Isolation Damper type and having size: 200 x 200	1.0 Nos.
127	In First Floor, at Damper location: Supplementary Control Room Return with Manual Flow Adjustment Damper type and having size: 200 x 200	1.0 Nos.
128	In First Floor, at Damper location: Supplementary Control Room Return with Manual Isolation Damper type and having size: 200 x 200	1.0 Nos.
129	In First Floor, at Damper location: SCC Channel Room-S Supply with Manual Flow Adjustment Damper type and having size: 150 x 150	1.0 Nos.
130	In First Floor, at Damper location: SCC Channel Room-S Supply with Manual Isolation Damper type and having size: 150 x 150	1.0 Nos.
131	In First Floor, at Damper location: SCC Channel Room-S Return with Manual Flow Adjustment Damper type and having size: 150 x 150	1.0 Nos.
132	In First Floor, at Damper location: SCC Channel Room-S Return with Manual Isolation Damper type and having size: 150 x 150	1.0 Nos.
133	In First Floor, at Damper location: SCC Channel Room-T Supply with Manual Flow Adjustment Damper type and having size: 150 x 150	1.0 Nos.
134	In First Floor, at Damper location: SCC Channel Room-T Supply with Manual Isolation Damper type and having size: 150 x 150	1.0 Nos.
135	In First Floor, at Damper location: SCC Channel Room-T Return	1.0 Nos.

Sr. No.	Item Description	Quantity
	with Manual Flow Adjustment Damper type and having size: 150 x 150	
136	In First Floor, at Damper location: SCC Channel Room-T Return with Manual Isolation Damper type and having size: 150 x 150	1.0 Nos.
137	In First Floor, at Damper location: SCC Channel Room-U Supply with Manual Flow Adjustment Damper type and having size: 150 x 150	1.0 Nos.
138	In First Floor, at Damper location: SCC Channel Room-U Supply with Manual Isolation Damper type and having size: 150 x 150	1.0 Nos.
139	In First Floor, at Damper location: SCC Channel Room-U Return with Manual Flow Adjustment Damper type and having size: 150 x 150	1.0 Nos.
140	In First Floor, at Damper location: SCC Channel Room-U Return with Manual Isolation Damper type and having size: 150 x 150	1.0 Nos.
141	In First Floor, at Damper location: SCC-PS-Room-S Supply with Manual Flow Adjustment Damper type and having size: 150 x 150	1.0 Nos.
142	In First Floor, at Damper location: SCC-PS-Room-S Supply with Manual Isolation Damper type and having size: 150 x 150	1.0 Nos.
143	In First Floor, at Damper location: SCC-PS-Room-S Return with Manual Flow Adjustment Damper type and having size: 150 x 150	1.0 Nos.
144	In First Floor, at Damper location: SCC-PS-Room-S Return with Manual Isolation Damper type and having size: 150 x 150	1.0 Nos.
145	In First Floor, at Damper location: SCC-PS-Room-T Supply with Manual Flow Adjustment Damper type and having size: 150 x 150	1.0 Nos.
146	In First Floor, at Damper location: SCC-PS-Room-T Supply with Manual Isolation Damper type and having size: 150 x 150	1.0 Nos.
147	In First Floor, at Damper location: SCC-PS-Room-T Return with Manual Flow Adjustment Damper type and having size: 150 x 150	1.0 Nos.
148	In First Floor, at Damper location: SCC-PS-Room-T Return with Manual Isolation Damper type and having size: 150 x 150	1.0 Nos.
149	In First Floor, at Damper location: SCC-PS-Room-U Supply with Manual Flow Adjustment Damper type and having size: 150 x 150	1.0 Nos.
150	In First Floor, at Damper location: SCC-PS-Room-U Supply with Manual Isolation Damper type and having size: 150 x 150	1.0 Nos.
151	In First Floor, at Damper location: SCC-PS-Room-U Return with Manual Flow Adjustment Damper type and having size: 150 x 150	1.0 Nos.
152	In First Floor, at Damper location: SCC-PS-Room-U Return with Manual Isolation Damper type and having size: 150 x 150	1.0 Nos.
153	In Second Floor, at Damper location: Corridor-3 Supply with Manual Flow Adjustment Damper type and having size: 200 x 200	1.0 Nos.

Sr. No.	Item Description	Quantity
154	In Second Floor, at Damper location: Corridor-3 Supply with Manual Isolation Damper type and having size: 200 x 200	1.0 Nos.
155	In Second Floor, at Damper location: Corridor-3 Return with Manual Flow Adjustment Damper type and having size: 200 x 200	1.0 Nos.
156	In Second Floor, at Damper location: Corridor-3 Return with Manual Isolation Damper type and having size: 200 x 200	1.0 Nos.
157	In Second Floor, at Damper location: Corridor-4 Supply with Manual Flow Adjustment Damper type and having size: 150 x 150	1.0 Nos.
158	In Second Floor, at Damper location: Corridor-4 Supply with Manual Isolation Damper type and having size: 150 x 150	1.0 Nos.
159	In Second Floor, at Damper location: Corridor-4 Return with Manual Flow Adjustment Damper type and having size: 150 x 150	1.0 Nos.
160	In Second Floor, at Damper location: Corridor-4 Return with Manual Isolation Damper type and having size: 150 x 150	1.0 Nos.
161	In Second Floor, at Damper location: PUPS-2 Supply with Manual Flow Adjustment Damper type and having size: 400 x 400	1.0 Nos.
162	In Second Floor, at Damper location: PUPS-2 Supply with Manual Isolation Damper type and having size: 400 x 400	1.0 Nos.
163	In Second Floor, at Damper location: PUPS-2 Return with Manual Flow Adjustment Damper type and having size: 400 x 400	1.0 Nos.
164	In Second Floor, at Damper location: PUPS-2 Return with Manual Isolation Damper type and having size: 400 x 400	1.0 Nos.
165	In Second Floor, at Damper location: ACVR-2 Supply with Manual Flow Adjustment Damper type and having size: 200 x 200	1.0 Nos.
166	In Second Floor, at Damper location: ACVR-2 Supply with Manual Isolation Damper type and having size: 200 x 200	1.0 Nos.
167	In Second Floor, at Damper location: ACVR-2 Return with Manual Flow Adjustment Damper type and having size: 200 x 200	1.0 Nos.
168	In Second Floor, at Damper location: ACVR-2 Return with Manual Isolation Damper type and having size: 200 x 200	1.0 Nos.
169	In Second Floor, at Damper location: CUPS-3 Supply with Manual Flow Adjustment Damper type and having size: 400 x 400	1.0 Nos.
170	In Second Floor, at Damper location: CUPS-3 Supply with Manual Isolation Damper type and having size: 400 x 400	1.0 Nos.
171	In Second Floor, at Damper location: CUPS-3 Return with Manual Flow Adjustment Damper type and having size: 400 x 400	1.0 Nos.
172	In Second Floor, at Damper location: CUPS-3 Return with Manual Isolation Damper type and having size: 400 x 400	1.0 Nos.
173	In Second Floor, at Damper location: Bus-M Supply with Manual Flow Adjustment Damper type and having size: 200 x 200	1.0 Nos.

Sr. No.	Item Description	Quantity
174	In Second Floor, at Damper location: Bus-M Supply with Manual Isolation Damper type and having size: 200 x 200	1.0 Nos.
175	In Second Floor, at Damper location: Bus-M Return with Manual Flow Adjustment Damper type and having size: 200 x 200	1.0 Nos.
176	In Second Floor, at Damper location: Bus-M Return with Manual Isolation Damper type and having size: 200 x 200	1.0 Nos.
177	In Second Floor, at Damper location: Bus-Q Supply with Manual Flow Adjustment Damper type and having size: 200 x 200	1.0 Nos.
178	In Second Floor, at Damper location: Bus-Q Supply with Manual Isolation Damper type and having size: 200 x 200	1.0 Nos.
179	In Second Floor, at Damper location: Bus-Q Return with Manual Flow Adjustment Damper type and having size: 200 x 200	1.0 Nos.
180	In Second Floor, at Damper location: Bus-Q Return with Manual Isolation Damper type and having size: 200 x 200	1.0 Nos.
181	In Second Floor, at Damper location: APFC-2 Supply with Manual Flow Adjustment Damper type and having size: 100 x 100	1.0 Nos.
182	In Second Floor, at Damper location: APFC-2 Supply with Manual Isolation Damper type and having size: 100 x 100	1.0 Nos.
183	In Second Floor, at Damper location: APFC-2 Supply with Manual Flow Adjustment Damper type and having size: 100 x 100	1.0 Nos.
184	In Second Floor, at Damper location: APFC-2 Supply with Manual Isolation Damper type and having size: 100 x 100	1.0 Nos.
185	In Second Floor, at Damper location: Spare Room Supply with Manual Flow Adjustment Damper type and having size: 200 x 200	1.0 Nos.
186	In Second Floor, at Damper location: Spare Room Supply with Manual Isolation Damper type and having size: 200 x 200	1.0 Nos.
187	In Second Floor, at Damper location: Spare Room Return with Manual Flow Adjustment Damper type and having size: 200 x 200	1.0 Nos.
188	In Second Floor, at Damper location: Spare Room Return with Manual Isolation Damper type and having size: 200 x 200	1.0 Nos.
189	In Second Floor, at Damper location: CUPS-2 Supply with Manual Flow Adjustment Damper type and having size: 200 x 200	1.0 Nos.
190	In Second Floor, at Damper location: CUPS-2 Supply with Manual Isolation Damper type and having size: 200 x 200	1.0 Nos.
191	In Second Floor, at Damper location: CUPS-2 Return with Manual Flow Adjustment Damper type and having size: 200 x 200	1.0 Nos.
192	In Second Floor, at Damper location: CUPS-2 Return with Manual Isolation Damper type and having size: 200 x 200	1.0 Nos.
193	In Second Floor, at Damper location: Fan Discharge with Passive Backdraft Damper type and having size: 900 x 900	2.0 Nos.

Sr. No.	Item Description	Quantity
194	In Second Floor, at Damper location: Fan Suction with Manual Flow Adjustment Damper type and having size: 900 x 900	2.0 Nos.
195	In SB Exhaust, FF, at Damper location: Process Equipment Area Exhaust with Manual Flow Adjustment Damper type and having size: 900 x 900	1.0 Nos.
196	In SB Exhaust, FF, at Damper location: Process Equipment Area Exhaust with Manual Isolation Damper type and having size: 900 x 900	1.0 Nos.
197	In SB Exhaust, FF, at Damper location: Circulation Area-1 Exhaust with Manual Flow Adjustment Damper type and having size: 200 x 200	1.0 Nos.
198	In SB Exhaust, FF, at Damper location: Circulation Area-1 Exhaust with Manual Isolation Damper type and having size: 200 x 200	1.0 Nos.
199	In SB Exhaust, FF, at Damper location: Circulation Area-2 Exhaust with Manual Flow Adjustment Damper type and having size: 200 x 200	1.0 Nos.
200	In SB Exhaust, FF, at Damper location: Circulation Area-2 Exhaust with Manual Isolation Damper type and having size: 200 x 200	1.0 Nos.
201	In SB Exhaust, FF, at Damper location: Mech. Maintenance Room Exhaust with Manual Flow Adjustment Damper type and having size: 150 x 150	1.0 Nos.
202	In SB Exhaust, FF, at Damper location: Mech. Maintenance Room Exhaust with Manual Isolation Damper type and having size: 150 x 150	1.0 Nos.
203	In SB Exhaust, FF, at Damper location: Operators Room Exhaust with Manual Flow Adjustment Damper type and having size: 150 x 150	1.0 Nos.
204	In SB Exhaust, FF, at Damper location: Operators Room Exhaust with Manual Isolation Damper type and having size: 150 x 150	1.0 Nos.
205	In SB Exhaust, FF, at Damper location: Fan Discharge with Passive Backdraft Damper type and having size: 900 x 900	2.0 Nos.
206	In SB Exhaust, FF, at Damper location: Fan Suction with Manual Flow Adjustment Damper type and having size: 900 x 900	2.0 Nos.
	M6-S5: BOQ for Admin Building Air Conditioning and Ventilation System	
1	Air Handling Unit #1 of Draw through type, Cooling Coils with Two centrifugal DIDW fans (1 Operating & 1 Standby), Polyethylene cloth filter, 67 TR capacity cooling coil, Multi-row deep, Flow: 43000 m3/hr, Static Pressure: 100 mm WG, VFD Motor, VFD Input Voltage & Frequency: 415V, 50 Hz, Fan Motor synchronous speed (RPM):	1.0 Nos

Sr. No.	Item Description	Quantity
	1500, Fan Motor Rating: 30 kW, fan performance tested as per AMCA 210, coil tested as per AHRI 410 and complete unit as per AHRI 440.	
2	Air Handling Unit #2 of Draw through type, Cooling Coils with Two centrifugal DIDW fans (1 Operating & 1 Standby), Polyethylene cloth filter, 58 TR capacity cooling coil, Multi-row deep, Flow: 42000 m3/hr, Static Pressure: 100 mm WG, VFD Motor, VFD Input Voltage & Frequency: 415V, 50 Hz, Fan Motor synchronous speed (RPM): 1500, Fan Motor Rating: 30 kW, fan performance tested as per AMCA 210, coil tested as per AHRI 410 and complete unit as per AHRI 440.	1.0 Nos
3	Air Handling Unit #3 of Draw through type with Two centrifugal DIDW fans (1 Operating & 1 Standby), Polyethylene cloth filter, 55 TR capacity cooling coil, Multi-row deep, Flow: 42000 m3/hr, Static Pressure: 100 mm WG, VFD Motor, VFD Input Voltage & Frequency: 415V, 50 Hz, Fan Motor synchronous speed (RPM): 1500, Fan Motor Rating: 22 kW, fan performance tested as per AMCA 210, coil tested as per AHRI 410 and complete unit as per AHRI 440.	1.0 Nos.
4	Air Handling Unit #4 of Draw through type with Two centrifugal DIDW fans (1 Operating & 1 Standby), Polyethylene cloth filter, 63 TR capacity cooling coil, Multi-row deep, Flow: 42000 m3/hr, Static Pressure: 100 mm WG, VFD Motor, VFD Input Voltage & Frequency: 415V, 50 Hz, Fan Motor synchronous speed (RPM): 1500, Fan Motor Rating: 22 kW, fan performance tested as per AMCA 210, coil tested as per AHRI 410 and complete unit as per AHRI 440	1.0 Nos.
5	Galvanised Steel duct	8000 sq. m
6	Pressure Independent Variable Air Volume box of size 200 mm x 200 mm, with all instrumentation, performance testing	1.0 Nos.
7	Pressure Independent Variable Air Volume box of size 150 mm x 150 mm with all instrumentation, performance testing	1.0 Nos.
8	Pressure Independent Variable Air Volume box of size 250 mm x 250 mm with all instrumentation, performance testing	1.0 Nos.
9	Pressure Independent Variable Air Volume box of size 500 mm x 500 mm with all instrumentation, performance testing	1.0 Nos.
10	Pressure Independent Variable Air Volume box of size 200 mm x 200 mm with all instrumentation, performance testing	1.0 Nos.
11	Pressure Independent Variable Air Volume box of size 200 mm x 200 mm with all instrumentation, performance testing	1.0 Nos.
12	Pressure Independent Variable Air Volume box of size 250 mm x	1.0 Nos.

Sr. No.	Item Description	Quantity
	250 mm with all instrumentation, performance testing	
13	Pressure Independent Variable Air Volume box of size 300 mm x 300 mm with all instrumentation, performance testing	1.0 Nos.
14	Pressure Independent Variable Air Volume box of size 400 mm x 400 mm with all instrumentation, performance testing	1.0 Nos.
15	Pressure Independent Variable Air Volume box of size 150 mm x 150 mm with all instrumentation, performance testing	1.0 Nos.
16	Pressure Independent Variable Air Volume box of size 200 mm x 200 mm with all instrumentation, performance testing	1.0 Nos.
17	Pressure Independent Variable Air Volume box of size 150 mm x 150 mm with all instrumentation, performance testing	1.0 Nos.
18	Pressure Independent Variable Air Volume box of size 150 mm x 150 mm with all instrumentation, performance testing	1.0 Nos.
19	Pressure Independent Variable Air Volume box of size 250 mm x 250 mm with all instrumentation, performance testing	1.0 Nos.
20	Pressure Independent Variable Air Volume box of size 150 mm x 150 mm with all instrumentation, performance testing	1.0 Nos.
21	Pressure Independent Variable Air Volume box of size 150 mm x 150 mm with all instrumentation, performance testing	1.0 Nos.
22	Pressure Independent Variable Air Volume box of size 150 mm x 150 mm with all instrumentation, performance testing	1.0 Nos.
23	Pressure Independent Variable Air Volume box of size 400 mm x 400 mm with all instrumentation, performance testing	1.0 Nos.
24	Pressure Independent Variable Air Volume box of size 300 mm x 300 mm with all instrumentation, performance testing	1.0 Nos.
25	Pressure Independent Variable Air Volume box of size 200 mm x 200 mm with all instrumentation, performance testing	1.0 Nos.
26	Pressure Independent Variable Air Volume box of size 150 mm x 150 mm with all instrumentation, performance testing	1.0 Nos.
27	Pressure Independent Variable Air Volume box of size 250 mm x 250 mm with all instrumentation, performance testing	1.0 Nos.
28	Pressure Independent Variable Air Volume box of size 200 mm x 200 mm with all instrumentation, performance testing	1.0 Nos.
29	Pressure Independent Variable Air Volume box of size 300 mm x 300 mm with all instrumentation, performance testing	1.0 Nos.
30	Pressure Independent Variable Air Volume box of size 150 mm x 150 mm with all instrumentation, performance testing	1.0 Nos.
31	Pressure Independent Variable Air Volume box of size 350 mm x 350 mm with performance testing	1.0 Nos.

Sr. No.	Item Description	Quantity
32	Backdraft Damper of Size 1000 mm x 1000 mm with performance testing, leak testing	2.0 Nos.
33	Isolation Damper of Size 1000 mm x 1000 mm with performance testing, leak all instrumentation, testing	2.0 Nos.
34	Pressure Independent Variable Air Volume box of size 150 mm x 150 mm with all instrumentation, performance testing	1.0 Nos.
35	Pressure Independent Variable Air Volume box of size 250 mm x 250 mm with all instrumentation, performance testing	1.0 Nos.
36	Pressure Independent Variable Air Volume box of size 450 mm x 450 mm with all instrumentation, performance testing	1.0 Nos.
37	Pressure Independent Variable Air Volume box of size 200 mm x 200 mm with all instrumentation, performance testing	1.0 Nos.
38	Pressure Independent Variable Air Volume box of size 150 mm x 150 mm with all instrumentation, performance testing	1.0 Nos.
39	Pressure Independent Variable Air Volume box of size 550 mm x 550 mm with all instrumentation, performance testing	1.0 Nos.
40	Pressure Independent Variable Air Volume box of size 250 mm x 250 mm with all instrumentation, performance testing	1.0 Nos.
41	Pressure Independent Variable Air Volume box of size 150 mm x 150 mm with all instrumentation, performance testing	1.0 Nos.
42	Pressure Independent Variable Air Volume box of size 250 mm x 250 mm with all instrumentation, performance testing	1.0 Nos.
43	Pressure Independent Variable Air Volume box of size 300 mm x 300 mm with all instrumentation, performance testing	1.0 Nos.
44	Pressure Independent Variable Air Volume box of size 300 mm x 300 mm with all instrumentation, performance testing	1.0 Nos.
45	Pressure Independent Variable Air Volume box of size 200 mm x 200 mm with all instrumentation, performance testing	1.0 Nos.
46	Pressure Independent Variable Air Volume box of size 350 mm x 350 mm with all instrumentation, performance testing	1.0 Nos.
47	Pressure Independent Variable Air Volume box of size 150 mm x 150 mm with all instrumentation, performance testing	1.0 Nos.
48	Pressure Independent Variable Air Volume box of size 150 mm x 150 mm with all instrumentation, performance testing	1.0 Nos.
49	Pressure Independent Variable Air Volume box of size 150 mm x 150 mm with all instrumentation, performance testing	1.0 Nos.
50	Pressure Independent Variable Air Volume box of size 150 mm x 150 mm with all instrumentation, performance testing	1.0 Nos.
51	Pressure Independent Variable Air Volume box of size 200 mm x 200 mm with all instrumentation, performance testing	1.0 Nos.

Sr. No.	Item Description	Quantity
52	Pressure Independent Variable Air Volume box of size 200 mm x 200 mm with all instrumentation, performance testing	1.0 Nos.
53	Pressure Independent Variable Air Volume box of size 150 mm x 150 mm with performance testing	1.0 Nos.
54	Pressure Independent Variable Air Volume box of size 150 mm x 150 mm with all instrumentation, performance testing	1.0 Nos.
55	Pressure Independent Variable Air Volume box of size 300 mm x 300 mm with all instrumentation, performance testing	1.0 Nos.
56	Pressure Independent Variable Air Volume box of size 350 mm x 350 mm with all instrumentation, performance testing	1.0 Nos.
57	Backdraft Damper of Size 1000 mm x 1000 mm with performance testing, leak testing	2.0 Nos.
58	Isolation Damper of Size 1000 mm x 1000 mm with performance testing, leak testing	2.0 Nos.
59	Pressure Independent Variable Air Volume box of size 200 mm x 200 mm with performance testing	1.0 Nos.
60	Pressure Independent Variable Air Volume box of size 200 mm x 200 mm with performance testing	1.0 Nos.
61	Pressure Independent Variable Air Volume box of size 250 mm x 250 mm with all instrumentation, performance testing	1.0 Nos.
62	Pressure Independent Variable Air Volume box of size 450 mm x 450 mm with all instrumentation, performance testing	1.0 Nos.
63	Pressure Independent Variable Air Volume box of size 150 mm x 150 mm with all instrumentation, performance testing	1.0 Nos.
64	Pressure Independent Variable Air Volume box of size 200 mm x 200 mm with all instrumentation, performance testing	1.0 Nos.
65	Pressure Independent Variable Air Volume box of size 150 mm x 150 mm with all instrumentation, performance testing	1.0 Nos.
66	Pressure Independent Variable Air Volume box of size 700 mm x 700 mm with all instrumentation, performance testing	1.0 Nos.
67	Pressure Independent Variable Air Volume box of size 250 mm x 250 mm with all instrumentation, performance testing	1.0 Nos.
68	Pressure Independent Variable Air Volume box of size 300 mm x 300 mm with all instrumentation, performance testing	1.0 Nos.
69	Pressure Independent Variable Air Volume box of size 150 mm x 150 mm with all instrumentation, performance testing	1.0 Nos.
70	Pressure Independent Variable Air Volume box of size 400 mm x 400 mm with all instrumentation, performance testing	1.0 Nos.
71	Pressure Independent Variable Air Volume box of size 200 mm x 200 mm with all instrumentation, performance testing	1.0 Nos.

Sr. No.	Item Description	Quantity
72	Pressure Independent Variable Air Volume box of size 200 mm x 200 mm with all instrumentation, performance testing	1.0 Nos.
73	Pressure Independent Variable Air Volume box of size 200 mm x 200 mm with all instrumentation, performance testing	1.0 Nos.
74	Pressure Independent Variable Air Volume box of size 200 mm x 200 mm with all instrumentation, performance testing	1.0 Nos.
75	Pressure Independent Variable Air Volume box of size 250 mm x 200 mm with all instrumentation, performance testing	1.0 Nos.
76	Pressure Independent Variable Air Volume box of size 300 mm x 200 mm with all instrumentation, performance testing	1.0 Nos.
77	Backdraft Damper of Size 1000 mm x 1000 mm with performance testing, leak testing	2.0 Nos.
78	Isolation Damper of Size 1000 mm x 1000 mm with performance testing, leak testing	2.0 Nos.
79	Pressure Independent Variable Air Volume box of size 500 mm x 500 mm with all instrumentation, performance testing	1.0 Nos.
80	Pressure Independent Variable Air Volume box of size 300 mm x 300 mm with all instrumentation, performance testing	1.0 Nos.
81	Pressure Independent Variable Air Volume box of size 900 mm x 900 mm with all instrumentation, performance testing	1.0 Nos.
82	Pressure Independent Variable Air Volume box of size 200 mm x 200 mm with all instrumentation, performance testing	1.0 Nos.
83	Pressure Independent Variable Air Volume box of size 100 mm x 100 mm with all instrumentation, performance testing	1.0 Nos.
84	Pressure Independent Variable Air Volume box of size 100 mm x 100 mm with all instrumentation, performance testing	1.0 Nos.
85	Pressure Independent Variable Air Volume box of size 150 mm x 150 mm with all instrumentation, performance testing	1.0 Nos.
86	Pressure Independent Variable Air Volume box of size 200 mm x 200 mm with all instrumentation, performance testing	1.0 Nos.
87	Pressure Independent Variable Air Volume box of size 200 mm x 200 mm with all instrumentation, performance testing	1.0 Nos.
88	Pressure Independent Variable Air Volume box of size 300 mm x 300 mm with all instrumentation, performance testing	1.0 Nos.
89	Pressure Independent Variable Air Volume box of size 150 mm x 150 mm with all instrumentation, performance testing	1.0 Nos.
90	Pressure Independent Variable Air Volume box of size 200 mm x 200 mm with all instrumentation, performance testing	1.0 Nos.
91	Pressure Independent Variable Air Volume box of size 200 mm x 200 mm with all instrumentation, performance testing	1.0 Nos.

Sr. No.	Item Description	Quantity
92	Backdraft Damper of Size 1000 mm x 1000 mm with performance testing, leak testing	2.0 Nos.
93	Isolation Damper of Size 1000 mm x 1000 mm with performance testing, leak testing	2.0 Nos.
94	Flow Adjustment Damper 500 mm x 500 mm with performance testing, leak testing	2.0 Nos.
95	Flow Adjustment Damper 600 mm x 600 mm with performance testing, leak testing	2.0 Nos.
	M6-S6: BOQ for Service Water System	
1	SW Pumps: Centrifugal, horizontal, Drive motor: 3 phase induction motor with Flow: 1500lpm, Head: 45mWC, Motor Operating Voltage & Frequency: 415V, 50Hz, Motor synchronous speed: 1500 RPM, Motor Rating: 22 kW, with performance testing	2.0 Nos.
2	Service Building Sump Pumps: Centrifugal, horizontal, Drive motor: 3 phase induction motor with Flow: 250 lpm, Head: 20 mWC, Motor Operating Voltage & Frequency: 415V, 50Hz, Motor synchronous speed: 1500 RPM, Motor Rating: 3.7 kW	2.0 Nos.
3	Decontamination Building Sump Pumps: Centrifugal, horizontal, Drive motor: 3 phase induction motor with Flow: 250 lpm, Head: 20 mWC, Motor Operating Voltage & Frequency: 415V, 50Hz, Motor synchronous speed: 1500 RPM, Motor Rating: 3.7 kW	2.0 Nos.
4	RCSB Pump house Sump Pumps: Centrifugal, horizontal, Drive motor: 3 phase induction motor with Flow: 250 lpm, Head: 20 mWC, Motor Operating Voltage & Frequency: 415V, 50Hz, Motor synchronous speed: 1500 RPM, Motor Rating: 3.7 kW	2.0 Nos.
5	SW Pump suction strainers: Perforated Basket type with Flow: 1500 lpm, Perforation Size: 3mm diameter	2.0 Nos.
6	Sump Pump suction strainers: Perforated Basket type with Flow: 250 lpm, Perforation Size: 3mm diameter	6.0 Nos.
7	Gate Valve at Service Water Tank inlet of size DN150 of Carbon Steel Material, Class 150	2.0 Nos.
8	Gate Valve at Service Water Tank inlet of size DN150 of Carbon Steel Material, Class 150	2.0 Nos.
9	Float Valve at Service Water Tank inlet of size DN150 of Carbon Steel Material, Class 150	2.0 Nos.
10	Gate Valve at Service Water Tank outlet of size DN150 of Carbon Steel Material, Class 150	2.0 Nos.
11	Gate Valve at Service Water Pump Inlet of size DN150 of Carbon Steel Material, Class 150	2.0 Nos.
12	Gate Valve at SCW CT basin bypass of size DN150 of Carbon Steel	1.0 Nos.

Sr. No.	Item Description	Quantity
	Material, Class 150	
13	Swing Check Valve at Pump Discharge of size DN100 of Carbon Steel Material, Class 150 with dashpot, limit switches	2.0 Nos.
14	Globe Valve at Pump Discharge of size DN100 of Carbon Steel Material, Class 150	2.0 Nos.
15	Globe Valve at SCW CT makeup line of size DN100 of Carbon Steel Material, Class 150	1.0 Nos.
16	Globe Valve at Service Water Tank recirculation line of size DN100 of Carbon Steel Material, Class 150	1.0 Nos.
17	Gate Valve at Service Water Tank recirculation line of size DN100 of Carbon Steel Material, Class 150	2.0 Nos.
18	Gate Valve at Blowdown Tank Inlet of size DN100 of Carbon Steel Material, Class 150	2.0 Nos.
19	Gate Valve at SCW CT basin inlet of size DN50 of Carbon Steel Material, Class 150	6.0 Nos.
20	Gate Valve at SCW CT basin inlet of size DN50 of Carbon Steel Material, Class 150	6.0 Nos.
21	Float Valve at SCW CT basin inlet of size DN50 of Carbon Steel Material, Class 150	6.0 Nos.
22	Gate Valve at SCW CT basin overflow line of size DN50 of Carbon Steel Material, Class 150	6.0 Nos.
23	Gate Valve at SCW CT basin drain line of size DN50 of Carbon Steel Material, Class 150	6.0 Nos.
24	Globe Valve at DHRS CT basin makeup line of size DN50 of Carbon Steel Material, Class 150	1.0 Nos.
25	Globe Valve at DHRS CT basin makeup line of size DN50 of Carbon Steel Material, Class 150	3.0 Nos.
26	Globe Valve at DHRS CT basin makeup line of size DN50 of Carbon Steel Material, Class 150	3.0 Nos.
27	Float Valve at DHRS CT basin inlet of size DN50 of Carbon Steel Material, Class 150	3.0 Nos.
28	Gate Valve at DHRS CT basin overflow line of size DN50 of Carbon Steel Material, Class 150	3.0 Nos.
29	Gate Valve at DHRS CT basin drain line of size DN50 of Carbon Steel Material, Class 150	3.0 Nos.
30	Gate Valve at DHRS CT basin bypass line of size DN50 of Carbon Steel Material, Class 150	1.0 Nos.
31	Globe Valve at MCW CT basin makeup line of size DN50 of Carbon Steel Material, Class 150	1.0 Nos.

Sr. No.	Item Description	Quantity
32	Gate Valve at MCW CT basin inlet of size DN50 of Carbon Steel Material, Class 150	2.0 Nos.
33	Gate Valve at MCW CT basin inlet of size DN50 of Carbon Steel Material, Class 150	2.0 Nos.
34	Float Valve at MCW CT basin inlet of size DN50 of Carbon Steel Material, Class 150	2.0 Nos.
35	Gate Valve at MCW CT basin overflow line of size DN50 of Carbon Steel Material, Class 150	2.0 Nos.
36	Gate Valve at MCW CT basin drain line of size DN50 of Carbon Steel Material, Class 150	2.0 Nos.
37	Gate Valve at MCW CT basin bypass of size DN50 of Carbon Steel Material, Class 150	1.0 Nos.
38	Globe Valve at Filter House & GT Lab Ventilation Airwasher basin makeup line of size DN50 of Carbon Steel Material, Class 150	1.0 Nos.
39	Globe Valve at DHRS CT basin makeup line of size DN50 of Carbon Steel Material, Class 150	2.0 Nos.
40	Globe Valve at DHRS CT basin makeup line of size DN50 of Carbon Steel Material, Class 150	2.0 Nos.
41	Globe Valve at DHRS CT basin makeup line of size DN50 of Carbon Steel Material, Class 150	2.0 Nos.
42	Globe Valve at DHRS CT basin makeup line of size DN50 of Carbon Steel Material, Class 150	2.0 Nos.
43	Globe Valve at DHRS CT basin makeup line of size DN50 of Carbon Steel Material, Class 150	2.0 Nos.
44	Globe Valve at DHRS CT basin makeup line of size DN50 of Carbon Steel Material, Class 150	1.0 Nos.
45	Globe Valve at DHRS CT basin makeup line of size DN50 of Carbon Steel Material, Class 150	1.0 Nos.
46	Globe Valve at DHRS CT basin makeup line of size DN50 of Carbon Steel Material, Class 150	2.0 Nos.
47	Globe Valve at DHRS CT basin makeup line of size DN50 of Carbon Steel Material, Class 150	2.0 Nos.
48	Globe Valve at DHRS CT basin makeup line of size DN50 of Carbon Steel Material, Class 150	2.0 Nos.
49	Gate Valve at RB Ventilation Airwasher basin overflow line of size DN50 of Carbon Steel Material, Class 150	2.0 Nos.
50	Gate Valve at RB Ventilation Airwasher basin drain line of size DN50 of Carbon Steel Material, Class 150	2.0 Nos.
51	Gate Valve at RB Ventilation Airwasher basin bypass of size DN50 of Carbon Steel Material, Class 150	1.0 Nos.

Sr. No.	Item Description	Quantity
52	Globe Valve at Sub-Station Ventilation Airwasher basin makeup line of size DN50 of Carbon Steel Material, Class 150	1.0 Nos.
53	Gate Valve at Sub-Station Ventilation Airwasher basin inlet of size DN50 of Carbon Steel Material, Class 150	2.0 Nos.
54	Gate Valve at Sub-Station Ventilation Airwasher basin inlet of size DN50 of Carbon Steel Material, Class 150	2.0 Nos.
55	Float Valve at Sub-Station Ventilation Airwasher basin inlet of size DN50 of Carbon Steel Material, Class 150	2.0 Nos.
56	Gate Valve at Sub-Station Ventilation Airwasher basin overflow line of size DN50 of Carbon Steel Material, Class 150	2.0 Nos.
57	Gate Valve at Sub-Station Ventilation Airwasher basin drain line of size DN50 of Carbon Steel Material, Class 150	2.0 Nos.
58	Gate Valve at Sub-Station Ventilation Airwasher basin bypass of size DN50 of Carbon Steel Material, Class 150	1.0 Nos.
59	Globe Valve at Service Building Ventilation Airwasher basin makeup line of size DN50 of Carbon Steel Material, Class 150	1.0 Nos.
60	Gate Valve at Service Building Ventilation Airwasher basin inlet of size DN50 of Carbon Steel Material, Class 150	2.0 Nos.
61	Gate Valve at Service Building Ventilation Airwasher basin inlet of size DN50 of Carbon Steel Material, Class 150	2.0 Nos.
62	Float Valve at Service Building Ventilation Airwasher basin inlet of size DN50 of Carbon Steel Material, Class 150	2.0 Nos.
63	Gate Valve at Service Building Ventilation Airwasher basin overflow line of size DN50 of Carbon Steel Material, Class 150	2.0 Nos.
64	Gate Valve at Service Building Ventilation Airwasher basin drain line of size DN50 of Carbon Steel Material, Class 150	2.0 Nos.
65	Gate Valve at Service Building Ventilation Airwasher basin bypass of size DN50 of Carbon Steel Material, Class 150	1.0 Nos.
66	Gate Valve at MCW Shutdown Makeup Tank Outlet of size DN50 of Carbon Steel Material, Class 150	2.0 Nos.
67	Gate Valve at MCW Shutdown Makeup Tank Inlet of size DN50 of Carbon Steel Material, Class 150	1.0 Nos.
68	Gate Valve at MCW Shutdown Makeup Tank Inlet of size DN50 of Carbon Steel Material, Class 150	1.0 Nos.
69	Float Valve at MCW Shutdown Makeup Tank Inlet of size DN50 of Carbon Steel Material, Class 150	1.0 Nos.
70	Gate Valve at DHRS Shutdown Makeup Tank Outlet of size DN50 of Carbon Steel Material, Class 150	2.0 Nos.
71	Gate Valve at DHRS Shutdown Makeup Tank Inlet of size DN50 of Carbon Steel Material, Class 150	1.0 Nos.

Sr. No.	Item Description	Quantity
72	Gate Valve at DHRS Shutdown Makeup Tank Inlet of size DN50 of Carbon Steel Material, Class 150	1.0 Nos.
73	Float Valve at DHRS Shutdown Makeup Tank Inlet of size DN50 of Carbon Steel Material, Class 150	1.0 Nos.
74	Foot Valve at Service Building Sump Pump Suction of size DN50 of Carbon Steel Material, Class 150	2.0 Nos.
75	Swing Check Valve at Service Building Sump Pump Discharge of size DN50 of Carbon Steel Material, Class 150	2.0 Nos.
76	Globe Valve at Service Building Sump Pump Discharge of size DN50 of Carbon Steel Material, Class 150	2.0 Nos.
77	Foot Valve at Decontamination Building Sump Pump Suction of size DN50 of Carbon Steel Material, Class 150	2.0 Nos.
78	Swing Check Valve at Decontamination Building Sump Pump Discharge of size DN50 of Carbon Steel Material, Class 150	2.0 Nos.
79	Globe Valve at Decontamination Building Sump Pump Discharge of size DN50 of Carbon Steel Material, Class 150	2.0 Nos.
80	Foot Valve at Underground Pump House Sump Pump Suction of size DN50 of Carbon Steel Material, Class 150	2.0 Nos.
81	Swing Check Valve at Underground Pump House Sump Pump Discharge of size DN50 of Carbon Steel Material, Class 150	2.0 Nos.
82	Globe Valve at Underground Pump House Sump Pump Discharge of size DN50 of Carbon Steel Material, Class 150	2.0 Nos.
83	Gate Valve at Blowdown Tank Inlet of size DN50 of Carbon Steel Material, Class 150	2.0 Nos.
84	Diaphragm Valve at Service Water Pumps Drain Valves of size DN15 of Carbon Steel Material, Class 150	2.0 Nos.
85	Diaphragm Valve at Service Water Pumps Vent Valves of size DN15 of Carbon Steel Material, Class 150	2.0 Nos.
86	Diaphragm Valve at Decontamination Building Sump Pumps Drain Valves of size DN15 of Carbon Steel Material, Class 150	2.0 Nos.
87	Diaphragm Valve at Decontamination Building Sump Pumps Vent Valves of size DN15 of Carbon Steel Material, Class 150	2.0 Nos.
88	Diaphragm Valve at Service Building Sump Pumps Drain Valves of size DN15 of Carbon Steel Material, Class 150	2.0 Nos.
89	Diaphragm Valve at Service Building Sump Pumps Vent Valves of size DN15 of Carbon Steel Material, Class 150	2.0 Nos.
90	Diaphragm Valve at Underground Pump House Sump Pumps Drain Valves of size DN15 of Carbon Steel Material, Class 150	2.0 Nos.
91	Diaphragm Valve at Underground Pump House Sump Pumps Vent Valves of size DN15 of Carbon Steel Material, Class 150	2.0 Nos.

Sr. No.	Item Description	Quantity
92	Diaphragm Valve at Process Line Vents & Drains of size DN15 of Carbon Steel Material, Class 150	40.0 Nos.
93	Diaphragm Valve at Service Water Pump suction pressure element root valve of size DN15 of Carbon Steel Material, Class 150	2.0 Nos.
94	Diaphragm Valve at Service Water Pump discharge pressure element root valve of size DN15 of Carbon Steel Material, Class 150	2.0 Nos.
95	Diaphragm Valve at Decontamination Building Sump Pump discharge pressure element root valve of size DN15 of Carbon Steel Material, Class 150	2.0 Nos.
96	Diaphragm Valve at Service Building Sump Pump discharge pressure element root valve of size DN15 of Carbon Steel Material, Class 150	2.0 Nos.
97	Diaphragm Valve at Gross Flow measurement orifice element root valves of size DN15 of Carbon Steel Material, Class 150	2.0 Nos.
98	Diaphragm Valve at SCW CT basin level measurement element root valve of size DN15 of Carbon Steel Material, Class 150	6.0 Nos.
99	Diaphragm Valve at DHRS CT basin level measurement element root valve of size DN15 of Carbon Steel Material, Class 150	3.0 Nos.
100	Diaphragm Valve at MCW CT basin level measurement element root valve of size DN15 of Carbon Steel Material, Class 150	2.0 Nos.
101	Diaphragm Valve at Filter House & GT Lab Ventilation Airwasher basin level measurement element root valve of size DN15 of Carbon Steel Material, Class 150	2.0 Nos.
102	Diaphragm Valve at RB Ventilation Airwasher basin level measurement element root valve of size DN15 of Carbon Steel Material, Class 150	2.0 Nos.
103	Diaphragm Valve at Substation Ventilation Airwasher basin level measurement element root valve of size DN15 of Carbon Steel Material, Class 150	2.0 Nos.
104	Diaphragm Valve at Service Building Ventilation Airwasher basin level measurement element root valve of size DN15 of Carbon Steel Material, Class 150	2.0 Nos.
105	Seamless Pipe, DN150, Sch. 40 of material Galvanised Carbon Steel	75 m
106	Seamless Pipe, DN100, Sch. 40 of material Galvanised Carbon Steel	485 m
107	Seamless Pipe, DN80, Sch. 40 of material Galvanised Carbon Steel	135 m
108	Seamless Pipe, DN50, Sch. 40 of material Galvanised Carbon Steel	990 m
109	Seamless Pipe, DN15, Sch. 40 of material Galvanised Carbon Steel	52 m
110	Butt Welded 90° bend, DN150, Sch. 40 of material Galvanised	10.0 Nos.

Sr. No.	Item Description	Quantity
	Carbon Steel	
111	Butt Welded 90° bend, DN100, Sch. 40 of material Galvanised Carbon Steel	82.0 Nos.
112	Butt Welded 90° bend, DN80, Sch. 40 of material Galvanised Carbon Steel	11.0 Nos.
113	Butt Welded 90° bend, DN50, Sch. 40 of material Galvanised Carbon Steel	210.0 Nos.
114	Butt Welded 45° bend, DN100, Sch. 40 of material Galvanised Carbon Steel	3.0 Nos.
115	Butt Welded Standard Tee joint, 150x150, Sch. 40 of material Galvanised Carbon Steel	8.0 Nos.
116	Butt Welded Standard Tee joint, 100x100, Sch. 40 of material Galvanised Carbon Steel	18.0 Nos.
117	Butt Welded Standard Tee joint, 80x80, Sch. 40 of material Galvanised Carbon Steel	2.0 Nos.
118	Butt Welded Standard Tee joint, 50x50, Sch. 40 of material Galvanised Carbon Steel	61.0 Nos.
119	Butt Welded Reducing Tee joint, 150x100 of material Galvanised Carbon Steel	3.0 Nos.
120	Butt Welded Reducing Tee joint, 80x50 of material Galvanised Carbon Steel	3.0 Nos.
121	Butt welded Concentric Reducer, 150x100, Sch. 40 of material Galvanised Carbon Steel	2.0 Nos.
122	Butt Welded Concentric Reducer, 150x50, Sch. 40 of material Galvanised Carbon Steel	6.0 Nos.
123	Butt Welded Concentric Reducer, 100x80, Sch. 40 of material Galvanised Carbon Steel	2.0 Nos.
124	Butt Welded Concentric Reducer, 80x50, Sch. 40 of material Galvanised Carbon Steel	3.0 Nos.
125	SORF, Class 150 Flange DN150 of material Galvanised Carbon Steel	24.0 Nos.
126	SORF, Class 150 Flange DN100 of material Galvanised Carbon Steel	30.0 Nos.
127	SORF, Class 150 Flange DN50 of material Galvanised Carbon Steel	280.0 Nos
128	Class 150 Blind Flange DN150 of material Galvanised Carbon Steel	2.0 Nos.
129	Class 150 Blind Flange DN50 of material Galvanised Carbon Steel	6.0 Nos.
130	Class 3000 Weldolet, 150x50 of material Galvanised Carbon Steel	4.0 Nos.
131	Class 3000 Weldolet, 100x50 of material Galvanised Carbon Steel	14.0 Nos.
132	Class 3000 Weldolet, 50x15 of material Galvanised Carbon Steel	32.0 Nos.

Sr. No.	Item Description	Quantity
133	Class 3000 Threadolet, 150x15 of material Galvanised Carbon Steel	4.0 Nos.
134	Class 3000 Threadolet, 100x15 of material Galvanised Carbon Steel	14.0 Nos.
135	Class 3000 Threadolet, 50x15 of material Galvanised Carbon Steel	32.0 Nos.
136	Class 3000 Plug, DN15 of material Galvanised Carbon Steel	50.0 Nos.
137	CS Hex Bolt & Nuts M20 Bolt with washer, nut & locknut	210.0 Nos.
138	CS Hex Bolt & Nuts M18 Bolt with washer, nut & locknut	1450.0 Nos.
139	Manual with Handwheel Gate Valve, DN 150, Class 150 of material Galvanised Carbon Steel	9.0 Nos.
140	Passive Float Valve, DN 150, Class 150 of material Galvanised Carbon Steel	2.0 Nos.
141	Manual with Handwheel Gate Valve, DN 100, Class 150 of material Galvanised Carbon Steel	4.0 Nos.
142	Manual with Handwheel Globe Valve, DN 100, Class 150 of material Galvanised Carbon Steel	4.0 Nos.
143	Swing Type Check Valve, DN 100, Class 150, with dashpot, limit switches of material Galvanised Carbon Steel	2.0 Nos.
144	Manual with Handwheel Gate Valve, DN 50, Class 150 of material Galvanised Carbon Steel	92.0 Nos.
145	Manual with Handwheel Globe Valve, DN 50, Class 150 of material Galvanised Carbon Steel	7.0 Nos.
146	Swing Type Check Valve, DN 50, Class 150 of material Galvanised Carbon Steel	6.0 Nos.
147	Passive Float Valve, DN 50, Class 150 of material Galvanised Carbon Steel	21.0 Nos.
148	Swing Type Foot Valve, DN 50, Class 150 of material Galvanised Carbon Steel	6.0 Nos.
149	Manual with Handwheel Diaphragm Valve, DN 15, Class 150 of material Galvanised Carbon Steel	85.0 Nos.
	M6-S7: BOQ for Machinery Cooling Water System	
1	MCW Pump-1 & 2 with Motor: Centrifugal pump, Flow: 3000lpm, Head: 50 mWC, Motor: 35 kW, 1500 rpm, 10 bar (g), 60 0C, Carbon steel or better	2.0 Nos
2	Cooling Tower-1 & 2: Induced draft cooling tower, 1.5 MW, FRP	2.0 Nos
3	Pot strainer-1 & 2: Basket strainer, 10 bar (g), 60 0C, 50 mesh (300µ), SA216 Gr. WCB, SA -106 Gr B, SA-516, Grade 60/70	2.0 Nos
4	Gate valve: flanged ends, Class 150, DN200,	14.0 Nos
5	Gate valve: flanged ends, Class 150, DN80	2.0 Nos
6	Gate valve: flanged ends, Class 150, DN40	3.0 Nos
7	Gate valve: flanged ends, Class 150, DN25	7.0 Nos

Sr. No.	Item Description	Quantity
8	Air operated Globe valve: flanged ends, Class 150, DN200	2 Nos
9	Globe valve: flanged ends, Class 150, DN200	2.0 Nos
10	Globe valve: flanged ends, Class 150, DN80	2.0 Nos
11	Globe valve: flanged ends, Class 150, DN40	3.0 Nos
12	Globe valve: flanged ends, Class 150, DN25	1.0 Nos
13	Check valve: flanged ends, Class 150, DN200	2.0 Nos
14	Diaphragm valve: One end socket welded one end threaded, DN15	27.0 Nos
15	Seamless pipe having size DN200 Sch 40 of SA-106 Gr B material with PE end type	510.0 m
16	Seamless pipe having size DN80 Sch 40 of SA-106 Gr B material with PE end type	210.0 m
17	Seamless pipe having size DN40 Sch 40 of SA-106 Gr B material with PE end type	78.0 m
18	Seamless pipe having size DN25 Sch 40 of SA-106 Gr B material with PE end type	90.0 m
19	Seamless pipe having size DN15 Sch 40 of SA-106 Gr B material with PE end type	24.0 m
20	LR 90o seamless elbow having size DN200 Sch 40 of SA234 Gr. WPB material with BW end type	40.0 Nos
21	LR 90o seamless elbow having size DN80 Sch 40 of SA234 Gr. WPB material with BW end type	11.0 Nos
22	90o elbow having size DN40 3000# of SA105 material with SW end type	20.0 Nos
23	90o elbow having size DN25 3000# of SA105 material with SW end type	23.0 Nos
24	90o elbow having size DN15 3000# of SA105 material with SW end type	10.0 Nos
25	Equal seamless tee (equal) having size DN200 Sch 40 of SA234 Gr. WPB material with BW end type	8.0 Nos
26	Equal seamless tee (equal) having size DN80 Sch 40 of SA234 Gr. WPB material with BW end type	5.0 Nos
27	Equal seamless tee having size DN40 3000# of SA105 material with SW end type	5.0 Nos
28	Equal tee having size DN25 3000# of SA105 material with SW end type	5.0 Nos
29	Seamless tee (reducing) having size 80X 40 Sch 40 of SA234 Gr. WPB material with BW end type	3.0 Nos
30	A tee (reducing) having size 40 X 25 3000# of SA105 material with SW end type	8.0 Nos

Sr. No.	Item Description	Quantity
31	A tee (reducing) having size 40 X 15 3000# of SA105 material with SW end type	3.0 Nos
32	A tee (reducing) having size 25 X 15 3000# of SA105 material with SW end type	3.0 Nos
33	Concentric seamless reducer having size 200X80 Sch 40 of SA234 Gr. WPB material with BW end type	3.0 Nos
34	Concentric seamless reducer having size 80X40 Sch 40 of SA234 Gr. WPB material with BW end type	3.0 Nos
35	Concentric seamless reducer having size 40X15 3000# of SA105 material with SW end type	4.0 Nos
36	Concentric seamless reducer having size 25X15 3000# of SA105 material with SW end type	4.0 Nos
37	A SO RF serrated finish flange having size DN200 150# of SA105 material	60.0 Nos
38	A SO RF serrated finish flange having size DN80 150# of SA105 material	15.0 Nos
39	A SW RF serrated finish flange having size DN40 150# of SA105 material	18.0 Nos
40	A SW RF serrated finish flange having size DN25 150# of SA105 material	30.0 Nos
41	Blind RF serrated finish flange having size DN80 150# of SA105 material	4.0 Nos
42	Blind RF serrated finish flange having size DN40 150# of SA105 material	4.0 Nos
43	Blind RF serrated finish flange having size DN25 150# of SA105 material	6.0 Nos
44	Weldolet having size 200×80 Sch 40 of SA105 material with BW end type	3.0 Nos
45	Sockolet having size 200×40 3000# of SA105 material with SW end type	7.0 Nos
46	Sockolet having size 200×15 3000# of SA105 material with SW end type	5.0 Nos
47	Sockolet having size 80×25 3000# of SA105 material with SW end type	4.0 Nos
48	Threadolet having size 200x 25 3000# of SA105 material with threaded ends	5.0 Nos
49	Threadolet having size 200x 15 3000# of SA105 material with threaded ends	10.0 Nos
50	Threadolet having size 80x 15 3000# of SA105 material with threaded ends	5.0 Nos

Sr. No.	Item Description	Quantity
51	Threaded elbolet having size 200x 25 3000# of SA105 material with threaded end type	5.0 Nos
52	Threaded elbolet having size 200×15 3000# of SA105 material with threaded end type	5.0 Nos
53	Threaded elbolet having size 80× 15 3000# of SA105 material with threaded end type	5.0 Nos
54	A hexagonal headed plug having size 15 of SA105 material with threaded end type	25.0 Nos
55	90 mm long bolts having size M-20 of SA 193 Gr B7 material	480.0 Nos
56	A 75mm long bolt having size M-16 of SA 193 Gr B7 material	60.0 Nos
57	A 65mm long bolt having size M-14 of SA 193 Gr B7 material	210.0 Nos
58	A hex nut Blackodised nut having size M-20 of SA 194 Gr 2H material	480.0 Nos
59	A hex nut Blackodised nut having size M-16 of SA 194 Gr 2H material	60.0 Nos
60	A hex nut Blackodised nut having size M-14 of SA 194 Gr 2H material	210.0 Nos
61	A 1.6mm durometer shore A60±5 gasket having size DN200 150# of EPDM material	60.0 Nos
62	Gasket having size DN80 150# of EPDM material	15.0 Nos
63	Gasket having size DN40 150# of EPDM material	20.0 Nos
64	Gasket having size DN25 150# of EPDM material	30.0 Nos
65	All support components of Carbon steel material	Lump sum
	M6-S8: BOQ for Compressed Air System	
1	Air Compressor with drive unit of two stage reciprocating type having flow: std 2 m3/min NTP, Discharge pressure: 8.5 kg/cm2 and fluid handled: Air	2.0 Nos.
2	Air Receiver of horizontal type having volume: 6 m3 and design temperature: 100 C	2.0 Nos.
3	Air Dryer unit of twin tower silica gel adsorber type Fluid handled: Air, capacity: 2 m3/min NTP, and MWP: 8.5 kg/cm2, Design Pressure: 10 kg/cm2,, Air outlet dew point: -43 C	2.0 Nos.
4	Air filter of Porous ceramic filter type having MWP: 8.5 kg/cm2, Design Pressure: 10 kg/cm2, Design temperature: 100 C	6.0 Nos.
5	DN50: Gate valve: flanged ends	50.0 Nos.
6	DN50: Globe valve: flanged ends	10.0 Nos.
7	DN50: Check valve: flanged ends	15.0 Nos.
8	DN50: Diaphragm valve: Flanged	15.0 Nos.
9	DN50: SORF	100.0 Nos.

Sr. No.	Item Description	Quantity
10	DN50: Blind SORF	25.0 Nos.
11	DN25: Gate valve: flanged ends	50.0 Nos.
12	DN25: Globe valve: flanged ends	5.0 Nos.
13	DN25: Check valve: flanged ends	5.0 Nos.
14	DN25: Diaphragm valve: Flanged	5.0 Nos.
15	DN25: Diaphragm Valve: Female Threaded	50.0 Nos.
16	DN25: SORF	75.0 Nos.
17	DN25: Blind SORF	25.0 Nos.
18	DN15: Gate valve: flanged ends	150.0 Nos.
19	DN15: Globe valve: flanged ends	5.0 Nos.
20	DN15: Check valve: flanged ends	10.0 Nos.
21	DN15: Diaphragm valve: Flanged	10.0 Nos.
22	DN15: Diaphragm Valve: Female Threaded	75.0 Nos.
23	DN15: SORF	100.0 Nos.
24	DN15: Blind SORF	25.0 Nos.
25	50 NB Schedule 40 Pipe	1000 m
26	25 NB Schedule 40 Pipe	300 m
27	15 NB Schedule 40 Pipe	400 m
28	2” Elbow	300.0 Nos.
29	1” Elbow	200.0 Nos.
30	½” Elbow	300.0 Nos.
31	2” Equal Tee	100.0 Nos.
32	1” Equal Tee	75.0 Nos.
33	½” Equal Tee	75.0 Nos.
34	2” by 1” Tee	100.0 Nos.
35	2” by ½” Tee	100.0 Nos.
36	1” by ½” Tee	100.0 Nos.
37	2” by 1” Reducers	50.0 Nos.
38	2” by ½” Reducers	50.0 Nos.
39	1” by ½” Reducers	50.0 Nos.
40	2” Cap	50.0 Nos.
41	1” Cap	50.0 Nos.
42	½” Cap	100.0 Nos.
43	2” Plug	50.0 Nos.
44	1” Plug	50.0 Nos.
45	½” Plug	50.0 Nos.

Sr. No.	Item Description	Quantity
46	2” Nipple	75.0 Nos.
47	1” Nipple	75.0 Nos.
48	½” Nipple	75.0 Nos.
49	2” Weldolet	100.0 Nos.
50	1” Weldolet	100.0 Nos.
51	½” Weldolet	100.0 Nos.
52	Respirator manifold	20.0 Nos.
53	50 NB Safety valves	20.0 Nos.
	M6-S9: BOQ for Fire Protection System	
	Fire water piping with fittings to be laid underground/over ground (GI Pipe Sch. 40 as per ASTM A53/A106)	
1	Seamless GI Pipe, DN 300 Sch-40	40 m
2	Seamless GI Pipe, DN 200 Sch-40	1950 m
3	Seamless GI Pipe, DN 150 Sch-40	500 m
4	Seamless GI Pipe, DN 80 Sch-40	150 m
5	Equal Tee, DN 200, Sch. 40	28.0 Nos.
6	Equal Tee, DN 150, Sch. 40	15.0 Nos.
7	90° elbow, DN 200, Sch. 40	20.0 Nos.
8	90° elbow, DN 150, Sch. 40	32.0 Nos.
9	90° elbow, DN 80, Sch. 40	40.0 Nos.
10	Reducer, DN 200 x 150, Sch. 40	5.0 Nos.
11	Reducer, DN 200 x 80, Sch. 40	22.0 Nos.
12	Reducer, DN 150 x 80, Sch. 40	17.0 Nos.
13	Flange, DN 200	5.0 Nos.
14	Flange, DN 150	4.0 Nos.
15	Flange, DN 80	40.0 Nos.
	Gate Valve	
16	Carbon steel DN 300 with counter flange	2.0 Nos.
17	Carbon steel DN 200 with counter flange	15.0 Nos.
18	Carbon steel DN 150 with counter flange	4.0 Nos.
19	Carbon steel DN 80 with counter flange	5.0 Nos.
	Non-return valve for fire services	
20	Cast carbon steel DN 200 dual plate wafer type non-return Valve	4.0 Nos.
21	Cast carbon steel DN 80 dual plate wafer type non-return Valve	4.0 Nos.
22	Hydrant landing valve (Single outlet Type)-65 mm	45.0 Nos.
	Test and drain valve with suitable mounting accessories (FM approved, UL listed)	

Sr. No.	Item Description	Quantity
23	Test and drain valve at each floor	7.0 Nos.
	Hose reel with drum	
24	Hose reel with drum and suitable accessories	20.0 Nos.
	FRP hose cabinet including hose pipe (2) and branch pipe (1)	
25	FRP hose cabinet of size 750 mmX650 mmX250 mm or bigger to suit the requirement of holding 2 no of hose pipe 15m length RRL Type B and SS 304L branch pipe with nozzle	20.0 Nos.
26	Pressure gauge: Pressure gauge 150 mm dia glycerin filled, SS body (Range0 to 15 bar) along with SS syphon tube and ball valve	2.0 Nos.
27	Pressure Switch: Sensor material (SS316L), connection size (1/2" NPT) (Range0 to 15 bar), contact type (SPDT), and protection (IP66/Flameproof) for industrial use	3.0 Nos.
	M6-S10: BOQ for Chilled Water System	
1	Pump suction Valve of type Gate Valve and Manual with flanged connection and having size DN 300 of material Galvanised Carbon Steel with rating of 150 and having design pressure (kg/cm2) and Design Temperature (C) of 12 and (-20) to 80 respectively.	4.0 Nos.
2	Pump discharge Valve of type Gate valve and Manual with flanged connection and having size DN 250 of material Galvanised Carbon Steel with rating of 150 and having design pressure (kg/cm2) and Design Temperature (C) of 12 and (-20) to 80 respectively.	4.0 Nos.
3	Pump discharge Valve of type Check valve and Manual with flanged connection and having size DN 250 of material Galvanised Carbon Steel with rating of 150 and having design pressure (kg/cm2) and Design Temperature (C) of 12 and (-20) to 80 respectively.	4.0 Nos.
4	Strainer inlet valve of type Gate valve and Manual with flanged connection and having size DN 400 of material Galvanised Carbon Steel with rating of 150 and having design pressure (kg/cm2) and Design Temperature (C) of 12 and (-20) to 80 respectively.	2.0 Nos.
5	Strainer outlet valve of type Gate valve and Manual with flanged connection and having size DN 400 of material Galvanised Carbon Steel with rating of 150 and having design pressure (kg/cm2) and Design Temperature (C) of 12 and (-20) to 80 respectively.	2.0 Nos.
6	Strainer bypass valve of type Gate valve and Manual with flanged connection and having size DN 400 of material Galvanised Carbon Steel with rating of 150 and having design pressure (kg/cm2) and Design Temperature (C) of 12 and (-20) to 80 respectively.	1.0 Nos.
7	Valve at common pump discharge of type Gate valve and Manual with flanged connection and having size DN 400 of material Galvanised Carbon Steel with rating of 150 and having design	1.0 Nos.

Sr. No.	Item Description	Quantity
	pressure (kg/cm2) and Design Temperature (C) of 12 and (-20) to 80 respectively.	
8	Valve in DN 250 header of type Gate valve and Manual with flanged connection and having size DN 250 of material Galvanised Carbon Steel with rating of 150 and having design pressure (kg/cm2) and Design Temperature (C) of 12 and (-20) to 80 respectively.	1.0 Nos.
9	Valve in DN 300 header of type Gate valve and Manual with flanged connection and having size DN 300 of material Galvanised Carbon Steel with rating of 150 and having design pressure (kg/cm2) and Design Temperature (C) of 12 and (-20) to 80 respectively.	1.0 Nos.
10	Valve in inlet line in DN150 header of type Gate valve and Manual with flanged connection and having size DN 150 of material Galvanised Carbon Steel with rating of 150 and having design pressure (kg/cm2) and Design Temperature (C) of 12 and (-20) to 80 respectively.	1.0 Nos.
11	Valve in inlet line in DN 150 header of type Gate valve and Manual with flanged connection and having size DN 150 of material Galvanised Carbon Steel with rating of 150 and having design pressure (kg/cm2) and Design Temperature (C) of 12 and (-20) to 80 respectively.	1.0 Nos.
12	Admin building-1 AHU inlet valve of type Gate valve and Manual with flanged connection and having size DN 100 of material Galvanised Carbon Steel with rating of 150 and having design pressure (kg/cm2) and Design Temperature (C) of 12 and (-20) to 80 respectively.	1.0 Nos.
13	Admin building-2 AHU inlet valve of type Gate valve and Manual with flanged connection and having size DN 100 of material Galvanised Carbon Steel with rating of 150 and having design pressure (kg/cm2) and Design Temperature (C) of 12 and (-20) to 80 respectively.	1.0 Nos.
14	Admin building-3 AHU inlet valve of type Gate valve and Auto with flanged connection and having size DN 100 of material Galvanised Carbon Steel with rating of 150 and having design pressure (kg/cm2) and Design Temperature (C) of 12 and (-20) to 80 respectively.	1.0 Nos.
15	Admin building-1 AHU outlet valve of type Gate valve and Manual with flanged connection and having size DN 100 of material Galvanised Carbon Steel with rating of 150 and having design pressure (kg/cm2) and Design Temperature (C) of 12 and (-20) to 80 respectively.	1.0 Nos.
16	Admin building-2 AHU outlet valve of type Gate valve and Manual	1.0 Nos.

Sr. No.	Item Description	Quantity
	with flanged connection and having size DN 100 of material Galvanised Carbon Steel with rating of 150 and having design pressure (kg/cm2) and Design Temperature (C) of 12 and (-20) to 80 respectively.	
17	Admin building-3 AHU outlet valve of type Gate valve and Manual with flanged connection and having size DN 100 of material Galvanised Carbon Steel with rating of 150 and having design pressure (kg/cm2) and Design Temperature (C) of 12 and (-20) to 80 respectively.	1.0 Nos.
18	Auditorium AHU inlet valve of type Gate valve and Manual with flanged connection and having size DN 100 of material Galvanised Carbon Steel with rating of 150 and having design pressure (kg/cm2) and Design Temperature (C) of 12 and (-20) to 80 respectively.	1.0 Nos.
19	Auditorium AHU outlet valve of type Gate valve and Manual with flanged connection and having size DN 100 of material Galvanised Carbon Steel with rating of 150 and having design pressure (kg/cm2) and Design Temperature (C) of 12 and (-20) to 80 respectively.	1.0 Nos.
20	C-Block Engg.. AHU inlet valve of type Gate valve and Manual with flanged connection and having size DN 50 of material Galvanised Carbon Steel with rating of 150 and having design pressure (kg/cm2) and Design Temperature (C) of 12 and (-20) to 80 respectively.	1.0 Nos.
21	C-Block Engg.. AHU outlet valve of type Gate valve and Manual with flanged connection and having size DN 50 of material Galvanised Carbon Steel with rating of 150 and having design pressure (kg/cm2) and Design Temperature (C) of 12 and (-20) to 80 respectively.	1.0 Nos.
22	Helium pre-cooler inlet valve of type Gate valve and Manual with flanged connection and having size DN 25 of material Galvanised Carbon Steel with rating of 150 and having design pressure (kg/cm2) and Design Temperature (C) of 12 and (-20) to 80 respectively.	2.0 Nos.
23	Pump discharge Valve of type Check valve and Manual with flanged connection and having size DN 250 of material Galvanised Carbon Steel with rating of 150 and having design pressure (kg/cm2) and Design Temperature (C) of 12 and (-20) to 80 respectively.	2.0 Nos.
24	Helium after-cooler inlet valve of type Gate valve and Manual with flanged connection and having size DN 25 of material Galvanised Carbon Steel with rating of 150 and having design pressure (kg/cm2) and Design Temperature (C) of 12 and (-20) to 80	2.0 Nos.

Sr. No.	Item Description	Quantity
	respectively.	
25	Helium after-cooler outlet valve of type Gate valve and Manual with flanged connection and having size DN 25 of material Galvanised Carbon Steel with rating of 150 and having design pressure (kg/cm2) and Design Temperature (C) of 12 and (-20) to 80 respectively.	2.0 Nos.
26	Helium drying circuit cooler inlet valve of type Gate valve and Manual with flanged connection and having size DN 25 of material Galvanised Carbon Steel with rating of 150 and having design pressure (kg/cm2) and Design Temperature (C) of 12 and (-20) to 80 respectively.	1.0 Nos.
27	Helium drying circuit cooler outlet valve of type Gate valve and Manual with flanged connection and having size DN 25 of material Galvanised Carbon Steel with rating of 150 and having design pressure (kg/cm2) and Design Temperature (C) of 12 and (-20) to 80 respectively.	1.0 Nos.
28	Reactor Building AHU-1inlet valve of type Gate valve and Manual with flanged connection and having size DN 250 of material Galvanised Carbon Steel with rating of 150 and having design pressure (kg/cm2) and Design Temperature (C) of 12 and (-20) to 80 respectively.	2.0 Nos.
29	Reactor Building AHU-1outlet valve of type Gate valve and Manual with flanged connection and having size DN 250 of material Galvanised Carbon Steel with rating of 150 and having design pressure (kg/cm2) and Design Temperature (C) of 12 and (-20) to 80 respectively.	1.0 Nos.
30	Reactor Building AHU-2 inlet valve of type Gate valve and Manual with flanged connection and having size DN 250 of material Galvanised Carbon Steel with rating of 150 and having design pressure (kg/cm2) and Design Temperature (C) of 12 and (-20) to 80 respectively.	2.0 Nos.
31	Reactor Building AHU-2 outlet valve of type Gate valve and Manual with flanged connection and having size DN 250 of material Galvanised Carbon Steel with rating of 150 and having design pressure (kg/cm2) and Design Temperature (C) of 12 and (-20) to 80 respectively.	1.0 Nos.
32	Supplementary control room AHU inlet valve of type Gate valve and Manual with flanged connection and having size DN 100 of material Galvanised Carbon Steel with rating of 150 and having design pressure (kg/cm2) and Design Temperature (C) of 12 and (-20) to 80 respectively.	2.0 Nos.

Sr. No.	Item Description	Quantity
33	Supplementary control room AHU outlet valve of type Gate valve and Manual with flanged connection and having size DN 100 of material Galvanised Carbon Steel with rating of 150 and having design pressure (kg/cm2) and Design Temperature (C) of 12 and (-20) to 80 respectively.	2.0 Nos.
34	Main control room AHU inlet valve of type Gate valve and Manual with flanged connection and having size DN 150 of material Galvanised Carbon Steel with rating of 150 and having design pressure (kg/cm2) and Design Temperature (C) of 12 and (-20) to 80 respectively.	2.0 Nos.
35	Main control room AHU outlet valve of type Gate valve and Manual with flanged connection and having size DN 150 of material Galvanised Carbon Steel with rating of 150 and having design pressure (kg/cm2) and Design Temperature (C) of 12 and (-20) to 80 respectively.	2.0 Nos.
36	GT Lab and Filter House AHU inlet valve of type Gate valve and Manual with flanged connection and having size DN 100 of material Galvanised Carbon Steel with rating of 150 and having design pressure (kg/cm2) and Design Temperature (C) of 12 and (-20) to 80 respectively.	2.0 Nos.
37	GT Lab and Filter House AHU outlet valve of type Gate valve and Manual with flanged connection and having size DN 100 of material Galvanised Carbon Steel with rating of 150 and having design pressure (kg/cm2) and Design Temperature (C) of 12 and (-20) to 80 respectively.	2.0 Nos.
38	Helium system inlet valve of type Gate valve and Manual with flanged connection and having size DN 50 of material Galvanised Carbon Steel with rating of 150 and having design pressure (kg/cm2) and Design Temperature (C) of 12 and (-20) to 80 respectively.	1.0 Nos.
39	Helium system outlet valve of type Gate valve and Manual with flanged connection and having size DN 50 of material Galvanised Carbon Steel with rating of 150 and having design pressure (kg/cm2) and Design Temperature (C) of 12 and (-20) to 80 respectively.	1.0 Nos.
40	Admin building-1 AHU inlet valve of type PIBC valve and Control valve with Flanged/threaded connection and having size DN 100 of material brass with rating of 150 and having design pressure (kg/cm2) and Design Temperature (C) of 12 and (-20) to 80 respectively.	1.0 Nos.
41	Admin building-2 AHU inlet valve of type PIBC valve and Control valve with Flanged/threaded connection and having size DN 100 of	1.0 Nos.

Sr. No.	Item Description	Quantity
	material brass with rating of 150 and having design pressure (kg/cm2) and Design Temperature (C) of 12 and (-20) to 80 respectively.	
42	Admin building-3 AHU inlet valve of type PIBC valve and Control valve with Flanged/threaded connection and having size DN 100 of material brass with rating of 150 and having design pressure (kg/cm2) and Design Temperature (C) of 12 and (-20) to 80 respectively.	1.0 Nos.
43	Auditorium AHU inlet valve of type PIBC valve and Control valve with Flanged/threaded connection and having size DN 100 of material brass with rating of 150 and having design pressure (kg/cm2) and Design Temperature (C) of 12 and (-20) to 80 respectively.	1.0 Nos.
44	Fan Coil units of type PIBC valve and Control valve with Flanged/threaded connection and having size DN 50 of material brass with rating of 150 and having design pressure (kg/cm2) and Design Temperature (C) of 12 and (-20) to 80 respectively.	6.0 Nos.
45	Helium after-cooler inlet valve of type PIBC valve and Control valve with Flanged/threaded connection and having size DN 25 of material brass with rating of 150 and having design pressure (kg/cm2) and Design Temperature (C) of 12 and (-20) to 80 respectively.	1.0 Nos.
46	Helium drying circuit cooler inlet valve of type PIBC valve and Control valve with Flanged/threaded connection and having size DN 25 of material brass with rating of 150 and having design pressure (kg/cm2) and Design Temperature (C) of 12 and (-20) to 80 respectively.	1.0 Nos.
47	Reactor Building AHU-1inlet valve of type PIBC valve and Control valve with Flanged/threaded connection and having size DN 250 of material brass with rating of 150 and having design pressure (kg/cm2) and Design Temperature (C) of 12 and (-20) to 80 respectively.	1.0 Nos.
48	Supplementary control room AHU inlet valve of type PIBC valve and Control valve with Flanged/threaded connection and having size DN 100 of material brass with rating of 150 and having design pressure (kg/cm2) and Design Temperature (C) of 12 and (-20) to 80 respectively.	1.0 Nos.
49	Main control room AHU inlet valve of type PIBC valve and Control valve with Flanged/threaded connection and having size DN 150 of material brass with rating of 150 and having design pressure (kg/cm2) and Design Temperature (C) of 12 and (-20) to 80 respectively.	1.0 Nos.

Sr. No.	Item Description	Quantity
50	GT Lab and Filter House AHU inlet valve of type PIBC valve and Control valve with Flanged/threaded connection and having size DN 100 of material brass with rating of 150 and having design pressure (kg/cm2) and Design Temperature (C) of 12 and (-20) to 80 respectively.	1.0 Nos.
51	C-Block Engg. AHU inlet valve of type PIBC valve and Control valve with Flanged/threaded connection and having size DN 50 of material brass with rating of 150 and having design pressure (kg/cm2) and Design Temperature (C) of 12 and (-20) to 80 respectively.	1.0 Nos.
52	Helium pre-cooler inlet valve of type PIBC valve and Control valve with Flanged/threaded connection and having size DN 25 of material brass with rating of 150 and having design pressure (kg/cm2) and Design Temperature (C) of 12 and (-20) to 80 respectively.	1.0 Nos.
53	Seamless Pipe, DN 400 Sch. 40 having material Galvanised carbon Steel	50 m
54	Seamless Pipe, DN 300 Sch. 40 having material Galvanised carbon Steel	140 m
55	Seamless Pipe, DN 250 Sch. 40 having material Galvanised carbon Steel	300 m
56	Seamless Pipe, DN 150, Sch. 40 having material Galvanised carbon Steel	160 m
57	Seamless Pipe, DN 100, Sch. 40 having material Galvanised carbon Steel	50 m
58	Seamless Pipe, DN 50, Sch. 40 having material Galvanised carbon Steel	100 m
59	Seamless Pipe, DN 25, Sch. 40 having material Galvanised carbon Steel	30 m
60	Butt welded 900elbow, DN 400, Sch 40 having material Galvanised carbon Steel	2.0 Nos.
61	Butt welded 900elbow, DN 300, Sch 40 having material Galvanised carbon Steel	2.0 Nos.
62	Butt welded 900elbow, DN 250, Sch 40 having material Galvanised carbon Steel	6.0 Nos.
63	Butt welded 900elbow, DN 50, Sch 40 having material Galvanised carbon Steel	12.0 Nos.
64	Butt welded Tee DN 400x400, Sch 40 having material Galvanised carbon Steel	6.0 Nos.
65	Butt welded Tee DN 300x300, Sch 40 having material Galvanised carbon Steel	2.0 Nos.
66	Butt welded Unequal Tee DN 400x200, Sch 40 having material	8.0 Nos.

Sr. No.	Item Description	Quantity
	Galvanised carbon Steel	
67	Butt welded Unequal Tee DN 400x250, Sch 40 having material Galvanised carbon Steel	2.0 Nos.
68	Butt welded Unequal Tee DN 300x200, Sch 40 having material Galvanised carbon Steel	4.0 Nos.
69	Butt welded Unequal Tee DN 300x150, Sch 40 having material Galvanised carbon Steel	4.0 Nos.
70	Butt welded Reducer DN 400x300, Sch40 having material Galvanised carbon Steel	10.0 Nos.
71	Butt welded Reducer DN 400x200, Sch40 having material Galvanised carbon Steel	4.0 Nos.
72	Butt welded Reducer DN 150x50, Sch40 having material Galvanised carbon Steel	4.0 Nos.
73	WNRF, Class 150 Flange DN 400 having material Galvanised carbon Steel	12.0 Nos.
74	WNRF, Class 150 Flange DN 300 having material Galvanised carbon Steel	14.0 Nos.
75	WNRF, Class 150 Flange DN 250 having material Galvanised carbon Steel	32.0 Nos.
76	WNRF, Class 150 Flange DN 150 having material Galvanised carbon Steel	8.0 Nos.
77	WNRF, Class 150 Flange DN 100 having material Galvanised carbon Steel	16.0 Nos.
78	WNRF, Class 150 Flange DN 50 having material Galvanised carbon Steel	12.0 Nos.
79	WNRF, Class 150 Flange DN 25 having material Galvanised carbon Steel	20.0 Nos.
80	CW Pumps of type Centrifugal, horizontal, Drive motor: 3 phase induction motor with Flow: 5000 lpm, Head: 40 mWC, Motor Operating Voltage & Frequency: 415V, 50Hz, Motor synchronous speed: 1500 RPM, Required Shaft power: 55 kW	3.0 Nos.
81	CW Pump Suction Strainers of type Vertical mesh Basket type with Flow: 10000 lpm, Screen Size: 20 mesh, Allowable clean pressure drop: 1.5mWC	2.0 Nos.
	M6-S11: BOQ for Reverse Osmosis Plant	
1	RO Feed Pumps, Centrifugal, Horizontal suction & vertical discharge, Flow: 600 lpm, Head: 40 mWC, Voltage & Frequency: 415 V, 50 Hz, 3phase, Motor Synchronous speed: 1500 RPM, Motor power: 7.5 kW, with performance testing	2.0 Nos.
2	RO High Pressure Pump, Centrifugal, Multistage, Horizontal suction	2.0 Nos.

Sr. No.	Item Description	Quantity
	& vertical discharge, Flow: 600 lpm, Head: 150 mWC, Voltage & Frequency: 415 V, 50 Hz, 3phase, Motor Synchronous speed: 1500 RPM, Motor power: 30.0 kW with performance testing	
3	RO Product Water Pumps, Centrifugal, Horizontal suction & vertical discharge, Flow: 450 lpm, Head: 20 mWC, Voltage & Frequency: 415 V, 50 Hz, 3phase, Motor Synchronous speed: 1500 RPM, Motor power: 3.7 kW with performance testing	2.0 Nos.
4	RO Reject Water Pumps, Centrifugal, Horizontal suction & vertical discharge, Flow: 150 lpm, Head: 20 mWC, Voltage & Frequency: 415 V, 50 Hz, 3phase, Motor Synchronous speed: 1500 RPM, Motor power: 1.1 kW with performance testing	2.0 Nos.
5	RO PSF Backwash Pumps, Centrifugal, Horizontal suction & vertical discharge, Flow: 1000 lpm, Head: 20 mWC, Voltage & Frequency: 415 V, 50 Hz, 3phase, Motor Synchronous speed: 1500 RPM, Motor power: 7.5 kW with performance testing	2.0 Nos.
6	RO CIP Pumps, Centrifugal, Horizontal suction & vertical discharge, Flow: 10 m^3/hr, Head: 30 mWC, Voltage & Frequency: 415 V, 50 Hz, 3phase, Motor Synchronous speed: 1500 RPM, Motor power: 7.5 kW with performance testing	2.0 Nos.
7	Hypochlorite Dosing Pump, Electro metering Diaphragm Pump, 0-10 LPH at discharge pressure of 5.0 kg/cm^2, Voltage & Frequency: 415 V, 50 Hz, 3phase with performance testing	2.0 Nos.
8	SMBS Dosing Pump, Electro metering Diaphragm Pump, 0-10 LPH at discharge pressure of 5.0 kg/cm^2, Voltage & Frequency: 415 V, 50 Hz, 3phase with performance testing	2.0 Nos.
9	RCSB Main Sump Pumps, Centrifugal, Self-priming pump, Horizontal suction & vertical discharge, Flow: 250 lpm, Head: 20 mWC, Voltage & Frequency: 415 V, 50 Hz, 3phase, Motor Synchronous speed: 1500 RPM, Motor power: 2.2 kW with performance testing	2.0 Nos.
10	Pressure Sand Filter, Carbon Steel with rubber lining (CSRL) housing, Flow: 600 lpm, Clean pressure drop: 0.5 kg/cm^2, Diameter of housing: 2.0 m, Height of bed: 2.0 m with performance testing	2.0 Nos.
11	Cartridge Filters, Flow: 600 lpm, 5-micron rating depth filter cartridges with performance testing	2.0 Nos.
12	Cleaning Cartridge Filters, Flow: 10 m^3/hr, 5-micron rating depth filter cartridges with performance testing	2.0 Nos.
13	RO membrane module, GRP RO pressure tube, 8040 membrane elements, 4+2 arrangement of pressure tubes, Design pressure: 20 bar with performance testing	1.0 Nos.
14	Hypochlorite Solution Tank, 1 m^3 volume CSRL tank with motorised	2.0 Nos.

Sr. No.	Item Description	Quantity
	stirrer for chemical mixing with performance testing	
15	SMBS Solution Tank, 0.5 m^3 volume CSRL tank with motorised stirrer for chemical mixing with performance testing	2.0 Nos.
16	RO CIP Tank, 3.0 m^3 volume SS 316L tank with motorised stirrer for chemical mixing, Diameter: 2.0 m with performance testing	1.0 Nos.
17	Treated Water Tank, CSRL material, 10.0 m^3 volume, Diameter: 2.5 m	1.0 Nos.
18	Suck-back tank, 1.0 m^3 volume GRP tank, Diameter: 1.0 m	1.0 Nos.
19	Product Water Tank, CSRL material, 10.0 m^3 volume, Diameter: 3.0 m	1.0 Nos.
20	Reject Water Tank, CSRL material, 10.0 m^3 volume, Diameter: 3.0 m	1.0 Nos.
21	Air Compressor with performance testing	2.0 Nos.
22	Y type strainer, PVC material, 40 mesh	4.0 Nos.
23	Seamless Pipe, DN 100 Sch. 40 having material SS 316L	52 m
24	Seamless Pipe, DN 80 Sch. 40 having material SS 316L	20 m
25	Seamless Pipe, DN 65 Sch. 40 having material SS 316L	6 m
26	Seamless Pipe, DN 50 Sch. 40 having material SS 316L	6 m
27	Butt welded 90° elbow, DN 100, Sch. 40 having material SS 316L	34 Nos.
28	Butt welded 90° elbow, DN 80, Sch. 40 having material SS 316L	7 Nos.
29	Butt welded 90° elbow, DN 50, Sch. 40 having material SS 316L	7 Nos.
30	Butt welded Tee DN 100x100, Sch. 40 having material SS 316L	5 Nos.
31	Butt welded Tee DN 80x80, Sch. 40 having material SS 316L	4 Nos.
32	Butt welded Reducing Tee DN 100 x 50, Sch. 40 having material SS 316L	7 Nos.
33	Butt welded Reducing Tee DN 80 x 50, Sch. 40 having material SS 316L	6 Nos.
34	Butt welded Concentric reducer, DN 100 x 50, Sch. 40 having material SS 316L	8 Nos.
35	Butt welded Concentric reducer, DN 100 x 65, Sch. 40 having material SS 316L	6 Nos.
36	Butt welded concentric reducer, DN 100 x 80, Sch. 40 having material SS 316L	2 Nos.
37	Butt welded concentric reducer, DN 80 x 50, Sch. 40 having material SS 316L	3 Nos.
38	SORF, Class 150 Flange DN 100 having material SS 316L	38 Nos.
39	SORF, Class 150 Flange DN 80 having material SS 316L	5 Nos.
40	SORF, Class 150 Flange DN 65 having material SS 316L	6 Nos.

Sr. No.	Item Description	Quantity
41	SORF, Class 150 Flange DN 50 having material SS 316L	3 Nos.
42	Gate Valve, DN 100, Class 150, Flanged, having material SS 316L	6 Nos.
43	Check Valve, DN 100, Class 150, Flanged, having material SS 316L, with dashpot, limit switches	4 Nos.
44	Globe Valve, DN 100, Class 150, Flanged, having material SS 316L	4 Nos.
45	Diaphragm Valve, DN 15, Class 150, One end socket welded & other end NPT having material SS 316L	20.0 Nos.
46	Seamless Pipe, DN 100 Sch. 40 having material Galvanised Carbon Steel	145 m
47	Seamless Pipe, DN 80 Sch. 40 having material Galvanised Carbon Steel	140 m
48	Seamless Pipe, DN 50 Sch. 40 having material Galvanised Carbon Steel	160 m
49	Butt welded 90° elbow, DN 100, Sch. 40 having material Galvanised Carbon Steel	55 Nos.
50	Butt welded 90° elbow, DN 80, Sch. 40 having material Galvanised Carbon Steel	35 Nos.
51	Butt welded 90° elbow, DN 50, Sch. 40 having material Galvanised Carbon Steel	15 Nos.
52	Butt welded Tee DN 100x100, Sch. 40 having material Galvanised Carbon Steel	12 Nos.
53	Butt welded Tee DN 80x80, Sch. 40 having material Galvanised Carbon Steel	3 Nos.
54	Butt welded Reducing Tee, DN 150 x 80, Sch. 40 having material Galvanised Carbon Steel	2 Nos.
55	Butt welded concentric Reducer, DN 100 x 80, Sch. 40 having material Galvanised Carbon Steel	3 Nos.
56	Butt welded concentric Reducer, DN 100 x 50, Sch. 40 having material Galvanised Carbon Steel	4 Nos.
57	Butt welded concentric Reducer, DN 100 x 50, Sch. 40 having material Galvanised Carbon Steel	3 Nos.
58	SORF, Class 150 Flange DN 100 having material Galvanised Carbon Steel	60 Nos.
59	SORF, Class 150 Flange DN 80 having material Galvanised Carbon Steel	32 Nos.
60	SORF, Class 150 Flange DN 50 having material Galvanised Carbon Steel	16 Nos.
61	Gate Valve, DN 100, Class 150, Flanged, having material Carbon Steel	10 Nos.

Sr. No.	Item Description	Quantity
62	Gate Valve, DN 80, Class 150, Flanged, having material Carbon Steel	3 Nos.
63	Gate Valve, DN 50, Class 150, Flanged, having material Carbon Steel	3 Nos.
64	Check Valve, DN 100, Class 150, Flanged, having material Carbon Steel, with dashpot, limit switches	5 Nos.
65	Check Valve, DN 80, Class 150, Flanged, having material Carbon Steel, with limit switches	3 Nos.
66	Globe Valve, DN 100, Class 150, Flanged, having material Carbon Steel	5 Nos.
67	Globe Valve, DN 80, Class 150, Flanged, having material Carbon Steel	4 Nos.
68	Globe Valve, DN 50, Class 150, Flanged, having material Carbon Steel	2 Nos.
69	Diaphragm Valve, DN 15, Class 150, One end socket welded & other end NPT having material carbon steel	50.0 Nos.
70	PVC Pipe	30.0 m
71	DN25 Gate Valves of PVC material, Flanged	10.0 Nos.
72	DN25 Check Valves of PVC material, Flanged	4.0 Nos.
73	DN25 Diaphragm Valves of PVC material, Flanged	10.0 Nos.
74	DN15 Diaphragm Valves of PVC material, Flanged	10.0 Nos.
	M6-S12: BOQ for Flow Test Station	
1	Manual Gate Valve at Strainer Upstream of size DN150	1.0 Nos.
2	Manual Gate Valve at Strainer Downstream of size DN150	1.0 Nos.
3	Manual Gate Valve at Test Cylinder Inlet of size DN150	1.0 Nos.
4	Manual Gate Valve at Test Cylinder Outlet of size DN150	1.0 Nos.
5	Manual Gate Valve at Pump#1 Suction of size DN150	1.0 Nos.
6	Manual Gate Valve at Pump#2 Suction of size DN150	1.0 Nos.
7	Check Valve at Pump#1 Discharge of size DN150	1.0 Nos.
8	Check Valve at Pump#2 Discharge of size DN150	1.0 Nos.
9	Manual Globe Valve at Pump#1 Discharge of size DN150	1.0 Nos.
10	Manual Globe Valve at Pump#2 Discharge of size DN150	1.0 Nos.
11	Manual Globe Valve at Test Cylinder Outlet of size DN150	1.0 Nos.
12	Pneumatic Globe Valve at Flow control valve (FCV) of size DN150	1.0 Nos.
13	Manual Gate Valve at Flow element#1 Upstream of size DN150	1.0 Nos.
14	Manual Gate Valve at Flow element#2 Upstream of size DN100	1.0 Nos.
15	Manual Gate Valve at Flow element#1 Downstream of size DN150	1.0 Nos.
16	Manual Gate Valve at Flow element#2 Downstream of size DN100	1.0 Nos.

Sr. No.	Item Description	Quantity
17	Manual Gate Valve at Test Cylinder By-pass of size DN100	1.0 Nos.
18	Manual Globe Valve at Pump By-pass of size DN50	1.0 Nos.
19	Manual Gate Valve at Make-up valve of size DN25	1.0 Nos.
20	Manual Gate Valve at Test cylinder Vent Valve of size DN25	1.0 Nos.
21	Manual Gate Valve at Test cylinder Drain Valve of size DN25	1.0 Nos.
22	Manual Gate Valve at Strainer Vent Valve of size DN15	1.0 Nos.
23	Manual Gate Valve at Strainer Drain Valve of size DN15	1.0 Nos.
24	Manual Gate Valve at Pump#1 Vent Valve of size DN15	1.0 Nos.
25	Manual Gate Valve at Pump#1 Drain Valve of size DN15	1.0 Nos.
26	Manual Gate Valve at Pump#2 Vent Valve of size DN15	1.0 Nos.
27	Manual Gate Valve at Pump#2 Drain Valve of size DN15	1.0 Nos.
28	Manual Gate Valve at Spare Valve of size DN15	12.0 Nos.
29	Manual Gate Valve at Instrumentation root valve of size DN15	20.0 Nos.
30	Seamless Pipe, DN150, Sch. 40	60 m
31	Seamless Pipe, DN100, Sch. 40	30 m
32	Seamless Pipe, DN25, Sch. 40	10 m
33	Seamless Pipe, DN15, Sch. 40	10 m
34	Gate Valve, DN150	8.0 Nos.
35	Gate Valve, DN100	3.0 Nos.
36	Check Valve, DN100	2.0 Nos.
37	Globe Valve, DN150	3.0 Nos.
38	Globe Valve, DN50	1.0 Nos.
39	Gate Valve, DN25	3.0 Nos.
40	Gate Valve, DN15	38.0 Nos.
41	SORF, Class 150 Flange, DN150	30.0 Nos.
42	SORF, Class 150 Flange, DN100	30.0 Nos.
43	SORF, Class 150 Flange, DN25	16.0 Nos.
44	Butt Welded 90° Bend, DN150, Sch.40	16.0 Nos.
45	Butt Welded 90° Bend, DN100, Sch.40	10.0 Nos.
46	Butt Welded Equal Tee, DN150, Sch. 40	2.0 Nos.
47	Butt Welded Un-Equal Tee,150x100, Sch. 40	4.0 Nos.
48	Class 3000 Weldolet,150x25, Sch. 40	5.0 Nos.
49	Class 3000 Weldolet,150x15, Sch. 40	12.0 Nos.
50	Class 3000 Plug, DN15	10.0 Nos.
51	Class 3000 Threadolet, 150 x 15 Sch.40	4.0 Nos.
52	Hex Bolt & Nuts M20 Bolt with washer, nut & Locknut	80.0 Nos.

Sr. No.	Item Description	Quantity
53	Hex Bolt & Nuts M18 Bolt with washer, nut & Locknut	80.0 Nos.
54	Hex Bolt & Nuts M14 Bolt with washer, nut & locknut	80.0 Nos.
55	FTS Circulation pump and its drive motor: Centrifugal, horizontal mounted with mechanical seal, Drive motor: 3 phase induction motor, Flow: 2000 lpm, Head: 45 mWC, Motor Operating Voltage & Frequency: 415V, 50 Hz, Motor synchronous speed: 1500 RPM, Motor Rating: 30 kW, Electrical power supply: Class-IV	2.0 Nos.
56	FTS strainer: Vertical mesh basket type, Flow: 2000 lpm, Screen Size: 40 mesh, Allowable clean pressure drop: 1.5 mWC	2.0 Nos.
	M6-S13: BOQ for Diesel Oil Storage and Transfer System	
1	Fuel oil transfer pump	3.0 Nos.
2	Hand Pump	1.0 Nos.
3	The bulk storage tank (20000 litres) made of Carbon Steel ASTM A-516 Gr. 70, along with the saddle supporting structures, shall be provided as per the design requirements specified in this document	2.0 Nos.
4	The day tank (990 litres), fabricated from Carbon Steel ASTM A-516 Gr. 70, along with the saddle supporting structures, shall be provided in accordance with the design requirements specified in this document. The dimensions of the day tank (height, width, and depth) shall be as per the OEM recommendations of the DG set	3.0 Nos.
5	Strainers	3.0 Nos.
6	High Speed Diesel (HSD) Oil	45000 litres
7	DN40 Flanged Gate valve	12.0 Nos.
8	DN25 Flanged Gate valve	8.0 Nos.
9	DN25 Socket welded ball valve	14.0 Nos.
10	Pipes (Carbon steel, 40 NB)	500 m
11	Pipes (Carbon steel, 25 NB)	250 m
12	Magnetic Level Gauge for outside storage tank	2.0 Nos.
13	Level Switch	11.0 Nos.
14	Pressure Gauge (2 inch)	4.0 Nos.
	M7: Labs Workshops and Stores Module	
	M7-S1: BOQ for Mechanical Maintenance Workshop	
1	**High speed precision Lathe, of 2m bed length**	
1.1	High speed precision Lathe, (model NH22/2000) straight bed, A 2-6/53mm spindle nose, Gap Bed Along with std. Accessories, standard colour and full packing.	1 set
1.2	3 jaw self centering chuck diameter 250 mm with one set of hardened jaws reversible for internal and external chucking	1.0 Nos.
1.3	Universal face plate diameter 480 mm	1.0 Nos.

Sr. No.	Item Description	Quantity
1.4	4 Jaw Independent Chuck diameter 400 mm	1.0 Nos.
1.5	Swarf tray and coolant equipment assembly	1.0 Nos.
1.6	Splash guard	1.0 Nos.
1.7	Machine lamp 24 V without bulb.	1.0 Nos.
1.8	Steady rest 8 - 145 mm	1.0 Nos.
1.9	Follow rest 8 - 80 mm for NH 26 machine	1.0 Nos.
1.1	Rotating centre with MT5 shank.	1.0 Nos.
1.11	Longitudinal stop	1.0 Nos.
1.12	Stop roll	1.0 Nos.
1.13	Taper turning attachment	1.0 Nos.
1.14	Star delta Starter	1.0 Nos.
1.15	First fill of oil and Lubricant	1 set
1.16	Foundation bolts and levelling plates with adjusting bolts.	1 set
1.17	Special tool kit consisting of turning tools, parting tools, external threading tools with a set of corresponding inserts	1 set
1.18	Change Gear for DP Threads	1.0 Nos.
2	**High speed precision Lathe, of 3m bed length**	
2.1	High speed precision Lathe machine, (model NH32/3000) with Induction hardened /Ground straight bed, Gap bed version in lieu of standard bed, along with std. accessories, standard colour and full packing.	1 set
2.2	3 Jaw self-centering chuck diameter 250 mm with one set of hardened jaws reversible for internal and external chucking	1.0 Nos.
2.3	Universal face plate diameter 550 mm	1.0 Nos.
2.4	Swarf tray and coolant equipment assembly	1.0 Nos.
2.5	Splash guard	1.0 Nos.
2.6	Machine lamp 24 V without bulb	1.0 Nos.
2.7	Steady rest 135 - 250 mm	1.0 Nos.
2.8	Rotating centre with MT5 shank	1.0 Nos.
2.9	Special tool kit consisting of turning tools, parting tools, external threading tools with a set of corresponding inserts	1.0 Nos.
2.10	Longitudinal stop	1.0 Nos.
2.11	Stop roll	1.0 Nos.
2.12	Taper turning attachment	1.0 Nos.
2.13	Star delta Starter	1.0 Nos.
2.14	Follow rest 8 - 80 mm for NH 32 machine	1.0 Nos.
2.15	Foundation bolts and levelling plates with adjusting bolts	1 set

Sr. No.	Item Description	Quantity
2.16	First fill of oil and Lubricant and Coolant	1 set
3	**Radial Drilling Machine**	
3.1	Radial Drilling Machine (RM-65) with Standard accessories and standard colour. The Standard accessories shall include: Electrical equipment complete with wiring suitable for three phase, 415 volt, 50Hz, AC supply	1 set
3.2	Large Box Table (1000 X 750 × 500 mm)	2.0 Nos.
3.3	Universal Table (750 X 500 × 600 mm)	2.0 Nos.
3.4	Coolant Equipment	2.0 Nos.
3.5	Machine Lamp (220 volts) - without bulb	2.0 Nos.
3.6	Set of Foundation Bolts and Wedges (one set consists of six numbers)	2 sets
3.7	Reduction Sleeves (one set consists 4 sleeves: MT5/MT1, MT5/MT2, MT5/MT3, MT5/MT4)	2 sets
3.8	Tapping Attachment (M12 mm - M48 mm)	2.0 Nos.
3.9	Machine Vice with Swivel Base (diameter 200 mm)	2.0 Nos.
3.10	Univ. Machine Vice (diameter 160 mm)	2.0 Nos.
3.11	Self Centering Vice (diameter 10 - 80 mm)	2.0 Nos.
3.12	Drill Drift (one set consists of four numbers)	2 sets
3.13	Set of T - Bolts and Nuts (One set consists of four numbers)	2 sets
3.14	Drill Chuck - taper shank self-centring (diameter 5 - 20 mm)	2.0 Nos.
3.15	Set of drill Bits (Diameter 16mm one set consists of four numbers)	2 sets
3.16	Set of HSS Twist Drill Bits (one set consists 4 drill bits of diameter 20, 30, 40, 50 mm)	2 sets
3.17	Quick Indexing Dividing Head with Vertical Spindle with twelve notches and 3-Jaw Chuck diameter 160 mm	1 set
3.18	First fill of oil, Lubrication and Coolant	1.0 Nos.
4	**Knee Type Universal Milling Machine**	
4.1	Knee Type Universal Manual Milling Machine in standard apple green colour with standard accessories which shall include Electrical equipment complete with wiring suitable for 415Volts, 50 cycles, 3 phase, 4 wire, AC supply, Draw bolt	1 set
4.2	Set of service tools, Operation, Maintenance & Spare Parts manual	1.0 Nos.
4.3	Machine Vice Swivel Base 200 mm.	1.0 Nos.
4.4	Self Centering Vice 10-80 mm.	1.0 Nos.
4.5	Stub Arbors ISO 50, Diameter 40 X 27 / 63 mm	1.0 Nos.
4.6	Climb Milling Attachment	1.0 Nos.
4.7	Universal Dividing Head With Tailstock 180 mm, Supporting Block	1.0 Nos.

Sr. No.	Item Description	Quantity
	and Train of Gear	
4.8	Single Lever Hand Operated Vertical Indexing Head 12 Notches 3 Jaw Chuck Diameter 160 mm	1.0 Nos.
4.9	3 Jaw Chuck Diameter 195 mm /200 mm.	1.0 Nos.
4.10	Collet Holder ISO 50	1.0 Nos.
4.11	Conical Type Collets Diameter 5 to 20 mm (5, 6, 8, 10, 12, 16 and 20 mm)	1 set
4.12	Single Lever Hand Operated Vertical Indexing Head twenty four notches 3 Jaw Chuck diameter 160 mm	1.0 Nos.
4.13	Hand Operated Round Table Diameter 400 mm.	1.0 Nos.
4.14	Coolant Equipment	1.0 Nos.
4.15	Machine Lamp For 220 volts.	1.0 Nos.
4.16	Milling Arbors ISO 50, Diameter 32 × 800 mm	1.0 Nos.
4.17	Universal Milling Head	1.0 Nos.
4.18	Slotting attachment.	1.0 Nos.
4.19	Parking bracket to be used with items at Sr. No. 15 and 16 mentioned in specification sheet	1.0 Nos.
4.20	Foundation bolts and levelling plates	1 set
4.21	First Fill of Oil, Lubricant and Coolant	1 set
5	**Surface Grinding Machine**	
5.1	Precision surface grinding machine (model 455H) in standard apple green colour and standard accessories which shall include-	1 set
5.2	Electrical equipment for 400/440 V, 3 phases 50 Hz	1 set
5.3	Wheel flanges	1 set
5.4	Disc. Wheel 250 x 25 x 76.2 aa46	1.0 Nos.
5.5	Hand traverse unit assembly	1.0 Nos.
5.6	Disc wheel size 250 x 25 x 76.2 gc 60	1.0 Nos.
5.7	Wheel flange extractors nut & screw	1.0 Nos.
5.8	Tommy bar	1.0 Nos.
5.9	Wheel flange key	1.0 Nos.
5.10	Balancing mandrel	1.0 Nos.
5.11	Diamond holder for magnetic chuck	1.0 Nos.
5.12	Hook spanners	2.0 Nos.
5.13	Double ended spanner	1.0 Nos.
5.14	Allen keys 2, 2.5, 3, 4, 5, 6 & 8 mm	1 set
5.15	Telescopic covers	2.0 Nos.
5.16	Permanent Magnetic Chuck 600 X 300 mm	1.0 Nos.

Sr. No.	Item Description	Quantity
5.17	Cross Saddle Lock	1.0 Nos.
5.18	Built in Wheel truing attachment, Head mounted including diamond	1.0 Nos.
5.19	Diamond holder and Diamond one (1) Set for magnetic chuck	1.0 Nos.
5.20	Dust Exhaust equipment	1.0 Nos.
5.21	Electric Pump and coolant fitting with Magnetic Separator	1.0 Nos.
5.22	Precision sine vice width of jaws 100 mm.	1.0 Nos.
5.23	Universal 3-way swivelling vice admits work 65mm	1.0 Nos.
5.24	Radius and Angular wheel forming attachment including diamond 645-10/RAD-40	1.0 Nos.
5.25	Precision Static Wheel Balancing Unit	1.0 Nos.
5.26	DRO for vertical and cross movement	1.0 Nos.
5.27	Magnetic Sine Table SPM-510	1.0 Nos.
5.28	Electro Magnetic Chuck with D.C. Variable unit and with Magnetic and Demagnetise switch	1.0 Nos.
5.29	Foundation bolts and levelling plates	1 set
5.30	First Fill of Oil, Lubricant and Coolant	1 set
5.31	Cross Feed Screw and Nut (Ball Screws)	2 sets
5.32	Spindle Nut	4.0 Nos.
5.33	Spindle lock nut	2.0 Nos.
5.34	Metallistic Mountings 451 5C 05	8.0 Nos.
5.35	Exhaust hose	2.0 Nos.
5.36	Feed Hose	2.0 Nos.
5.37	Knob and Knob stud	4.0 Nos.
5.38	Feed Link	2.0 Nos.
6	**Hydraulic Power Hacksaw Machine**	
6.1	Supply and guarantee of Hydraulic Power Hacksaw Machine with the following accessories: a) Adjustable Bar rest b) Machine lamp V-jaws for clamping materials (Model: QMT-12) as per details given in technical specification.	1.0 Nos.
6.2	HSS Hard blades for above Hydraulic Power Hacksaw Machine with size 540 mm × 40 mm ×2mm with 10 TPI.	10.0 Nos.
6.3	HSS Hard blades for above Hydraulic Power Hacksaw Machine with size 540 mm × 45mm × 2mm with 6 TPI.	5.0 Nos.
7	**Shaping Machine**	
7.1	Supply and guarantee of Shaping Machine with standard accessories as per Specification.	1 set

Sr. No.	Item Description	Quantity
7.2	Crank Handle of above Shaping Machine	1.0 Nos.
7.3	Automatic tool slide of above Shaping Machine	1.0 Nos.
7.4	Auto tool lifting leather apron of above Shaping Machine	1.0 Nos.
7.5	Key way cutting attachment of above Shaping Machine	1.0 Nos.
7.6	Hydraulic Press 50T Capacity along with necessary accessories recommended by manufacturer.	1 set
8	**Double Ended Pedestal Grinder**	
8.1	Double Ended Pedestal Grinder and its necessary accessories	1 set
8.2	Spare Grinding Wheels as mentioned at Sr. No 22 of Specification Sheet	1 set
8.3	Bench Grinder of 200 mm size along with mounting frame, necessary accessories and anchor fasteners	3 sets
8.4	Grinding wheels set for above Bench Grinder as explained at Sr. No. 2 of specification sheet.	6 sets
8.5	Light duty Angle grinder 100 mm disc diameter size	10.0 Nos.
8.6	Bench Drilling Machine and manufacturers recommended accessories for 5years of trouble free operation	2 sets
8.7	Two speed Magnetic drill machine; capable to drill hole up to 50 mm dia & at least 50 mm length in steel.	2.0 Nos.
9	**CNC Vertical Milling Machine**	
9.1	Supply Instillation and hands-on training of CNC Vertical Milling Machine with accessories mentioned in specification sheet.	1 set
9.2	Fully enclosed splash guard with sight window, fully encapsulated housing with safety type window.	1 set
9.3	Chip Collection Tray to be provided	1.0 Nos.
9.4	Levelling pads	1 set
9.5	Manual Pulse Generator (MPG)	1.0 Nos.
9.6	Work-piece washing gun.	1.0 Nos.
9.7	Pull stud	10.0 Nos.
9.8	Drill Chucks, Vice for Job holding, Morse taper adaptors covering entire range and Carbide tipped drill bits covering entire range specified above.	1 set
9.9	Milling cutters, one set of Tool holders, Adapters, Collect Chuck Adapters, Collets etc.	1 set
10	**Milling Cutters**	
10.1	Face milling cutter of 50 mm diameter for 16 edge insert with positive clearance angle	2.0 Nos.
10.2	Face milling cutter of 100 mm diameter for 16 edge insert with	2.0 Nos.

Sr. No.	Item Description	Quantity
	positive clearance angle	
10.3	16 edge insert with positive clearance angle for face milling of steel	20.0 Nos.
10.4	16 edge insert with positive clearance angle for face milling of heat resistance material	20.0 Nos.
10.5	Shoulder and face milling cutter of 50 mm dia. for 8 edge 90 degree insert with H tolerance	2.0 Nos.
10.6	Shoulder and face milling cutter of 100 mm dia. for 8 edge 90 degree insert with H tolerance	2.0 Nos.
10.7	Insert having 8 edge 90 degree with H tolerance for shoulder and face milling of steel	20.0 Nos.
10.8	Insert having 8 edge 90 degree with H tolerance for shoulder and face milling of stainless steel	20.0 Nos.
10.9	Helical plunging cutter of 63mm dia. with 2 edge insert	2.0 Nos.
10.10	Helical plunging cutter of 32mm dia. with 2 edge insert	2.0 Nos.
10.11	Helical plunging cutter of 25mm dia. with 2 edge insert	2.0 Nos.
10.12	Insert with edge length 15mm for Helical plunging of steel	20.0 Nos.
10.13	Insert with edge length 15mm for Helical plunging of Aluminium	20.0 Nos.
10.14	Insert with edge length 15mm for Helical plunging of stainless steel	20.0 Nos.
10.15	Insert with edge length 15mm for Helical plunging of heat resistance material	20.0 Nos.
11	**Morse Tapper Pipe Centre Tools**	
11.1	Morse Tapper Standard Live Centre. Size: MT No. 3.	4.0 Nos.
11.2	Morse Tapper Spare Point for Revolving Centre. Size: MT No. 1. Material - Carbide.	5.0 Nos.
11.3	Morse Tapper Spare Point for Revolving Centre. Size: MT No. 2. Material - Carbide.	5.0 Nos.
11.4	Morse Tapper Spare Point for Revolving Centre. Size: MT No. 3. Material - Carbide	5.0 Nos.
11.5	Morse Tapper Spare Point for Revolving Centre. Size: MT No.4. Material - Carbide	5.0 Nos.
11.6	Morse Tapper Spare Point for Revolving Centre. Size: MT No.5	2.0 Nos.
11.7	Morse Tapper Pipe Centre. Size: MT No.2. Size - 0-2".	6.0 Nos.
11.8	Morse Tapper Pipe Centre. Size: MT No.3. Size - 0-2".	6.0 Nos.
11.9	Morse Tapper Pipe Centre. Size: MT No.4. Size - 0-2"	6.0 Nos.
11.10	Morse Tapper Pipe Centre. Size: MT No.5. Size - 0-2"	4.0 Nos.
11.11	Morse Tapper Pipe Centre. Size: MT No.2. Size - 0-3"	5.0 Nos.
11.12	Morse Tapper Pipe Centre. Size: MT No.3. Size - 0-3"	5.0 Nos.
11.13	Morse Tapper Pipe Centre. Size: MT No.4. Size - 0-3"	4.0 Nos.

Sr. No.	Item Description	Quantity
11.14	Morse Tapper Pipe Centre. Size: MT No.5. Size - 0-3"	2.0 Nos.
11.15	Morse Tapper Pipe Centre. Size: MT No.3. Size - 0-4"	2.0 Nos.
11.16	Morse Tapper Pipe Centre. Size: MT No.4. Size - 0-4".	2.0 Nos.
11.17	Morse Tapper Pipe Centre. Size: MT No.5. Size - 0-4".	2.0 Nos.
11.18	Morse Tapper Arbour for Drill Chuck as per IS 9097 (i) - 1979 Size: MT-3. Size - 3/8".	4.0 Nos.
13	**Shank Tools & Inserts**	
13.1	Shank tool for parting off insert up to 40 mm dia. with module	3.0 Nos.
13.2	Module for parting off up to 40 mm dia.	3.0 Nos.
13.3	Single edge insert for parting off up to 40 mm dia.	30.0 Nos.
13.4	Shank tool for parting off insert up to 60 mm dia. with module	3.0 Nos.
13.5	Module for parting off up to 60 mm dia.	3.0 Nos.
13.6	Single edge insert for parting off up to 60 mm dia.	30.0 Nos.
13.7	Shank tool for parting off insert up to 90 mm dia. with module	3.0 Nos.
13.8	Module for parting off up to 90 mm dia.	3.0 Nos.
13.9	Single edge insert for parting off up to 90 mm dia.	10.0 Nos.
14	**Insert holder, Insert and Boring bars**	
14.1	Insert holder with 20 mm x 20 mm left hand shank having 80º included angle	3.0 Nos.
14.2	Insert holder with 20 mm x 20 mm right hand shank having 80º included angle	3.0 Nos.
14.3	Insert holder with 25mmx25mm left hand shank having 80º included angle	3.0 Nos.
14.4	Insert holder with 25mmx25mm right hand shank having 80º included angle	3.0 Nos.
14.5	Insert for steel with nose radius0.8mm and 80º included angle	30.0 Nos.
14.6	Insert for stainless steel with nose radius 0.8mm and 80º included angle	30.0 Nos.
14.7	Insert for Aluminium with nose radius 0.4mm and 80º included angle	30.0 Nos.
14.8	Insert for Aluminium with nose radius 0.8mm and 80º included angle	30.0 Nos.
14.9	Insert for heat resistance material with nose radius 0.4mm and 80º included angle	30.0 Nos.
14.10	Insert for heat resistance material with nose radius 0.8mm and 80º included angle	30.0 Nos.
14.11	Insert for steel material with nose radius 0.4mm & 80º included angle	30.0 Nos.
14.12	Insert for SS material with nose radius 0.4mm & 80º included angle	30.0 Nos.
14.13	Insert holder with 20 mmx20 mm left hand shank having 35º	3.0 Nos.

Sr. No.	Item Description	Quantity
	included angle	
14.14	Insert holder with 20 mmx20 mm right hand shank having 35º included angle	3.0 Nos.
14.15	Insert holder with 25mmx25mm left hand shank having 35º included angle	3.0 Nos.
14.16	Insert holder with 25mmx25mm right hand shank having 35º included angle	3.0 Nos.
14.17	Insert for steel material with nose radius 0.4mm & 35º included angle	30.0 Nos.
14.18	Insert for SS material with nose radius 0.4mm & 35º included angle	30.0 Nos.
14.19	Insert for stainless steel material with nose radius 0.8mm & 35º included angle	30.0 Nos.
14.20	Insert for steel material with nose radius 0.8mm & 35º included angle	30.0 Nos.
14.21	Boring bar of 8mm dia. for 80º included angle positive insert with6mm edge length left hand	3.0 Nos.
14.22	Boring bar of 8mm dia. for 80º included angle positive insert with6mm edge length right hand	3.0 Nos.
14.23	Boring bar of 16mm dia. for 80º included angle positive insert with6mm edge length left hand	3.0 Nos.
14.24	Boring bar of 16mm dia. for 80º included angle positive insert with6mm edge length right hand	3.0 Nos.
14.25	Positive insert for steel with 80º included angle, 6mm edge length & nose radius 0.4mm	30.0 Nos.
14.26	Positive insert for aluminium with80º included angle, 6mm edge length & nose radius 0.4mm	30.0 Nos.
14.27	Positive insert for steel with 80º included angle, 6mm edge length & nose radius 0.8mm	30.0 Nos.
14.28	Boring bar of 12mm dia. for 60º included angle positive insert with11mm edge length right hand	3.0 Nos.
14.29	Boring bar of 12mm dia. for 60º included angle positive insert with11mm edge length left hand	3.0 Nos.
14.30	Boring bar of 20 mm dia. for 60º included angle positive insert with11mm edge length left hand	3.0 Nos.
14.31	Boring bar of 20 mm dia. for 60º included angle positive insert with 11mm edge length right hand	3.0 Nos.
14.32	Positive insert for steel with 11mm edge length, nose radius 0.4mm &60º included angle	30.0 Nos.
14.33	Positive insert for Aluminium with11mm edge length, nose	30.0 Nos.

Sr. No.	Item Description	Quantity
	radius0.4mm & 60º included angle	
15	**Solid Carbide Drills**	
15.1	Solid carbide drill for machining of steel having diameter 5mm, Length to diameter ratio 3 with positive geometry	2.0 Nos.
15.2	Solid carbide drill for machining of steel having diameter 5.5mm, Length to diameter ratio 3 with positive geometry.	2.0 Nos.
15.3	Solid carbide drill for machining of steel having diameter 6mm, Length to diameter ratio 3 with positive geometry.	2.0 Nos.
15.4	Solid carbide drill for machining of steel having diameter 6.5mm, Length to diameter ratio 3 with positive geometry.	2.0 Nos.
15.5	Solid carbide drill for machining of steel having diameter 7mm, Length to diameter ratio 3 with positive geometry.	2.0 Nos.
15.6	Solid carbide drill for machining of steel having diameter 7.5mm, Length to diameter ratio 3 with positive geometry.	2.0 Nos.
15.7	Solid carbide drill for machining of steel having diameter 8mm, Length to diameter ratio 3 with positive geometry.	2.0 Nos.
15.8	Solid carbide drill for machining of steel having diameter 8.5mm, Length to diameter ratio 3 with positive geometry.	2.0 Nos.
15.9	Solid carbide drill for machining of steel having diameter 9mm, Length to diameter ratio 3 with positive geometry.	2.0 Nos.
15.10	Solid carbide drill for machining of steel having diameter 9.5mm, Length to diameter ratio 3 with positive geometry.	2.0 Nos.
15.11	Solid carbide drill for machining of steel having diameter 10 mm, Length to diameter ratio 3 with positive geometry.	2.0 Nos.
15.12	Solid carbide drill for machining of steel having diameter 10.5mm, Length to diameter ratio 3 with positive geometry.	2.0 Nos.
15.13	Solid carbide drill for machining of steel having diameter 11mm, Length to diameter ratio 3 with positive geometry.	2.0 Nos.
15.14	Solid carbide drill for machining of steel having diameter 11.5mm, Length to diameter ratio 3 with positive geometry.	2.0 Nos.
15.15	Solid carbide drill for machining of steel having diameter 12mm, Length to diameter ratio 3 with positive geometry.	2.0 Nos.
15.16	Solid carbide drill for machining of steel having diameter 12.5mm, Length to diameter ratio 3 with positive geometry.	2.0 Nos.
15.17	Solid carbide drill for machining of steel having diameter 13mm, Length to diameter ratio 3 with positive geometry.	2.0 Nos.
15.18	Solid carbide drill for machining of steel having diameter 13.5mm, Length to diameter ratio 3 with positive geometry.	2.0 Nos.
15.19	Solid carbide drill for machining of steel having diameter 14mm,	2.0 Nos.

Sr. No.	Item Description	Quantity
	Length to diameter ratio 3 with positive geometry.	
15.20	Solid carbide drill for machining of steel having diameter 14.5mm, Length to diameter ratio 3 with positive geometry.	2.0 Nos.
15.21	Solid carbide drill for machining of steel having diameter 15mm, Length to diameter ratio 3 with positive geometry.	2.0 Nos.
15.22	Solid carbide drill for machining of steel having diameter 15.5mm, Length to diameter ratio 3 with positive geometry.	2.0 Nos.
15.23	Solid carbide drill for machining of steel having diameter 16mm, Length to diameter ratio 3 with positive geometry.	2.0 Nos.
15.24	Solid carbide drill for machining of steel having diameter 16.5mm, Length to diameter ratio 3 with positive geometry.	2.0 Nos.
15.25	Solid carbide drill for machining of steel having diameter 17mm, Length to diameter ratio 3 with positive geometry.	2.0 Nos.
15.26	Solid carbide drill for machining of steel having diameter 17.5mm, Length to diameter ratio 3 with positive geometry.	2.0 Nos.
15.27	Solid carbide drill for machining of steel having diameter 18mm, Length to diameter ratio 3 with positive geometry.	2.0 Nos.
15.28	Solid carbide drill for machining of steel having diameter 18.5mm, Length to diameter ratio 3 with positive geometry.	2.0 Nos.
15.29	Solid carbide drill for machining of steel having diameter 19mm, Length to diameter ratio 3 with positive geometry.	2.0 Nos.
15.30	Solid carbide drill for machining of steel having diameter 19.5mm, Length to diameter ratio 3 with positive geometry.	2.0 Nos.
15.31	Solid carbide drill for machining of steel having diameter 20 mm, Length to diameter ratio 3 with positive geometry.	2.0 Nos.
16	**Workshop Welding and Cutting Machines**	
16.1	Portable Single phase welding Machine	4.0 Nos.
16.2	SMAW/ TIG Invertor based Welding Machine	2.0 Nos.
16.3	Three phase Plasma cutting Machine	1.0 Nos.
16.4	Portable Welding Electrode Drying Oven	6.0 Nos.
16.5	Heavy duty Welding Electrode Drying Oven	2.0 Nos.
17	**Forming/Cutting Machines**	
17.1	Hydraulic Pipe bending machine along with necessary spares	1 set
18	**Nibbler machine with accessories.**	
18.1	Nibbler machine	1.0 Nos.
18.2	Die 10 mm thick sheet	2.0 Nos.
18.3	Die 7mm thick sheet	2.0 Nos.
18.4	Die 5mm thick sheet	2.0 Nos.

Sr. No.	Item Description	Quantity
18.5	Punch	2.0 Nos.
18.6	Punch guide	1.0 Nos.
18.7	Wearing plate	1.0 Nos.
18.8	Punching & nibbling oil	500 mL
18.9	Bracket/ Hanging Hook	2.0 Nos.
18.10	Chip bag	1.0 Nos.
18.11	Greasing tube	1.0 Nos.
18.12	Setting gauge	1.0 Nos.
18.13	Wrench	1.0 Nos.
18.14	Industrial Welding Table as per the specification, having Length 2000 mm, Width 1500 mm and Height 1000 mm	2.0 Nos.
19	**Workshop Material Handling Equipment**	
19.1	Diesel Operated Forklift having 5tons load capacity at 600 mm load centre as per Specification.	1.0 Nos.
19.2	Battery Operated Forklift of 3000kg load capacity at 500 mm load centre as per Specification & Compliance sheet.	2.0 Nos.
19.3	Battery operated Platform Truck with side flap of 2ton capacity	2.0 Nos.
19.4	HYDRA 14 Ton Heavy Duty Crane	1.0 Nos.
20	**Portable Jib Crane**	
20.1	One (1) Ton capacity Portable Jib Crane	1.0 Nos.
20.2	Spare Wheels (front & rear) - one set	1 set
20.3	Spare Wheel guide- one set	1 set
20.4	Spare Seal kit - one set	1 set
21	**Hand Pallet Tuck with accessories**	
21.1	Supply of Hydraulic Hand pallet tuck having safe weight load capacity 2500kg as per the specification (Model: AC 25)	6.0 Nos.
21.2	Spare: Seals kit of Hydraulic Pump with all elastomers / Oil seals for Hand Pallet Truck (Hydraulic Operated) of item No.1.	3.0 Nos.
21.3	Spare: Steering Wheels for Hand Pallet Truck (Hydraulic Operated).	10.0 Nos.
21.4	Spare: Load Wheels for Hand Pallet Truck (Hydraulic Operated).	20.0 Nos.
22	**Lifting Jacks**	
22.1	Flat Jack (10 MT lifting capacity) 5 Nos. along with one Hand pump unit having Hand pump, Pressure gauge & adapter, Hydraulic Hose and power box as per specification sheet mentioned in Submodule-S1 of Module-M7, Section-C2 [Note: 1 Set consist of 5 jacks and one Hand pump Unit.]	1 set
22.2	Low Height Jacks (10 MT lifting capacity) 4Nos. along with one Hand pump unit having Hand pump, Pressure gauge & adapter,	1 set

Sr. No.	Item Description	Quantity
	Hydraulic Hose and power box as per specification sheet mentioned in Submodule-S1 of Module-M7, Section-C2 [Note: 1 Set consist of 4 jacks and one Hand pump Unit.]	
22.3	General Purpose Jacks (10 MT capacity) 4 Nos. along with one Hand pump unit having Hand pump, Pressure gauge & adapter, Hydraulic Hose and power box as per specification sheet mentioned in Submodule-S1 of Module-M7, Section-C2 [Note: 1 Set consist of 4 jacks and one Hand pump unit].	2 sets
22.4	Flat Jack (20 MT capacity) 4 Nos. along with one Multi speed Hand pump unit having Hand pump, Pressure gauge & adapter, Hydraulic Hose and power box as per specification sheet mentioned in Submodule-S1 of Module-M7, Section-C2 [Note: 1 Set consist of 4 jacks and one Multi speed Hand pump unit].	1 set
22.5	Low Height Jacks (40-50 MT capacity) 4 Nos. as per specification, along with one Multi speed Hand pump unit having Hand pump, Pressure gauge & adapter, Hydraulic Hose and power box as per specification sheet mentioned in Submodule-S1 of Module-M7, Section-C2 [Note: 1 Set consist of 4 jacks and one multi speed Hand pump unit].	1 set
22.6	Aluminium Jack (20 MT capacity) 4 Nos. along with one Multi speed Hand pump unit having Hand pump, Pressure gauge & adapter, Hydraulic Hose and power box as per specification sheet mentioned in Submodule-S1 of Module-M7, Section-C2 [Note: 1 Set consist of 4 jack and one multi speed Hand pump unit].	1 set
23	**Cater roller load skate sets**	
23.1	30T capacity Cater roller load skate; 1 Set includes 6 Cater rollers	1 set
23.2	15T capacity Cater roller load skate; 1 Set includes 6 Cater rollers	1 set
24	**Chain Pulley Blocks**	
24.1	Light weight Hand operated chain pulley block of 1 ton rated capacity	5.0 Nos.
24.2	Light weight Hand operated chain pulley block of 2 ton rated capacity	5.0 Nos.
24.3	Light weight Hand operated chain pulley block of 5 ton rated capacity	2.0 Nos.
24.4	Light weight Hand operated chain pulley block of 10 ton rated capacity	2.0 Nos.
25	**Two Path Fiber Slings**	
25.1	Two Path fibre Yarn slings having both end eye, working load - 1 Ton, Length - 3 meters, width not more than 75mm, eye loop size-15"-18" as per specifications sheet	10.0 Nos.

Sr. No.	Item Description	Quantity
25.2	Two Path fibre Yarn slings having both end eye, working load - 1 Ton, length- 6 meters, width not more than 75mm, eye loop size- 15"-18" as per specifications sheet	10.0 Nos.
25.3	Two Path fibre Yarn slings having both end eye, working load - 2 Ton, length- 3 meters, width not more than 75mm, eye loop size- 15"-18" as per Specifications sheet	10.0 Nos.
25.4	Two Path fibre Yarn slings having both end eye, working load - 2 Ton, length- 6 meters, width not more than 75mm, eye loop size- 15"-18" as per Specifications sheet	10.0 Nos.
25.5	Two Path fibre Yarn slings having both end eye, working load- 5 Ton, length- 3 meters, width not more than 125mm, eye loop size- 20"-22" as per Specifications sheet	10.0 Nos.
25.6	Two Path fibre Yarn slings having both end eye, working load - 5 Ton, length- 6 meters, width not more than 125mm. eye loop size- 20"-22 as per Specifications sheet	10.0 Nos.
25.7	Two Path fibre Yarn slings having both end eye, working load - 10 Ton, length- 3 meters, width not more than 150 mm, eye loop size- 22"-25" as per Specifications sheet.	10.0 Nos.
26	**Eye Bolts of Varying Sizes**	
26.1	Eye Bolts M 6X13 for 200 kg load	10.0 Nos.
26.2	Eye Bolts M 8X13 for 400 kg load	10.0 Nos.
26.3	Eye Bolts M10X17 for 600 kg load	10.0 Nos.
26.4	Eye Bolts M12X20.5 for 1000 kg load	10.0 Nos.
26.5	Eye Bolts M16X27 for 1500 kg load	12.0 Nos.
26.6	Eye Bolts M 20X30 for 2500 kg load	12.0 Nos.
26.7	Eye Bolts M 24X36 for 4000 kg load	10.0 Nos.
26.8	Eye Bolts M27X69.8 for 5000 kg load	4.0 Nos.
26.9	Eye Bolts M 30X45 for 6000 kg load	4.0 Nos.
26.10	Eye Bolts M 36X54 for 8000 kg load	4.0 Nos.
27	**Turn Buckle of Varying Sizes**	
27.1	1 to 1.5 Ton & take up length 150 to 200 mm	2.0 Nos.
27.2	1 to 1.5 Ton & take up length 300 to 400 mm	2.0 Nos.
27.3	2 to 2.5 Ton & take up length 150 to 200 mm	2.0 Nos.
27.4	2 to 2.5 Ton & take up length 300 to 400 mm	2.0 Nos.
27.5	4.5 to 5 Ton & take up length 150 to 200 mm	2.0 Nos.
27.6	4.5 to 5 Ton & take up length 300 to 400 mm	2.0 Nos.
28	**Bow Shackle of Varying Sizes**	
28.1	Bow Shackle for 500kg load	20.0 Nos.

Sr. No.	Item Description	Quantity
28.2	Bow Shackle for 1000kg load	20.0 Nos.
28.3	Bow Shackle for 2000kg load	20.0 Nos.
28.4	Bow Shackle for 4000kg load	20.0 Nos.
28.5	Bow Shackle for 5000kg load	20.0 Nos.
28.6	Bow Shackle for 8000kg load	10.0 Nos.
28.7	Bow Shackle for 10000kg load	6.0 Nos.
28.8	Bow Shackle for 15000kg load	6.0 Nos.
29	**Bench Vice**	
29.1	Bench Vice of 100 mm capacity as per specification sheet	10.0 Nos.
29.2	Bench Vice of 150 mm capacity as per specification sheet	10.0 Nos.
30	**Mechanical puller**	
30.1	Mechanical Two Jaw Puller 1500kg capacity	3 sets
30.2	Mechanical Two Jaw Puller of 5000 kg capacity	2 sets
30.3	Mechanical Three Jaw Puller of 7500 kg capacity	2 sets
31	**Alignment Kits**	
31.1	Alignment kit 'Rim and Face' method	2 sets
31.2	Alignment kit 'Rim and Rim' method	2 sets
31.3	Bar type Master Interchangeable Puller set consisting of Gear puller, Bolt grip Puller, Rear Axle Puller, Bearing Puller, Bearing Spreader and interchangeable puller set in tool control board and locking wall Storage Cabinet. As per the specification	1 set
32	**Belt Pulley Alignment Set**	
32.1	Belt-pulley alignment tool with digital display "FAG". - LASER.SMARTY2 with LASER.SMARTY TARGET DIGITAL. Detailed as per given specification	1.0 Nos.
32.2	Portable Induction Bearing Heater as per the specification sheet	2.0 Nos.
33	**Tool Box with Spanners/Tools**	
33.1	Double end open end wrench, 36 x 41mm, of Length 350 mm and weight 900gms.	2.0 Nos.
33.2	Double end Ring wrench, 36 x 41mm, of Length 450 mm and weight 1200gms.	2.0 Nos.
33.3	Screwdriver Flat tip, Tip size shall be 8-9mm, blade length 200-250 mm overall length 300-350 mm.	20.0 Nos.
33.4	Screwdriver Flat tip, Tip size shall be 6-7mm, blade length 100-150 mm overall length 200-250 mm.	20.0 Nos.
33.5	Screwdriver Phillips, Tip size shall be PH3, blade length 150-200 mm overall length 300-350 mm	20.0 Nos.
33.6	Screwdriver Phillips, Tip size shall be PH2, blade length 100-125mm	20.0 Nos.

Sr. No.	Item Description	Quantity
	overall length 200-250 mm	
33.7	1/2" drive Quick Release Ratchet, Ratchet Length 250 mm Head thickness less than 20 mm.	20.0 Nos.
33.8	1/2" drive socket set, one set consist of spanner for bolt head across flat length 8, 9, 10, 11, 12, 13, 14, 15, 16, 17, 18, 19, 20, 21, 22, 23, 24, 25, 26, 27, 28, 29, 30, 32 and 34mm.	20.0 Nos.
33.9	1/2" drive Extension set, One set consist one each of 50-75 mm, 100-150 mm & 200-250 mm long extension.	20.0 Nos.
33.10	Soft Face Hammer, Head width and length 30-40 mm & 100-150 mm respectively	20.0 Nos.
33.11	Plier Set, One set consist of 4 pieces of Diagonal cutter, Long Nose Pliers, Combination Pliers and Adjustable Joint Pliers. The length of Diagonal cutter, Long, Nose Plier & Combination Plier is 200 mm and Adjustable Joint Pliers is 250 mm.	20.0 Nos.
33.12	Retaining Ring Plier set (Circlip Plier), One set Consist One Internal & One External Plier, Plier length shall be 150-200 mm	20 sets
33.13	Utility Knife, Blade length 50 to 100 mm and total length with handle shall be 200 to 300 mm.	20.0 Nos.
33.14	Feeler gauge, with at least 25 Blades with size 12mm x 75mm.	20.0 Nos.
33.15	Technician Tool Box, of 22 gauge or better sheet, with, 5 trays internal Dimension: W x D x H: 450-500 mm x 200-250 mm x 200-250 mm	20.0 Nos.
34	**Hammers with Handles**	
34.1	Single piece forged claw hammers; weight 750 ±50gm	10.0 Nos.
34.2	Fibreglass shafted claw hammers; weight 850 ±50gm	10.0 Nos.
34.3	Single piece forged club hammer; weight 500 ±50gm	10.0 Nos.
34.4	Steel claw hammer; Weight 800 ±50gm	10.0 Nos.
34.5	Double Face Sledge Hammer; weight 1500 ±50gm	4.0 Nos.
34.6	Double Face Sledge Hammer; weight 1200 ±50gm	10.0 Nos.
34.7	Double Face Sledge Hammer; weight 1000 ±50gm	4.0 Nos.
34.8	Joiners hammer, weight 500 ±50gm	10.0 Nos.
34.9	Engineers hammer-1; weight 900 ±50g	10.0 Nos.
34.10	Engineers hammer-2; weight 1200 ±50gm	10.0 Nos.
34.11	Engineers hammer-2; weight 650 ±50gm	4.0 Nos.
34.12	Engineers hammer-2; weight 400 ±50gm	4.0 Nos.
35	**Spanners**	
35.1	Double Open End Spanners set to suit bolt head having across flat in mm - Sizes: 6, 7, 8, 9, 10, 11, 12, 13, 14, 15, 16, 17, 18, 19, 20, 21, 22, 23, 24, 27, 28, 30, 32 mm.	6 sets

Sr. No.	Item Description	Quantity
35.2	Combination Spanners Set to suit bolt head having across flat in mm - Sizes - 6, 7, 8, 9, 10, 11, 12, 13,14, 15,16, 17, 18, 19, 20, 21, 22, 24, 26, 27, 28, 29, 30, 32, 34, 36, 41 mm	6 sets
35.3	Double Ended Ring Spanners set to suit bolt head having across flats. Sizes - 6, 7, 8, 9, 10, 11, 12, 13, 14, 15, 16, 17, 18, 19, 20, 21, 22, 24, 25, 27, 28, 30, 32, 36, 41, 46, 50, 55, 60 mm.	6 sets
35.4	Slogging open end Spanners Set to suit bolt head having across flats. Sizes in mm: 27, 30, 32, 36, 41, 46, 50, 55, 60, 65, 70, 75, 80, 85, 90.	4 sets
35.5	Slogging Ring Spanners Set to suit bolt head having across flats. Sizes in mm: 24, 27, 30, 32, 36, 41, 46, 50, 55, 60, 65, 70, 75, 80, 85.	4 sets
36	**Hexagon Impact Socket**	
36.1	1/4" square drive Metric Hexagon Impact Socket set contains following sizes to suit bolt head having across flat in mm: 6, 7, 8, 9, 10, 11, 12, 13,14mm.	6 sets
36.2	3/8" square drive Metric Hexagon Impact Socket set contains following sizes to suit bolt head having across flat in mm: 7, 8, 9, 10, 11, 12, 13, 14, 15, 16, 17, 18, 19, 20, 21, 22, 24 mm	4 sets
36.3	1/2" square drive metric hexagon Impact Socket Set contains following sizes to suit bolt head having across flat in mm: 10, 11, 12, 13, 14, 15, 16, 17, 18, 19, 21, 22, 23, 24, 27, 30, 32 mm	4 sets
36.4	1/2" square drive long reach pattern minimum 75mm length hexagon Impact Socket set contains following sizes to suit bolt head having across flat in mm: 10, 13,14,16, 17, 18, 19, 21, 22, 23, 24, 27 mm	4 sets
36.5	1" square drive metric hexagon Impact Sockets set contains following sizes to suit bolt head having across flat in mm:30, 32, 34, 36, 41, 46, 50, 55, 60, 65,7 0, 75, 80 mm	2 Sets
36.6	3/4" square drive metric hexagon Impact Socket set contains following sizes to suit bolt head having across flat in mm. Size - 17,18,19, 20,21,22,24,27,30, 32,33,34, 36, 38, 41 mm	4 sets
36.7	1-1/2" square drive metric hexagon Impact Sockets set contains following sizes to suit bolt head having across flat in mm: Size - 46, 50, 55, 60, 65, 70, 75, 80, 85, 90, 95, 100, 105, 110, 115,120 mm	2 sets
37	**Hexagon Allen Key/Key Wrenches for In-Hex screw, in Inches**	
37.1	Hexagon Allen key/ key wrenches for In-Hex screw in a set consists of following sizes 1/16'' - Minimum length 40 mm, 5/64" - Minimum length 40 mm 3/32" - Minimum length 40 mm 1/8" - Minimum length 40 mm	4 Sets

Sr. No.	Item Description	Quantity
	5/32" - Minimum length 50 mm, 3/16" Minimum length 50 mm, 7/32" -Minimum length 60 mm, 1/4"-Minimum length 70 mm, 5/16"-Minimum length 80 mm, 3/8"-Minimum length 100 mm, 1/2"-Minimum length 120 mm, 9/16"-Minimum length 120 mm, 5/8''-Minimulength 140 mm, 3/4'' Minimum length 180 mm	
37.2	Extra-long Hexagon Allen key for In Hex screw in a set Consists of following sizes - 1/16'' - Minimum length 70 mm, 5/64" - Minimum length 90 mm, 3/32" - Minimum length 100 mm, 1/8" - Minimum length 120 mm, 5/32" - Minimum length 130 mm, 3/16" - Minimum length 150 mm, 7/32" - Minimum length 170 mm, 1/4"- Minimum length 180 mm, 5/16"- Minimum length 180 mm, 3/8"- Minimum length 200 mm, 1/2"- Minimum length 225 mm, 9/16"- Minimum length 250 mm size	4 Sets
38	**Hexagon Allen key/Key Wrenches for In-Hex screw in mm**	
38.1	Hexagon Allen key / key wrenches in inches for In-Hex screw; in a set consists of following sizes & minimum lengths. 17mm - Minimum length 160 mm, 19mm - Minimum length 180 mm, 22mm - Minimum length 200 mm, 24mm - Minimum length 220 mm, 27mm - Minimum length 250 mm, 30 mm -Minimum length 300 mm, 32mm - Minimum length 320 mm	4 sets
38.2	Hexagon Allen key / key wrenches for In-Hex screw in a set consists of following sizes & lengths. 0.9mm -Minimum length 25 mm 1.5mm -Minimum length 30 mm 2.0 mm -Minimum length 40 mm, 2.5mm -Minimum length 40 mm, 3.0 mm -Minimum length 50 mm, 4.0 mm -Minimum length 50 mm,	4 sets

Sr. No.	Item Description	Quantity
	5.0 mm -Minimum length 70 mm, 6.0 mm -Minimum length 70 mm, 7.0 mm -Minimum length 80 mm, 8.0 mm-Minimum length 90 mm, 9.0 mm -Minimum length 90 mm, 10.0 mm -Minimum length 100 mm, 12.0 mm-Minimumlength100 mm 14.0 mm -Minimum length 120 mm.	
38.3	Extra-long Hexagon Allen key / key wrenches for In-Hex screw in a set consists of following sizes 1.5 mm -Minimum length 80 mm, 2.0 mm -Minimum length 80 mm, 2.5 mm -Minimum length 100 mm, 3.0 mm -Minimum length 100 mm, 4.0 mm -Minimum length 120 mm, 5.0 mm -Minimum length 120 mm, 6.0 mm -Minimum length 150 mm, 7.0 mm -Minimum length 150 mm, 8.0 mm -Minimum length 180 mm, 9.0 mm -Minimum length 180 mm, 10.0 mm -Minimum length 200 mm, 12.0 mm -Minimum length 200 mm, 14.0 mm -Minimum length 250 mm	4 sets
39	**Chisel/Punch/Files Sets**	
39.1	Flat cold chisel 10±2 mm width 100± 10 mm long	10.0 Nos.
39.2	Flat cold chisel 15±2 mm width 100± 10 mm long	10.0 Nos.
39.3	Flat cold chisel 20±2 mm width 100± 10 mm long	10.0 Nos.
39.4	Centre punch as per specification	10.0 Nos.
39.5	Double cut file Flat shape, one set consists of following sizes 10 mm wide × 100 mm long 15mm wide × 150 mm long 20 mm wide × 200 mm long	10 Sets
39.6	Double cut file square shape, one set consists of following sizes 6mm wide × 100 mm long 10 mm wide × 150 mm long 12mm wide × 200 mm long	10 Sets
39.7	Double cut file half round shape, one set consists of following sizes 12mm dia × 100 mm long 16mm dia × 150 mm long 20 mm dia × 200 mm long	10 Sets
39.8	Double cut file round shape, one set consists of following sizes	10 Sets

Sr. No.	Item Description	Quantity
	3.8mm dia × 100 mm long 5mm dia × 150 mm long 6.3mm dia × 200 mm long 7mm dia × 200 mm long 12mm dia × 300 mm long 16mm dia × 350 mm long	
40	**Bi-Hexagon Socket Set**	
40.1	1/2" square drive long reach of minimum 75mm length bi-hexagon Socket set contains following sizes to suit bolt head having across flat length 12, 13, 14, 15, 16, 17, 18, 19, 21, 22, 24, 27, 30, 32 mm	4 Sets
40.2	3/4" square drive metric bi-hexagon Socket set containing following sizes to suit bolt head having across flat length 22, 24, 27, 30, 32, 36, 38, 41mm	4 Sets
41	**Hexagon Socket Set**	4 Sets
41.1	1/2"square drive long reach of minimum 75mm length hexagon Socket set containing following sizes to suit bolt head having across flat length 12, 13, 14, 15, 16, 17, 18, 19, 21, 22, 24, 27, 30, 32mm	4 Sets
42	**Two-in-one Hexagon & Bi-Hexagon Socket Sets**	4 Sets
42.1	1/2" square drive metric hexagon Socket Set containing following sizes to suit bolt head having across flat length 8, 9, 10, 11, 12, 13, 14, 15, 16, 17, 18, 19, 20,21,22,23,24, 25,26, 27, 28, 29,30,32,34 mm	4 Sets
42.2	1/2" square drive metric bi-hexagon Socket set containing following sizes to suit bolt head having across flat length 8, 9, 10, 11, 12, 13, 14, 15, 16, 17, 18, 19, 20, 21, 22, 23, 24, 25, 26, 27, 28, 29, 30, 32,34 mm	4 Sets
43	**MAir Impact Wrenches**	
43.1	1" drive Air impact wrench as per Specification sheet above explained:	2.0 Nos.
43.2	3/4" drive Air impact wrench as per Specification sheet above explained:	2.0 Nos.
43.3	1/2" drive Air impact wrench as per Specification sheet above explained:	2.0 Nos.
44	**Manual Torque Wrenches**	
44.1	Manual Torque Wrenches of torque 3-14N-m	2.0 Nos.
44.2	Manual Torque Wrenches of torque 5-35 N-m	2.0 Nos.
44.3	Manual Torque Wrenches of torque 10-70 N-m	2.0 Nos.
44.4	Manual Torque Wrenches of torque 25-135 N-m	1.0 Nos.
44.5	Manual Torque Wrenches of torque 50-220 N-m	1.0 Nos.
44.6	Manual Torque Wrenches of torque 70-340 N-m	1.0 Nos.

Sr. No.	Item Description	Quantity
44.7	Manual Torque Wrenches of torque 135-540 N-m	1.0 Nos.
44.8	Manual Torque Wrenches of torque 200-815 N-m	1.0 Nos.
44.9	Manual Torque Wrenches of torque 475-1015 N-m	1.0 Nos.
45	**Adjustable Spanners & Pipe Wrenches**	
45.1	Adjustable Spanners 150long	10.0 Nos.
45.2	Adjustable Spanners 300long	10.0 Nos.
45.3	Pipe Wrenches 250 mm long	4.0 Nos.
45.4	Pipe Wrenches 350 mm long	4.0 Nos.
45	**Portable Power Tools**	
45.1	Battery operated cordless Hammer drill machine as per Specification given. Ref Make: Snap-On or equivalent.	2.0 Nos.
2	Portable electrical driven Hand drill machine with reverse rotation	12.0 Nos.
3	Portable electrical driven Cut of Saw	2.0 Nos.
4	Portable electrical driven Jig Saw	2.0 Nos.
5	Portable electrical driven Sabre Saw	2.0 Nos.
6	Portable electrical driven Hot air gun	10.0 Nos.
7	Portable electrical driven Polisher	3.0 Nos.
8	Inclinometer	2.0 Nos.
46	**Hydraulic Nut Splitter**	
1	Pneumatically actuated heavy duty Hydraulic Nut Splitter Assembly	1 Set
2	**Scissor Lift/Ladder**	
3	1-ton capacity Battery operated Scissor Lift/Ladder along manufacturers recommended accessories. (Bidder shall mention all offered accessories in compliance sheet)	1 Set
47	**Heavy duty Steel Racks/Personal Locker Cabins**	
1	Heavy duty steel rack having per shelf load capacity 500 kg or more is acceptable	20.0 Nos.
2	Heavy duty Personal Locker Cabin	5.0 Nos.
48	**Measuring Instruments**	
1	Dial Gauge Plunger, range- 0-5mm, LC 0.001mm	12.0 Nos.
2	Dial Gauge Plunger, range- 0-10 mm, LC 0.01mm	18.0 Nos.
3	Dial Gauge Plunger, range- 0-30 mm, LC 0.01mm	6.0 Nos.
4	Dial Gauge Back Plunger, 0-5mm, LC 0.01mm	6.0 Nos.
5	Dial Test Indicator Lever Type, 0-40 mm, Travel 0.8mm, LC 0.01mm	2.0 Nos.
6	Master Level Gauge (Sprit level), 150 mm, LC 0.02mm/m	2.0 Nos.
7	Micrometre Inside, Single Rod Type, 50-150 mm, LC 0.01mm	1.0 Nos.
8	Micrometre Inside, Extension Rod Type, 200-500 MM, LC 0.01mm	2.0 Nos.

Sr. No.	Item Description	Quantity
9	Micrometre Outside, 0-25mm, LC 0.01mm	3.0 Nos.
10	Micrometre Outside, 50-75mm, LC 0.01mm, Caliper Type	3.0 Nos.
11	Micrometre Outside, 75-100 mm, LC 0.01mm	2.0 Nos.
12	Micrometre Outside, 100-125mm, LC 0.01mm	2.0 Nos.
13	Micrometre Outside, 125-150 mm, LC 0.01mm	3.0 Nos.
14	Micrometre Outside, 150-175mm, LC 0.01mm	1.0 Nos.
15	Micrometre Outside, 150-300 mm, LC 0.01mm	3.0 Nos.
16	Micrometre Outside, 300-400 mm, LC 0.01mm	2.0 Nos.
17	Micrometre Depth Gauge, 0-12 Inch, LC 0.001 Inch	1.0 Nos.
18	Vernier Calliper, 0-150 mm, LC 0.02mm/0.001 INCH	2.0 Nos.
19	Vernier Calliper, 0-150 MM, LC 0.01mm, DIGITAL	5.0 Nos.
20	Vernier Calliper, 0-200 mm, DIGITAL LC 0.05mm	2.0 Nos.
21	Vernier Calliper, 0-300 mm, LC 0.01mm, DIGITAL	8.0 Nos.
22	Vernier Depth Gauge, 0-150 mm, LC 0.05mm	1.0 Nos.
23	Vernier Depth Gauge, 0-300 mm, LC 0.02mm	2.0 Nos.
24	Vernier Depth Gauge with Dial, 0-200 mm, LC 0.05mm	1.0 Nos.
25	Vernier Depth Gauge, 0-200 mm, LC 0.01mm, Digimatic	3.0 Nos.
26	Micrometre Outside, 175-200 mm, LC 0.01mm	3.0 Nos.
27	Micrometre Outside, 200-225mm, LC 0.01mm	2.0 Nos.
28	Vernier Depth Gauge, 0-300 mm, LC 0.01mm, Digimatic	3.0 Nos.
29	Bore Gauge with Dial, 18-35mm, LC 0.01mm	1.0 Nos.
30	Bore Gauge with Dial, 35-60 mm, LC 0.01mm	2.0 Nos.
	Bore Gauge with Dial, 50-150 mm, LC 0.01mm	1.0 Nos.
31	Deflection Gauge 0-4mm LC 0.01mm	2.0 Nos.
32	Screw Pitch Gauge, Inch, 4-42 TPI 55 Deg. (30 Leaves)	6.0 Nos.
33	Screw Pitch Gauge, Inch, 4-60 TPI 55 Deg. (28 Leaves)	6.0 Nos.
34	Screw Pitch Gauge, metric, 0.4-7mm Pitch 60 Deg. (18Leaves)	6.0 Nos.
35	Screw Pitch Gauge, Metric, 0.4-7mm Pitch, 60 Deg. MM (21 Leaves)	6.0 Nos.
36	Vernier Depth Gauge, 0-600 mm, LC 0.01mm, Digimatic	1.0 Nos.
37	Thickness/Feeler Gauge, 0.03-1mm (26leaves) Length 600 mm	3.0 Nos.
38	V-Block For Shaft Run Out Check	6.0 Nos.
39	Puppy Dial Gauge (small size dial) (1 MM) LC 0.01mm	3.0 Nos.
40	Dial Test Indicator Lever Type, 0.2 MM, LC 0.002mm	3.0 Nos.
41	Dial Test Indicator Lever Type, 0.06mm, LC0.002mm	3.0 Nos.
42	Micrometre Inside, Single Rod Type, 50-1500 mm, LC 0.01mm	2.0 Nos.
43	Micrometre Inside, Tubular, 50-500 mm, LC 0.01mm	3.0 Nos.

Sr. No.	Item Description	Quantity
44	Insize Screw Pitch Gauge, Metric, 2-20 mm pitch, TR 30 Deg. MM (12 Leaves)	5.0 Nos.
45	Insize Screw Pitch Gauge, Metric, 1-12 TPI, ACME 29 Deg. MM (16 Leaves)	5.0 Nos.
49	**Plug Gauges Go & No-Go**	
1	Ø18, Ø16, Ø12, Ø10, Ø9, Ø8, Ø6, Ø5.0, Ø4.0, Ø3.0, Ø2.0 and Ø1.0. One set consists of 12 numbers of plug gauges (go & no-go) of above sizes each	3 Sets
50	**Ring Gauges Go & No-Go**	
1	Ø18, Ø16, Ø12, Ø10, Ø9, Ø8, Ø6, Ø5.0, Ø4.0 Ø3.0, Ø2.0 and Ø1.0. One set consists of 12 numbers of plug gauges (go & no-go) of above sizes each	3 Sets
51	**Metric, Thread Plug Gauges and Thread Ring Gauges with tolerance class 6g (Go & No-Go Gauge). One set consists of 1 number of Thread Plug Gauges and 1 number of Thread Ring Gauges**	
1	M2 × 0.40	2 Sets
2	M2.5 × 0.45	2 Sets
3	M3 × 0.5	2 Sets
4	M4 × 0.7	2 Sets
5	M5 × 0.8	2 Sets
6	M7 × 1.0	2 Sets
7	M8 × 1.0	2 Sets
8	M8 × 1.25	2 Sets
9	M10 ×1.0	2 Sets
10	M10 ×1.25	2 Sets
11	M12 ×1.0	2 Sets
12	M12 ×1.25	2 Sets
13	M12 ×1.5	2 Sets
14	M12 ×1.75	2 Sets
15	M14 ×2.0	2 Sets
16	M14 ×1.5	2 Sets
17	M16 ×2.0	2 Sets
18	M16 ×1.5	2 Sets
19	M18 × 1.5	2 Sets
20	M20 ×2.5	2 Sets
21	M20 ×1.0	2 Sets
22	M24 ×3.0	2 Sets

Sr. No.	Item Description	Quantity
23	M24 ×2.0	2 Sets
52	**Adjustable Snap Gauges**	
1	Ø 0 to Ø 13	2.0 Nos.
2	Ø13 to Ø25	2.0 Nos.
3	Ø25 to Ø 38	2.0 Nos.
4	Ø38 to Ø51	2.0 Nos.
5	Ø51 to Ø 64	2.0 Nos.
53	**Cast Iron Surface Plate**	
1	Design, manufacturing, inspection, supply and installation of cast iron surface plate of size 2000 mm (Length) × 1000 mm (Width) × 200 mm (Height)	1.0 Nos.
2	Supply of Theodolites	2.0 Nos.
3	Supply, instillation and hands-on training of Optical Coordinate Measuring Machine (Optical CMM)	2.0 Nos.
54	**MMW submodule for Erection**	
1	Installation of High speed precision Lathe, (model NH22/2000) straight bed, A 2-6/53mm spindle nose, Gap Bed Along with std. Accessories, standard colour and full packing.	1 Set
2	Installation of High speed precision Lathe machine, (model NH32/3000) A2-8/80 mm with Induction hardened /Ground straight bed, Gap bed version in lieu of standard bed, along with std. accessories.	1 Set
3	Radial Drilling Machine (RM-65) with Standard accessories and standard colour.	1 Set
4	Installation of Knee Type Universal Manual Milling Machine in standard apple green colour with standard accessories which shall include Electrical equipment complete with wiring suitable for 415Volts, 50 cycles, 3 phase, 4 wire, AC supply, Draw bolt.	1 Set
5	Installation of Precision surface grinding machine (model 455H) in standard apple green colour and standard accessories as per details given in purchaser's technical specification.	1 Set
6	Installation of Hydraulic Power Hacksaw Machine as per details given in purchaser's technical specification.	1.0 Nos.
7	Installation of Shaping Machine with standard accessories as per purchaser's specification.	1 set
8	Hydraulic Press 50T Capacity along with necessary accessories recommended by manufacturer as per details given in purchaser's technical specification..	1 set
9	Double Ended Pedestal Grinder and its necessary accessories	1 set

Sr. No.	Item Description	Quantity
10	Bench Grinder of 200 mm size along with mounting frame, necessary accessories and anchor fasteners.	3set
11	Bench Drilling Machine and manufacturers recommended accessories.	2 sets
12	Installation and hands-on training of CNC Vertical Milling Machine with accessories mentioned in specification sheet.	1 Set
55	**M7-S2: BOQ for Electrical Maintenance Workshop**	
1	Over load relay test kit.	1.0 Nos.
2	Transformer Winding Resistance Meter	1.0 Nos.
3	Digital earth tester for automatic testing and measurement of earth resistance.	1.0 Nos.
4	Digital Micro-Ohmmeter	1.0 Nos.
5	Transformer oil BDV tester along with calibrator	1.0 Nos.
6	Thermography camera along with tele-photo infrared lens, wide-angle infrared lens and accessories	1.0 Nos.
7	Single phase relay test kit	2.0 Nos.
8	Battery internal resistance meter	2.0 Nos.
9	Circuit breaker vacuum bottle tester	1.0 Nos.
10	Three phase Power Quality Analyser	2.0 Nos.
11	Transformer oil sampling bottle, 2000 ml	10.0 Nos.
12	Transformer oil sampling bottle, 2500 ml	8.0 Nos.
13	High Speed recorder and its accessories as per the specification sheet	1.0 Nos.
	Aluminium Ladders/Platform	
14	Aluminium Wall Supporting Single Ladder	4.0 Nos.
15	Aluminium Folding Telescopic Ladder	1.0 Nos.
16	Aluminium Trolley Step ladder 6feet high	2.0 Nos.
17	Aluminium Trolley Step ladder 8feet high	2.0 Nos.
18	Hot Air Oven with inner chamber and outer chamber	1.0 Nos.
19	DC HiPoT Test Kit along with accessories as mentioned in specification sheet.	1.0 Nos.
20	100 KV AC HiPOT Test Kit along with accessories as mentioned in specification sheet.	1.0 Nos.
21	Two Step Ladder Stool	1.0 Nos.
22	Battery Discharge Test Kit	2.0 Nos.
57	**M7-S3: BOQ for Chemistry Control Lab (CCL)**	
1	Fourier Transform Infrared (FT-IR) Spectrometry System	2.0 Nos.
2	Gamma Spectrometry System	1.0 Nos.

Sr. No.	Item Description	Quantity
	Additional components required with Gamma Spectrometer	
3	FET	1.0 Nos.
4	Pre Amplifier	1.0 Nos.
5	Inductively Coupled Plasma Optical Emission Spectrometer (ICP-OES)	1.0 Nos.
	Additional components required with Gamma Spectrometer	
6	Regulator for Argon gas cylinder with gas tubing (10 meters)	1.0 Nos.
7	Exhaust hood for ICP system	1.0 Nos.
8	HF sample introduction system	1.0 Nos.
9	Multi element standard containing 100 ppm each of 21 elements (Al, Ag, As, Bi, Ca, Cd, Co, Cr, Cu, Fe, K, Li, Mg, Mn, Mo, Na, Ni, Pb, Sb, V, Zn.):	200 mL
10	High-Precision Refractometer	2.0 Nos.
11	Gas Chromatograph	2.0 Nos.
12	Ultra-Pure Water Generation System Type I	1.0 Nos.
13	Ultra-Pure Water Generation System Type II	1.0 Nos.
14	Flame Photometer:	1.0 Nos.
	Additional components required with Flame Photometer	
15	Fuse compatible with above flame photometer	10.0 Nos.
16	Atomizer (Nebulizer Assembly) compatible with above flame photometer	2.0 Nos.
17	Mixing chamber assembly with SS burner compatible with above flame photometer	2.0 Nos.
18	Nebulizer Inlet tube compatible with above flame photometer (Roll of 01 feet)	2.0 Nos.
19	Air compressor compatible with above flame photometer	4.0 Nos.
20	Plastic Beaker, Capacity 50 ml	10.0 Nos.
21	Dust cover for flame photometers	2.0 Nos.
22	Sample stand for above flame photometer	3.0 Nos.
23	Tube Braided Hosepipe for compressor	2.0 Nos.
24	Gas lighter	3.0 Nos.
25	Spanner suitable for above flame photometer	1.0 Nos.
26	Pressure regulator for above flame photometer	2.0 Nos.
27	Pressure gauge for above flame photometer	2.0 Nos.
28	Four Digit Balance: Microprocessor control based	2.0 Nos.
	Additional components required with Four Digit Balance	
29	Service manual along with electronic circuit diagram & troubleshooting	2.0 Nos.

Sr. No.	Item Description	Quantity
30	Instruction and operation manual	*
31	Power adapter compatible to above electronic balance	2.0 Nos.
32	Dust cover for above equipment	1.0 Nos.
33	Five Digit Balance: Microprocessor based, Bench top model with specifications as given above.	2.0 Nos.
	Additional components required with Five Digit Balance	
34	Operation and maintenance manual	2.0 Nos.
35	Power adapter compatible to above electronic balance:	2.0 Nos.
36	Pan Compatible with above Balance:	2.0 Nos.
37	Dust cover for above equipment:	1.0 Nos.
38	Bench-top High Temperature Laboratory Furnace: with silicon carbide heating elements, PID (Proportional Integral Derivative) controller, and door insulation.	1.0 Nos.
39	Over Temperature Protection compatible with above furnace.	1.0 Nos.
40	Bench Top Microprocessor control-based bench top pH meter with Digital Display Unit.	4.0 Nos.
	Additional components required with pH meter	
41	Adjustable Electrode Holding Stand	2.0 Nos.
42	pH Electrode triode with connector, compatible with above Item at Sr. No. 10	4.0 Nos.
43	Reference Electrode compatible with above Item at Sr. No. 10	2.0 Nos.
44	Temperature Probe compatible with above Item at Sr. No. 10	2.0 Nos.
45	Ag/Ag Cl reference electrode solution, 60 ml pack, and compatible with above Item at Sr. No. 10	4.0 Nos.
46	AC / DC adapter, compatible with above Item at Sr. No. 10	2.0 Nos.
47	Microprocessor control-based bench top specific conductivity meter with Digital Display Unit & specified numbers of standard accessories, including Temperature Sensor / Probe, Cell Stand / Clamp, Main Power Lead, and	4.0 Nos.
	Additional components required with specific conductivity meter	
48	Conductivity Cell, steel w Pt1000 C= 0.1, compatible to Item at Sr. no. 11.	2.0 Nos.
49	Conductivity standard100? S/cm of 500 mL, compatible to Item at Sr. no. 11.	2.0 Nos.
50	Bench Top Microprocessor Based Turbidity Meter with Digital Display Unit with three core cables of 5 meters length terminated in an Indian type plug.	4.0 Nos.
51	Microprocessor control-based Coulometer/ Turbidity Meter.	1.0 Nos.

Sr. No.	Item Description	Quantity
	Standard accessories required with the instrument:	
	Additional components required with Turbidity Meter	
52	Titration Vessel:	1.0 Nos.
53	Detector Electrode with Lead	1.0 Nos.
54	Generator Electrode (with Frit) with lead	1.0 Nos.
55	Desiccant Tube and Cap	1.0 Nos.
56	Injection Septa (Pack of 10)	1.0 Nos.
57	Gas Tight Syringe 1.0 ml	1.0 Nos.
58	Luer needle 17 gauge	1.0 Nos.
59	Thermal Paper Roll	2.0 Nos.
60	Funnel	1.0 Nos.
61	Desiccant (Pack of 500gm)	1.0 Nos.
62	Dust Cover	1.0 Nos.
63	Results Manager Software	1.0 Nos.
64	Main Power Pack	1.0 Nos.
65	Fuse	5.0 Nos.
66	KF Titration Reagent (s) (8x100 ml & 8x5ml)	2.0 Nos.
67	Calibration standard	2.0 Nos.
68	Digital Burette	4.0 Nos.
69	Electro Chemical based Sensor	1.0 Nos.
70	Optical Thermo luminescent based Sensor	1.0 Nos.
71	De-humidifier	2.0 Nos.
72	UV-Visible Double Beam Spectrophotometer	2.0 Nos.
73	1.5 Tons capacity Split Air Conditioners with invertors along with accessories, copper tubing, stand for outdoor units.	3 Sets
74	LED TVs of 49inches size along with stand for wall mount/table mount	1.0 Nos.
75	Double Sink with pedestal frame structure & faucets/supply & drain lines and drip cups. (Length of the pipes shall be as per the layout design). The size of working Table for basin and eye wash without any storage. Table Size 2.125m (L) x 900 mm (W) x 900 mm (H)	1 Set
76	Single Sink with pedestal frame structure & faucets/supply & drain lines and drip cups. (Length of the pipes shall be as per the layout design). The size of working Table for basin and eye wash without any storage. Table Size 1.48m (L) x 900 mm (W) x 900 mm (H)	1 Set
77	Ventilated chemical storage cabinet. Size 1.8m (L) x 0.6m (D) x H2.4m (H)	1.0 Nos.
78	Laboratory Stools with Back Rest	10.0 Nos.

Sr. No.	Item Description	Quantity
79	Laboratory chairs with high back	10.0 Nos.
80	Bookcase with Four Door	4.0 Nos.
81	Filling Cabinet with Three Drawer	4.0 Nos.
	Fume Hoods	
82	Walk-in Fume hood; Size 1500 mm W) x 1200 mm (D) x 2400 mm (H) Working depth >1000 mm	1.0 Nos.
83	Fume hood with base cabinet; Size 1500 mm (W) x 1200 mm (D) x 2400 mm (H) Working depth >1000 mm	4.0 Nos.
84	Ducting for fume hood	as per layout
85	Scrubber for two fume hoods	2.0 Nos.
86	Scrubber for walk-in fume hoods	1.0 Nos.
	Working Tables	
87	**Working Table with Storage rack (with elevation adjustment feature) and Under Bench Storage**: Table Size 3m (L) x 900 mm (W) x 900 mm (H)= Height adjustable rack size 3m (L) x 450 mm (W) x 750 mm (H) with maximum overall height up to 2.4m and Size 3.05m (L) x 900 mm (W) x working platform 900 mm (H) overall height with storage rack 2.4m	1 Set
88	**Working Table with Storage rack (with elevation adjustment feature) and Under Bench Storage:** Table Size 2.3m (L) x 900 mm (W) x 900 mm (H): Height adjustable rack size 3m (L) x 450 mm (W) x 750 mm (H) with maximum overall height up to 2.4m. Table Size 3.05m (L) x 900 mm (W) x working platform 900 mm (H) overall height with storage rack 2.4m	1 Set
89	**Instrumentation Table for Ion chromatograph with Storage rack (with elevation adjustment feature) and under bench movable storage**: Table Size 3.6m (L) x 900 mm (W) x 750 mm (H): Height adjustable rack 3.6m (L) x 450 mm (W) x 750 mm (H) with maximum overall height up to 2.4m, Movable storage racks-3nos	1 Set
90	**Instrumentation Table for Gas Chromatograph with Storage rack (with elevation adjustment feature) and under bench movable storage**: Table Size 2.4m (L) x 900 mm (W) x 750 mm (H): Height adjustable rack 2.4m (L) x 450 mm (W) x 750 mm (H) with maximum overall height up to 2.4m, Movable storage racks-2nos	1 Set
91	**Instrumentation/Chemist Table for with Storage rack (with elevation adjustment feature) and under bench movable storage**: Table Size 2.4m (L) x 900 mm (W) x 750 mm (H): Height adjustable rack 2.4m (L) x 450 mm (W) x 750 mm (H) with maximum overall height upto 2.4m. Movable storage racks-2nos	1 Set
92	**Instrumentation Table for FTIR with Storage rack (along with**	1 Set

Sr. No.	Item Description	Quantity
	elevation adjustment feature) and under bench movable storage: Table Size 4m (L) x 900 mm (W) x 750 mm (H): Height adjustable rack 4m (L) x 450 mm (W) x 750 mm (H) with maximum overall height upto 2.4m. Movable storage racks-3nos	
93	**Instrumentation Table for equipment with Storage rack (along with elevation adjustment feature) and under bench movable storage:** Table Size 4m (L) x 900 mm (W) x 750 mm (H): Height adjustable rack 4m (L) x 450 mm (W) x 750 mm (H) with maximum overall height upto 2.4m. Movable storage racks-3nos	1 Set
94	**Instrumentation Table for ICP-OES with Storage rack (along with elevation adjustment feature) and under bench movable storage:** Table Size 4.2m (L) x 900 mm (W) x 750 mm (H): Height adjustable rack 4.2m (L) x 450 mm (W) x 750 mm (H) with maximum overall height upto 2.4m. Movable storage racks-3nos	1 Set
95	**Instrumentation Table in Cabin-2 with under bench movable storage**: Table Size 3.25m (L) x 900 mm (W) x 750 mm (H): Fixed or Movable storage with 3 Nos. of racks	1 Set
96	**Island Table for Lab-1 with above platform Storage rack (fixed type) and under bench movable storage (as per layout):** Table Size 3.5m (L) x 975mm (W) x 750 mm (H). Fixed rack 3.5m (L) x 300 mm (W) x 450 mm (H) with lower elevation 500 mm above platform. Fixed or Movable storage with 3 Nos. of racks	1 Set
97	Glass panelling in Aluminium Frames	Total = 85 sqm.
98	Doors in Aluminium frame of size 950 mm x 2150 mm	4.0 Nos.
	Erected at site covered under CCL Submodule (S3)	
99	LED TVs of 49inches size along with stand	1.0 Nos.
100	Double Sink with pedestal frame structure & faucets/supply & drain lines and drip cups. Provision of basin and eye wash without any storage.	1 set
101	Single Sink with pedestal frame structure & faucets/supply & drain lines and drip cups. Provision of basin and eye wash without any storage.	1 set
102	Ventilated chemical storage cabinet.	1.0 Nos.
103	1.5 Tons capacity Split Air Conditioners with invertors along with accessories, copper tubing, stand for outdoor units.	3.0 Nos.
	Fume Hoods	
104	Walk-in Fume hood; Size 1500 mm x 1200 mm x 2400 mm	1.0 Nos.
105	Fume hood with base cabinet; Size 1500 mm x 1200 mm x 2400 mm	4.0 Nos.

Sr. No.	Item Description	Quantity
106	Ducting for fume hood	as per layout
107	Scrubber for two fume hoods	2.0 Nos.
108	Scrubber for walk-in fume hoods	1.0 Nos.
	Working Tables	
109	**Working Table with Storage rack (with elevation adjustment feature) and Under Bench Storage:** Height adjustable rack size: Table Size 3m (L) x 900 mm (W) x 900 mm (H)	1 Set
110	**Working Table with Storage rack (with elevation adjustment feature) and Under Bench Storage** with Height adjustable rack: Table Size 2.3m (L) x 900 mm (W) x 900 mm (H)	1 Set
111	**Instrumentation Table for Ion chromatograph with Storage rack (with elevation adjustment feature) and under bench movable storage with Height adjustable rack**: Table Size 3.6m (L) x 900 mm (W) x 750 mm (H). Movable storage racks-3nos	1 Set
112	**Instrumentation Table for Gas Chromatograph with Storage rack (with elevation adjustment feature) and under bench movable storage with Height adjustable rack**: Table Size 2.4m (L) x 900 mm (W) x 750 mm (H). Movable storage racks-2nos	1 Set
113	**Instrumentation/Chemist Table for with Storage rack (with elevation adjustment feature) and under bench movable storage and Height adjustable rack:** Table Size 2.4m (L) x 900 mm (W) x 750 mm (H). Movable storage racks-2nos	1 Set
114	**Instrumentation Table for FTIR with Storage rack (along with elevation adjustment feature) and under bench movable storage and with Height adjustable rack:** Table Size 4m (L) x 900 mm (W) x 750 mm (H). Movable storage racks-3nos	1 Set
115	**Instrumentation Table for equipment with Storage rack (along with elevation adjustment feature) and under bench movable storage and with Height adjustable rack:** Table Size 4m (L) x 900 mm (W) x 750 mm (H). Movable storage racks-3nos	1 Set
116	**Instrumentation Table for ICP-OES with Storage rack (along with elevation adjustment feature) and under bench movable storage and with Height adjustable rack**: Table Size 4.2m (L) x 900 mm (W) x 750 mm (H). Movable storage racks-3nos	1 Set
117	**Instrumentation Table in Cabin-2 with under bench movable storage:** Table Size 3.25m (L) x 900 mm (W) x 750 mm (H) with Fixed or Movable storage racks-3nos	1 Set
118	**Island Table for Lab-1 with above platform Storage rack (fixed type) and under bench movable storage (as per layout) with fixed rack**: Table Size 3.5m (L) x 975mm (W) x 750 mm (H). Fixed or Movable storage racks-3nos	1 Set

Sr. No.	Item Description	Quantity
	M7-S4: BOQ for Radiological Hazard Control (RHC) Labs	
	Instruments to be supply under Submodule-S4 (RHC Lab)	
1	Extendable Telescopic arm type Wide Range Digital Scale Radiation Survey Meter (Teletector)	10.0 Nos.
2	Neutron Monitor	2.0 Nos.
3	Radiation Survey Meter	10.0 Nos.
4	Gross Beta Contamination Monitor	5.0 Nos.
5	Gross Alpha Contamination Monitor	5.0 Nos.
6	Gross AlphBeta Contamination Monitor (Como)	5.0 Nos.
7	Beta Contamination Monitor-Frisker	5.0 Nos.
8	Battery Operated Hand-Held Portable Air Sampler	5.0 Nos.
9	Alpha Counting System	4.0 Nos.
10	Beta Counting System with Lead Shielding	4.0 Nos.
11	Multi-vial Liquid Schintillation Counting System	1.0 Nos.
12	Quartz Fiber Direct Reading Pocket Dosimeters with 02 no. of chargers	25.0 Nos.
13	End Window GM Detector	10.0 Nos.
14	Portable Gamma Spectrometer	2.0 Nos.
15	Hand and Foot Contamination Monitor	5.0 Nos.
16	TLD dispensing system as per the above specification.	1.0 Nos.
17	Spare TLD personaliser	2.0 Nos.
18	Spare ID card personaliser	2.0 Nos.
19	Spare User console module	2.0 Nos.
20	Spare TLD holding Module	2.0 Nos.
21	Spare battery powered Emergency release tool	2.0 Nos.
22	Spare battery backed power supply unit	2.0 Nos.
23	Spare Ethernet Switch 8-port	2.0 Nos.
24	Half Face Mask Respirators with twin filter cartridge (Combo Respirators)	50.0 Nos.
25	Plastic Suits with Detachable Hood	30.0 Nos.
26	Disposable Suits	30.0 Nos.
27	Half Face Mask Respirator with Tritium Cartridges	50.0 Nos.
28	Personal Electronic Radiation Dosimeter (Along with three USB dosimeter reader and a Reader software)	30.0 Nos.
29	Portable single vial Liquid Scintillation Counter (LSC)	1.0 Nos.
30	LED TVs of 49 inches size	3.0 Nos.
	BOQ of the RHC Lab Furniture	

Sr. No.	Item Description	Quantity
31	**Working Table-1:** Size (L x W x H) 2500 mm x 500 mm x 750 mm	1.0 Nos.
32	**Working Table-2:** Size (L x W x H) 1800 mm x 700 mm x 750 mm	1.0 Nos.
33	**Working Table-3:** Size (L x W x H) 2440 mm x 700 mm x 800 mm	1.0 Nos.
34	**PPE Cupboard-1: Siz**e: (L x W x H) 900 mm x 600 mm x 2000 mm	2.0 Nos.
35	**PPE Cupboard-2: Size:** (L x W x H) 2200 mm x 750 mm x 800 mm	1.0 Nos.
36	**TLD Issue Counter Table:** Size: (Lx W x H) 2200 mm x 450 mm x 900 mm	1.0 Nos.
37	**Laboratory Cubicles: (**Each set consists of cubicles walls, table, Storage, Metal Keyboard Tray, CPU metal telescopic station Numbers). Size as per the tentative layout.	4.0 Nos.
38	**Wash Basin Sink**	1.0 Nos.
39	**Shift HP Table-1:** Size (L x W x H) (1840 mm x 700 mm x 750 mm)	1.0 Nos.
40	**Shift HP Table-2:** Size (L x W x H) (900 mm x 600 mm x 750 mm)	1.0 Nos.
41	High Back Revolving Chairs	4.0 Nos.
42	Laboratory Chairs	10.0 Nos.
43	Fume hoods as per specification	2.0 Nos.
44	Ducting of Fume Hoods	as per layout
	RHC Lab Items to be erected at site	
45	**Working Table-1:** Size (L x W x H) 2500 mm x 500 mm x 750 mm	1.0 Nos.
46	**Working Table-2:** Size (L x W x H) 1800 mm x 700 mm x 750 mm	1.0 Nos.
47	**Working Table-3:** Size (L x W x H) 2440 mm x 700 mm x 800 mm	1.0 Nos.
48	**PPE Cupboard-1:** Size: (L x W x H) 900 mm x 600 mm x 2000 mm	2.0 Nos.
49	**PPE Cupboard-2:** Size: (L x W x H) 2400 mm x 750 mm x 800 mm	1.0 Nos.
50	**TLD Issue Counter Table:** Size: (L x W x H) 2200 mm x 450 mm x 900 mm:	1.0 Nos.
51	**Laboratory Cubicles:** (Each set consists of cubicles walls, table, Storage, Metal Keyboard Tray, CPU metal telescopic station Numbers).	4.0 Nos.
52	**Wash Basin Sink** along with water supply line and drain line	1.0 Nos.
53	**Shift HP Table-1:** Size (L x W x H) (1840 mm x 700 mm x 750 mm)	1.0 Nos.
54	**Shift HP Table-2:** Size (L x W x H) (900 mm x 600 mm x 750 mm)	1.0 Nos.
55	Fume hoods along with their ducting	2.0 Nos.
	M7-S5: BOQ for Furniture Supplies and Erection	
	Furniture supply items under Submodule-S5 (FSE)	
1	Supply and Erection of Helmet Rack Stand for Reactor Building entrance and workshop locations inside operating island of HFRR project.	2.0 Nos.
2	Industrial Safety Helmet (colours shall be finalised by purchaser at	(a) 50 and

Sr. No.	Item Description	Quantity
	the time of sub-contracting or before supply). (a) First Lot of supply (Before start of Excavation), (b) Second Lot of supply (Before start of project commissioning)	(b) 100
3	Work Bench-1 of size: 1800 (W) x 850 mm (D) x 1600 mm (H) of 200kg load capacity.	8.0 Nos.
4	Work Bench-2 of size: 1800 (W) x 850 mm (D) x 900 mm (H) of 200kg load capacity.	4.0 Nos.
5	Work Bench-3 of size: 1800 (W) x 850 mm (D) x 900 mm (H) of 700kg load capacity.	3.0 Nos.
6	Industrial pigeonhole locker cabinet with door locking facility with dimensions: Height of dressers: 1800, Width of dressers: 910, Depth of dressers: 480.	30.0 Nos.
7	Steel Almira with 4 shelves making 5 compartments with dimensions: Height: 1855, Width: 1025mm, Depth: 485. It shall be provided with locks.	25.0 Nos.
8	Filing Cabinet with 4 numbers of drawers with dimensions: Height: 130, Width: 475, Depth: 600	20.0 Nos.
9	Supply and installation of Floor Mounted Auditorium Chairs.	160.0 Nos.
10	Wooden Podium Tables for Auditorium.	3.0 Nos.
11	Wall Area for Acoustic Ceiling & Wall Panelling for Auditorium.	as per layout
12	Carpet (Tufted/Needle-punched/Nylon Loop Pile) floor area as per architectural drawings	as per layout
13	Acoustic Wall Panelling, 50 mm thick glass wool core (NRC ? 0.75), finished with fire-retardant acoustic fabric over hardwood/ aluminium frame. (area as per architectural drawings)	as per layout
14	Single seater sofas	5.0 Nos.
15	Double Seater Sofas	5.0 Nos.
16	Three Seater Sofas	5.0 Nos.
17	Supply of Office Executive Tables with One Side Storage.	40.0 Nos.
18	Supply of Office Executive Tables with Two Side Storage.	20.0 Nos.
19	Supply of Computer Table as per specification	20.0 Nos.
20	Supply of L-Shape Modular Office Executive Table as per the specification	12.0 Nos.
21	Supply of Canteen Tables (6-Seater) as per the specification of size L-1600 mm × W-900 mm × H-750 mm (±5%)	10.0 Nos.
22	Supply of Canteen Chairs of size 623W x 558D x 450 mm (±5%) as per the specification	70.0 Nos.
23	Supply of Canteen Serving Tables of size 1180W x 558D x 450 mm (+10% -5%) as per the specification.	4.0 Nos.

Sr. No.	Item Description	Quantity
24	Conference Room Table (20 seater) as per specification	1.0 Nos.
25	Meeting Table (12 seater) as per specification	1.0 Nos.
26	Conference Room Chairs with High Back and Adjustable Headrest Black as per specification	100.0 Nos.
27	Wall ceiling Panelling Area of Conference & Meeting Rooms	600 sqm.
28	55inch LED TV	4.0 Nos.
29	HOD Chairs with high back with leatherite Upholstery	10.0 Nos.
30	L-Shaped Executive Cabin Desk (Division Head Cabin) with Side Storage dimensions L shape 1800 mm ×2400 mm, height 7500, depth 750-900 mm.	3.0 Nos.
31	Full Height Wall-Office Storage Cabinet (H2000nm × W2200 mm depth 400 mm) for Head of Division Rooms	3.0 Nos.
32	Meeting Tables for Division Head Rooms with Length 2000 mm × Width1200 mm × Height 750 mm	3.0 Nos.
33	Coffee Tables for Head of Division Rooms with dimensions as L1000 mm × Width 650 mm and Height 450 mm	5.0 Nos.
34	Low Back Chair with Arms and Plastic Outer Cover (front chairs); Width - 660 mm, Depth - 620 mm, Height - 1070 mm	40.0 Nos.
35	Office Executive Full Back Office Chairs (for senior officers); Length (760 ±10 mm), Width (760 ±10 mm), Height (1400±50 mm)	40.0 Nos.
36	L-Shaped Office Table with Storage for Division Head PA and APOs with dimensions (mm)- 1500L × 600W × 750H	5.0 Nos.
	Furniture for Workstation Cubicles	
37	Cubicles Workstation Cubicles of size 2.2m × 2.2m and 1.8m × 1.8m as per specification and height 1350 mm	85.0 Nos.
38	Free standing Pedestals/Drawer Units on wheels	85.0 Nos.
39	CPU Trolleys	150.0 Nos.
40	Metal Key Board Pull-out Tray with Mouse Trays	85.0 Nos.
41	High Back Revolving Chairs for Cubicles with dimensions 76 ±1cm (W) x 76 ±1cm (H) x 100-110cm (H).	95.0 Nos.
42	Wall Cabinets (Over Head Storage Units) of size 900 mm	85.0 Nos.
43	Fixed Racks for Workstations of depth 650 mm width 400-450 mm height 1300 mm (±5%)	85.0 Nos.
44	Movable Metal Pedestal/ Drawer for Workstations of depth 650 mm width 400-450 mm height 700 mm (±5%)	85.0 Nos.
45	Wire/electrical units (one unit consists wires, 3 sockets and a LAN port)	85.0 Nos.
46	Wall Area for Acoustic Slats Wall Panelling	as per layout
47	Area of walls for office rooms Slats wall Panelling	1400 sqm.

Sr. No.	Item Description	Quantity
	Erected at site under FSE, Submodule (S5)	
48	Supply and Erection of Helmet Rack Stand for Reactor Building entrance and workshop locations inside operating island of HFRR project.	2.0 Nos.
49	Work Bench-1 of size: 1800 (W) x 850 mm (D) x 1600 mm (H) of 200kg load capacity.	8.0 Nos.
50	Work Bench-2 of size: 1800 (W) x 850 mm (D) x 900 mm (H) of 200kg load capacity.	4.0 Nos.
51	Work Bench-3 of size: 1800 (W) x 850 mm (D) x 900 mm (H) of 700kg load capacity.	3.0 Nos.
52	Supply and installation of Floor Mounted Auditorium Chairs.	160.0 Nos.
53	Supply and installation of Acoustic Wall Panelling for Auditorium (Wall Area).	as per layout
54	Conference Room Table	1.0 Nos.
55	Meeting Table	1.0 Nos.
56	Supply and installation of wall Panelling Area of Conference & Meeting Rooms (Wall Area)	350 sqm.
57	L-Shaped Executive Cabin Desk (Division Head Cabin) with Side Storage	3.0 Nos.
58	Full Height Wall-Office Storage Cabinet for Head of Division Rooms	3.0 Nos.
	Furniture for Workstation Cubicles	
59	Cubicles Workstation Cubicles of size as per specification and height 1350 mm	85.0 Nos.
60	Free standing Pedestals/Drawer Units on wheels	85.0 Nos.
61	Metal Key Board Pull-out Tray with Mouse Trays	85.0 Nos.
62	Wall Cabinets (Over Head Storage Units) of size 900 mm	85.0 Nos.
63	Fixed Racks for Workstations	85.0 Nos.
64	Movable Metal Pedestal/ Drawer for Workstations	85.0 Nos.
65	Wire/electrical units (one unit consists wires, 3 sockets and a LAN port)	85.0 Nos.
66	Area of walls for office rooms Slats wall Panelling	1400 sqm.
	M7-S6: Process Instrumentation Lab	
1	Calibration Work Bench (2m (w) x 1.6 m (h) x 0.85 m (d)) with ventilation, bench earthing, electronics earthing, anti-static matting, internal illumination, 1 x 3 drawer storage unit,	2.0 Nos.
2	Pneumatic Dead Weight Tester (0-7 kg/cm2)	1.0 Nos.
3	Precision Multi-function calibrator: (a) Signal Sourcing: DC Voltage, DC Current, Resistance, RTD, Thermocouple, Frequency & Pulses. (b) Signal Measuring: AC/DC Voltage, AC/ DC Current, Resistance,	3.0 Nos.

Sr. No.	Item Description	Quantity
	RTD, Thermocouple, Frequency & Pulses	
4	Precision Digital Multimeter: Measurement of AC/DC Voltage & current, Resistance & Continuity, Capacitance, RTD, Thermocouple, Frequency,	2.0 Nos.
5	Pneumatic Pressure Regulator Valve with Filter (0-7 kg/cm2)	1.0 Nos.
6	Inclined Tube Manometer (0-250 mmWC)	1.0 Nos.
7	Low Pressure Hand Pump (-0.4 to 0.4 kg/cm2)	1.0 Nos.
8	High Pressure Hand Pump (0 to 220 kg/cm2)	1.0 Nos.
9	Pneumatic Pressure Regulator Valve with Filter (0-250 mmWC)	1.0 Nos.
10	Precision Digital Pressure Gauge (0-1 bar (g))	1.0 Nos.
11	Precision Digital Pressure Gauge (0-7 bar (g))	1.0 Nos.
12	Precision Digital Pressure Gauge (0-30 bar (g))	1.0 Nos.
13	Precision Digital Pressure Gauge (0-70 bar (g))	1.0 Nos.
14	Precision Digital Pressure Gauge (0-220 bar (g))	1.0 Nos.
15	Power Supply 24 VDC 5A (Fixed)	1.0 Nos.
16	Variable Power Supply 0- 110 VDC, 0-10A for constant Voltage and Constant current operation	1.0 Nos.
17	Portable Dry Block Temperature Calibrator with in-built Temperature Controller, readout and standard PRT (range: 0- 660 oC)	1.0 Nos.
18	PC with Printer	2.0 Nos.
19	Accessories: (a) 230 VAC distribution plug points (6 nos. per calibration work bench). (b) High Power LED track-light fixtures with lamp (2 nos. per calibration work bench.)	1 Set
	M7-S7: Nuclear Instrumentation & Electronics Lab	
	Not in the scope of EPC document (It will be FIM)	
	M7-S8: Technical Specification for Erection, Commissioning of Labs & Workshop Equipment	
	No BOQ is required	
	M7-S9: Technical Specification for Workshop & Stores Material Handling Equipment	
	Electric Overhead Travelling (EOT) Crane for MMW	
1	Supply of Electric Over Head Crane of 10Tones capacity of Main Hoist & 52Tonnes of Aux. Hoist capacity with span of around 13.5m, bay length of around 35.5m and Hoisting height of around 11m as per the specification.	1.0 Nos.
2	Brakes Lining for Main Hoist & Auxiliary Hoist	3 Pairs
3	Brakes Lining for Cross travel	3 Pairs
4	Brakes Lining for Long Travel	3 Pairs

Sr. No.	Item Description	Quantity
5	Bearings For each motor for all motions	1 Set
6	Bearings Main Hoist Gearbox & Auxiliary Hoist	1 Set
7	Bearings Cross Travel Gearbox	1 Set
8	Bearings Long Travel Gearbox	1 Set
9	Bearings Cross Travel Wheels	1 Set
10	Bearings Long Travel Wheels	1 Set
11	Oil Seals for Gear Couplings	2 Set
12	Oil Seals for Main Hoist gear box & Auxiliary Hoist	2 Set
13	Oil Seals for Cross travel gear box	2 Set
14	Oil Seals for Long travel gear box	2 Set
15	Brake Spring for Main Hoist & Auxiliary Hoist	1 Pairs
16	Brake Spring for Cross Travel Unit	1 Pairs
17	Brake Spring for Long Travel Unit	1 Pairs
18	O Ring for Main Hoist & Auxiliary Hoist	2 Set
19	O Ring for Cross Travel Unit	2 Set
20	O Ring for Long Travel Unit	2 Set
21	Bearing Seal for Main Hoist & Auxiliary Hoist	2 Set
22	Bearing Seal for Cross Travel Unit	2 Set
23	Bearing Seal for Long Travel Unit	2 Set
24	Power and Control PCB Cards	1 Set each drive
25	Push Button	10% of total Qty.
26	Current collector of DSL	One per each size
27	Control Card for VVVF drive	1 No. each type
28	Power Card & Intelligent Power Module for VVVF drive	1 No. for main hoist drive
29	Feedback encoder and encoder card for VVVF drive	1 No. each type
30	Braking Unit for VVVF drive	1 No. for main hoist drives
	Electric Manual Chain Hoists for MMW Workshop & Stores	
1	Supply of Electrical/Manual Chain Hoists for stores of 5Tones hoisting capacity and 10Te capacity of beam runways with manual	1 set

Sr. No.	Item Description	Quantity
	winching facility, monorail length 80 m and Hoisting height of around 3 to 4m (as per the layout).	
2	Supply of Electrical Chain Hoists for piping shop of MMW Workshop of 2Tones capacity (both hoist and monorail), monorail length 18m and Hoisting height of around 3 to 4m (as per the layout).	1 set
3	Supply of Electrical Chain Hoists for Machine Shop of MMW Workshop of 2Tones capacity (both hoist and monorail), monorail length 26m and Hoisting height of around 3 to 4m (as per the layout).	1 set
4	Supply of Manual Chain Hoists for Instrumentation Lab of 1Tones capacity (both hoist and monorail), monorail Length approx.imate 12m and Hoisting height of around 8 to 9m (as per the layout).	1 set
5	Brakes Lining	3 Pairs (wherever applicable)
6	Bearings For each motor for all motions	1 Set
7	Bearings for Gearbox	1 Set
8	Power and Control PCB Cards	1 Set each drive
9	Push Button	10% of total Qty.
10	Current collector of DSL	One per each size
11	Complete set of Ring spanner	1 Set
12	Complete set of screw driver (Min-6)	1 Set
13	Complete set of Pliers (insulated)	1 Set
14	Complete set of Adjustable wrench	1 Set
15	Hand operated grease gun	2.0 Nos.
16	Line tester	1.0 Nos.
17	Modular Tool box fabricated from metal sheet	1.0 Nos.
18	Screw Jack of suitable capacity	1.0 Nos.
19	Oil can	1 Set
20	Hammer- 2 lbs	1.0 Nos.
21	Allen key required sizes	1 Set
22	Hydraulic Jack	1.0 Nos.
3669	**Total number of different line items in this document**	